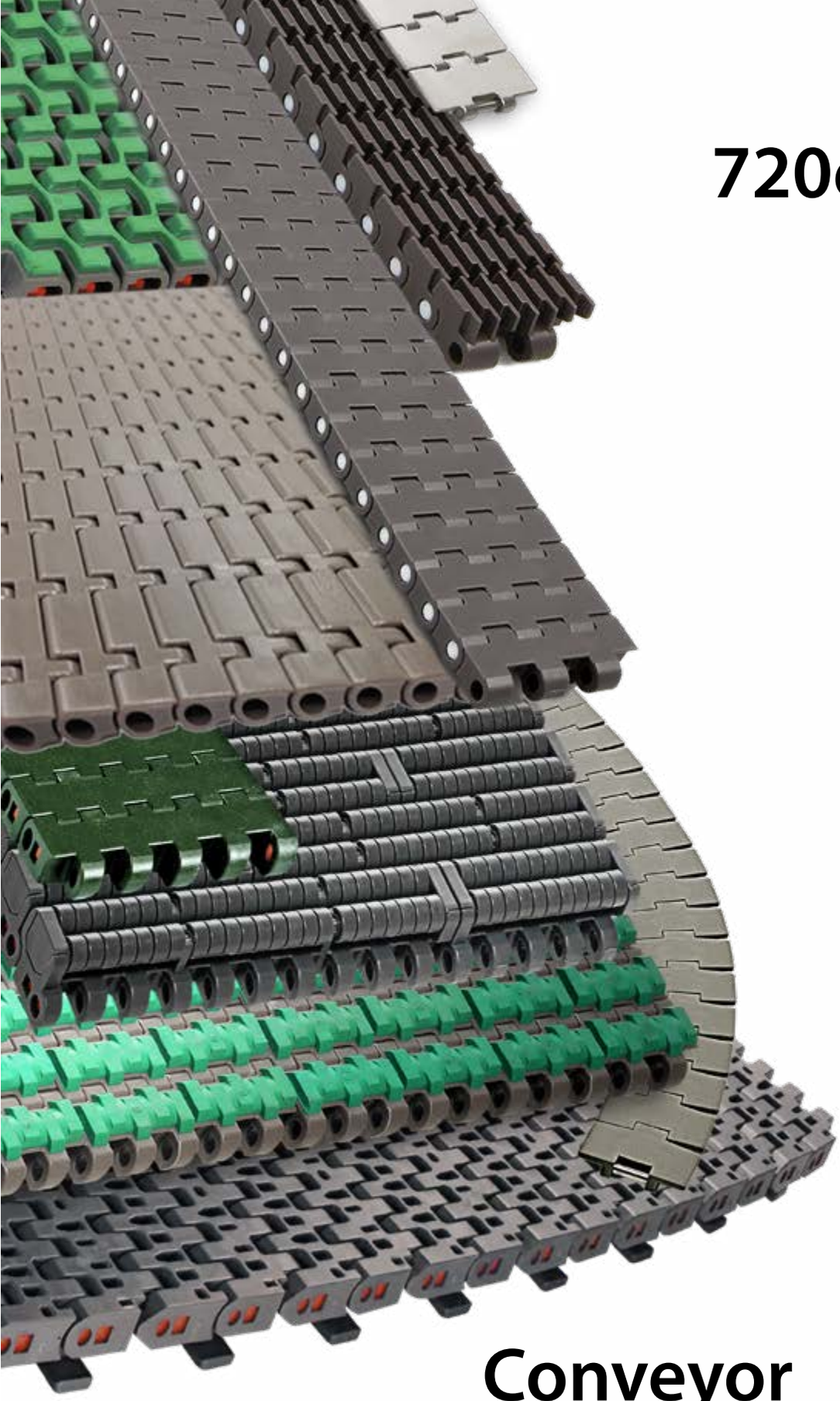

720e

Conveyor General Catalogue

REGINA CHAIN

PERFORMANCE IN MOTION

Copyright Regina Catene Calibrate S.p.A. - 2020
All images, products, decorations, texts, signs of this catalog and their graphic layout are exclusive industrial and intellectual property of Regina Catene Calibrate S.p.A.; it is therefore forbidden the reproduction and / or unauthorized use at any title or reason and in any form.
The content of this brochure is only intended to provide general information and of commercial nature, and it may, at any time, be subject to change at the discretion of Regina Catene Calibrate Spa. Despite all the information has been checked for accuracy and completeness, they may contain errors or inaccuracies in some cases, also due to the continuous updating of production. Therefore, Regina Catene Calibrate S.p.A. cannot be held liable for material or immaterial damages in any way arising from inaccurate or incorrect information contained in this catalog.

DNV·GL

MANAGEMENT SYSTEM CERTIFICATE

Certificato no./Certificate No.:	Data prima emissione/Initial date:	Validità:/Valid:
CERT-00105-96-AQ-MIL-SINCERT	14 settembre 1993	05 dicembre 2018 - 05 dicembre 2021

Si certifica che il sistema di gestione di/This is to certify that the management system of

REGINA CATENE CALIBRATE S.p.A. - Sede

Via Monza, 90 - 23870 Cernusco Lombardone (LC) - Italy
e i siti come elencati nell'Appendix che accompagna questo certificato / and the sites as mentioned in the appendix accompanying this certificate

È conforme ai requisiti della norma per il Sistema di Gestione Qualità/
has been found to conform to the Quality Management System standard:

ISO 9001:2015

Questa certificazione è valida
per il seguente campo applicativo:

Progettazione, produzione, assistenza pre e post vendita di catene industriali normalizzate e speciali, di catene per applicazioni motociclistiche e motoristiche. Produzione di trafilati e laminati in acciaio (EA 17, 14)

This certificate is valid
for the following scope:

Design, manufacture, pre and after-sale servicing of standardized and special industrial chains, chains for motorcycle and engine applications. Manufacture of drawn steel wire and flattened wire strips (EA 17, 14)

Luogo e Data/Place and date:
Vimercate (MB), 20 novembre 2018

ACCREDIA
L'ENTE ITALIANO DI ACCREDITAMENTO

SGQ N° 003 A
SGA N° 003 D
SGE N° 007 M
SCR N° 004 F
EPRS N° 009 P
PRD N° 003 B
PRS N° 094 C
SSI N° 002 G

Membro di MLA EA per gli schemi di accreditamento SGQ, SGA, PRD, PRS, ISP, GHG, LAB e LAT, di MLA IAF per gli schemi di accreditamento SGQ, SGA, SSI, FSM e PRD e di MRA ILAC per gli schemi di accreditamento LAB, MED, LAT e ISP

Per l'Organismo di Certificazione/
For the Certification Body
DNV GL – Business Assurance
Via Energy Park, 14 - 20871 Vimercate (MB) - Italy

Zeno Beltrami
Management Representative

La validità del presente Certificato è subordinata al rispetto delle condizioni contenute nel Contratto di Certificazione/
Lack of fulfilment of conditions as set out in the Certification Agreement may render this Certificate invalid.
DNV GL Business Assurance Italia S.r.l., Via Energy Park, 14 - 20871 Vimercate (MB) - Italy. TEL:039 68 99 905. www.dnvgl.it

PERFORMANCE IN MOTION

Since 1919

REGINA offers a vanguard and complete product portfolio of conveyor chains, belts and components, made of a wide range of top tier engineered plastics and steel grades, and available in metric and imperial standards. Our products are a top quality solution for the beverage, packaging and glass industries and for many more applications.
We strongly believe in R&D and heavily invest in our factories, where we manufacture all the products we sell. We operate worldwide through a fully owned subsidiaries network with strong local technical knowledge and a large stock.
Established in 1919, REGINA is now owned by the same family since 4 generations.

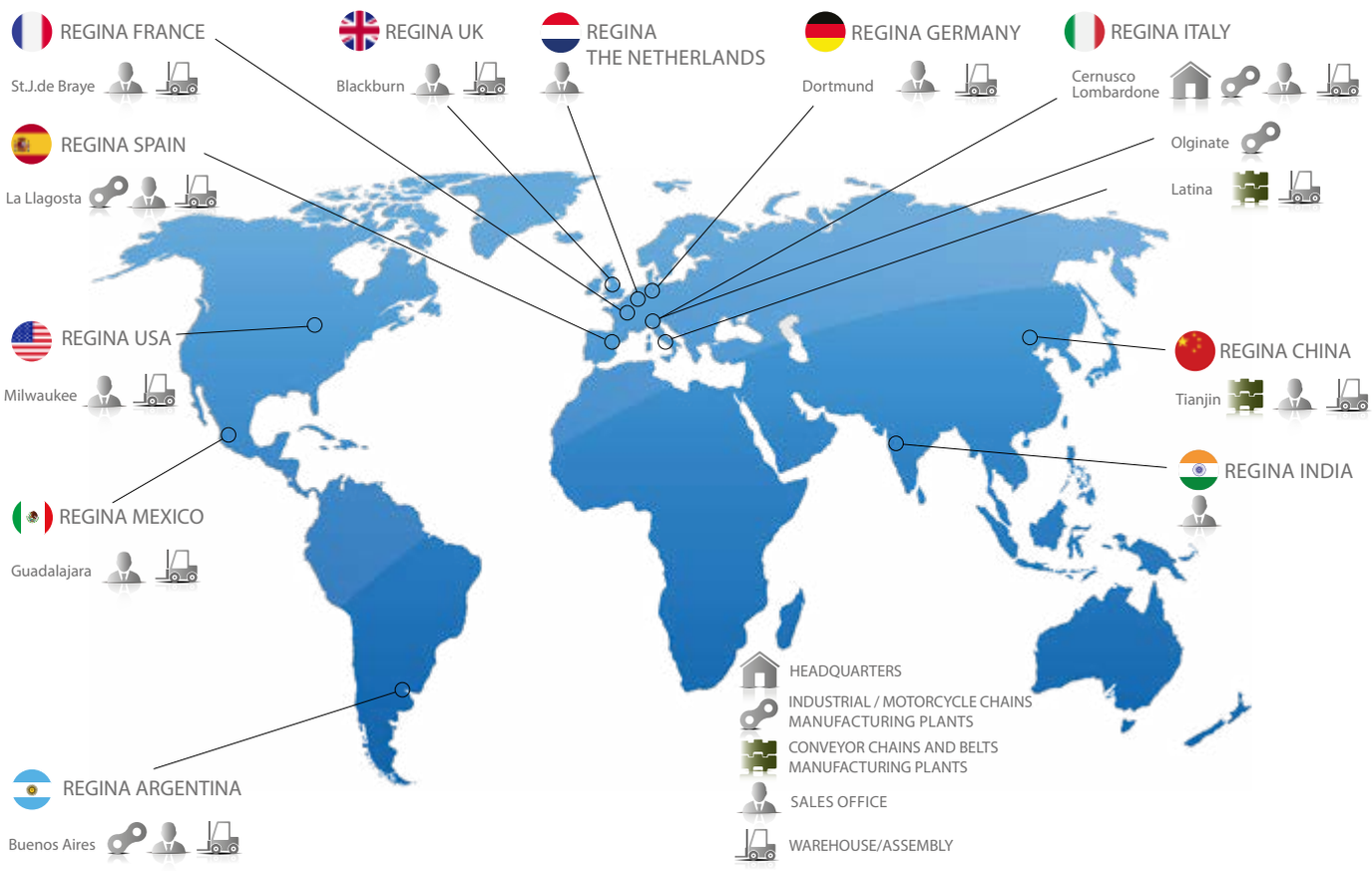

REGINA
CHAIN
PERFORMANCE IN MOTION

STRAIGHT RUNNING STEEL CHAINS

FliteTop®

915
Single hinge
Reduced plate gap (1,6 mm)
Pitch 1 ½" (38,1 mm)
Thickness 3 mm (0.118")
Hinge 42 mm (1.654")

Page 28

PHD 915
Single hinge
Reduced plate gap (1,6 mm)
Increased pin hardness
Pitch 1 ½" (38,1 mm)
Thickness 3 mm (0.118")
Hinge 42 mm (1.654")

Page 28

2815
Double hinge
Pitch 1 ½" (38,1 mm)
Thickness 3 mm (0.118")
Hinge 80 mm (3.150")

Page 30

PHD 2815
Double hinge
Increased pin hardness
Pitch 1 ½" (38,1 mm)
Thickness 3 mm (0.118")
Hinge 80 mm (3.150")

Page 31

PHD 9157
Heavy duty single hinge
Increased pin hardness
Pitch 1 ½" (38,1 mm)
Thickness 3 mm (0.118")
Hinge 57 mm (2.244")

Page 32

803
Mini hinge
Pitch 1 ½" (38,1 mm)
Thickness 3 mm (0.118")
Hinge 22 mm (0.866")

Page 33

SIDEFLEXING STEEL CHAINS

FliteTop®

881
Bevel
Pitch 1 ½" (38,1 mm)
Thickness 3 mm (0.118")
Hinge 43 mm (1.693")

Page 34

981
Bevel
Reduced plate gap
Pitch 1 ½" (38,1 mm)
Thickness 3 mm (0.118")
Hinge 43 mm (1.693")

Page 35

881T
TAB
Pitch 1 ½" (38,1 mm)
Thickness 3 mm (0.118")
Hinge 43 mm (1.693")

Page 36

981T
TAB
Reduced plate gap
Pitch 1 ½" (38,1 mm)
Thickness 3 mm (0.118")
Hinge 43 mm (1.693")

Page 37

981M
Magnetic
Reduced plate gap
Pitch 1 ½" (38,1 mm)
Thickness 3 mm (0.118")
Hinge 42 mm (1.654")

Page 38

PHD 981M
Magnetic
Reduced plate gap
Increased pin hardnes
Pitch 1 ½" (38,1 mm)
Thickness 3 mm (0.118")
Hinge 42 mm (1.654")

Page 38

PHD 9857M
Magnetic
Heavy duty single hinge
Increased pin hardness
Pitch 1 ½" (38,1 mm)
Thickness 3 mm (0.118")
Hinge 57 mm (2.244")

Page 39

982T
TAB
Reduced sideflexing radius (200 mm)
Pitch 1 ½" (38,1 mm)
Thickness 3 mm (0.118")
Hinge 43 mm (1.693")

Page 40

RUBBERIZED SURFACE STEEL CHAINS

FliteTop®

PHDG 915
Straight running
Single hinge
Increased pin hardness
Pitch 1 ½" (38,1 mm)
Thickness 3 mm (0.118")
Hinge 42 mm (1.654")

Page 42

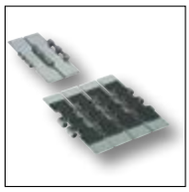

PHDG 2815
Straight running
Double hinge
Increased pin hardness
Pitch 1 ½" (38,1 mm)
Thickness 3 mm (0.118")
Hinge 80 mm (3.150")

Page 43

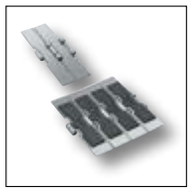

PHDG 9157
Straight running
Heavy duty single hinge
Increased pin hardness
Pitch 1 ½" (38,1 mm)
Thickness 3 mm (0.118")
Hinge 57 mm (2.244")

Page 44

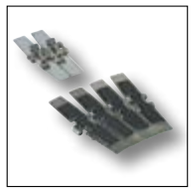

PHDG 981T
Sideflexing TAB
Reduced plate gap
Increased pin hardness
Pitch 1 ½" (38,1 mm)
Thickness 3 mm (0.118")
Hinge 43 mm (1.693")

Page 45

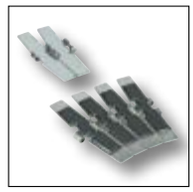

PHDG 981M
Sideflexing magnetic
Reduced plate gap
Increased pin hardness
Pitch 1 ½" (38,1 mm)
Thickness 3 mm (0.118")
Hinge 42 mm (1.654")

Page 46

PHDG 9857M
Sideflexing magnetic
Heavy duty single hinge
Increased pin hardness
Pitch 1 ½" (38,1 mm)
Thickness 3 mm (0.118")
Hinge 57 mm (2.244")

Page 47

STRAIGHT RUNNING PLASTIC CHAINS

FliteTop®

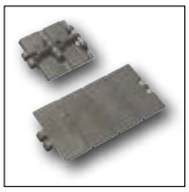

820
Single hinge
Pitch 1 ½" (38,1 mm)
Thickness 4 mm (0.157")
Hinge 41,6 mm (1.638")

Page 50

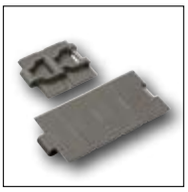

828
Reinforced single hinge
Reduced plate gap
Pitch 1 ½" (38,1 mm)
Thickness 4 mm (0.157")
Hinge 42 mm (1.654")

Page 51

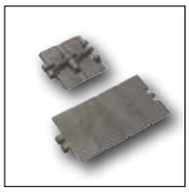

831
Single hinge
Reinforced top plate
Pitch 1 ½" (38,1 mm)
Thickness 4,8 mm (0.189")
Hinge 41,6 mm (1.638")

Page 52

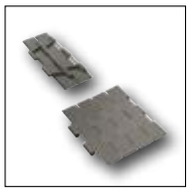

821
Double hinge
Reinforced top plate
Pitch 1 ½" (38,1 mm)
Thickness 4,8 mm (0.189")
Hinge 136,5 mm (5.374")

Page 53

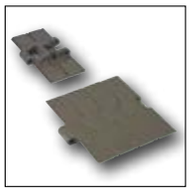

8257
Heavy duty single hinge
Reinforced top plate
Pitch 1 ½" (38,1 mm)
Thickness 4,8 mm (0.189")
Hinge 57 mm (2.244")

Page 54

SIDEFLEXING PLASTIC CHAINS

FliteTop®

880
Bevel
Pitch 1 ½" (38,1 mm)
Thickness 4 mm (0.157")
Hinge 43 mm (1.693")

Page 55

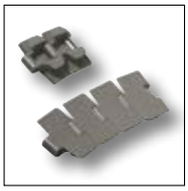

880T
TAB
Pitch 1 ½" (38,1 mm)
Thickness 4 mm (0.157")
Hinge 42,9 mm (1.689")

Page 56

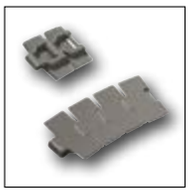

880M RG
Magnetic
Reduced plate gap
Pitch 1 ½" (38,1 mm)
Thickness 4 mm (0.157")
Hinge 42 mm (1.654")

Page 57

879
Bevel
Reinforced top plate
Pitch 1 ½" (38,1 mm)
Thickness 4,8 mm (0.189")
Hinge 43 mm (1.693")

Page 58

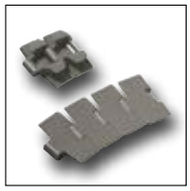

879T
TAB
Reinforced top plate
Pitch 1 ½" (38,1 mm)
Thickness 4,8 mm (0.189")
Hinge 42,9 mm (1.689")

Page 59

882
Bevel
Heavy duty single hinge
Reinforced top Plate
Pitch 1 ½" (38,1 mm)
Thickness 4,8 mm (0.189")
Hinge 61 mm (2.402")

Page 60

882T
TAB
Heavy duty single hinge
Reinforced top Plate
Pitch 1 ½" (38,1 mm)
Thickness 4,8 mm (0.189")
Hinge 57 mm (2.244")

Page 61

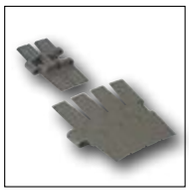

882M
Magnetic
Heavy duty single hinge
Reinforced top Plate
Pitch 1 ½" (38,1 mm)
Thickness 4,8 mm (0.189")
Hinge 57 mm (2.244")

Page 62

878T
TAB
Reinforced top Plate
Reduced sideflexing
radius (200 mm)
Pitch 1 ½" (38,1 mm)
Thickness 4,8 mm (0.189")
Hinge 42,9 mm (1.689")

Page 63

880TA
TAB
Vacuum series
Pitch 1 ½" (38,1 mm)
Thickness 4 mm (0.157")
Hinge 42,9 mm (1.689")

Page 64

RUBBERIZED SURFACE PLASTIC CHAINS

FliteTop®

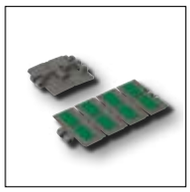

HFX 820
Straight running
Single hinge
Pitch 1 ½" (38,1 mm)
Thickness 4 mm (0.157")
Hinge 41,6 mm (1.638")

Page 66

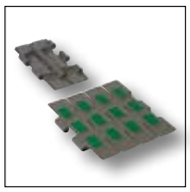

HFX 821
Straight running
Double hinge
Pitch 1 ½" (38,1 mm)
Thickness 4,8 mm (0.189")
Hinge 136,5 mm (5.374")

Page 67

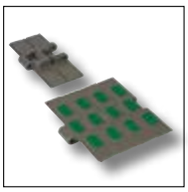

HFX 8257
Straight running
Heavy duty single hinge
Reinforced Top Plate
Pitch 1 ½" (38,1 mm)
Thickness 4,8 mm (0.189")
Hinge 57 mm (2.244")

Page 68

HFX 880T
Sideflexing TAB
Pitch 1 ½" (38,1 mm)
Thickness 4 mm (0.157")
Hinge 42,9 mm (1.689")

Page 69

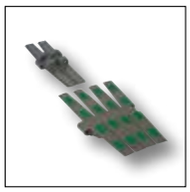

HFX 882T
Sideflexing TAB
Heavy duty single hinge
Reinforced Top Plate
Pitch 1 ½" (38,1 mm)
Thickness 4,8 mm (0.189")
Hinge 57 mm (2.244")

Page 70

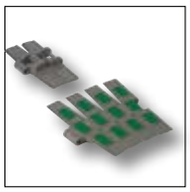

HFX 882M
Sideflexing Magnetic
Heavy duty single hinge
Reinforced Top Plate
Pitch 1 ½" (38,1 mm)
Thickness 4,8 mm (0.189")
Hinge 57 mm (2.244")

Page 71

HFX 1873T
Two Piece
Sideflexing TAB
Pitch ¾" (19,05 mm)
Thickness 4 mm (0.157")
Hinge 32,1 mm (1.264")

Page 72

TWO-PIECE CHAINS

FliteTop®

1864
Straight running
Steel flights
Pitch ¾" (19,05 mm)
Thickness 3 mm (0.118")
Hinge 27 mm (1.063")

Page 75

1874T/1874TM
Sideflexing TAB
Steel flights
Flight gap 8,2 mm
Reduced flight gap 5,7 mm (1874TM)
Pitch ¾" (19,05 mm)
Thickness 3 mm (0.118")
Hinge 31,8 mm (1.252")

Page 76

843
Straight running
Plastic flights
Pitch ½" (12,7 mm)
Thickness 3.2 mm (0.126")
Hinge 20,6 mm (0.811")

Page 77

845
Straight running
Plastic flights
Bidirectional
Pitch ½" (12,7 mm)
Thickness 3.2 mm (0.126")
Hinge 20,6 mm (0.811")

Page 78

RR 845
Straight running
Plastic flights
Bidirectional
Raised rib
Pitch ½" (12,7 mm)
Thickness 12,2 mm (0.480")
Hinge 20,6 mm (0.811")

Page 79

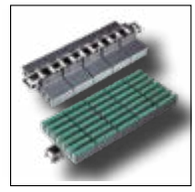

HF RR 845
Straight running
Plastic flights
Bidirectional
Rubberized raised rib
Pitch ½" (12,7 mm)
Thickness 12,2 mm (0.480")
Hinge 20,6 mm (0.811")

Page 80

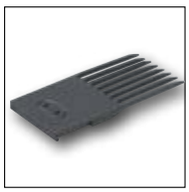

Transfer combs
For HF RR 845 belts

Page 81

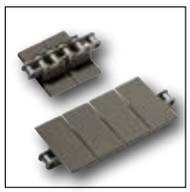

863
Straight running
Plastic flights
Pitch ¾" (19,05 mm)
Thickness 4 mm (0.157")
Hinge 34,1 mm (1.343")

Page 82

1843T
Sideflexing TAB
Plastic flights
Pitch ½" (12,7 mm)
Thickness 3.2 mm (0.126")
Hinge 20 mm (0.787")

Page 83

1873T
Sideflexing TAB
Plastic flights
Pitch ¾" (19,05 mm)
Thickness 4 mm (0.157")
Hinge 32,1 mm (1.264")

Page 84

1863T
Sideflexing TAB
Plastic flights
Reduced flight gap
Pitch ¾" (19,05 mm)
Thickness 4 mm (0.157")
Hinge 32,1 mm (1.264")

Page 85

1883
Spiral chain
Plastic flights
Integrated bearings
Pitch 1" (25,4 mm)
Thickness 4,8 mm (0.189")
Hinge 42,9 mm (1.689")

Page 86

HFX 1883
Spiral chain
Rubberized plastic flights
Integrated bearings
Pitch 1" (25,4 mm)
Thickness 4,8 mm (0.189")
Hinge 42,9 mm (1.689")

Page 87

GRIPPER CHAINS

FliteTop®

GV 1874T
Two - piece
Steel flights
Short fingers
Pitch ¾" (19,05 mm)
Thickness 3 mm (0.118")
Hinge 31,8 mm (1.252")

Page 91

EV 1874T
Two - piece
Steel flights
Long fingers
Pitch ¾" (19,05 mm)
Thickness 3 mm (0.118")
Hinge 31,8 mm (1.252")

Page 92

GW 1873T
Two - piece
Plastic flights
Short fingers
Pitch ¾" (19,05 mm)
Thickness 4 mm (0.157")
Hinge 32,1 mm (1.264")

Page 93

EW 1873T
Two - piece
Plastic flights
Long fingers
Pitch ¾" (19,05 mm)
Thickness 4 mm (0.157")
Hinge 32,1 mm (1.264")

Page 94

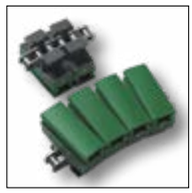

GD 1873T
Two - piece
Plastic flights
D-shape
Pitch ¾" (19,05 mm)
Thickness 4 mm (0.157")
Hinge 32,1 mm (1.264")

Page 95

GU 1873T
Two-piece
Plastic Flights
U-shape
Pitch ¾" (19,05 mm)
Thickness 4 mm (0.157")
Hinge 32,1 mm (1.264")

Page 96

GD 1873T
Two - piece
Plastic flights
D-shape
Pitch ¾" (19,05 mm)
Thickness 4 mm (0.157")
Hinge 32,1 mm (1.264")

Page 97

GC 1873T
Two-piece
Plastic flights
"House"-shape rubber
Pitch ¾" (19,05 mm)
Thickness 4 mm (0.157")
Hinge 32,1 mm (1.264")

Page 98

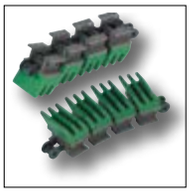

EW 1843T
Two-piece
Plastic Flights
Long Fingers
Pitch ½" (12,7 mm)
Thickness 3,3 mm (0.130")
Hinge 19,85 mm (0.781")

Page 99

GW 878T
One - piece
Plastic plates
Short fingers
Pitch 1 ½" (38,1 mm)
Thickness 4,8 mm (0.189")
Hinge 42,9 mm (1.689")

Page 100

EW 878T
One - piece
Plastic plates
Long fingers
Pitch 1 ½" (38,1 mm)
Thickness 4,8 mm (0.189")
Hinge 42,9 mm (1.689")

Page 101

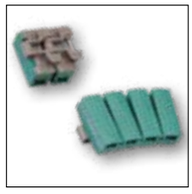

GD 878T
One - piece
Plastic plates
D-shape
Pitch 1 ½" (38,1 mm)
Thickness 4,8 mm (0.189")
Hinge 42,9 mm (1.689")

Page 101

GU 878T
One - piece
Plastic plates
U-shape
Pitch 1 ½" (38,1 mm)
Thickness 4,8 mm (0.189")
Hinge 42,9 mm (1.689")

Page 103

LBP CHAINS (LOW BACK-LINE PRESSURE)

FliteTop

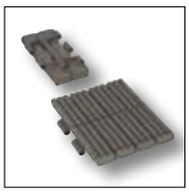

LBP 821
Straight running
Double hinge
Pitch 1 ½" (38,1 mm)
Thickness 4,8 mm (0.189")
Hinge 136,5 mm (5.374")

Page 106

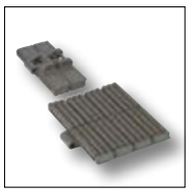

LBP 8257
Straight running
Heavy duty single hinge
Pitch 1 ½" (38,1 mm)
Thickness 4,8 mm (0.189")
Hinge 57 mm (2.244")

Page 107

LBP 882T
Sideflexing TAB
Heavy duty single hinge
Pitch 1 ½" (38,1 mm)
Thickness 4,8 mm (0.189")
Hinge 57 mm (2.244")

Page 108

LBP 882M
Sideflexing Magnetic
Heavy duty single hinge
Pitch 1 ½" (38,1 mm)
Thickness 4,8 mm (0.189")
Hinge 57 mm (2.244")

Page 109

BIPLANAR CHAINS

FliteTop

1700
Sideflexing
Increased product support surface
Pitch 1.97" (50 mm)
Thickness 4 mm (0.157")

Page 111

Turning disc
For 1700 Series

Page 112

1702
Sideflexing
Pitch 1.97" (50 mm)
Thickness 5 mm (0.197")

Page 114

1701T
Sideflexing TAB
Pitch 1.97" (50 mm)
Thickness 5 mm (0.197")

Page 115

SPROCKETS FOR CHAINS

FliteTop

Page 118

8mm NANOPITCH BELT

Matveyor®

8300
Solid Top
Imperial width standard
Thickness 6,15 mm (0.242")

Page 162

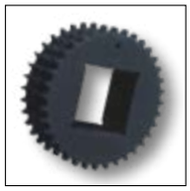

Sprockets
8300 series

Page 163

½" PITCH BELTS AND CHAINS

Matveyor®

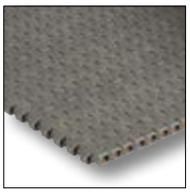

600
Solid top
Flat bottom surface
Metric width standard
Thickness 8,7 mm (0.343")

Page 168

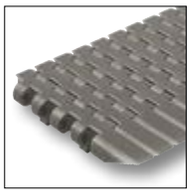

600G ATM
Active transfer modules
Solid top
Metric width standard
Thickness 8,7 mm (0.343")

Page 170

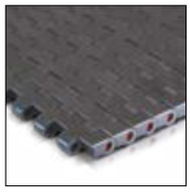

610
Solid top
Round bottom surface
Metric width standard
Thickness 8,7 mm (0.343")

Page 171

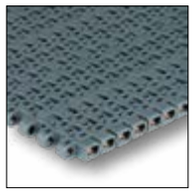

500
Flush grid
Metric width standard
Thickness 8,7 mm (0.343")

Page 173

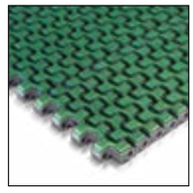

HF 510
Rubberized surface
Metric width standard
Thickness 8,7 mm (0.343")

Page 174

LBP 610
LBP rollers
Metric width standard
Thickness 8,7 mm (0.343")

Page 176

300
Solid Top
Imperial width standard
Thickness 8,7 mm (0.343")

Page 177

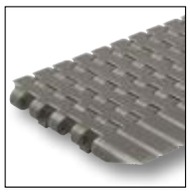

300G ATM
Active transfer modules
Solid top
Imperial width standard
Thickness 8,7 mm (0.343")

Page 178

200
Flush grid
Imperial width standard
Thickness 8,7 mm (0.343")

Page 179

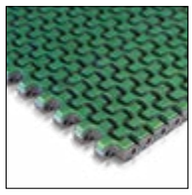

HF 200
Rubberized surface
Imperial width standard
Thickness 8,7 mm (0.343")

Page 180

Nosebar
For ½" pitch belts with metric and imperial width standard

Page 181

611 / RR 611
Narrow chains
Solid top (611)
Raised Rib (RR 611)
Thickness 8,7 mm (0.343")

Page 183

Transfer combs
For RR 611 belts

Page 185

Sprockets
611 series
600 series

Page 186

1" PITCH LIGHT DUTY BELTS AND CHAINS

Matveyor®

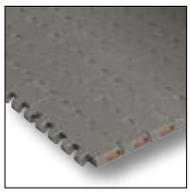

1600
Solid top
Metric width standard
Thickness 8,7 mm (0.343")

Page 195

1600G ATM
Active transfer modules
Solid top
Metric width standard
Thickness 8,7 mm (0.343")

Page 197

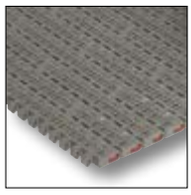

1500
Flush grid
Metric width standard
Thickness 8,7 mm (0.343")

Page 198

1500G ATM
Active transfer modules
Flush grid
Metric width standard
Thickness 8,7 mm (0.343")

Page 201

1600 & 1500 with flights

Page 202

RR 1500
Raised rib
Metric width standard
Thickness 8,7 mm (0.343")

Page 204

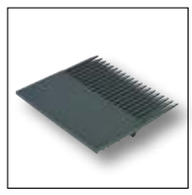

Transfer combs
For RR 1500 belts

Page 205

HF 1600
Rubberized surface
Metric width standard
Thickness 8,7 mm (0.343")

Page 206

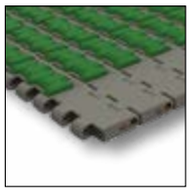

HFS 1600
Rubberized surface
Side indent
Metric width standard
Thickness 8,7 mm (0.343")

Page 207

RR 1600
Dedicated chains
Raised rib
Metric width standard
Thickness 8,7 mm (0.343")

Page 208

Transfer combs
For RR 1600 chains

Page 209

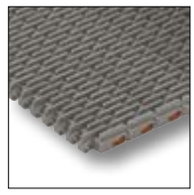

1110
Raised rib
Imperial width standard
Thickness 9,6 mm (0.378")

Page 210

Transfer combs
For 1110 belts

Page 211

Sprockets
1010 series

Page 212

3/4" PITCH MEDIUM DUTY BELTS AND CHAINS

Matveyor®

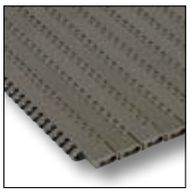

7300
Solid top
Imperial width standard
Thickness 8,7 mm (0.343")

Page 221

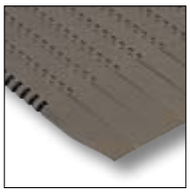

7300G ATM
Active transfer modules
Solid top
Imperial width standard
Thickness 8,7 mm (0.343")

Page 223

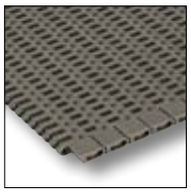

7200
Flush grid
Imperial width standard
Thickness 8,7 mm (0.343")

Page 224

Sprockets
7300 series

Page 226

1" PITCH HEAVY DUTY BELTS AND CHAINS

Matveyor®

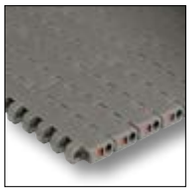

USPM
Solid top
Metric width standard
Thickness 12,7 mm (0.500")

Page 231

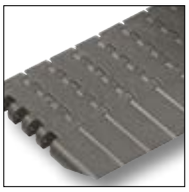

USPMG ATM
Active transfer modules
Solid top
Metric width standard
Thickness 12,7 mm (0.500")

Page 233

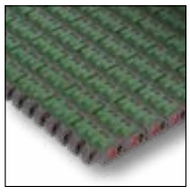

HF USPM
Rubberized surface
Metric width standard
Thickness 12,7 mm (0.500")

Page 234

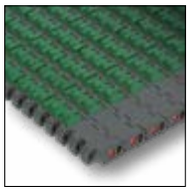

HFS USPM
Rubberized surface
Side indent
Metric width standard
Thickness 12,7 mm (0.500")

Page 235

LBP USPM
LBP rollers
Metric width standard
Thickness 12,7 mm (0.500")

Page 236

LBP XSPM
LBP rollers
Safety design
Metric width standard
Thickness 11 mm (0.433")

Page 237

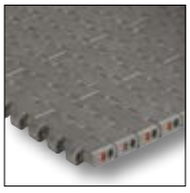

USP
Solid top
Imperial width standard
Thickness 12,7 mm (0.500")

Page 238

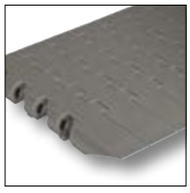

USPG ATM
Active transfer modules
Solid top
Imperial width standard
Thickness 12,7 mm (0.500")

Page 240

Sprockets
USP series

Page 241

1" PITCH SIDEFLEXING CHAINS

Matveyor®

783T
TAB
Solid top
For light duty belts
Thickness 8,7 mm (0.343"

Page 246

783M
Magnetic
Solid top
For light duty belts
Thickness 8,7 mm (0.343")

Page 247

782M
Magnetic
Flush grid
For light duty belts
Thickness 8,7 mm (0.343")

Page 247

793T
TAB
Solid top
For heavy duty belts
Thickness 12,7 mm (0.500")

Page 248

793M
Magnetic
Solid top
For heavy duty belts
Thickness 12,7 mm (0.500")

Page 249

793L
Low Pin Center
Solid Top
For heavy duty belts
Thickness 12,7 mm (0.500")

Page 250

Sprockets
782 series

Page 251

1 ¼" PITCH HEAVY DUTY SIDEFLEXING BELTS

Matveyor®

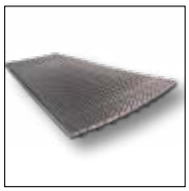

2556HTB
TAB+Bearing
Reinforced outer module
Metric width standard
Thickness 12,7 mm (0.500")

Page 255

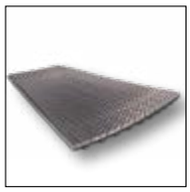

2556HTB-SR
TAB+Bearing
Reinforced outer module
Reduced sideflexing radius
Metric width standard
Thickness 12,7 mm (0.500")

Page 256

Sprockets
2556 series

Page 257

2" PITCH HEAVY DUTY RAISED RIB BELTS

Matveyor®

3125
Raised rib
Seamless product support at the edges of the belt
Imperial width standard
Thickness 14,2 mm (0.580")

Page 265

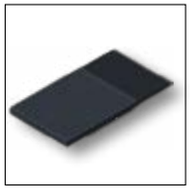

Transfer combs
For 3125 belt

Page 266

Sprockets
3000 series

Page 268

1 1/2" PITCH HEAVY DUTY UCC CHAINS

ULTOP®

UCC
Solid top
Imperial width standard
Thickness 12,7 mm (0.500")

Page 272

UCCG ATM
Active transfer modules
Solid top
Imperial width standard
Thickness 12,7 mm (0.500")

Page 273

UCC 138
¾" Pitch
Solid top
Imperial width standard
Thickness 15 mm (0.591")

Page 274

Sprockets
UCC series
UCC138 series

Page 275

CORNER TRACKS

Magnetic curves
For FliteTop® and Matveyor® chains

Page 278

TAB curves
For FliteTop® chains and Matveyor® sideflexing belts and chains

Page 320

Bevel curves
For FliteTop® chains

Page 325

Low Pin Center curves
For Matveyor® chains

Page 328

CONVEYOR COMPONENTS

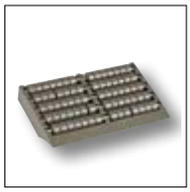

Modular transfer plates
For FliteTop® chains and Matveyor® belts

Page 331

Return rollers
For FliteTop® chains, Matveyor® belts and chains, ULTOP® chains

Page 332

Guide flanges
For FliteTop® chains, Matveyor® belts and chains, ULTOP® chains

Page 334

Return shoe guide
For FliteTop® LBP chains and Matveyor® LBP belts

Page 334

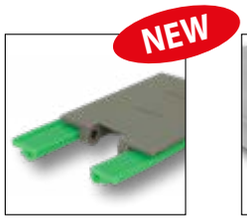

Wear strips
For FliteTop® chains, Matveyor® belts and chains, ULTOP® chains

Page 335

Product side guides

Page 342

STEEL AND THERMOPLASTIC CHAINS, MODULAR BELTS

	Type	Description	Features
STEEL	S	**Carbon Steel**	Through hardened carbon steel. Surface and core hardness of 43 HRC. Excellent strength and wear resistance. Not suitable in presence of water.
STEEL	SS - 4	**Ferritic Stainless Steel**	Cold rolled ferritic stainless steel. Good wear, mechanical and corrosion resistance. For food & beverage applications.
STEEL	P	**PRIMA** **Superior Grade** **Ferritic Stainless Steel**	Superior grade of cold rolled special ferritic stainless steel. Special Cr-Ni alloy offering very good wear and mechanical properties. Particularly suitable for high productivity lines (combiners and inliners).
STEEL	SS	**Austenitic Stainless Steel**	Cr-Ni austenitic cold rolled stainless steel. It guarantees the best corrosion resistance to withstand chemical attack. It offers very good wear resistance, due to work hardening and homogeneous chemical structure.
ACETAL POM	WA *White*	**White Acetal**	DuPont™ Delrin® homopolymer acetal resin.
ACETAL POM	UP *Dark Brown*	**Ultra Performance Homopolymer Delrin ®**	DuPont™ Delrin® Ultra Performance special homopolymer acetal resin. Particularly suitable for applications where low coefficient of friction and contained dusting are needed.
ACETAL POM	DK2™ *Dark Green*	**Special Delrin ® Reinforced with Kevlar ®**	**Next generation material, based on a Delrin® acetal resin reinforced with Kevlar®**, developed by REGINA and DuPont™, able to reach the lowest coefficient of friction with maximum wear resistance. Thanks to the superior properties of DK2™, the usage of lubricants can be drastically reduced or even eliminated without loosing performance in conveyor applications.
ACETAL POM	NEW e-F.A.S.T. *Yellow*	**Ecological Friction Abating Thermoplastic**	Ultimate dry running homopolymer acetal resin developed combining REGINA field expertise with DuPont™ centenarian acetal resin knowledge. Today's standards for high performance filling lines require a combination of high speed and high productivity, while reducing or eliminating lubrication. REGINA e-F.A.S.T. material is capable of exceeding such standards, thanks to its unique characteristic of delivering a much lower and constant coefficent of friction over time in dry or almost dry running conditions vs. other plastic chains.
ACETAL POM	AS *Black*	**Antistatic Acetal Resin**	Conductive acetal resin particularly suitable for all applications where static charges on the chain must be avoided.
POLYAMIDE	AR *Black*	**Abrasion Resistance Polyamide**	Suitable for glass manufacturing applications. Reinforced polyamide with excellent wear resistance and low dusting. Only for dry running applications.
POLYPROPYLENE	P *Light Blue*	**Reinforced Polypropylene**	For FliteTop® Chains. Reinforced polypropylene that guarantees the best corrosion resistance to withstand chemical attack and an optimum high temperature resistance.
POLYPROPYLENE	PP *Grey*	**Special Polypropylene**	For Matveyor® Belts. Special polypropylene that guarantees the best corrosion resistance to withstand chemical attack and an optimum high temperature resistance.
POLYESTER	ULF *Light Grey*	**Ultra Low Friction Polyester Resin**	Polyester resin that offers good mechanical strength in combination with low coefficient of friction.

DuPont™ Delrin® and DuPont™ Kevlar® are registered trade marks of E.I. DuPont De Nemours and Associates.

Copyright Regina Catene Calibrate s.p.a. - 2020, All rights reserved

RUBBERS

	Type	Description	Features
RUBBER	NEW NBR Black	**NBR Rubber**	NBR Rubber with hardness of 70 ShA, applied on stainless steel chains, guarantees an excellent product grip on inclined/declined conveyors, high wear resistance and superior resistance against sanitizers ordinary used in bottling industries.
	TPE Green	**Thermoplastic Rubber**	Special Thermoplastic rubber with hardness from 50 ShA up to 70 ShA and optimum wear resistance that guarantees exceptional product grip in inclined/declined conveyors and elevators/ lowerators, extending life without loosing elasticity.
	TPE Grey		
	HS Grey	**Heat Stabilized Thermoplastic Rubber**	Special Thermopastic rubber resistant to high temperatures, with hardness from 45 ShA to 70 ShA, for rinser and cap sterilizer applications.
	EPDM Black	**EPDM Rubber**	For gripper chain series. EPDM rubber with hardness of 60 ShA guarantees an excellent grip and high temperature resistance.

BASE ROLLER CHAINS

	Type	Description	Features
STEEL	S	**Carbon Steel**	Through hardened carbon steel. Excellent strength and wear resistance.
	SS	**Stainless Steel**	Stainless Steel for the best corrosion resistance to withstand chemical attack. Prelubricated with high performance lube suitable for the food industry (USDA H1 approved) which guarantees long-lasting effect for the chain.
	BS	**Maintenance free carbon steel**	For "lube-free" applications. ENDURO maintenance free chains outlast standard chains without periodic lubrication. The unique tecnology and "heavy wall" design of the sintered bushing ensures excellent wear resistance.
	S+NC	**Carbon Steel Nickel Plated**	Through hardened carbon steel and electroless nickel plating for good corrosion resistance. Excellent strength and wear resistance.

Copyright Regina Catene Calibrate s.p.a. - 2020, All rights reserved

SPROCKETS AND TURNING DISCS

	Type	Description	Features
POLYAMIDE	PA *Black*	**Polyamide**	For sprockets. Machined polyamide that guarantees toughness combined with wear and abrasion resistance.
POLYAMIDE	PGF *Black*	**Reinforced Polyamide**	For sprockets and turning discs. Moulded polyamide reinforced with glass fibers allowing higher strength and excellent abrasion resistance.
ACETAL POM	WA *White*	**White Acetal**	For sprockets 3000 series. DuPont™ Delrin® homopolymer acetal resin.

CURVES AND STATIC NOSEBAR

	Type	Description	Features
POLYETHYLENE	SUPREME -A *Green*	**UHMWPE**	For Magnetic and Low Pin Center curves. Ultra high molecular weight polyethylene (about 7 milion gr/mole) with good wear resistance and low coefficient of friction.
POLYETHYLENE	NEW e-SLIDE *Blue*	**High performance Self-Lubricating UHMWPE**	For Magnetic, TAB, Bevel and Low Pin Center curves. New ultimate Ultra High Molecular Weight Polyethylene (molecular density of 9.000.000 g/mol), developed and produced in-house by REGINA. Thanks to special lube additives compounded with the material, provides superior sliding performance and excellent wear resistance of chains and belts in most critical conveying applications characterized by high-speeds, dry running conditions, high abrasion.
POLYETHYLENE	UHMWPE *Black*	**UHMWPE**	For Bevel and TAB curves. Ultra high molecular weight polyethylene with good wear and abrasion resistance.
POLYETHYLENE	SUPREME -L *Grey*	**Self-Lubricating UHMWPE**	For ½" pitch belts nosebar. High grade of ultra high molecular weight polyethylene (about 7-9 milion gr/mole) with optimum wear and abrasion resistance, combined with advanced lubricant for excellent sliding properties.
POLY AMIDE	SUPREME -S *Yellow*	**Oil-Filled PA**	For Magnetic, TAB, Bevel and Low Pin Center curves. Special high grade and oil-filled polyamide, with superior abrasion resistance and extremely high PV limit. Dry running only.

Copyright Regina Catene Calibrate s.p.a. - 2020, All rights reserved

CONVEYOR COMPONENTS

	Type	Description	Features
ACETAL POM	DG *Dark Grey*	**Acetal Resin**	For combs. Good wear resistance and low coefficient of friction.
POLYETHYLENE	HDPE *Black* HDPE *Grey* HDPE *Green*	**High Density Polyethylene**	For return rollers, product side guide and shoe guide. High density polyethylene with low coefficent of friction and good wear resistance.
	UHMWPE *Green* UHMWPE *Black*	**UHMWPE**	For wear strips. Ultra high molecular weight polyethylene with reduced coefficent of friction and high wear resistance.
	NEW e-SLIDE *Blue*	**High performance Self-Lubricating UHMWPE**	For wear strips. New ultimate Ultra High Molecular Weight Polyethylene (molecular density of 9.000.000 g/mol), developed and produced in-house by REGINA. Thanks to special lube additives compounded with the material, provides superior sliding performance and excellent wear resistance of chains and belts in most critical conveying applications characterized by high-speeds, dry running conditions, high abrasion.
POLYPRO PYLENE	PP *Black*	**Polypropylene**	For guide flanges. Lightweight material that offers optimum chemical and high temperature resistance.

Copyright Regina Catene Calibrate s.p.a. - 2020, All rights reserved

DK²™

Developed with DUPONT and on the market for 20 years, DK² is a lubricated acetal resin reinforced with Kevlar® that combines a **low coefficient of friction** with a **very high wear resistance**, resulting in longer chain life and running-cost savings.

COF IN DRY RUNNING CONDITIONS*

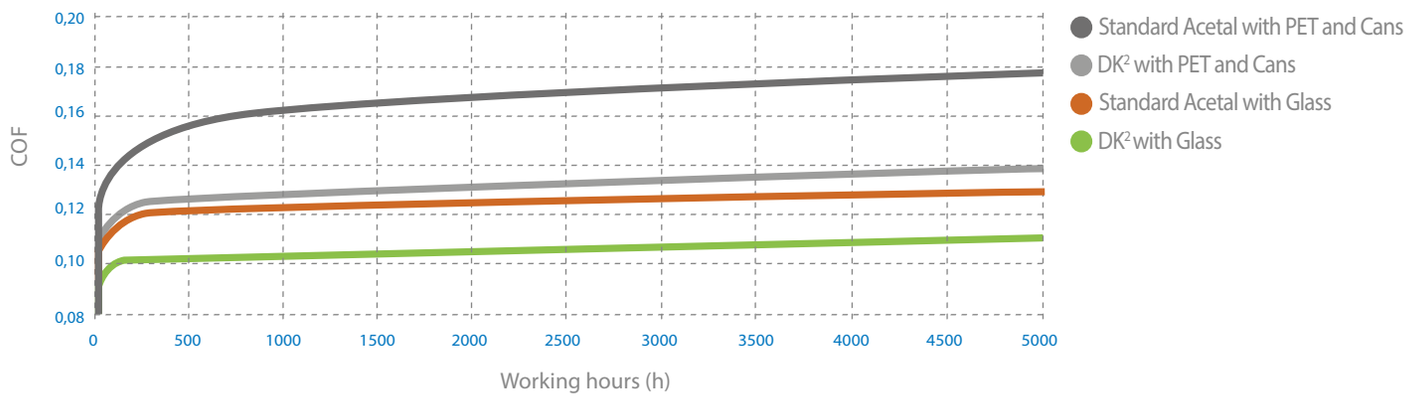

WEAR IN DRY RUNNING CONDITIONS*

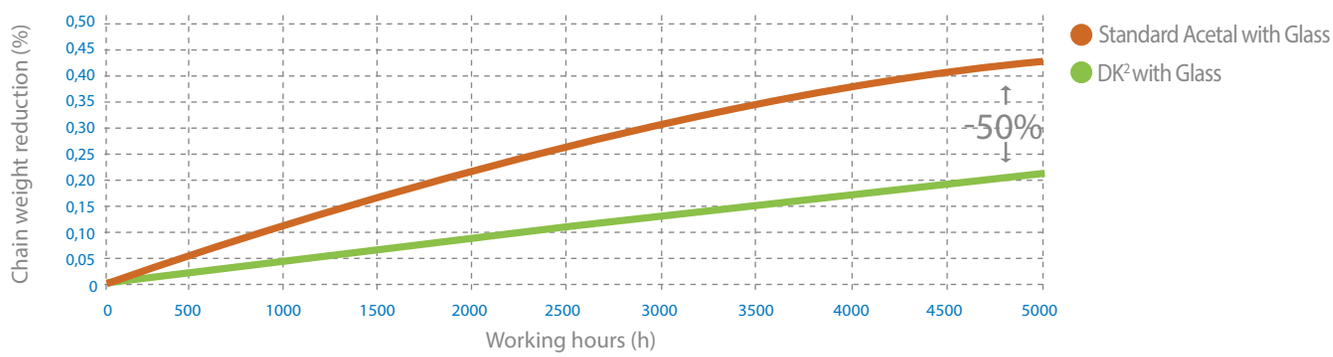

FEATURES

- Excellent for PET, Can and Glass applications
- Lower coefficient of friction in dry running conditions vs. standard acetal resin
- 30-50% superior wear resistance in dry running conditions vs. standard acetal resin (depending on container material)

BENEFITS

- Significant reduction or elimination of lubrication, leading to:
  - Less lube "build-up"
  - Reduction of motor power absorption
  - Longer center to center distances
- Very significant chain life increase vs. standard acetal resins
- Lower running and maintenance costs vs. standard acetal resins

*Coefficient of friction and wear data measured in actual field tests

Copyright Regina Catene Calibrate s.p.a. - 2020, All rights reserved

e-F.A.S.T.

FRICTION ABATING SLIDING THERMOPLASTIC

NEW FOR PET BOTTLES

Developed with DUPONT, e-F.A.S.T. is the ultimate dry running acetal resin compounded with specific lubricants for PET bottling applications, able to deliver a **much lower and constant coefficient of friction** and **minimal elongation** over time **in dry running conditions** vs. other plastic chains.

COF IN DRY RUNNING CONDITIONS*

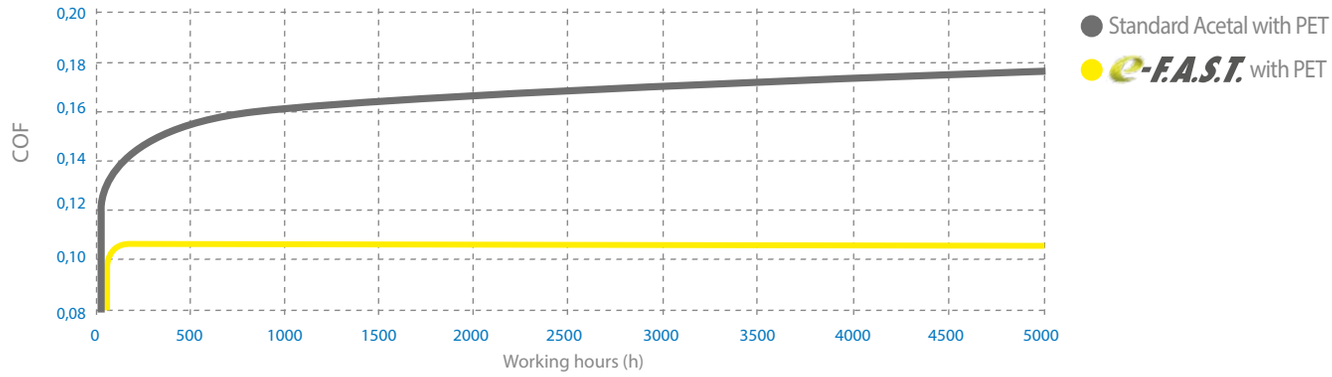

WEAR IN DRY RUNNING CONDITIONS*

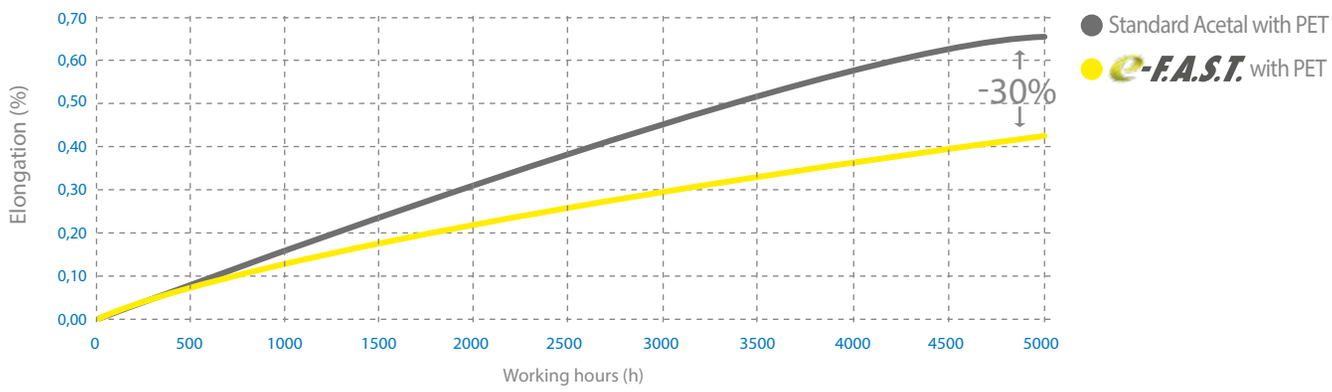

FEATURES	BENEFITS
Lowest coefficient of friction in PET dry running applications	Elimination or strong reduction of lubrication
Long lasting and constant coefficient of friction	Reduced chain pull and increased energy savings
Negligible dusting in dry running conditions	Increased chain life
Bright chain color	Reduced maintenance costs
	Due to bright color, easy identification of conveyor cleaning needs

*Coefficient of friction and wear data measured in actual field tests

Copyright Regina Catene Calibrate s.p.a. - 2020, All rights reserved

MATERIALS WORKING TEMPERATURES

The materials used by REGINA can be applied in the range of temperatures stated in the following tables.

TABLE "A"

MATERIAL		USED FOR	MIN. TEMPERATURE		MAX. TEMPERATURE DRY ENVIRONMENT		MAX. TEMPERATURE WET ENVIRONMENT	
			°C	°F	°C	°F	°C	°F
STEEL	CARBON STEEL S	CHAINS	-30	-22	+371	+700	–	–
	FERRITIC STAINLESS STEEL SS - 4 P	CHAINS	-40	-40	+427	+800	+427	+800
	AUSTENITIC STAINLESS STEEL SS	CHAINS	-40	-40	+538	+1000	+538	+1000
PLASTIC	ACETAL RESIN AS UP DT2™ WA DG e-F.A.S.T.	CHAINS / BELTS/ SPROCKETS /COMBS	-40	-40	+80	+176	+65	+149
	POLYPROPYLENE P PP PP	CHAINS / BELTS / COMPONENTS	0	32	+104	+220	+104	+220
	ABRASION RESISTANT POLYAMIDE* AR	CHAINS / BELTS	-40	-40	+100	+212	–	–
	POLYESTER RESIN ULF	CHAINS / BELTS	+4	+39	+80	+176	+65	+149
	POLYAMIDE PA PGF	SPROCKETS / TURNING DISCS	-20	-4	+120	+248	+120	+248
	POLYETHYLENE SUPREME -A SUPREME -L UHMWPE e-SLIDE HDPE HDPE UHMWPE UHMWPE HDPE	CURVES / NOSEBAR / COMPONENTS	-40	-40	+80	+176	+80	+176
	POLYAMIDE* SUPREME -S	CURVES	-40	-40	+100	+212	–	–

* For dry running applications only.

TABLE "B"

RUBBER MATERIAL	COLOUR	AVERAGE HARDNESS	MIN. TEMPERATURE		MAX. TEMPERATURE DRY ENVIRONMENT		MAX. TEMPERATURE WET ENVIRONMENT		NOT SUITABLE WITH	RESISTANT TO
		ShA	°C	°F	°C	°F	°C	°F		
NBR NBR	BLACK	70	-10	+14	+110	+230	+80	+176	STRONG ACIDS AND BASES	OILS
EPDM EPDM	BLACK	60	-30	-22	+120	+248	+120	+248	OILS	WEAK ACIDS
THERMOPLASTIC TPE TPE	GREEN/GREY	50-70	-40	-40	+80	+176	+80	+176	OILS	WEAK ACIDS
HEAT STABILIZED THERMOPLASTIC HS	GREY	45-70	-30	-22	+130	+266	+130	+266	OILS	HIGH TEMPERATURES

Copyright Regina Catene Calibrate s.p.a. - 2020, All rights reserved

CHAINS MATERIALS CHEMICAL RESISTANCE

It is important to choosing the right material for FliteTop®, Matveyor® and ULTOP® chains and belts according to possible chemicals used in application.
As a guide TABLE "C" shows the performance of FliteTop®, Matveyor® and ULTOP® chains/belts materials with various chemicals. For chemicals not listed in TABLE "C", please contact our Technical Service group for advice.

TABLE "C"

CHEMICAL AGENT	CARBON STEEL	AUSTENITIC STAINLESS STEEL	FERRITIC STAINLESS STEEL		ACETAL RESIN		POLYPROPYLENE		ABRASION RESISTANT POLYAMIDE	POLYESTER RESIN
	S	SS	SS - 4	P	AS	UP	P	PP	AR	ULF
						WA				
ACETIC ACID 5%	-	*	-		-		*		+	*
ACETONE	-	*	*		+		*		*	+
ALCOHOL	*	*	*		*		*		*	*
AMMONIA CONC.	+	*	*		-		*		*	+
AMMONIA WATER SOL.	+	*	*		*		*		*	*
ANILINE 3%	/	/	/		*		*		/	+
AQUA REGIA	-	-	-		-		+		/	/
BEER	+	*	*		*		*		*	*
BENZENE	*	*	*		*		*		*	-
BENZOL	*	*	*		*		*		*	+
BRINE ACID	-	+	-		+		*		+	+
BUTYRIC ACID	*	*	*		-		*		-	/
CARBON TETRACHLORIDE	+	+	+		*		-		*	/
CHLORINE WATER	-	+	+		-		*		-	-
CHOCOLATE	+	*	*		-		+		-	+
CITRIC ACID	-	*	+		+		*		+	+
FORMALDEHYDE	*	*	*		*		*		*	*
FORMIC ACID 10%	-	-	-		-		*		-	+
FRUIT JUICE	-	*	+		*		*		*	*
GASOLINE	*	*	*		*		+		*	+
GRAPE HUSK	-	+	-		-		*		-	+
HYDROCHLORIC ACID 2%	-	-	-		-		*		-	+
HYDROCHLORIC ACID 37%	-	-	-		-		*		-	-
HYDROGEN PEROXIDE	-	*	+		-		*		-	+
IODINE	-	-	-		-		-		-	-
LACTIC ACID	-	*	+		*		*		+	*
MILK	*	*	*		*		*		*	*
MUSTARD	*	*	*		-		+		-	+
NITRIC ACID 5%	-	*	*		-		*		-	+
OIL	*	*	*		*		-		-	*
OIL (VEGETABLE &MINERAL)	*	*	*		*		*		*	*
PARAFFIN	*	*	*		*		*		*	*
PHOSPHORIC ACID %	-	*	+		-		*		-	-
SEA WATER	-	+	-		+		*		-	*
SOAP & WATER	+	*	*		*		*		*	*
SODIUM CHLORIDE	-	+	-		*		*		*	*
SODIUM HYDROXIDE 25%	-	*	*		-		*		/	-
SODIUM HYPOCHLORITE	-	+	-		-		*		*	+
SOFT DRINKS	+	*	*		*		*		*	*
SPIRITS	*	*	*		*		*		*	*
SULPHURIC ACID 40%	-	-	-		-		*		-	+
TOLUENE	/	/	/		+		+		/	+
TURPENTINE	*	*	*		/		*		/	*
VEGETABLE JUICE	+	*	*		*		*		*	*
WATER	-	*	*		*		*		*	*
WINE	*	*	*		*		*		*	*
XYLOL	/	/	/		/		/		/	/

LEGEND
*=SATISFACTORY
+=MARGINAL
-=UNSATISFACTORY
/=UNDETERMINED

Data shown in the table was taken from laboratory tests performed on unstrained samples and are merely indicative. Chemical resistance under normal working conditions can depend on various factors, such as stress and temperature, concentration of the chemical agent and duration of its effects.

Copyright Regina Catene Calibrate s.p.a. - 2020, All rights reserved

APPLICATIONS

FliteTop® CHAINS

	CONVEYED PRODUCTS		PRODUCTS – STEEL CHAINS: Carbon Steel (S)	Ferritic (SS-4, P)	Austenitic (SS)	PHD Series*	Rubberized Series (NBR)
FOOD / BEVERAGE / BOTTLING APPLICATIONS	CANS (2-3 PIECES)	Depalletizer					
		Inliner/combiner					
		Mass conveyors					
		Accumulation tables					
		Sterilizers / Rinsers Elevators / Lowerators					
		Infeed packaging machines					
		Packaging machines					
		Packaged products convey					
		Inclined conveyors					
	PET BOTTLES	Inliner/combiner					
		Mass conveyors					
		Accumulation tables					
		Sterilizers / Rinsers Elevators / Lowerators					
		Infeed packaging machines					
		Packaging machines					
		Packaged products convey					
		Inclined conveyors					
	GLASS BOTTLES**	Depalletizer		■			
		Inliner/combiner		■		■	
		Mass conveyors		■		■	
		Accumulation tables		■			
		Sterilizers / Rinsers Elevators / Lowerators					
		Infeed packaging machines		■		■	
		Packaging machines		■		■	
		Packaged products convey		■		■	
		Inclined conveyors					■
GLASS MFG.	GLASS BOTTLES	Inliner/combiner	■	■	■	■	
		Mass conveyors	■	■	■	■	
		Accumulation tables	■	■	■	■	
		Palletizer	■	■	■	■	
		Omega / Blowing Machines					
SPECIAL APPLICATIONS	AUTOMOTIVE / MECHANICAL IND.	Conveyors lines	■	■		■	
	CHEMICAL, DETERGENTS, PHARMACEUTICAL AND COSMETICS IND.	Conveyors lines			■		
	DAIRY IND.	Conveyors lines					

* PHD Series features PRIMA material plates and hardened martensitic stainless steel pins.

** In case of returnable glass bottles, please contact REGINA Application Engineers.

Copyright Regina Catene Calibrate s.p.a. - 2020, All rights reserved

PRODUCTS									
PLASTIC CHAINS					SPECIAL CHAINS				
Acetal UP	DLF2™	e-F.A.S.T.	Abrasion Resistant AR	Poly propylene P	HFX Rubberized Series	Two Piece	Gripper	LBP	Biplanar
■	■								
■	■								
■	■								
■	■								
							■		
■	■								
■	■					■			
■	■				■	■		■	
					■				
■	■	■							
■	■	■							
■	■	■							
							■		
■	■	■							
■	■	■				■			
■	■	■			■	■		■	
					■				
■	■								
■	■								
■	■								
■	■								
							■		
■	■								
■	■					■			
■	■					■		■	
					■				
	■		■						
	■		■						
	■		■						
	■		■						
							■		
	■		■			■			
■				■					
									■

For more detailed information, contact REGINA Technical Department.

Copyright Regina Catene Calibrate s.p.a. - 2020, All rights reserved

APPLICATIONS

Matveyor® ULTOP® CHAINS/ BELTS

	CONVEYED PRODUCTS		PRODUCTS: NANOPITCH (8mm)	LIGHT DUTY SHORT PITCH (½")					LIGHT DUTY (1" PITCH)	
			8300	600 610 300	500 200	HF 510 HF 200	611 RR611	LBP610	1600	1500
FOOD / BEVERAGE / BOTTLING APPLICATIONS	CANS (2-3 PIECES)	Depalletizer		■	■				■	■
		Inliner/combiner							■	■
		Mass conveyors		■	■				■	■
		Accumulation tables		■	■				■	■
		Warmer								
		Infeed packaging machines		■	■				■	■
		Packaging machines	■		■	■	■			
		Packaged products convey	■	■	■	■		■	■	■
	PET BOTTLES	Inliner/combiner							■	
		Mass conveyors		■	■				■	
		Accumulation tables		■	■				■	■
		Warmer								
		Infeed packaging machines		■	■				■	
		Packaging machines	■	■	■	■	■			
		Packaged products convey	■	■	■	■		■	■	■
	GLASS BOTTLES	Depalletizer		■					■	
		Inliner/combiner							■	
		Mass conveyors		■					■	
		Accumulation tables								
		Pasteurizer								
		Infeed packaging machines		■					■	
		Packaging machines	■	■	■	■	■			
		Packaged products convey	■	■		■		■	■	
GLASS MFG.	GLASS BOTTLES	Inliner/combiner							■	
		Mass conveyors		■					■	
		Accumulation tables		■					■	
		Palletizer		■					■	
SPECIAL APPLICATIONS	PHARMACEUTICAL DETERGENT COSMETICS CONTAINERS	Conveyors lines	■	■	■		■		■	■
	BAKERY	Conveyors lines	■	■	■				■	
	PAPER/ CARDBOARD	Conveyors lines		■					■	

Copyright Regina Catene Calibrate s.p.a. - 2020, All rights reserved

PRODUCTS

LIGHT DUTY (1" PITCH)			MEDIUM DUTY (¾" PITCH)		HEAVY DUTY (1" PITCH)			ULTOP® HEAVY DUTY UCC (1 ½" PITCH)		SIDEFLEXING CHAINS (1" PITCH)			HEAVY DUTY RAISED RIB (2" PITCH)	SIDEFL. BELTS (1 ¼" PITCH)
RR1600	RR1500 11100	HF1600 HFS1600	7300	7200	USP USPM	HF USPM HFS USPM	LBP XSPM LBP USPM	UCC	UCC 138 (¾" Pitch)	783M 783T	782M	793T 793M 793L	3125	2556HTB 2556HTB-SR
			■	■										
			■	■				■		■	■			
			■	■				■		■	■			
	■		■	■									■	
													■	
	■		■	■				■						
■									■					
	■	■	■	■	■	■	■	■						■
			■					■		■				
			■					■		■				
	■		■	■										
													■	
	■		■											
■									■					
	■	■	■	■	■	■	■	■						■
			■		■			■				■		
			■		■			■		■		■		
			■		■			■		■				
					■									
													■	
			■		■			■						
■									■					
		■	■		■	■	■	■						■
			■		■			■		■		■		
			■		■			■		■		■		
			■		■								■	
			■		■									
■			■	■					■	■	■			
			■		■			■		■		■		■
			■		■			■						■

For more detailed information, contact REGINA Technical Department.

Copyright Regina Catene Calibrate s.p.a. - 2020, All rights reserved

REGINA CHAIN

PERFORMANCE IN MOTION

REGINA CHAIN

PERFORMANCE IN MOTION

FliteTop®

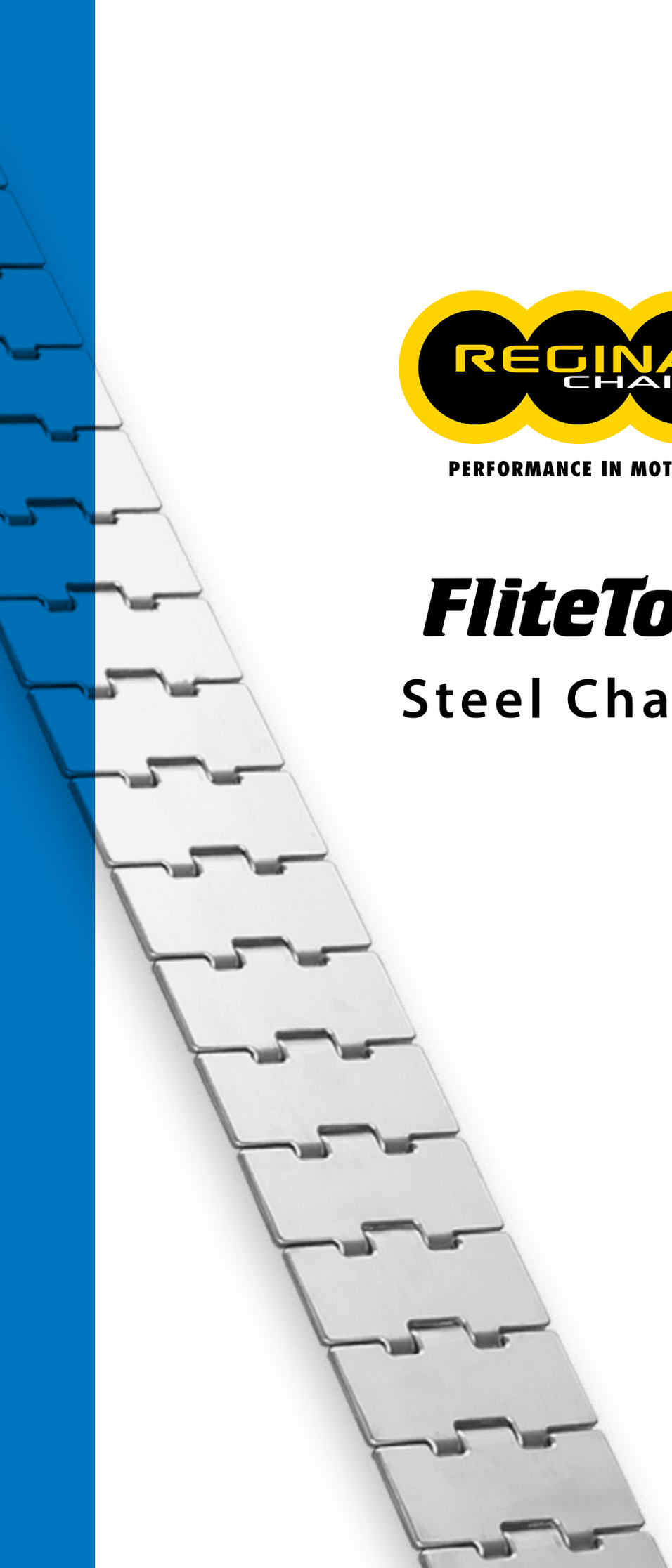

REGINA CHAIN

PERFORMANCE IN MOTION

FliteTop®

Steel Chains

INDUSTRIES AND APPLICATIONS

STAINLESS STEEL CHAINS

Suitable for handling: new glass and returnable glass containers, kegs, crates.

INDUSTRIES

Bottling and canning
Food filling
Glass manufacturing
Consumer goods

APPLICATIONS

Depallettizer
Inliner / combiner
Mass conveyors
Accumulation tables
Infeed / outfeed packaging machines
Packaged product convey

CARBON STEEL CHAINS

Suitable for handling: new glass & metal containers, abrasive components.

INDUSTRIES

Glass manufacturing
Automotive / Mechanical

APPLICATIONS

Inliner / combiner
Mass conveyors
Accumulation tables
Pallettizer

FEATURES

- Premium surface finishing and flatness.
- PRIMA material available (REGINA Cr-Ni based SS special alloy) with improved wear resistance and sliding properties, suitable for high speed bottling lines.
- Hardened pin available (PHD series) for the highest resistance to chain elongation over a long period of time.

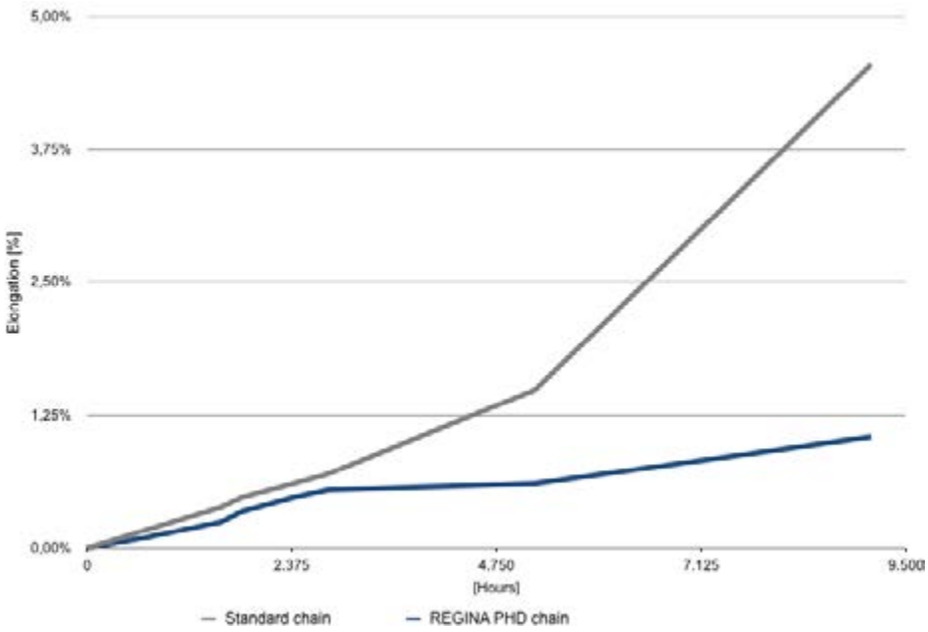

Application conditions

Product conveyed: glass returnable
Test area: uncaser
Dirty environment
Lubrication: water and soap
Conveyor length: 5 mt
Chain speed: 21 m/1' (60.000 b/h)

FliteTop®

Copyright Regina Catene Calibrate s.p.a. - 2020, All rights reserved

SINGLE HINGE
REDUCED PLATE GAP 1,6 mm
INCREASED PIN HARDNESS (PHD 915 SERIES)
SPECIAL XPHD CHAINS FOR PRESSURELESS COMBINERS NEW
PITCH 1 ½" (38,1 mm)
THICKNESS 3 mm (0.118")
HINGE 42 mm (1.654")

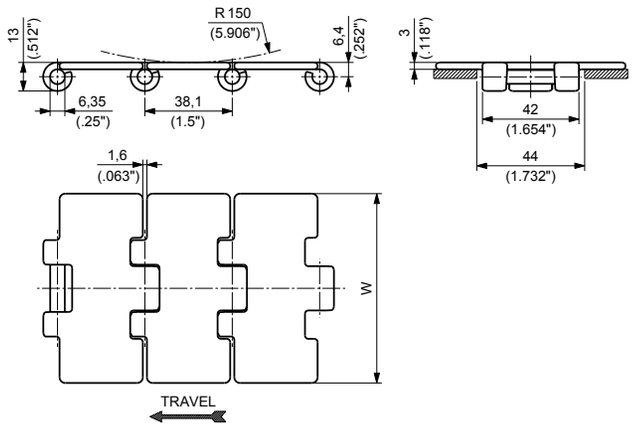

Materials see page 12
Sprockets see pages 119÷126
Applications see page 20

915

MATERIALS Plate	MATERIALS Pin	ITEM DESCRIPTION	PART NUMBER	WIDTH W mm	WIDTH W inch	SURFACE FINISH Ra	POLISHED HINGES	YIELD LOAD AVERAGE N	YIELD LOAD AVERAGE lbs	WEIGHT kg/m	WEIGHT lbs/ft
PRIMA P	AUSTENITIC STAINLESS STEEL	P 915 K 2 ¼	P915KS/000	57,1	2.25	0,3	NO	8500	1,913	2,00	1.34
		P 915 K 2 ½	P915KR/000	63,5	2.50	0,3	NO	8500	1,913	2,14	1.44
		P 915 K 2 ⅝	P915KC/000	66,7	2.63	0,3	NO	8500	1,913	2,21	1.49
		P 915 K 3 ¼	P915KD/000	82,6	3.25	0,3	YES	8500	1,913	2,57	1.72
		P 915 K 83,8	P915KRA/000	83,8	3.30	0,3	YES	8500	1,913	2,60	1.75
		P 915 K 3 ½	P915KE/000	88,9	3.50	0,3	NO	8500	1,913	2,71	1.82
		P 915 K 4	P915KF/000	101,6	4.00	0,3	NO	8500	1,913	2,99	2.00
		P 915 K 4 ½	P915KG/000	114,3	4.50	0,3	NO	8500	1,913	3,28	2.20
		P 915 K 6	P915KH/000	152,4	6.00	0,3	NO	8500	1,913	4,13	2.78
		P 915 K 7 ½	P915KL/000	190,5	7.50	0,3	NO	8500	1,913	4,99	3.35

PHD 915

MATERIALS Plate	MATERIALS Pin	ITEM DESCRIPTION	PART NUMBER	WIDTH W mm	WIDTH W Inch	SURFACE FINISH Ra	POLISHED HINGES	YIELD LOAD AVERAGE N	YIELD LOAD AVERAGE lbs	WEIGHT kg/m	WEIGHT lbs/ft
PRIMA P	HARDENED MARTENSITIC STAINLESS STEEL	NEW XPHD 915 K 3 ¼	XPHD915KD/000	82,6	3.25	0,2	YES	8500	1,913	2,57	1.72
		NEW XPHD 915 K 83,8	XPHD915KRA/000	83,8	3.30	0,2	YES	8500	1,913	2,60	1.75
		PHD 915 K 4 ½	PHD915KG/000	114,3	4.50	0,3	NO	8500	1,913	3,28	2.20
		PHD 915 K 7 ½	PHD915KL/000	190,5	7.50	0,3	NO	8500	1,913	4,99	3.35

Standard packaging:
Rolls of 3,048 m (10 feet)

Copyright Regina Catene Calibrate s.p.a. - 2020, All rights reserved

SINGLE HINGE
REDUCED PLATE GAP (1,6 mm)
PITCH 1 ½" (38,1 mm)
THICKNESS 3 mm (0.118")
HINGE 42 mm (1.654")

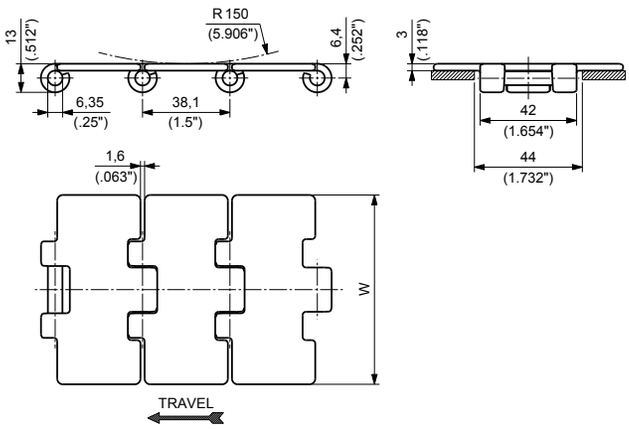

Materials see page 12
Sprockets see pages 119÷126
Applications see page 20

MATERIALS Plate	MATERIALS Pin	ITEM DESCRIPTION	PART NUMBER	WIDTH W mm	WIDTH W inch	SURFACE FINISH Ra	POLISHED HINGES	YIELD LOAD AVERAGE N	YIELD LOAD AVERAGE lbs	WEIGHT kg/m	WEIGHT lbs/ft
CARBON STEEL S	CASE HARDENED STEEL	S 915 K 3 ¼	S915KD/000	82,6	3.25	-	NO	12300	2,765	2,58	1.73
		S 915 K 4	S915KF/000	101,6	4.00	-	NO	12300	2,765	3,01	2.02
		S 915 K 4 ½	S915KG/000	114,3	4.50	-	NO	12300	2,765	3,30	2.22
		S 915 K 6	S915KH/000	152,4	6.00	-	NO	12300	2,765	4,15	2.79
		S 915 K 7 ½	S915KL/000	190,5	7.50	-	NO	12300	2,765	5,02	3.38
FERRITIC STAINLESS STEEL SS-4	AUSTENITIC STAINLESS STEEL	SS 915-4 K 3 ¼	SS915-4KD/000	82,6	3.25	0,3	NO	5800	1,304	2,52	1.69
		SS 915-4 K 83,8	SS915-4KRA/000	83,8	3.30	0,3	NO	5800	1,304	2,55	1.71
		SS 915-4 K 4 ½	SS915-4KG/000	114,3	4.50	0,3	NO	5800	1,304	3,21	2.16
		SS 915-4 K 7 ½	SS915-4KL/000	190,5	7.50	0,3	NO	5800	1,304	4,96	3.33
AUSTENITIC STAINLESS STEEL SS	AUSTENITIC STAINLESS STEEL	SS 915 K 3 ¼	SS915KD/000	82,6	3.25	0,3	NO	5600	1,259	2,57	1.72
		SS 915 K 4	SS915KF/000	101,6	4.00	0,3	NO	5600	1,259	2,99	2.01
		SS 915 K 4 ½	SS915KG/000	114,3	4.50	0,3	NO	5600	1,259	3,28	2.20
		SS 915 K 6	SS915KH/000	152,4	6.00	0,3	NO	5600	1,259	4,13	2.78
		SS 915 K 7 ½	SS915KL/000	190,5	7.50	0,3	NO	5600	1,259	4,99	3.35

Standard packaging:
Rolls of 3,048 m (10 feet)

Copyright Regina Catene Calibrate s.p.a. - 2020, All rights reserved

DOUBLE HINGE
PITCH 1 ½" (38,1 mm)
THICKNESS 3 mm (0.118")
HINGE 80 mm (3.150")

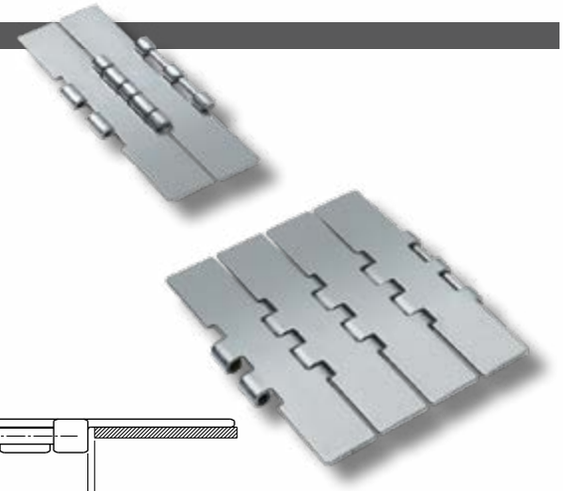

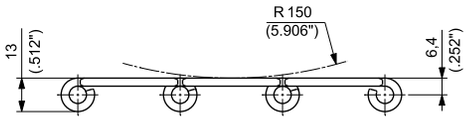

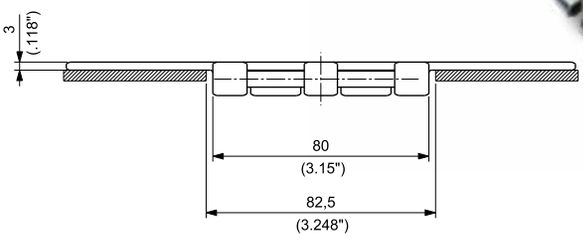

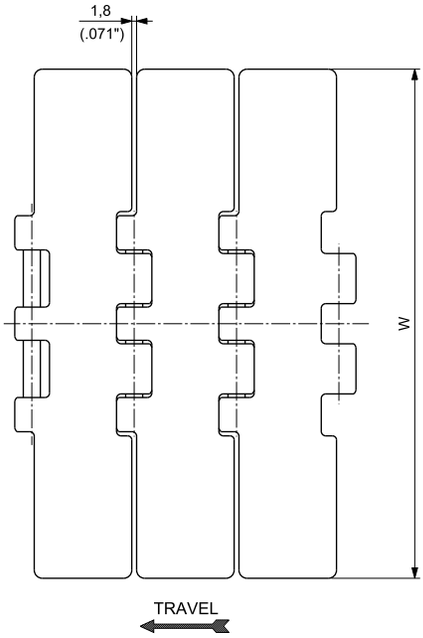

Materials see page 12
Sprockets see pages 127÷130
Applications see page 20

MATERIALS Plate	MATERIALS Pin	ITEM DESCRIPTION	PART NUMBER	WIDTH W mm	WIDTH W inch	SURFACE FINISH Ra	POLISHED HINGES	YIELD LOAD AVERAGE N	YIELD LOAD AVERAGE lbs	WEIGHT kg/m	WEIGHT lbs/ft
CARBON STEEL S	CASE HARDENED STEEL	S 2815 K 7 ½	S2815KL/000	190,5	7.50	0,3	NO	18000	4,046	5,56	3.73
FERRITIC STAINLESS STEEL SS-4	AUSTENITIC STAINLESS STEEL	SS 2815-4 K 7 ½	SS28154KL/000	190,5	7.50	0,3	NO	10300	2,315	5,58	3.75
AUSTENITIC STAINLESS STEEL SS	AUSTENITIC STAINLESS STEEL	SS 2815 K 7 ½	SS2815KL/000	190,5	7.50	0,3	NO	10600	2,383	5,61	3.77
PRIMA P	AUSTENITIC STAINLESS STEEL	P 2815 K 7 ½	P2815KL/000	190,5	7.50	0,3	NO	15000	3,372	5,60	3.75

Standard packaging:
Rolls of 3,048 m (10 feet)

Copyright Regina Catene Calibrate s.p.a. - 2020, All rights reserved

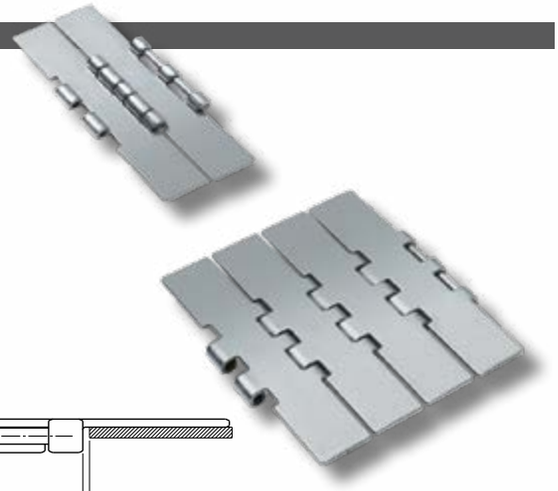

DOUBLE HINGE
INCREASED PIN HARDNESS
PITCH 1 ½" (38,1 mm)
THICKNESS 3 mm (0.118")
HINGE 80 mm (3.150")

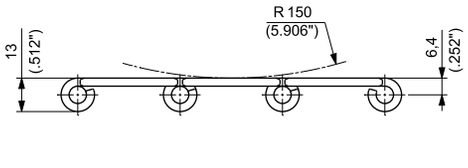

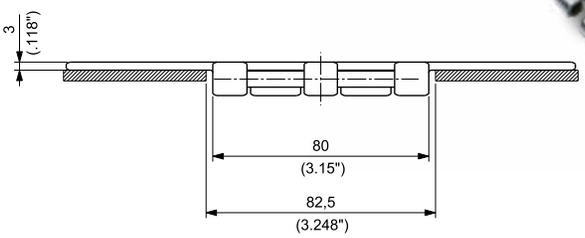

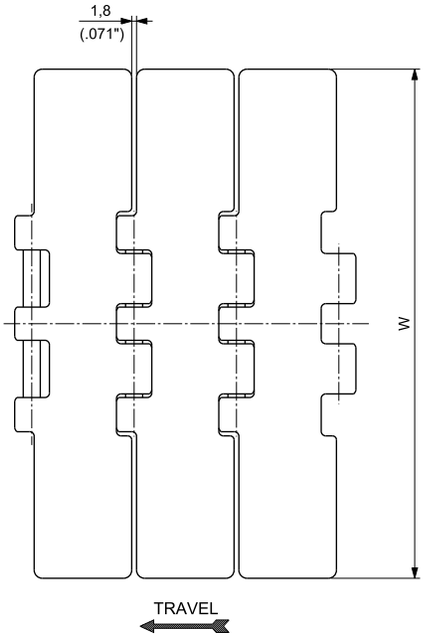

Materials see page 12
Sprockets see pages 127÷130
Applications see page 20

MATERIALS Plate	MATERIALS Pin	ITEM DESCRIPTION	PART NUMBER	WIDTH W mm	WIDTH W inch	SURFACE FINISH Ra	POLISHED HINGES	YIELD LOAD AVERAGE N	YIELD LOAD AVERAGE lbs	WEIGHT kg/m	WEIGHT lbs/ft
PRIMA P	HARDENED MARTENSITIC STAINLESS STEEL	PHD 2815 K 7 ½	PHD2815KL/000	190,5	7.50	0,3	NO	15000	3,372	5,60	3.75

Standard packaging: Rolls of 3,048 m (10 feet)

Copyright Regina Catene Calibrate s.p.a. - 2020, All rights reserved

HEAVY DUTY SINGLE HINGE
INCREASED PIN HARDNESS
PITCH 1 ½" (38,1 mm)
THICKNESS 3 mm (0.118")
HINGE 57 mm (2.244")

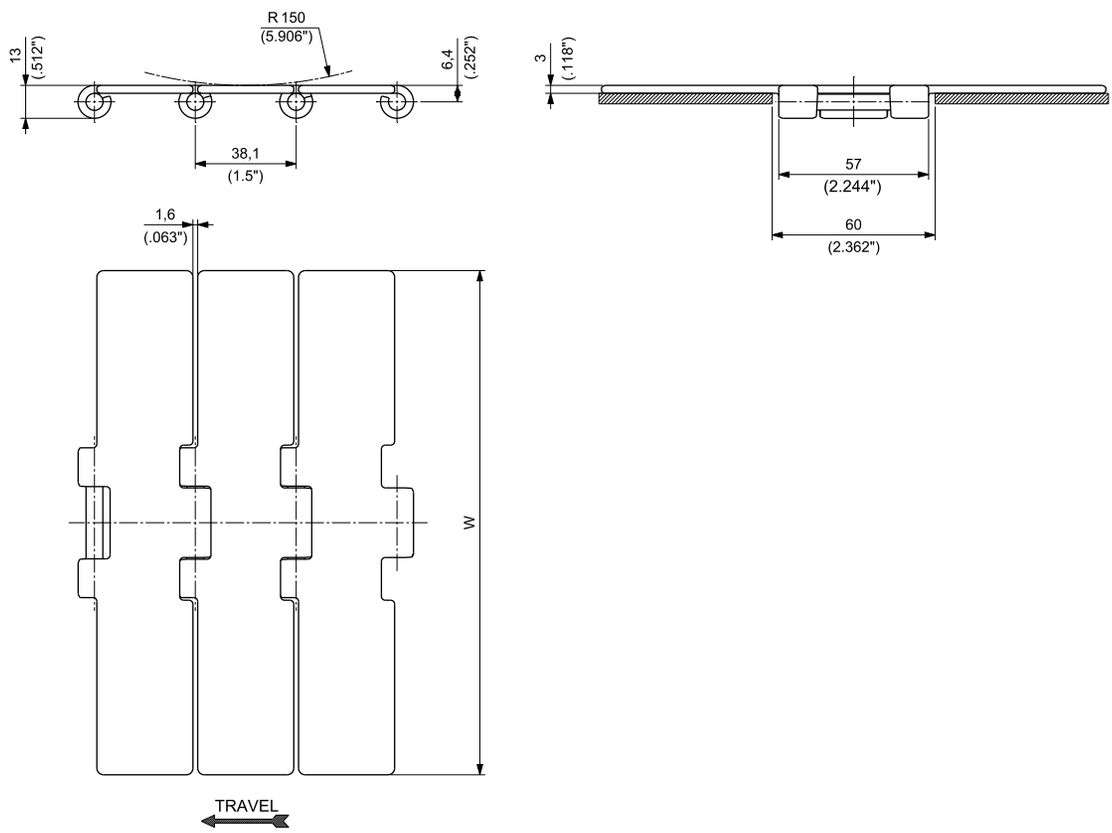

Materials see page 12
Sprockets see pages 131÷132
Applications see page 20

MATERIALS		ITEM DESCRIPTION	PART NUMBER	WIDTH W		SURFACE FINISH	POLISHED HINGES	YIELD LOAD AVERAGE		WEIGHT	
Plate	Pin			mm	inch	Ra		N	lbs	kg/m	lbs/ft
PRIMA P	HARDENED MARTENSITIC STAINLESS STEEL	PHD 9157 K 7 ½	PHD9157KL/000	190,5	7.50	0,3	NO	10500	2,360	5,28	3.55

Standard packaging: Rolls of 3,048 m (10 feet)

Copyright Regina Catene Calibrate s.p.a. - 2020, All rights reserved

MINI HINGE
PITCH 1 ½" (38,1 mm)
THICKNESS 3 mm (0.118")
HINGE 22 mm (0.866")

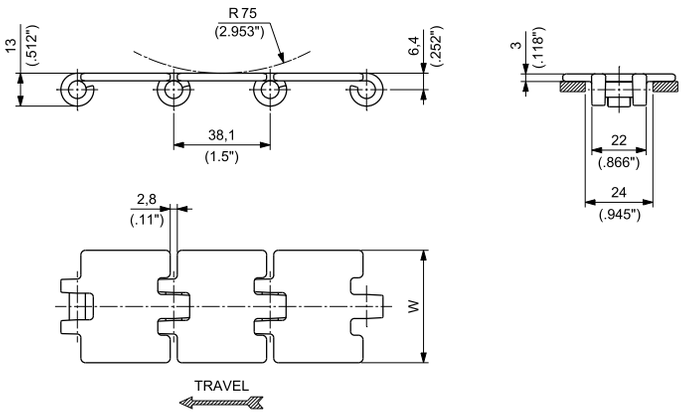

Materials see page 12
Sprockets see pages 133÷134
Applications see page 20

MATERIALS		ITEM DESCRIPTION	PART NUMBER	WIDTH W		SURFACE FINISH	POLISHED HINGES	YIELD LOAD AVERAGE		WEIGHT	
Plate	Pin			mm	inch	Ra		N	lbs	kg/m	lbs/ft
PRIMA P	AUSTENITIC STAINLESS STEEL	P 803 K 1 ¼	P803KPA/000	31,8	1.25	0,3	NO	4100	922	1,06	0.71
		P 803 K 1 ¾	P803KFA/000	44,5	1.75	0,3	NO	4100	922	1,33	0.90

Standard packaging: Rolls of 3,048 m (10 feet)

Copyright Regina Catene Calibrate s.p.a. - 2020, All rights reserved

BEVEL
PITCH 1 ½" (38,1 mm)
THICKNESS 3 mm (0.118")
HINGE 43 mm (1.693")

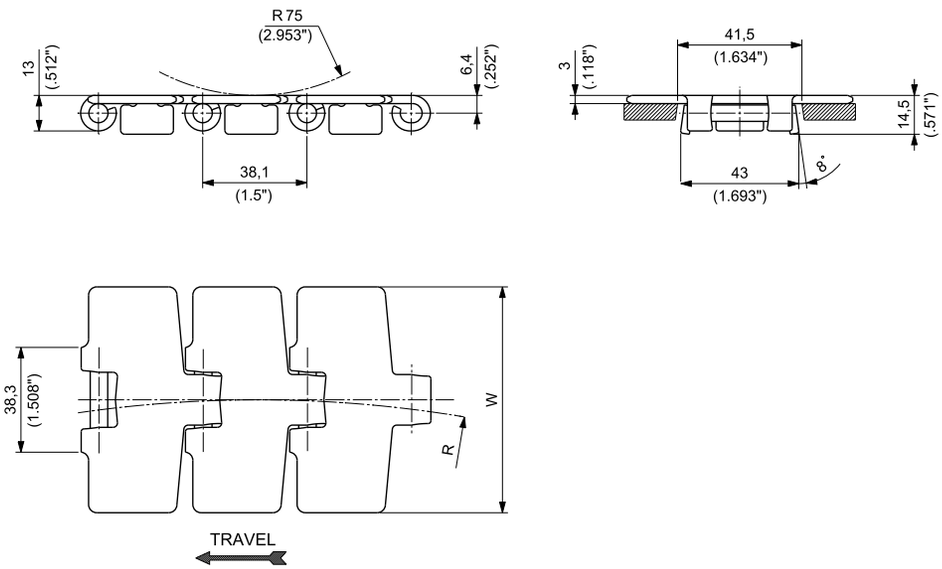

Materials see page 12
Sprockets see pages 134÷137
Corner tracks see page 325
Applications see page 20

MATERIALS Plate	MATERIALS Pin	ITEM DESCRIPTION	PART NUMBER	WIDTH W mm	WIDTH W inch	SURFACE FINISH Ra	POLISHED HINGES	SIDEFLEXING RADIUS R mm	SIDEFLEXING RADIUS R inch	YIELD LOAD AVERAGE N	YIELD LOAD AVERAGE lbs	WEIGHT kg/m	WEIGHT lbs/ft
CARBON STEEL S	CASE HARDENED STEEL	S 881 K 3 ¼	S881KD/000	82,6	3.25	-	NO	457,2	18	11600	2,608	2,74	1.84
		S 881 K 4 ½	S881KG/000	114,3	4.50	-	NO	609,6	24	11600	2,608	3,37	2.27
		S 881 K 7 ½	S881KL/000	190,5	7.50	-	NO	609,6	24	11600	2,608	3,78	2.54
AUSTENITIC STAINLESS STEEL SS	AUSTENITIC STAINLESS STEEL	SS 881 K 3 ¼	SS881KD/000	82,6	3.25	0,3	NO	457,2	18	5600	1,259	2,76	1.85
		SS 881 K 4 ½	SS881KG/000	114,3	4.50	0,3	NO	609,6	24	5600	1,259	3,40	2.29
		SS 881 K 7 ½	SS881KL/000	190,5	7.50	0,3	NO	609,6	24	5600	1,259	4,82	3.24

Standard packaging:
Rolls of 3,048 m (10 feet)

Copyright Regina Catene Calibrate s.p.a. - 2020, All rights reserved

BEVEL
REDUCED PLATE GAP
PITCH 1 ½" (38,1 mm)
THICKNESS 3 mm (0.118")
HINGE 43 mm (1.693")

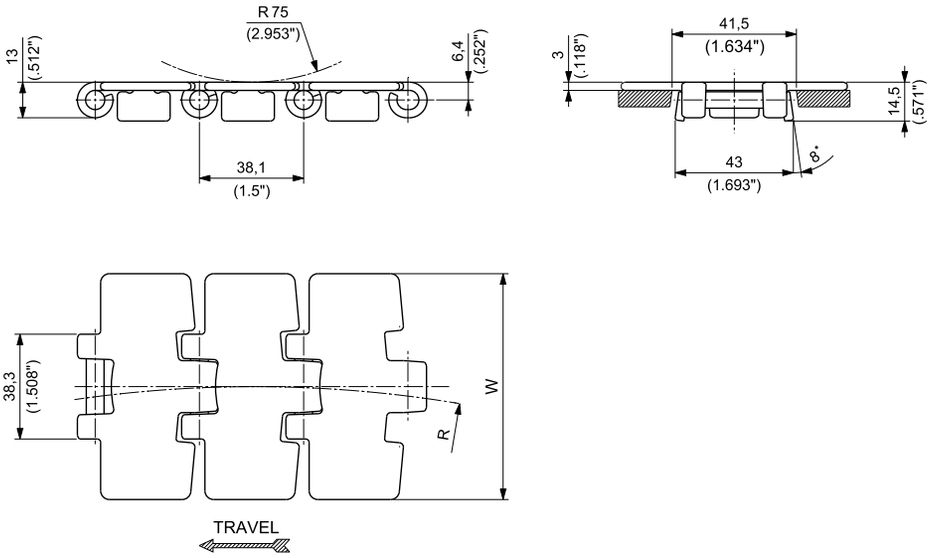

Materials see page 12
Sprockets see pages 134÷137
Corner tracks see page 325
Applications see page 20

MATERIALS Plate	MATERIALS Pin	ITEM DESCRIPTION	PART NUMBER	WIDTH W mm	WIDTH W inch	SURFACE FINISH Ra	POLISHED HINGES	SIDEFLEXING RADIUS R mm	SIDEFLEXING RADIUS R inch	YIELD LOAD AVERAGE N	YIELD LOAD AVERAGE lbs	WEIGHT kg/m	WEIGHT lbs/ft
PRIMA P	AUSTENITIC STAINLESS STEEL	P 981 K 3 ¼	P981KD/000	82,6	3.25	0,3	NO	457,2	18	8000	1,798	2,74	1.84
		P 981 K 83,8	P981KRA/000	83,8	3.30	0,3	NO	457,2	18	8000	1,798	2,77	1.86
		P 981 K 4 ½	P981KG/000	114,3	4.50	0,3	NO	609,6	24	8000	1,798	3,38	2.27
		P 981 K 7 ½	P981KL/000	190,5	7.50	0,3	NO	609,6	24	8000	1,798	4,82	3.24

Standard packaging: Rolls of 3,048 m (10 feet)

Copyright Regina Catene Calibrate s.p.a. - 2020, All rights reserved

TAB
PITCH 1 ½" (38,1 mm)
THICKNESS 3 mm (0.118")
HINGE 43 mm (1.693")

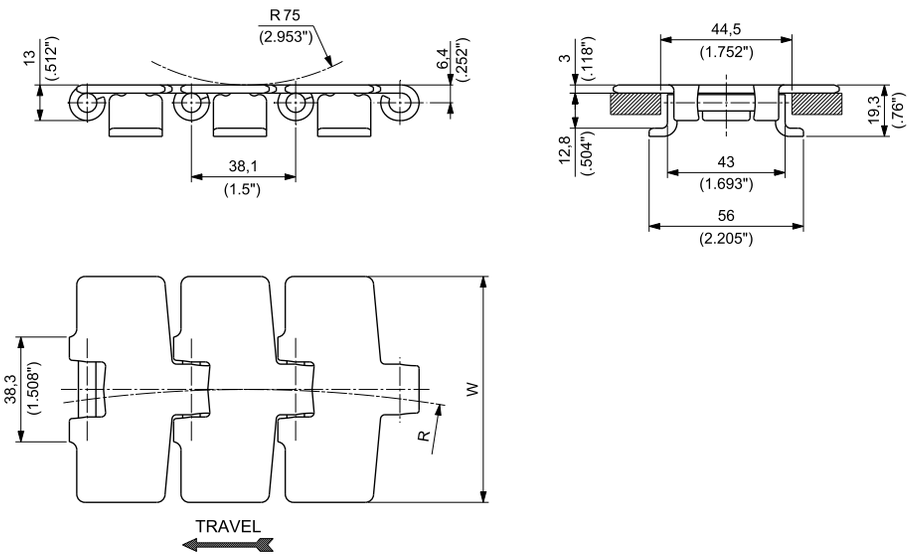

Materials see page 12
Sprockets see pages 134÷139
Corner tracks see page 320
Applications see page 20

MATERIALS Plate	MATERIALS Pin	ITEM DESCRIPTION	PART NUMBER	WIDTH W mm	WIDTH W inch	SURFACE FINISH Ra	POLISHED HINGES	SIDEFLEXING RADIUS R mm	SIDEFLEXING RADIUS R inch	YIELD LOAD AVERAGE N	YIELD LOAD AVERAGE lbs	WEIGHT kg/m	WEIGHT lbs/ft
CARBON STEEL S	CASE HARDENED STEEL	S 881T K 3 ¼	S881TKD/000	82,6	3.25	-	NO	457,2	18	11600	2,608	2,96	1.99
		S 881T K 4 ½	S881TKG/000	114,3	4.50	-	NO	609,6	24	11600	2,608	3,60	2.42
		S 881T K 7 ½	S881TKL/000	190,5	7.50	-	NO	609,6	24	11600	2,608	5,01	3.36
AUSTENITIC STAINLESS STEEL SS	AUSTENITIC STAINLESS STEEL	SS 881T K 3 ¼	SS881TKD/000	82,6	3.25	0,3	NO	457,2	18	5600	1,259	2,99	2.01
		SS 881T K 4 ½	SS881TKG/000	114,3	4.50	0,3	NO	609,6	24	5600	1,259	3,63	2.44
		SS 881T K 7 ½	SS881TKL/000	190,5	7.50	0,3	NO	609,6	24	5600	1,259	5,05	3.39

Standard packaging:
Rolls of 3,048 m (10 feet)

Copyright Regina Catene Calibrate s.p.a. - 2020, All rights reserved

TAB
REDUCED PLATE GAP
PITCH 1 ½" (38,1 mm)
THICKNESS 3 mm (0.118")
HINGE 43 mm (1.693")

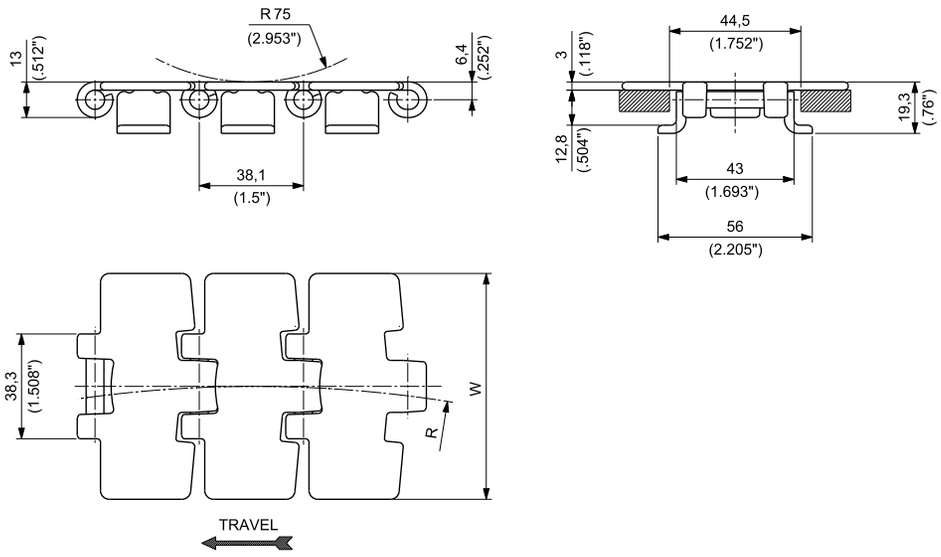

Materials see page 12
Sprockets see pages 134÷139
Corner tracks see page 320
Applications see page 20

MATERIALS Plate	MATERIALS Pin	ITEM DESCRIPTION	PART NUMBER	WIDTH W mm	WIDTH W inch	SURFACE FINISH Ra	POLISHED HINGES	SIDEFLEXING RADIUS R mm	SIDEFLEXING RADIUS R inch	YIELD LOAD AVERAGE N	YIELD LOAD AVERAGE lbs	WEIGHT kg/m	WEIGHT lbs/ft
PRIMA P	AUSTENITIC STAINLESS STEEL	P 981T K 3 ¼	P981TKD/000	82,6	3.25	0,3	NO	457,2	18	8000	1,798	2,97	2.00
		P 981T K 83,8	P981TKRA/000	83,8	3.30	0,3	NO	457,2	18	8000	1,798	2,99	2.01
		P 981T K 4 ½	P981TKG/000	114,3	4.50	0,3	NO	609,6	24	8000	1,798	3,61	2.43
		P 981T K 7 ½	P981TKL/000	190,5	7.50	0,3	NO	609,6	24	8000	1,798	5,05	3.40

Standard packaging: Rolls of 3,048 m (10 feet)

Copyright Regina Catene Calibrate s.p.a. - 2020, All rights reserved

MAGNETIC
REDUCED PLATE GAP
INCREASED PIN HARDNESS (PHD 981M SERIES)
SPECIAL XPHD CHAINS FOR PRESSURELESS COMBINERS NEW
PITCH 1 ½" (38,1 mm)
THICKNESS 3 mm (0.118")
HINGE 42 mm (1.654")

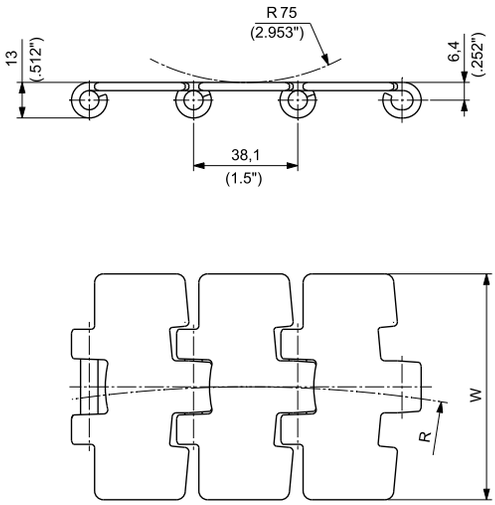

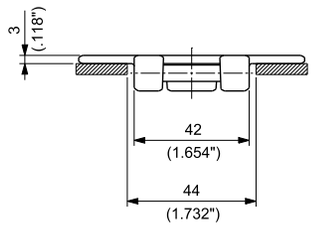

Materials see page 12
Sprockets see pages 119÷126
Corner tracks see page 280
Applications see page 20

981M

MATERIALS Plate	MATERIALS Pin	ITEM DESCRIPTION	PART NUMBER	WIDTH W mm	WIDTH W inch	SURFACE FINISH Ra	POLISHED HINGES	SIDEFLEXING RADIUS R mm	SIDEFLEXING RADIUS R inch	YIELD LOAD AVERAGE N	YIELD LOAD AVERAGE lbs	WEIGHT kg/m	WEIGHT lbs/ft
FERRITIC STAINLESS STEEL SS-4	AUSTENITIC STAINLESS STEEL	SS 981M-4 K 3 ¼	SS981M4KD/000	82,6	3.25	0,3	YES	500	19.69	5400	1,214	2,43	1.63
		SS 981M-4 K 83,8	SS981M4KRA/000	83,8	3.30	0,3	YES	500	19.69	5400	1,214	2,45	1.63
		SS 981M-4 K 4 ½	SS981M4KG/000	114,3	4.50	0,3	YES	500	19.69	5400	1,214	3,05	2.05
		SS 981M-4 K 7 ½	SS981M4KL/000	190,5	7.50	0,3	YES	500	19.69	5400	1,214	4,43	2.98
PRIMA P	AUSTENITIC STAINLESS STEEL	P 981M K 3 ¼	P981MKD/000	82,6	3.25	0,3	YES	500	19.69	8500	1,911	2,44	1.64
		P 981M K 83,8	P981MKRA/000	83,8	3.30	0,3	YES	500	19.69	8500	1,911	2,47	1.66
		P 981M K 4 ½	P981MKG/000	114,3	4.50	0,3	YES	500	19.69	8500	1,911	3,07	2.06
		P 981M K 7 ½	P981MKL/000	190,5	7.50	0,3	YES	500	19.69	8500	1,911	4,47	3.01

PHD 981M

MATERIALS Plate	MATERIALS Pin	ITEM DESCRIPTION	PART NUMBER	WIDTH W mm	WIDTH W inch	SURFACE FINISH Ra	POLISHED HINGES	SIDEFLEXING RADIUS R mm	SIDEFLEXING RADIUS R inch	YIELD LOAD AVERAGE N	YIELD LOAD AVERAGE lbs	WEIGHT kg/m	WEIGHT lbs/ft
PRIMA P	HARDENED MARTENSITIC STAINLESS STEEL	NEW XPHD 981M K 3 ¼	XPHD981MKD/000	82,6	3.25	0,2	YES	500	19.69	8500	1,911	2,44	1.64
		NEW XPHD 981M K 83,8	XPHD981MKRA/000	83,8	3.30	0,2	YES	500	19.69	8500	1,911	2,47	1.66
		PHD 981M K 4 ½	PHD981MKG/000	114,3	4.50	0,3	YES	500	19.69	8500	1,911	3,07	2.06
		PHD 981M K 7 ½	PHD981MKL/000	190,5	7.50	0,3	YES	500	19.69	8500	1,911	4,47	3.01

Standard packaging:
Rolls of 3,048 m (10 feet)

Copyright Regina Catene Calibrate s.p.a. - 2020, All rights reserved

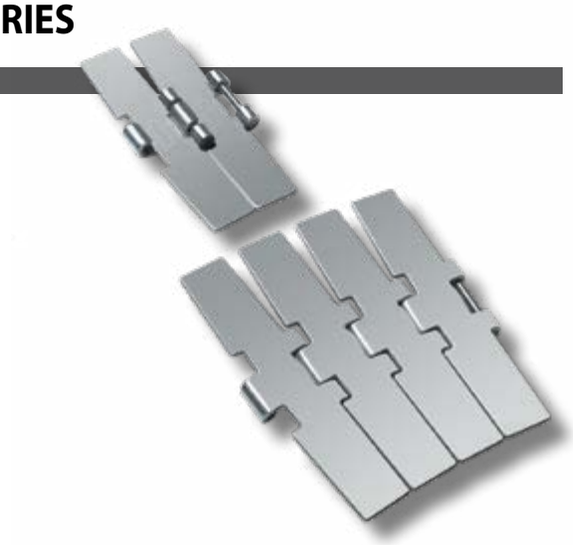

MAGNETIC
HEAVY DUTY SINGLE HINGE
INCREASED PIN HARDNESS
PITCH 1 ½" (38,1 mm)
THICKNESS 3 mm (0.118")
HINGE 57 mm (2.244")

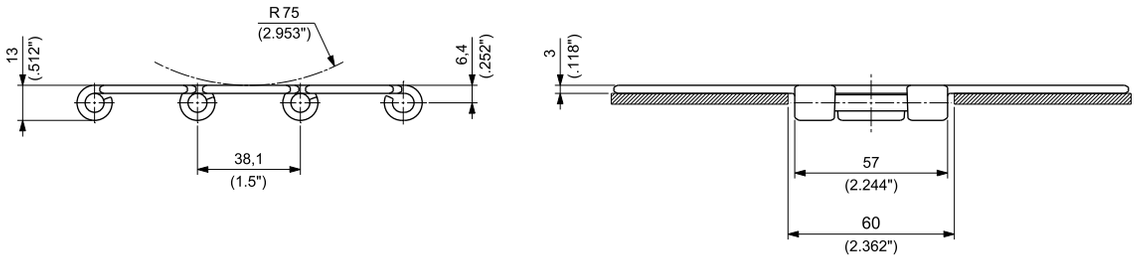

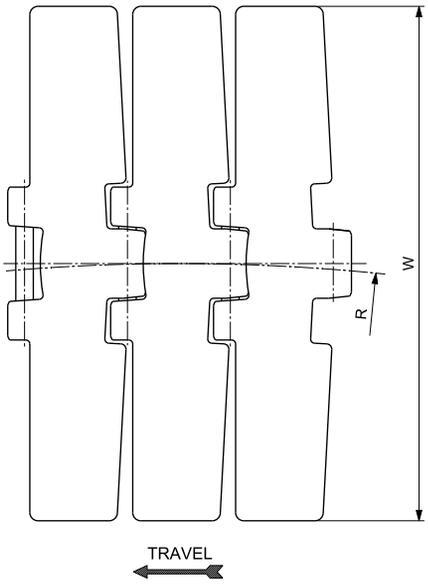

Materials see page 12
Sprockets see pages 131÷132
Corner tracks see page 280
Applications see page 20

MATERIALS Plate	MATERIALS Pin	ITEM DESCRIPTION	PART NUMBER	WIDTH W mm	WIDTH W inch	SURFACE FINISH Ra	POLISHED HINGES	SIDEFLEXING RADIUS R mm	SIDEFLEXING RADIUS R inch	YIELD LOAD AVERAGE N	YIELD LOAD AVERAGE lbs	WEIGHT kg/m	WEIGHT lbs/ft
PRIMA P	HARDENED MARTENSITIC STAINLESS STEEL	PHD 9857M K 7 ½	PHD9857MKL/000	190,5	7.50	0,3	YES	750	29.53	10500	2,360	4,97	3.34

Standard packaging: Rolls of 3,048 m (10 feet)

Copyright Regina Catene Calibrate s.p.a. - 2020, All rights reserved

TAB
REDUCED SIDEFLEXING RADIUS
PITCH 1 ½" (38,1 mm)
THICKNESS 3 mm (0.118")
HINGE 43 mm (1.693")

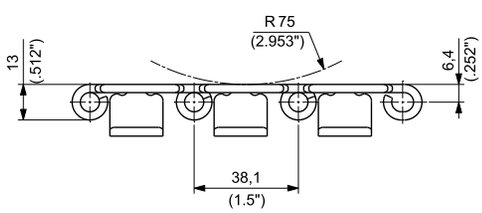

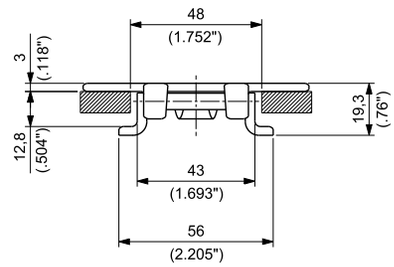

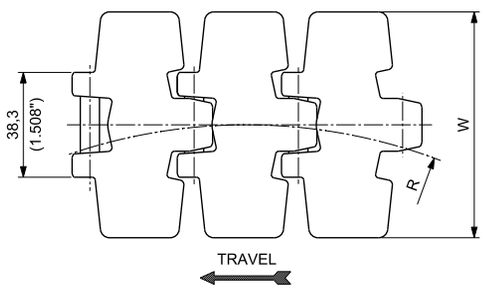

Materials see page 12
Sprockets see pages 134÷139
Corner tracks see page 320
Applications see page 20

MATERIALS Plate	MATERIALS Pin	ITEM DESCRIPTION	PART NUMBER	WIDTH W mm	WIDTH W inch	SURFACE FINISH Ra	POLISHED HINGES	SIDEFLEXING RADIUS R mm	SIDEFLEXING RADIUS R inch	YIELD LOAD AVERAGE N	YIELD LOAD AVERAGE lbs	WEIGHT kg/m	WEIGHT lbs/ft
AUSTENITIC STAINLESS STEEL SS	AUSTENITIC STAINLESS STEEL	SS 982T K 3 ¼	SS982TKD/000	82,6	3.25	0,3	NO	200	7.87	5000	1,125	3,00	2.02

Standard packaging: Rolls of 3,048 m (10 feet)

Copyright Regina Catene Calibrate s.p.a. - 2020, All rights reserved

REGINA CHAIN

PERFORMANCE IN MOTION

FliteTop®

Rubberized Surface Steel Chains

SINGLE HINGE
PLATE GAP 1,6 mm
INCREASED PIN HARDNESS
PITCH 1 ½" (38,1 mm)
THICKNESS 3 mm (0.118")
HINGE 42 mm (1.654")

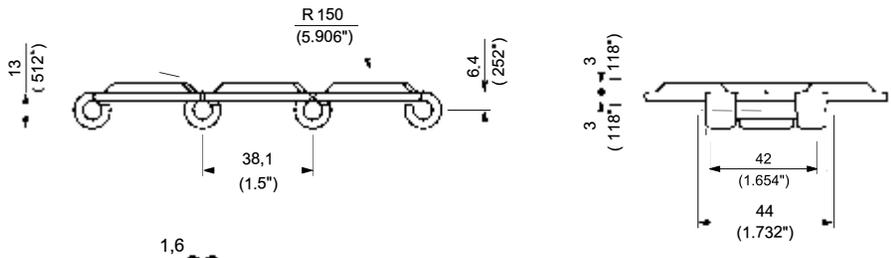

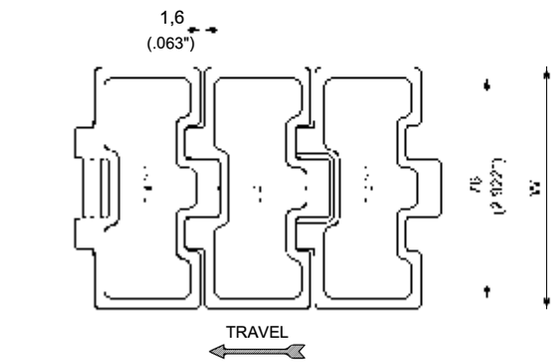

K 3¼ - K 4½

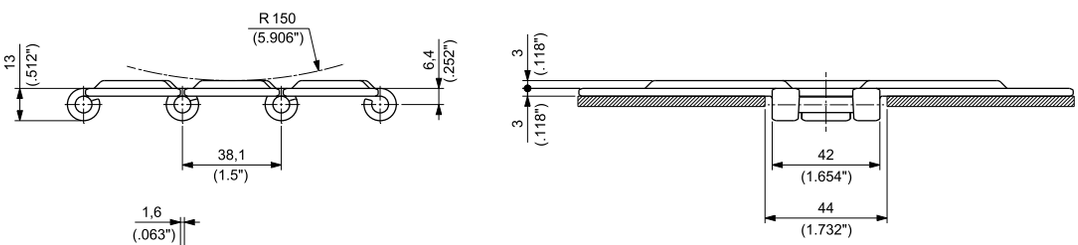

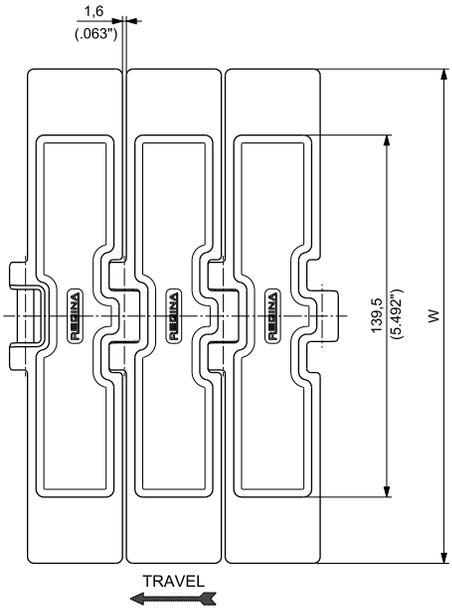

K 7 ½

Materials see page 12
Sprockets see pages 119÷126
Applications see page 20

MATERIALS			ITEM DESCRIPTION	PART NUMBER	WIDTH W		POLISHED HINGES	YIELD LOAD AVERAGE		WEIGHT	
Plate	Pin	Rubber			mm	inch		N	lbs	kg/m	lbs/ft
PRIMA P	HARDENED MARTENSITIC STAINLESS STEEL	NBR Hardness: 70 ShA	PHDG 915 K 3 ¼	PHDG915KD/000	82,6	3.25	YES	8500	1,911	2,57	1.73
			PHDG 915 K 4 ½	PHDG915KG/000	114,3	4.50	NO	8500	1,911	3,28	2.20
			PHDG 915 K 7 ½	PHDG915KL/000	190,5	7.50	NO	8500	1,911	4,99	3.35

Standard packaging: Rolls of 3,048 m (10 feet)

Copyright Regina Catene Calibrate s.p.a. - 2020, All rights reserved

DOUBLE HINGE
INCREASED PIN HARDNESS
PITCH 1 ½" (38,1 mm)
THICKNESS 3 mm (0.118")
HINGE 80 mm (3.150")

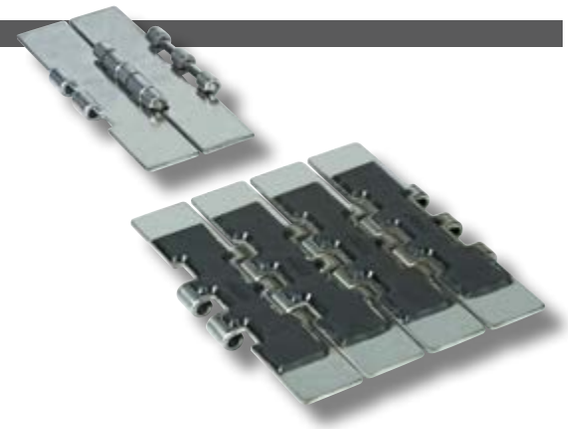

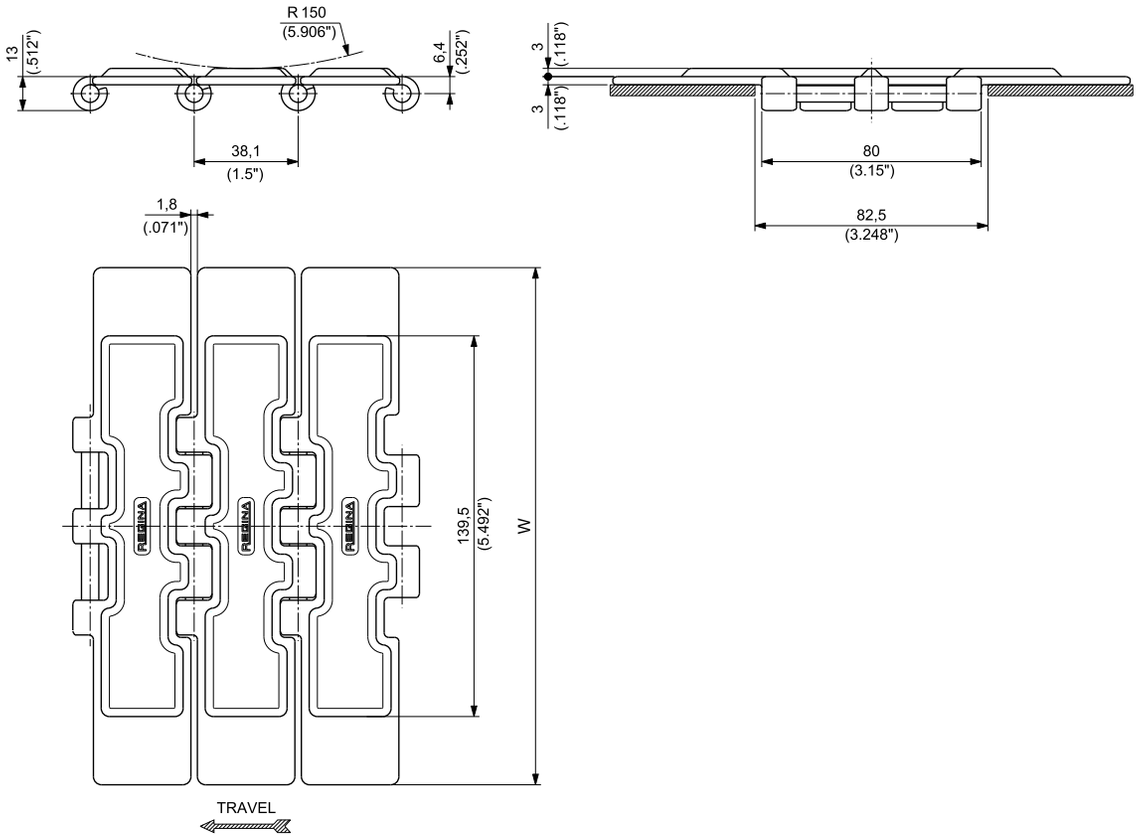

Materials see page 12
Sprockets see pages 127÷130
Applications see page 20

MATERIALS			ITEM DESCRIPTION	PART NUMBER	WIDTH W		POLISHED HINGES	YIELD LOAD AVERAGE		WEIGHT	
Plate	Pin	Rubber			mm	inch		N	lbs	kg/m	lbs/ft
PRIMA P	HARDENED MARTENSITIC STAINLESS STEEL	NBR Hardness: 70 ShA	PHDG 2815 K 7 ½	PHDG2815KL/000	190,5	7.50	NO	15000	3,372	5,60	3.75

Standard packaging: Rolls of 3,048 m (10 feet)

Copyright Regina Catene Calibrate s.p.a. - 2020, All rights reserved

HEAVY DUTY SINGLE HINGE
INCREASED PIN HARDNESS
PITCH 1 ½" (38,1 mm)
THICKNESS 3 mm (0.118")
HINGE 57 mm (2.244")

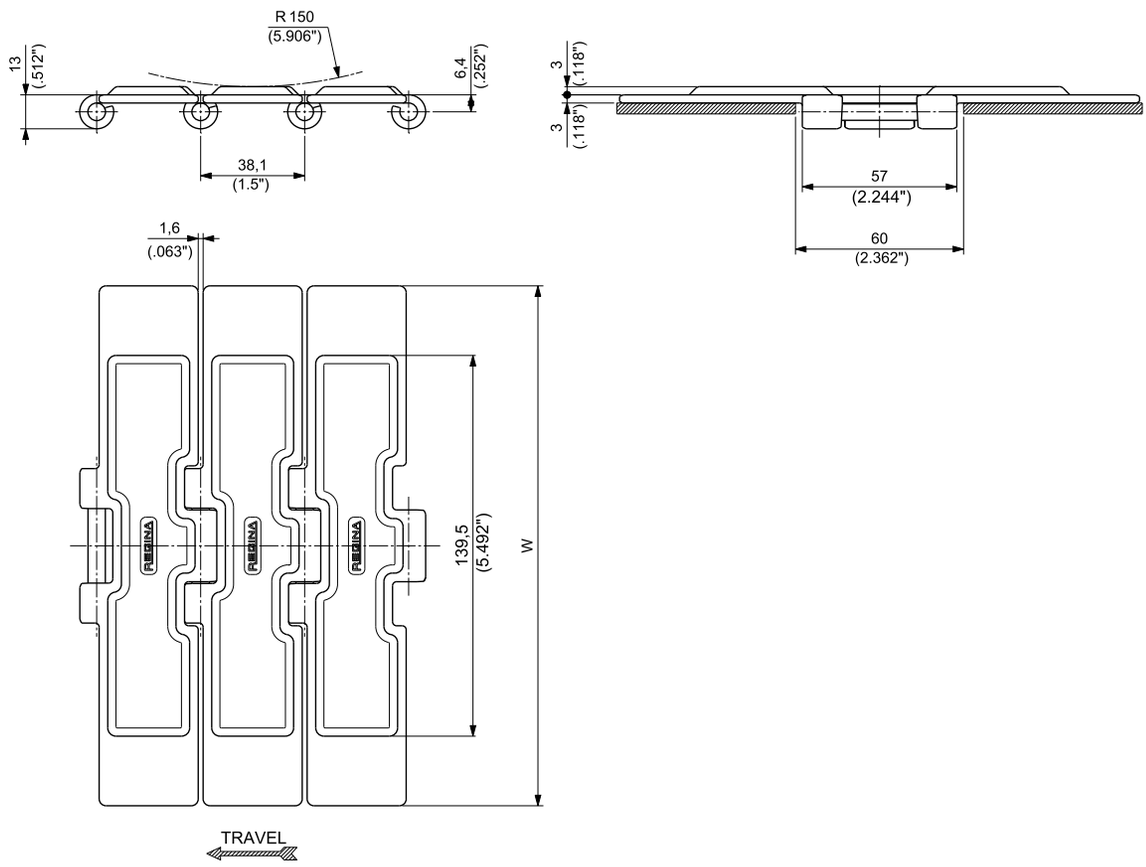

Materials see page 12
Sprockets see pages 131÷132
Applications see page 20

MATERIALS			ITEM DESCRIPTION	PART NUMBER	WIDTH W		POLISHED HINGES	YIELD LOAD AVERAGE		WEIGHT	
Plate	Pin	Rubber			mm	inch		N	lbs	kg/m	lbs/ft
PRIMA P	HARDENED MARTENSITIC STAINLESS STEEL	NBR Hardness: 70 ShA	PHDG 9157 K 7 ½	PHDG9157KL/000	190,5	7.50	NO	10500	2,360	5,28	3.55

Standard packaging: Rolls of 3,048 m (10 feet)

Copyright Regina Catene Calibrate s.p.a. - 2020, All rights reserved

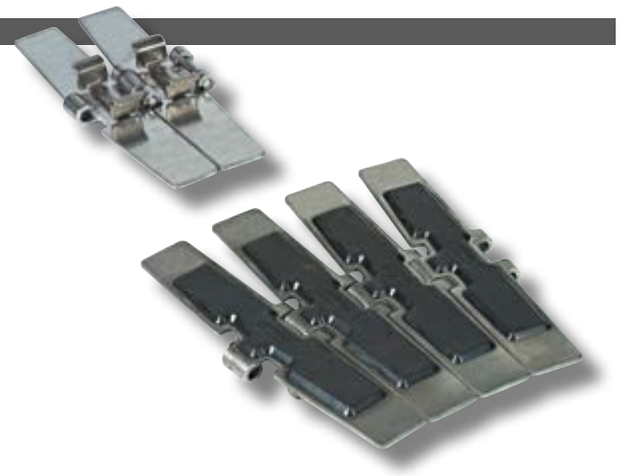

TAB
REDUCED PLATE GAP
INCREASED PIN HARDNESS
PITCH 1 ½" (38,1 mm)
THICKNESS 3 mm (0.118")
HINGE 43 mm (1.693")

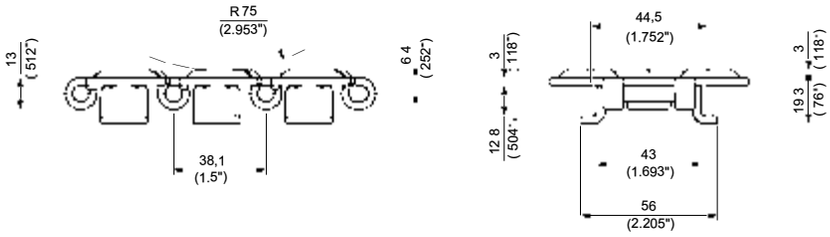

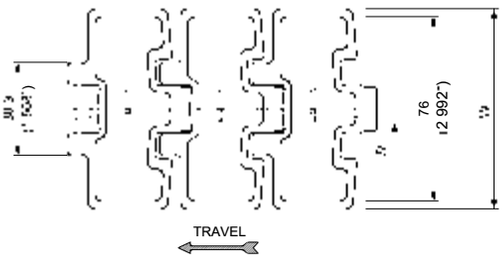

K 3¼

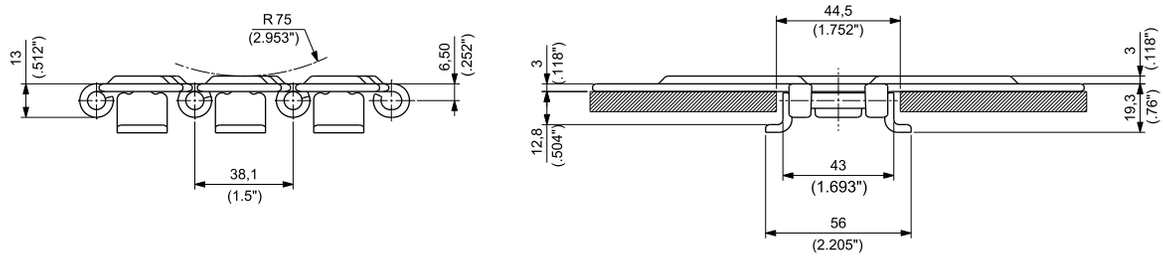

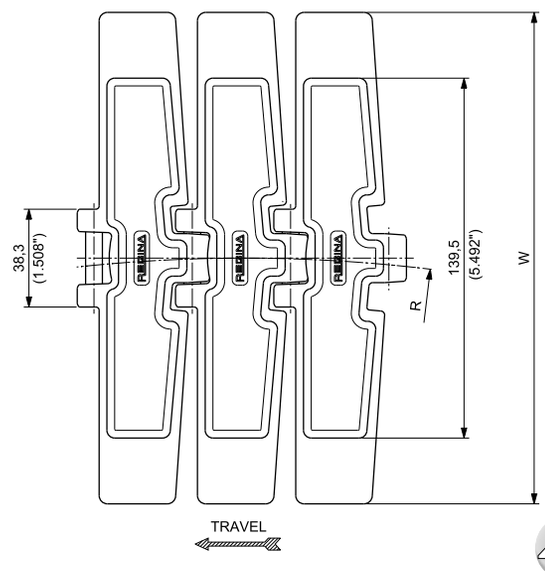

K 7 ½

Materials see page 12
Sprockets see pages 134÷137
Corner tracks see page 320
Applications see page 20

MATERIALS			ITEM DESCRIPTION	PART NUMBER	WIDTH W		POLISHED HINGES	SIDEFLEXING RADIUS R		YIELD LOAD AVERAGE		WEIGHT	
Plate	Pin	Rubber			mm	inch		mm	inch	N	lbs	kg/m	lbs/ft
PRIMA P	HARDENED MARTENSITIC STAINLESS STEEL	NBR Hardness: 70 ShA	PHDG 981T K 3 ¼	PHDG981TKD/0000	82,6	3.25	NO	457,2	18	8000	1,798	2,97	2.00
			PHDG 981T K 7 ½	PHDG981TKL/000	190,5	7.50	NO	609,6	24	8000	1,798	5,06	3.40

Standard packaging: Rolls of 3,048 m (10 feet)

Copyright Regina Catene Calibrate s.p.a. - 2020, All rights reserved

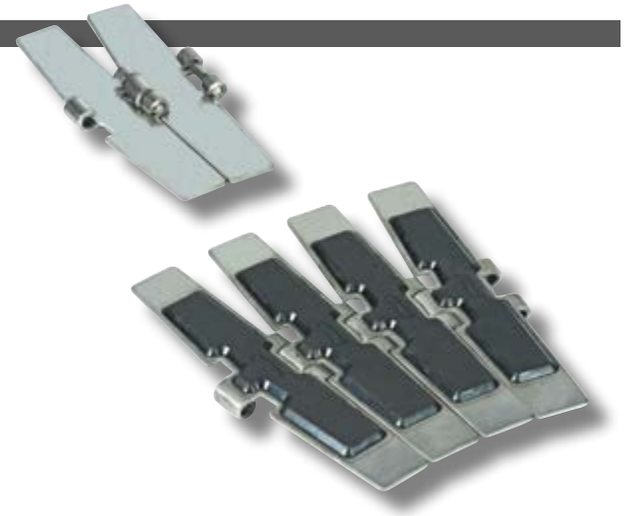

MAGNETIC
REDUCED PLATE GAP
INCREASED PIN HARDNESS
PITCH 1 ½" (38,1 mm)
THICKNESS 3 mm (0.118")
HINGE 42 mm (1.654")

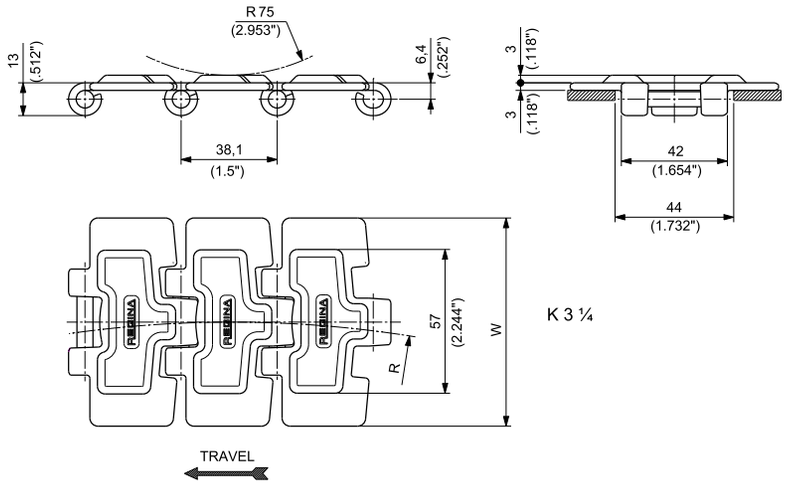

K 3 ¼

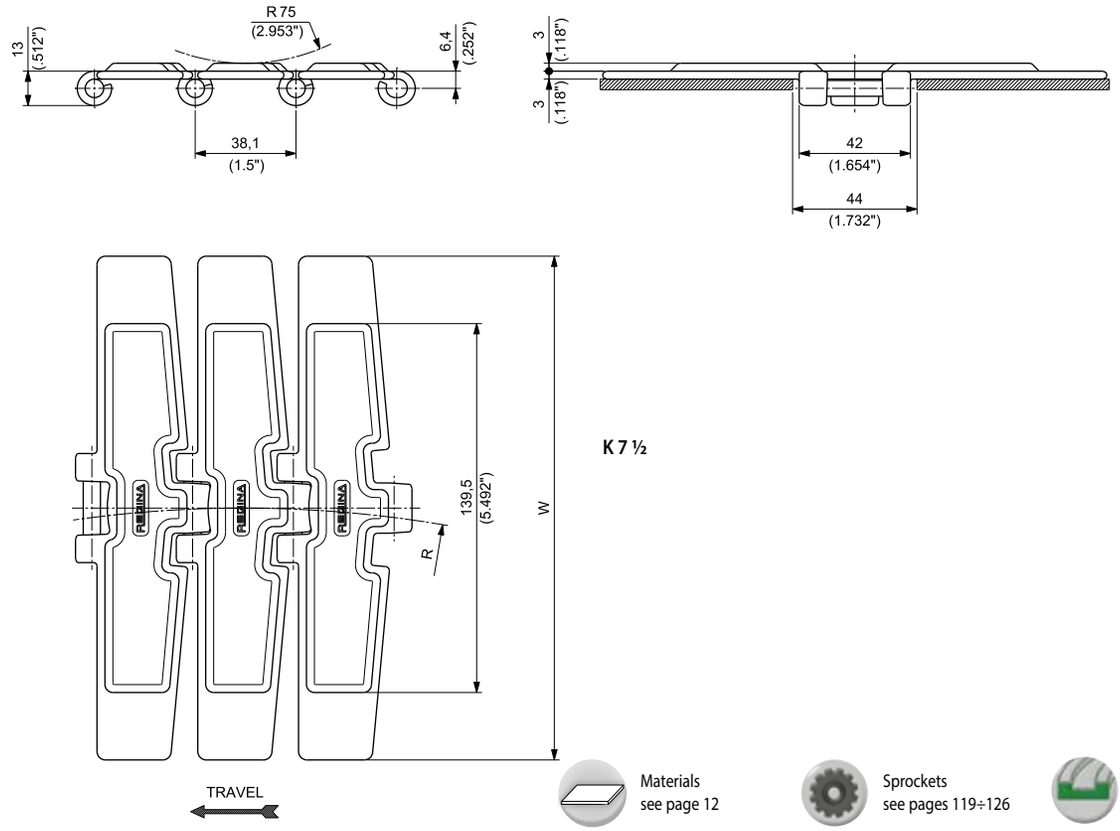

K 7 ½

Materials see page 12
Sprockets see pages 119÷126
Corner tracks see page 280
Applications see page 20

MATERIALS			ITEM DESCRIPTION	PART NUMBER	WIDTH W		POLISHED HINGES	SIDEFLEXING RADIUS R		YIELD LOAD AVERAGE		WEIGHT	
Plate	Pin	Rubber			mm	inch		mm	inch	N	lbs	kg/m	lbs/ft
PRIMA P	HARDENED MARTENSITIC STAINLESS STEEL	NBR Hardness: 70 ShA	PHDG 981M K 3 ¼	PHDG981MKD/000	82,6	3.25	YES	500	19,69	8500	1,911	2,45	1.65
			PHDG 981M K 7 ½	PHDG981MKL/000	190,5	7.50	YES	500	19,69	8500	1,911	4,47	3.01

Standard packaging:
Rolls of 3,048 m (10 feet)

Copyright Regina Catene Calibrate s.p.a. - 2020, All rights reserved

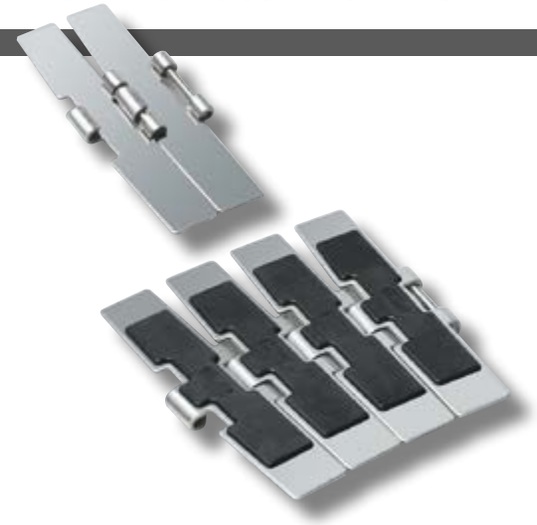

MAGNETIC
HEAVY DUTY SINGLE HINGE
INCREASED PIN HARDNESS
PITCH 1 ½" (38,1 mm)
THICKNESS 3 mm (0.118")
HINGE 57 mm (2.244")

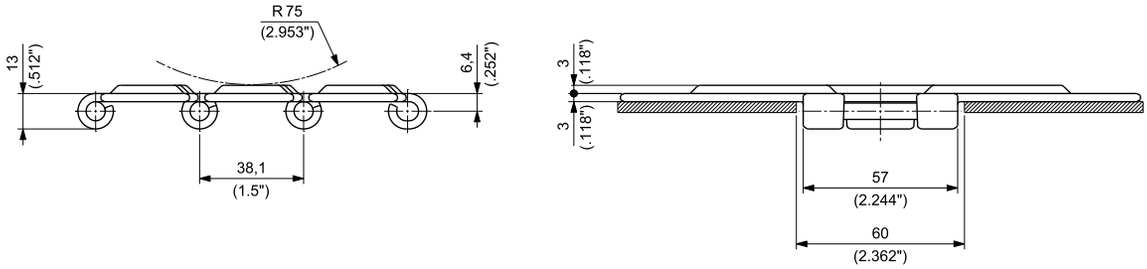

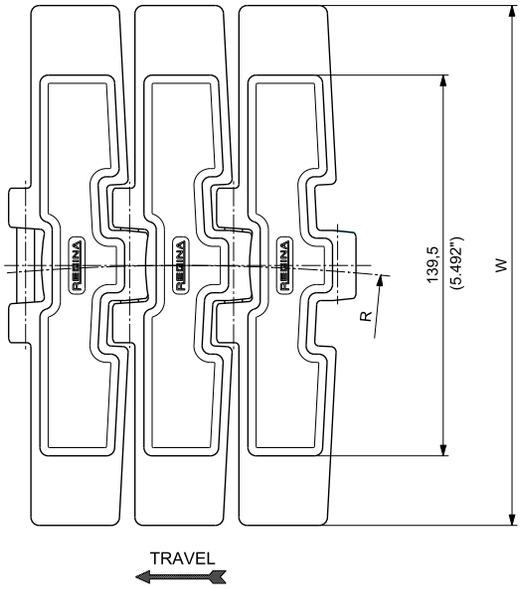

Materials see page 12
Sprockets see pages 131÷132
Corner tracks see pages 280
Applications see page 20

MATERIALS			ITEM DESCRIPTION	PART NUMBER	WIDTH W		POLISHED HINGES	SIDEFLEXING RADIUS R		YIELD LOAD AVERAGE		WEIGHT	
Plate	Pin	Rubber			mm	inch		mm	inch	N	lbs	kg/m	lbs/ft
PRIMA P	HARDENED MARTENSITIC STAINLESS STEEL	NBR Hardness: 70 ShA	PHDG 9857M K 7 ½	PHDG9857MKL/000	190,5	7.50	YES	750	29,53	10500	2,360	4,97	3.34

Standard packaging: Rolls of 3,048 m (10 feet)

Copyright Regina Catene Calibrate s.p.a. - 2020, All rights reserved

REGINA CHAIN

PERFORMANCE IN MOTION

FliteTop®

Plastic Chains

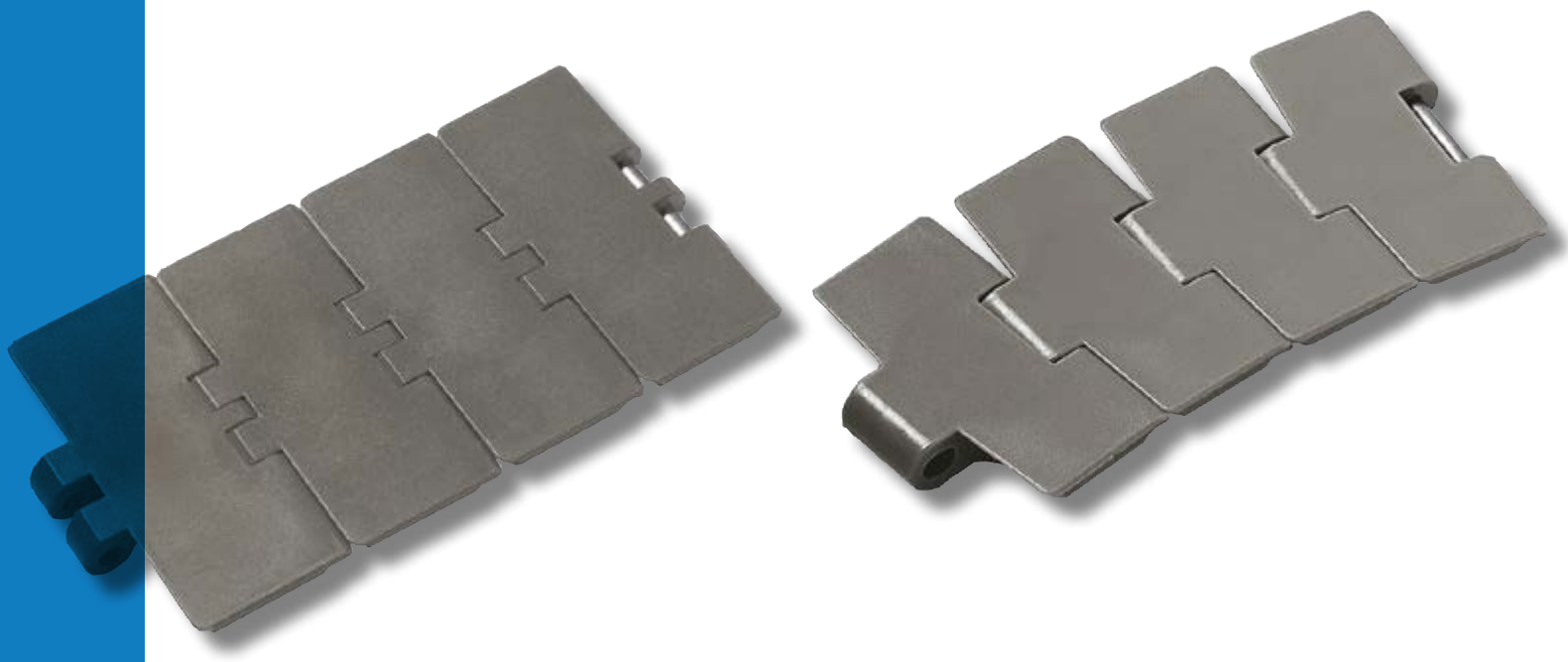

INDUSTRIES AND APPLICATIONS

PLASTIC CHAINS

Suitable for handling plastic and glass bottles, aluminum and steel cans. These products can be loose or packaged.

INDUSTRIES

Bottling and canning
Food filling
Container manufacturing
Pharmaceutical
Paper/cardboard
Glass manufacturing
Consumer goods

APPLICATIONS

Depallettizer
Pressureless Inliners and Combiners
Single lane and Mass conveyors
Accumulation tables
Infeed / outfeed packaging machines
Packaged product convey

FEATURES

- Highest standard of flatness thanks to the outperforming moulding process.
- Complete range of materials available, specifically defined for each type of application.
- DK2™ material available, developed with DuPont® with Kevlar® fiber inside.
  Lower Friction and maximum wear resistance are the superior properties of this material, allowing greater chain life, cost saving and environmental protection.
- e-F.A.S.T. material available, developed with DuPont®.
  Capable of exceeding such standards, thanks to its unique characteristic of delivering a much lower and constant coefficent of friction over time in dry or almost dry running conditions vs. other plastic chains.
- Equipped with austenitic stainless steel pins (except for the magnetic chain) to achieve the maximum corrosion resistance.

Copyright Regina Catene Calibrate s.p.a. - 2020, All rights reserved

SINGLE HINGE
PITCH 1 ½" (38,1 mm)
THICKNESS 4 mm (0.157")
HINGE 41,6 mm (1.638")

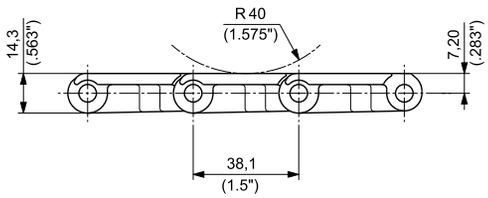

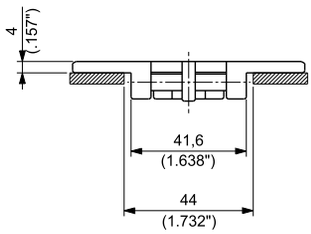

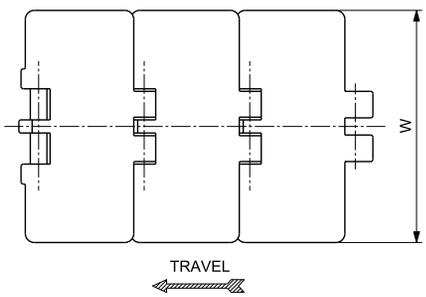

Materials see page 12
Sprockets see pages 140÷143
Applications see page 20

MATERIALS Plate	MATERIALS Pin	ITEM DESCRIPTION	PART NUMBER	WIDTH W mm	WIDTH W inch	PLATE THICKNESS mm	PLATE THICKNESS inch	WORKING LOAD (25°C/77°F) N	WORKING LOAD lbs	WEIGHT kg/m	WEIGHT lbs/ft
ULTRA PERFORMANCE HOMOPOLYMER DELRIN ® UP	AUSTENITIC STAINLESS STEEL	UP 820 K 3 ¼	UP820KD/000	82,6	3.25	4,0	0.16	1600	360	0,87	0.58
		UP 820 K 83,8	UP820KRA/000	83,8	3.30	4,0	0.16	1600	360	0,88	0.59
		UP 820 K 4	UP820KF/000	101,6	4.00	4,0	0.16	1600	360	0,95	0.64
		UP 820 K 4 ½	UP820KG/000	114,3	4.50	4,0	0.16	1600	360	1,03	0.69
		UP 820 K 6	UP820KH/000	152,4	6.00	4,0	0.16	1600	360	1,25	0.84
		UP 820 K 7 ½	UP820KL/000	190,5	7.50	4,0	0.16	1600	360	1,35	0.90
SPECIAL DELRIN ® REINFORCED WITH KEVLAR ® DKF2™	AUSTENITIC STAINLESS STEEL	D2K 820 K 3 ¼	D2K820KD/000	82,6	3.25	4,0	0.16	1600	360	0,85	0.57
		D2K 820 K 83,8	D2K820KRA/000	83,8	3.30	4,0	0.16	1600	360	0,86	0.58
		D2K 820 K 4 ½	D2K820KG/000	114,3	4.50	4,0	0.16	1600	360	1,00	0.67
		D2K 820 K 7 ½	D2K820KL/000	190,5	7.50	4,0	0.16	1600	360	1,36	0.90
NEW ECOLOGICAL FRICTION ABATING THERMOPLASTIC e-F.A.S.T.	AUSTENITIC STAINLESS STEEL	EF 820 K 3 ¼	EF820KD/000	82,6	3.25	4,0	0.16	1600	360	0,85	0.57
		EF 820 K 83,8	EF820KRA/000	83,8	3.30	4,0	0.16	1600	360	0,86	0.58
		EF 820 K 4 ½	EF820KG/000	114,3	4.50	4,0	0.16	1600	360	1,00	0.67
ABRASION RESISTANT POLYAMIDE[1] AR	AUSTENITIC STAINLESS STEEL	AR 820 K 3 ¼	AR820KD/000	82,6	3.25	4,0	0.16	1600	360	0,85	0.57
		AR 820 K 4 ½	AR820KG/000	114,3	4.50	4,0	0.16	1600	360	0,98	0.66

[1] ACTUAL WIDTH CAN BE UP TO 0,5% GREATER THAN NOMINAL WIDTH

Standard packaging: Rolls of 3,048 m (10 feet)

Copyright Regina Catene Calibrate s.p.a. - 2020, All rights reserved

REINFORCED SINGLE HINGE
REDUCED PLATE GAP
PITCH 1 ½" (38,1 mm)
THICKNESS 4 mm (0.157")
HINGE 42 mm (1.654")

DUPONT® KEVLAR® INSIDE

e-F.A.S.T. ECOLOGICAL FRICTION ABATING THERMO-PLASTIC

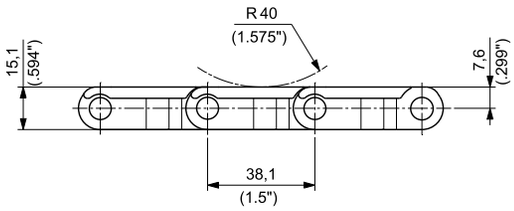

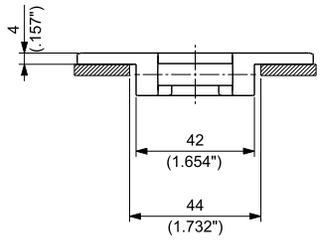

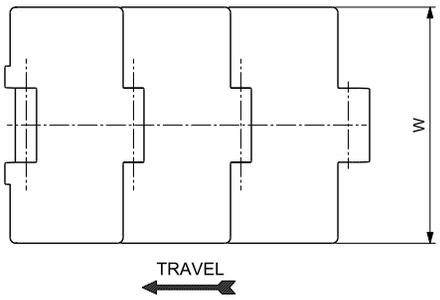

Materials see page 12
Sprockets see pages 146÷147
Applications see page 20

MATERIALS Plate	MATERIALS Pin	ITEM DESCRIPTION	PART NUMBER	WIDTH W mm	WIDTH W inch	PLATE THICKNESS mm	PLATE THICKNESS inch	WORKING LOAD (25°C/77°F) N	WORKING LOAD lbs	WEIGHT kg/m	WEIGHT lbs/ft
ULTRA PERFORMANCE HOMOPOLYMER DELRIN ® UP	STAINLESS STEEL	UP 828 K 3 ¼	UP828KD/000	82,6	3.25	4,0	0.16	2000	450	1,01	0.68
		UP 828 K 83,8	UP828KRA/000	83,8	3.30	4,0	0.16	2000	450	1,02	0.69
		UP 828 K 4 ½	UP828KG/000	114,3	4.50	4,0	0.16	2000	450	1,18	0.79
SPECIAL DELRIN ® REINFORCED WITH KEVLAR ® DKI2™	STAINLESS STEEL	D2K 828 K 3 ¼	D2K828KD/000	82,6	3.25	4,0	0.16	2000	450	1,01	0.68
		D2K 828 K 83,8	D2K828KRA/000	83,8	3.30	4,0	0.16	2000	450	1,02	0.69
		D2K 828 K 4 ½	D2K828KG/000	114,3	4.50	4,0	0.16	2000	450	1,18	0.79
NEW ECOLOGICAL FRICTION ABATING THERMOPLASTIC e-F.A.S.T.	STAINLESS STEEL	EF 828 K 3 ¼	EF828KD/000	82,6	3.25	4,0	0.16	2000	450	1,01	0.68
		EF 828 K 83,8	EF828KRA/000	83,8	3.30	4,0	0.16	2000	450	1,02	0.69
		EF 828 K 4 ½	EF828KG/000	114,3	4.50	4,0	0.16	2000	450	1,18	0.79
ABRASION RESISTANT POLYAMIDE AR	STAINLESS STEEL	AR 828 K 3 ¼	AR828KD/000	82,6	3.25	4,0	0.16	2000	450	0,98	0.66
		AR 828 K 4 ½	AR828KG/000	114,3	4.50	4,0	0.16	2000	450	1,12	0.75

Standard packaging: Rolls of 3,048 m (10 feet)

Copyright Regina Catene Calibrate s.p.a. - 2020, All rights reserved

SINGLE HINGE
REINFORCED TOP PLATE
PITCH 1 ½" (38,1 mm)
THICKNESS 4,8 mm (0.189")
HINGE 41,6 mm (1.638")

DUPONT® KEVLAR® INSIDE

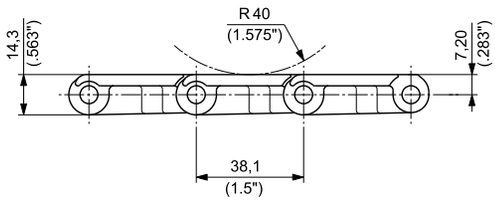

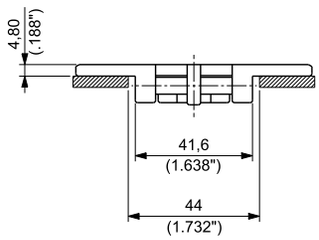

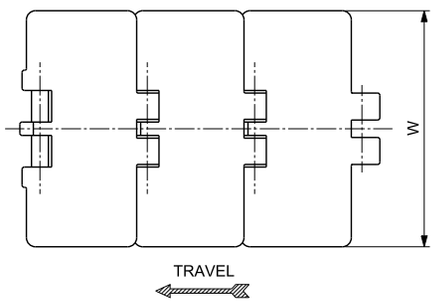

Materials see page 12
Sprockets see pages 140÷143
Applications see page 20

MATERIALS		ITEM DESCRIPTION	PART NUMBER	WIDTH W		PLATE THICKNESS		WORKING LOAD (25°C/77°F)		WEIGHT	
Plate	Pin			mm	inch	mm	inch	N	lbs	kg/m	lbs/ft
ULTRA PERFORMANCE HOMOPOLYMER DELRIN ® UP	AUSTENITIC STAINLESS STEEL	UP 831 K 3 ¼	UP831KD/000	82,6	3.25	4,8	0.19	1600	360	0,90	0.60
		UP 831 K 83,8	UP831KRA/000	83,8	3.30	4,8	0.19	1600	360	0,91	0.61
		UP 831 K 4 ½	UP831KG/000	114,3	4.50	4,8	0.19	1600	360	1,09	0.73
		UP 831 K 7 ½	UP831KL/000	190,5	7.50	4,8	0.19	1600	360	1,51	1.01
SPECIAL DELRIN ® REINFORCED WITH KEVLAR ® DK2™	AUSTENITIC STAINLESS STEEL	D2K 831 K 3 ¼	D2K831KD/000	82,6	3.25	4,8	0.19	1600	360	0,88	0.59
		D2K 831 K 83,8	D2K831KRA/000	83,8	3.30	4,8	0.19	1600	360	0,89	0.60
		D2K 831 K 4 ½	D2K831KG/000	114,3	4.50	4,8	0.19	1600	360	1,06	0.72
		D2K 831 K 7 ½	D2K831KL/000	190,5	7.50	4,8	0.19	1600	360	1,33	0.90

Standard packaging:
Rolls of 3,048 m (10 feet)

Copyright Regina Catene Calibrate s.p.a. - 2020, All rights reserved

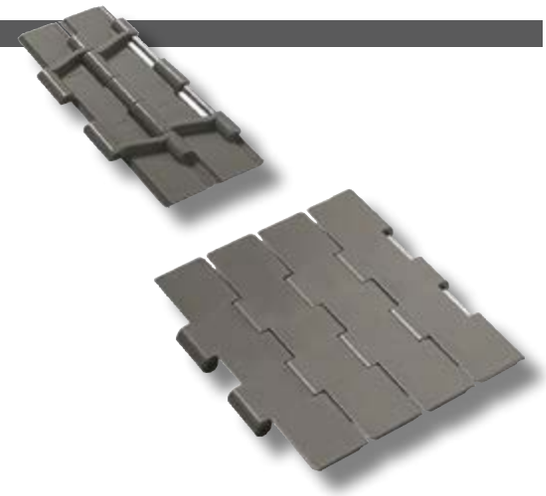

DOUBLE HINGE
REINFORCED TOP PLATE
PITCH 1 ½" (38,1 mm)
THICKNESS 4,8 mm (0.189")
HINGE 136,5 mm (5.374")

DUPONT® KEVLAR® INSIDE

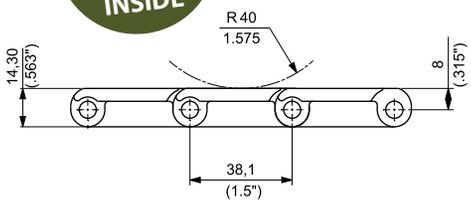

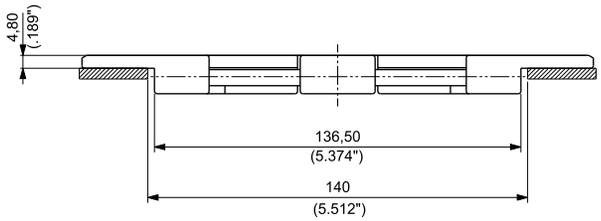

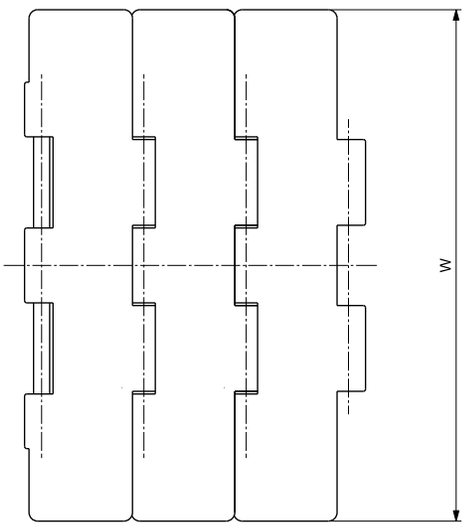

TRAVEL

Materials see page 12
Sprockets see pages 144÷145
Applications see page 20

MATERIALS Plate	MATERIALS Pin	ITEM DESCRIPTION	PART NUMBER	WIDTH W mm	WIDTH W inch	PLATE THICKNESS mm	PLATE THICKNESS inch	WORKING LOAD (25°C/77°F) N	WORKING LOAD (25°C/77°F) lbs	WEIGHT kg/m	WEIGHT lbs/ft
ULTRA PERFORMANCE HOMOPOLYMER DELRIN ® UP	AUSTENITIC STAINLESS STEEL	UP 821 K 7 ½	UP821KL/000	190,5	7.50	4,8	0.19	2750	618	2,48	1.67
		UP 821 K 10	UP821KM/000	254,0	10.00	4,8	0.19	2750	618	2,86	1.92
		UP 821 K 12	UP821KN/000	304,8	12.00	4,8	0.19	2750	618	3,16	2.12
SPECIAL DELRIN ® REINFORCED WITH KEVLAR ® DK2™	AUSTENITIC STAINLESS STEEL	D2K 821 K 7 ½	D2K821KL/000	190,5	7.50	4,8	0.19	2750	618	2,47	1.66

Standard packaging: Rolls of 3,048 m (10 feet)

Copyright Regina Catene Calibrate s.p.a. - 2020, All rights reserved

HEAVY DUTY SINGLE HINGE
REINFORCED TOP PLATE
PITCH 1 ½" (38,1 mm)
THICKNESS 4,8 mm (0.189")
HINGE 57 mm (2.244")

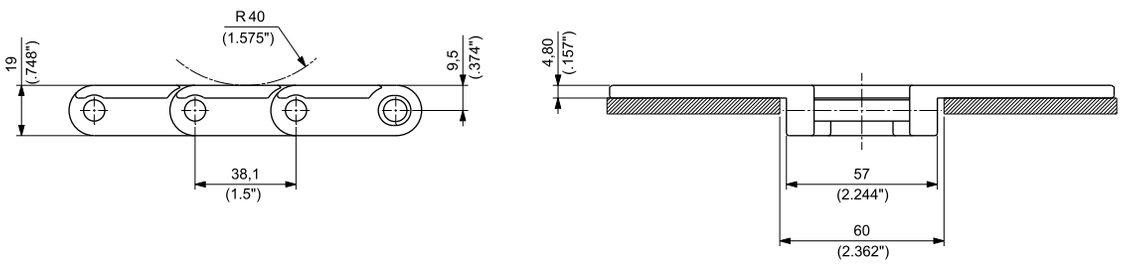

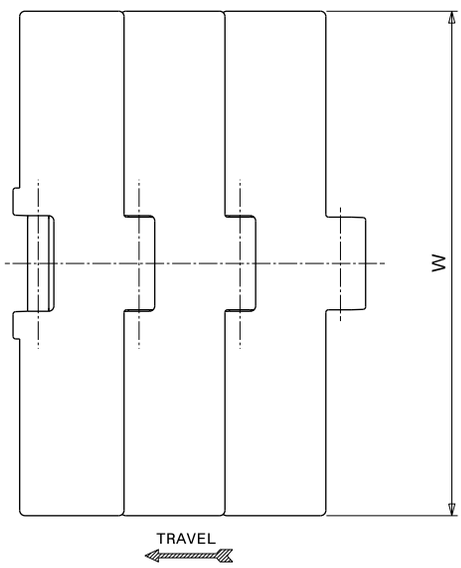

Materials see page 12
Sprockets see pages 149÷150
Applications see page 20

MATERIALS		ITEM DESCRIPTION	PART NUMBER	WIDTH W		PLATE THICKNESS		WORKING LOAD (25°C/77°F)		WEIGHT	
Plate	Pin			mm	inch	mm	inch	N	lbs	kg/m	lbs/ft
ULTRA PERFORMANCE HOMOPOLYMER DELRIN ® UP	AUSTENITIC STAINLESS STEEL	UP 8257 K 7 ½	UP8257KL/000	190,5	7.50	4,8	0.19	3910	879	2,35	1.58
		UP 8257 K 10	UP8257KM/000	254,0	10.00	4,8	0.19	3910	879	2,74	1.84
		UP 8257 K 12	UP8257KN/000	304,8	12.00	4,8	0.19	3910	879	3,06	2.06

Standard packaging:
Rolls of 3,048 m (10 feet)

Copyright Regina Catene Calibrate s.p.a. - 2020, All rights reserved

BEVEL
PITCH 1 ½" (38,1 mm)
THICKNESS 4 mm (0.157")
HINGE 43 mm (1.693")

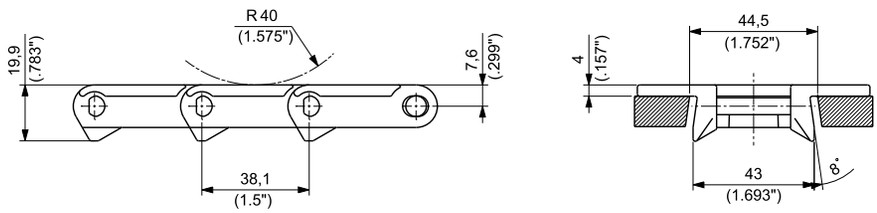

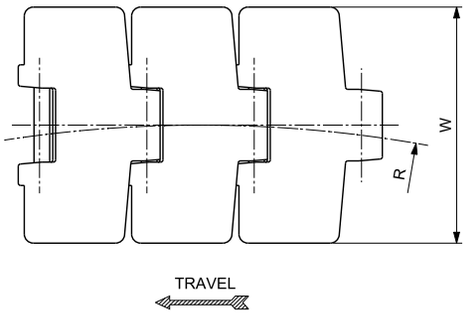

Materials see page 12
Sprockets see pages 146÷147
Corner tracks see page 320
Applications see page 20

MATERIALS Plate	MATERIALS Pin	ITEM DESCRIPTION	PART NUMBER	WIDTH W mm	WIDTH W inch	PLATE THICKNESS mm	PLATE THICKNESS inch	SIDEFLEXING RADIUS R mm	SIDEFLEXING RADIUS R inch	WORKING LOAD (25°C/77°F) N	WORKING LOAD (25°C/77°F) lbs	WEIGHT kg/m	WEIGHT lbs/ft
ULTRA PERFORMANCE HOMOPOLYMER DELRIN ® UP	AUSTENITIC STAINLESS STEEL	UP 880 K 3 ¼	UP880KD/000	82,6	3.25	4,0	0.16	457,2	18.00	2000	450	0,90	0.61
		UP 880 K 4 ½	UP880KG/000	114,3	4.50	4,0	0.16	500,0	19.69	2000	450	1.06	0.71
ABRASION RESISTANT POLYAMIDE[1] AR	AUSTENITIC STAINLESS STEEL	AR 880 K 3 ¼	AR880KD/000	82,6	3.25	4,0	0.16	457,2	18.00	2000	450	0,76	0.51
		AR 880 K 4 ½	AR880KG/000	114,3	4.50	4,0	0.16	500,0	19.69	2000	450	1,04	0.70

[1] ACTUAL WIDTH CAN BE UP TO 0,5% GREATER THAN NOMINAL WIDTH

Standard packaging: Rolls of 3,048 m (10 feet)

Copyright Regina Catene Calibrate s.p.a. - 2020, All rights reserved

TAB
PITCH 1 ½" (38,1 mm)
THICKNESS 4 mm (0.157")
HINGE 42,9 mm (1.689")

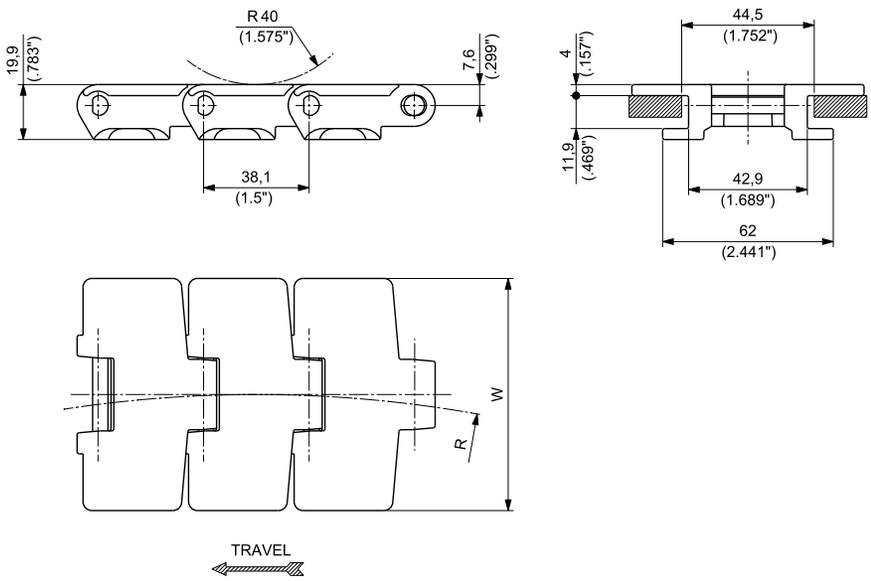

Materials see page 12 | Sprockets see pages 146÷148 | Corner tracks see page 320 | Applications see page 20

MATERIALS Plate	MATERIALS Pin	ITEM DESCRIPTION	PART NUMBER	WIDTH W mm	WIDTH W inch	PLATE THICKNESS mm	PLATE THICKNESS inch	SIDEFLEXING RADIUS R mm	SIDEFLEXING RADIUS R inch	WORKING LOAD (25°C/77°F) N	WORKING LOAD (25°C/77°F) lbs	WEIGHT kg/m	WEIGHT lbs/ft
ULTRA PERFORMANCE HOMOPOLYMER DELRIN ® UP	AUSTENITIC STAINLESS STEEL	UP 880T K 3 ¼	UP880TKD/000	82,6	3.25	4,0	0.16	457,2	18.00	2000	450	1,05	0.71
		UP 880T K 83,8	UP880TKRA/000	83,8	3.30	4,0	0.16	457,2	18.00	2000	450	1,06	0.71
		UP 880T K 4 ½	UP880TKG/000	114,3	4.50	4,0	0.16	500,0	19.69	2000	450	1,24	0.83
SPECIAL DELRIN ® REINFORCED WITH KEVLAR ® DK2™	AUSTENITIC STAINLESS STEEL	D2K 880T K 3 ¼	D2K880TKD/000	82,6	3.25	4,0	0.16	457,2	18.00	2000	450	1,03	0.69
		D2K 880T K 83,8	D2K880TKRA/000	83,8	3.30	4,0	0.16	457,2	18.00	2000	450	1,04	0.70
		D2K 880T K 4 ½	D2K880TKG/000	114,3	4.50	4,0	0.16	500,0	19.69	2000	450	1,22	0.82
NEW ECOLOGICAL FRICTION ABATING THERMOPLASTIC e-F.A.S.T.	AUSTENITIC STAINLESS STEEL	EF 880T K 3 ¼	EF880TKD/000	82,6	3.25	4,0	0.16	457,2	18.00	2000	450	1,03	0.69
		EF 880T K 83,8	EF880TKRA/000	83,8	3.30	4,0	0.16	457,2	18.00	2000	450	1,04	0.70
		EF 880T K 4 ½	EF880TKG/000	114,3	4.50	4,0	0.16	500,0	19.69	2000	450	1,22	0.82
ABRASION RESISTANT POLYAMIDE[1] AR	AUSTENITIC STAINLESS STEEL	AR 880T K 3 ¼	AR880TKD/000	82,6	3.25	4,0	0.16	457,2	18.00	2000	450	0,89	0.60
		AR 880T K 4 ½	AR880TKG/000	114,3	4.50	4,0	0.16	500,0	19.69	2000	450	1,02	0.69

[1] ACTUAL WIDTH CAN BE UP TO 0,5% GREATER THAN NOMINAL WIDTH

Standard packaging: Rolls of 3,048 m (10 feet)

Copyright Regina Catene Calibrate s.p.a. - 2020, All rights reserved

MAGNETIC
REDUCED PLATE GAP
PITCH 1 ½" (38,1 mm)
THICKNESS 4 mm (0.157")
HINGE 42 mm (1.654")

DUPONT® KEVLAR® INSIDE

e-F.A.S.T. ECOLOGICAL FRICTION ABATING THERMO-PLASTIC

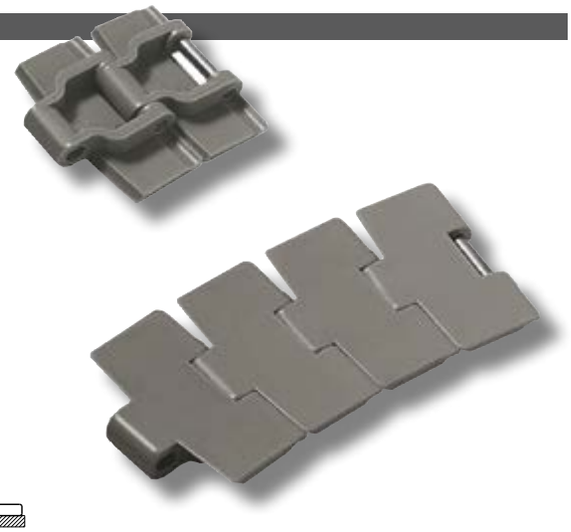

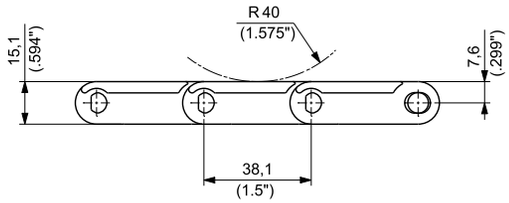

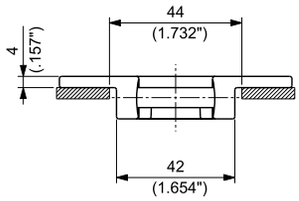

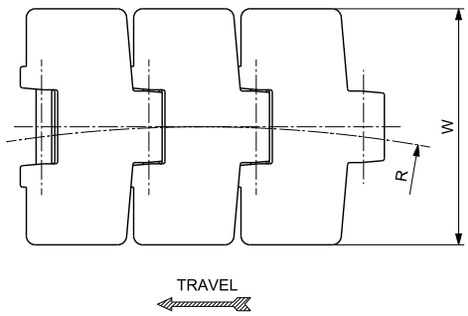

Materials see page 12
Sprockets see pages 146÷147
Corner tracks see pages 280
Applications see page 20

MATERIALS Plate	MATERIALS Pin	ITEM DESCRIPTION	PART NUMBER	WIDTH W mm	WIDTH W inch	PLATE THICKNESS mm	PLATE THICKNESS inch	SIDEFLEXING RADIUS R mm	SIDEFLEXING RADIUS R inch	WORKING LOAD (25°C/77°F) N	WORKING LOAD (25°C/77°F) lbs	WEIGHT kg/m	WEIGHT lbs/ft
ULTRA PERFORMANCE HOMOPOLYMER DELRIN ® UP	MAGNETIC STAINLESS STEEL	UP 880M RG K 3 ¼	UP880MRGKD/000	82,6	3.25	4,0	0.16	500,0	19.69	2000	450	0,98	0.66
		UP 880M RG K 83,8	UP880MRGKRA/000	83,8	3.30	4,0	0.16	500,0	19.69	2000	450	0,99	0.67
		UP 880M RG K 4 ½	UP880MRGKG/000	114,3	4.50	4,0	0.16	500,0	19.69	2000	450	1,12	0.75
SPECIAL DELRIN ® REINFORCED WITH KEVLAR ® DK2™	MAGNETIC STAINLESS STEEL	D2K 880M RG K 3 ¼	D2K880MRGKD/000	82,6	3.25	4,0	0.16	500,0	19.69	2000	450	0,97	0.65
		D2K 880M RG K 83,8	D2K880MRGKRA/000	83,8	3.30	4,0	0.16	500,0	19.69	2000	450	0,98	0.66
		D2K 880M RG K 4 ½	D2K880MRGKG/000	114,3	4.50	4,0	0.16	500,0	19.69	2000	450	1,12	0.75
NEW ECOLOGICAL FRICTION ABATING THERMOPLASTIC e-F.A.S.T.	MAGNETIC STAINLESS STEEL	EF 880M RG K 3 ¼	EF880MRGKD/000	82,6	3.25	4,0	0.16	500,0	19.69	2000	450	0,97	0.65
		EF 880M RG K 83,8	EF880MRGKRA/000	83,8	3.30	4,0	0.16	500,0	19.69	2000	450	0,98	0.66
		EF 880M RG K 4 ½	EF880MRGKG/000	114,3	4.50	4,0	0.16	500,0	19.69	2000	450	1,12	0.75
ABRASION RESISTANT POLYAMIDE[1] AR	MAGNETIC STAINLESS STEEL	AR 880M RG K 4 ½	AR880MRGKG/000	114,3	4.50	4,0	0.16	500,0	19.69	2000	450	1,08	0.73

[1] ACTUAL WIDTH CAN BE UP TO 0,5% GREATER THAN NOMINAL WIDTH

Standard packaging: Rolls of 3,048 m (10 feet)

Copyright Regina Catene Calibrate s.p.a. - 2020, All rights reserved

BEVEL
REINFORCED TOP PLATE
PITCH 1 ½" (38,1 mm)
THICKNESS 4,8 mm (0.188")
HINGE 43 mm (1.693")

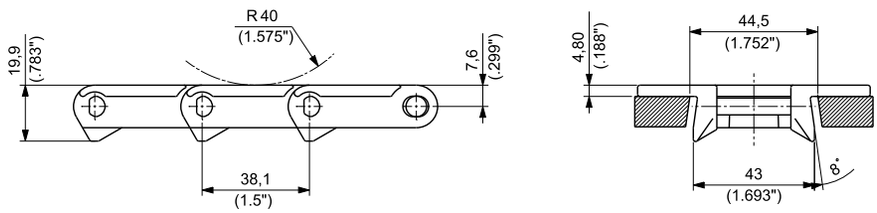

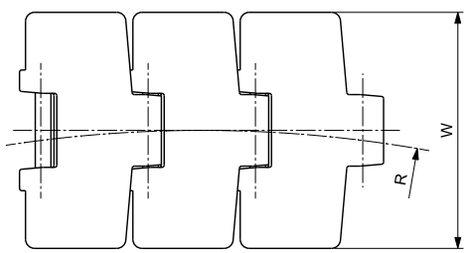

TRAVEL

Materials see page 12
Sprockets see pages 146÷148
Corner tracks see page 325
Applications see page 20

MATERIALS		ITEM DESCRIPTION	PART NUMBER	WIDTH W		PLATE THICKNESS		SIDEFLEXING RADIUS R		WORKING LOAD (25°C/77°F)		WEIGHT	
Plate	Pin			mm	inch	mm	inch	mm	inch	N	lbs	kg/m	lbs/ft
ULTRA PERFORMANCE HOMOPOLYMER DELRIN ® UP	AUSTENITIC STAINLESS STEEL	UP 879 K 3 ¼	UP879KD/000	82,6	3.25	4,8	0.19	457,2	18.00	2000	450	0,96	0.65
		UP 879 K 4 ½	UP879KG/000	114,3	4.50	4,8	0.19	500,0	19.69	2000	450	1,11	0.75

Standard packaging:
Rolls of 3,048 m (10 feet)

Copyright Regina Catene Calibrate s.p.a. - 2020, All rights reserved

TAB
REINFORCED TOP PLATE
PITCH 1 ½" (38,1 mm)
THICKNESS 4,8 mm (0.188")
HINGE 42,9 mm (1.689")

DUPONT® KEVLAR® INSIDE

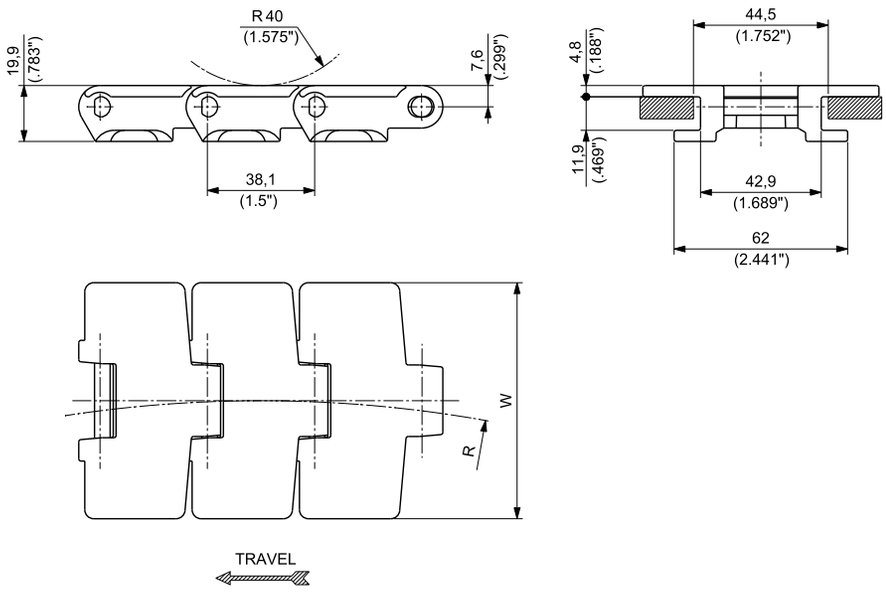

Materials see page 12
Sprockets see pages 146÷148
Corner tracks see page 320
Applications see page 20

MATERIALS Plate	MATERIALS Pin	ITEM DESCRIPTION	PART NUMBER	WIDTH W mm	WIDTH W inch	PLATE THICKNESS mm	PLATE THICKNESS inch	SIDEFLEXING RADIUS R mm	SIDEFLEXING RADIUS R inch	WORKING LOAD (25°C/77°F) N	WORKING LOAD (25°C/77°F) lbs	WEIGHT kg/m	WEIGHT lbs/ft
ULTRA PERFORMANCE HOMOPOLYMER DELRIN ® UP	AUSTENITIC STAINLESS STEEL	UP 879T K 3 ¼	UP879TKD/000	82,6	3.25	4,8	0.19	457,2	18.00	2000	450	1,07	0.72
		UP 879T K 83,8	UP879TKRA/000	83,8	3.30	4,8	0.19	457,2	18.00	2000	450	1,08	0.73
		UP 879T K 4 ½	UP879TKG/000	114,3	4.50	4,8	0.19	500,0	19.69	2000	450	1,28	0.86
SPECIAL DELRIN ® REINFORCED WITH KEVLAR ® DK2™	AUSTENITIC STAINLESS STEEL	D2K 879T K 3 ¼	D2K879TKD/000	82,6	3.25	4,8	0.19	457,2	18.00	2000	450	1,04	0.70
		D2K 879T K 83,8	D2K879TKRA/000	83,8	3.30	4,8	0.19	457,2	18.00	2000	450	1,05	0.71
		D2K 879T K 4 ½	D2K879TKG/000	114,3	3.30	4,8	0.19	500,0	19.69	2000	450	1,24	0.83

Standard packaging: Rolls of 3,048 m (10 feet)

Copyright Regina Catene Calibrate s.p.a. - 2020, All rights reserved

BEVEL
HEAVY DUTY SINGLE HINGE
REINFORCED TOP PLATE
PITCH 1 ½" (38,1 mm)
THICKNESS 4,8 mm (0.189")
HINGE 61 mm (2.402")

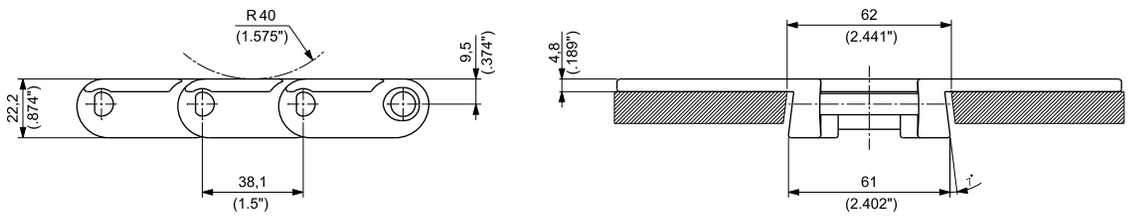

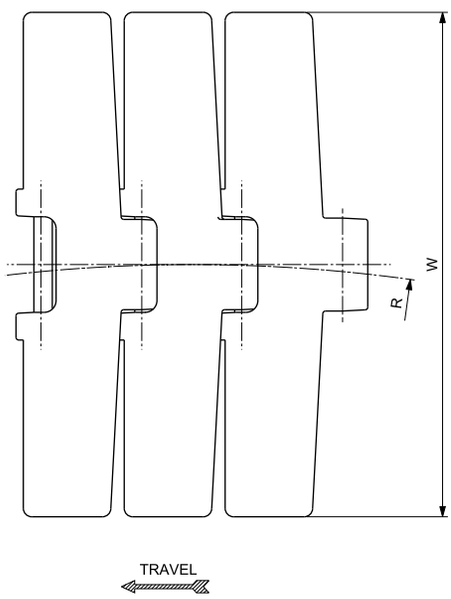

Materials see page 12
Sprockets see pages 149÷150
Corner tracks see page 326
Applications see page 20

MATERIALS		ITEM DESCRIPTION	PART NUMBER	WIDTH W		PLATE THICKNESS		SIDEFLEXING RADIUS R		WORKING LOAD (25°C/77°F)		WEIGHT	
Plate	Pin			mm	inch	mm	inch	mm	inch	N	lbs	kg/m	lbs/ft
ULTRA PERFORMANCE HOMOPOLYMER DELRIN ® UP	AUSTENITIC STAINLESS STEEL	UP 882 K 4 ½	UP882KG/000	114,3	4.50	4,8	0.19	609,6	24	3910	879	1,92	1.29
		UP 882 K 7 ½	UP882KL/000	190,5	7.50	4,8	0.19	609,6	24	3910	879	2,31	1.55
		UP 882 K 10	UP882KM/000	254,0	10.00	4,8	0.19	609,6	24	3910	879	2,62	1.76
		UP 882 K 12	UP882KN/000	304,8	12.00	4,8	0.19	609,6	24	3910	879	2,85	1.91

Standard packaging:
Rolls of 3,048 m (10 feet)

Copyright Regina Catene Calibrate s.p.a. - 2020, All rights reserved

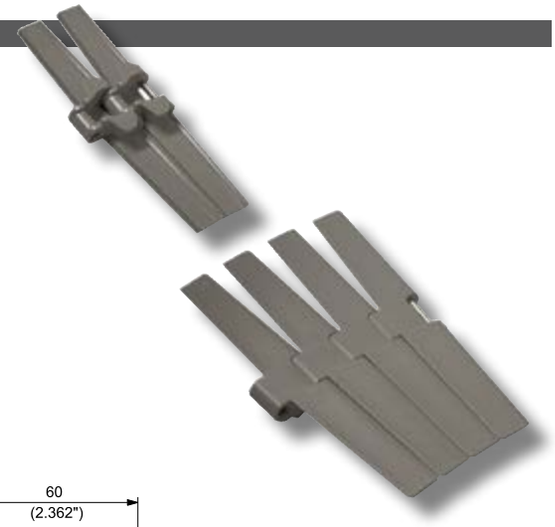

TAB
HEAVY DUTY SINGLE HINGE
REINFORCED TOP PLATE
PITCH 1 ½" (38,1 mm)
THICKNESS 4,8 mm (0.189")
HINGE 57 mm (2.244")

DUPONT® KEVLAR® INSIDE

e-F.A.S.T. ECOLOGICAL FRICTION ABATING THERMO-PLASTIC

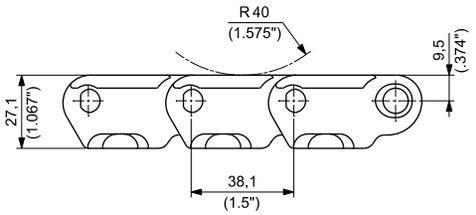

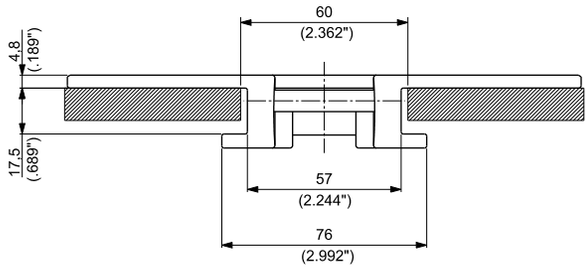

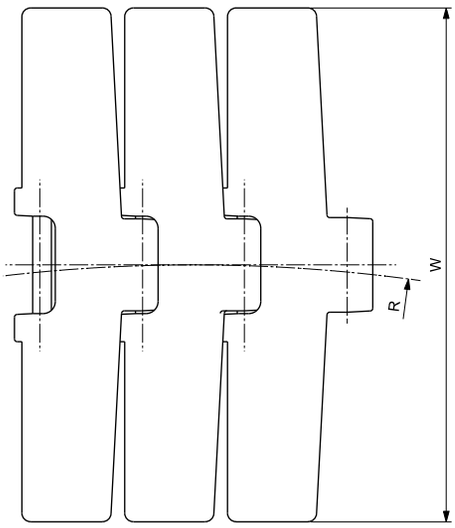

TRAVEL

Materials see page 12

Sprockets see pages 149÷151

Corner tracks see page 321

Applications see page 20

MATERIALS Plate	MATERIALS Pin	ITEM DESCRIPTION	PART NUMBER	WIDTH W mm	WIDTH W inch	PLATE THICKNESS mm	PLATE THICKNESS inch	SIDEFLEXING RADIUS R mm	SIDEFLEXING RADIUS R inch	WORKING LOAD (25°C/77°F) N	WORKING LOAD (25°C/77°F) lbs	WEIGHT kg/m	WEIGHT lbs/ft
ULTRA PERFORMANCE HOMOPOLYMER DELRIN ® UP	AUSTENITIC STAINLESS STEEL	UP 882T K 4 ½	UP882TKG/000	114,3	4.50	4,8	0.19	609,6	24	3910	879	2,05	1.38
		NEW UP 882T K 6	UP882TKH/000	152,4	6.00	4,8	0.19	609,6	24	3910	879	2,25	1.51
		UP 882T K 7 ½	UP882TKL/000	190,5	7.50	4,8	0.19	609,6	24	3910	879	2,45	1.64
		UP 882T K 10	UP882TKM/000	254,0	10.00	4,8	0.19	609,6	24	3910	879	2,75	1.85
		UP 882T K 12	UP882TKN/000	304,8	12.00	4,8	0.19	609,6	24	3910	879	2,99	2.01
SPECIAL DELRIN ® REINFORCED WITH KEVLAR ® DK2™	AUSTENITIC STAINLESS STEEL	D2K 882T K 4 ½	D2K882TKG/000	114,3	4.50	4,8	0.19	609,6	24	3910	879	2,05	1.38
		NEW D2K 882T K 6	D2K882TKH/000	152,4	6.00	4,8	0.19	609,6	24	3910	879	2,25	1.51
		D2K 882T K 7 ½	D2K882TKL/000	190,5	7.50	4,8	0.19	609,6	24	3910	879	2,45	1.64
NEW ECOLOGICAL FRICTION ABATING THERMOPLASTIC e-F.A.S.T.	AUSTENITIC STAINLESS STEEL	EF 882T K 4 ½	EF882TKG/000	114,3	4.50	4,8	0.19	609,6	24	3910	879	2,05	1.38

Standard packaging: Rolls of 3,048 m (10 feet)

Copyright Regina Catene Calibrate s.p.a. - 2020, All rights reserved

MAGNETIC
HEAVY DUTY SINGLE HINGE
REINFORCED TOP PLATE
PITCH 1 ½" (38,1 mm)
THICKNESS 4,8 mm (0.189")
HINGE 57 mm (2.244")

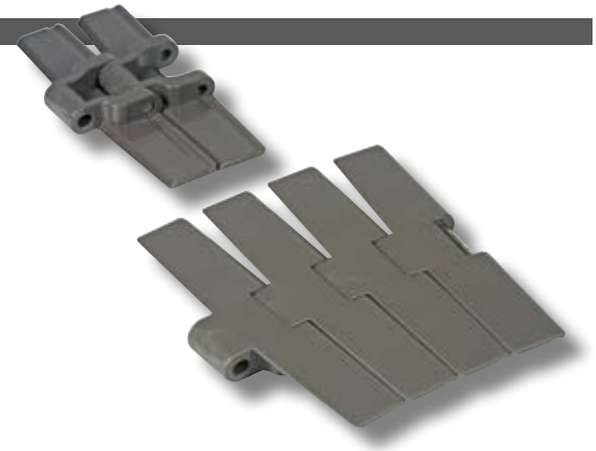

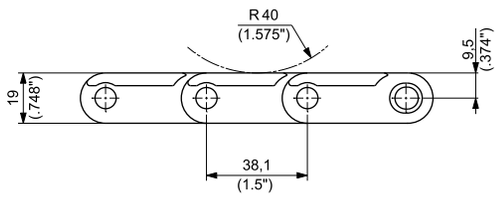

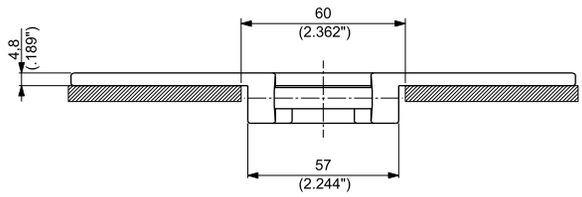

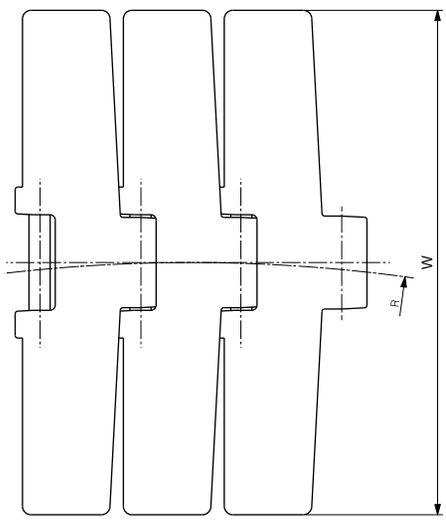

Materials see page 12
Sprockets see pages 149÷150
Corner tracks see pages 280
Applications see page 20

MATERIALS		ITEM DESCRIPTION	PART NUMBER	WIDTH W		PLATE THICKNESS		SIDEFLEXING RADIUS R		WORKING LOAD (25°C/77°F)		WEIGHT	
Plate	Pin			mm	inch	mm	inch	mm	inch	N	lbs	kg/m	lbs/ft
ULTRA PERFORMANCE HOMOPOLYMER DELRIN® UP	MAGNETIC STAINLESS STEEL	UP 882M K 7 ½	UP882MKL/000	190,5	7.50	4,8	0.19	609,6	24	3910	879	2,21	1.48
		UP 882M K 10	UP882MKM/000	254,0	10.00	4,8	0.19	609,6	24	3910	879	2,52	1.69
		UP 882M K 12	UP882MKN/000	304,8	12.00	4,8	0.19	609,6	24	3910	879	2,76	1.85

Standard packaging:
Rolls of 3,048 m (10 feet)

Copyright Regina Catene Calibrate s.p.a. - 2020, All rights reserved

TAB
REDUCED SIDEFLEXING RADIUS
REINFORCED TOP PLATE
PITCH 1 ½" (38,1 mm)
THICKNESS 4,8 mm (0.189")
HINGE 42,9 mm (1.689")

DUPONT® KEVLAR® INSIDE

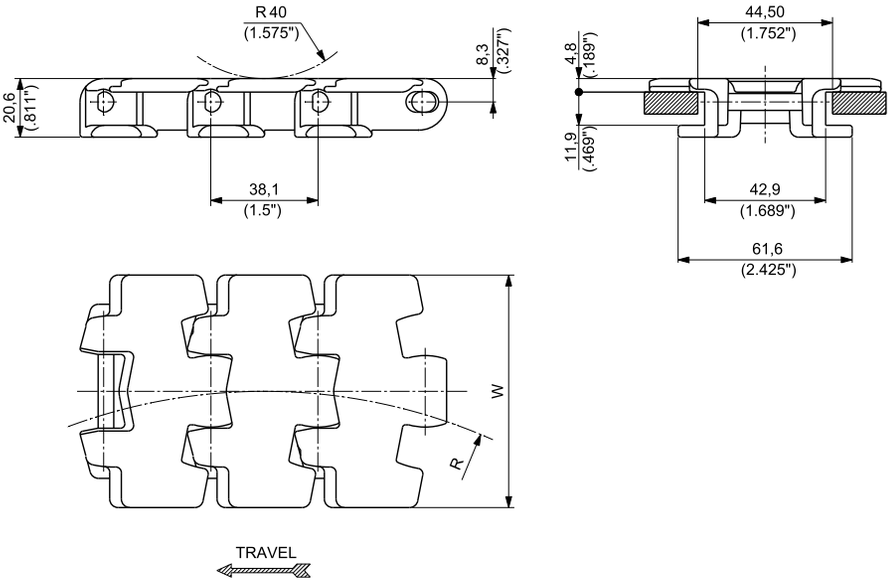

Materials see page 12
Sprockets see pages 146÷148
Corner tracks see page 320
Applications see page 20

MATERIALS Plate	MATERIALS Pin	ITEM DESCRIPTION	PART NUMBER	WIDTH W mm	WIDTH W inch	PLATE THICKNESS mm	PLATE THICKNESS inch	SIDEFLEXING RADIUS R mm	SIDEFLEXING RADIUS R inch	WORKING LOAD (25°C/77°F) N	WORKING LOAD (25°C/77°F) lbs	WEIGHT kg/m	WEIGHT lbs/ft
ULTRA PERFORMANCE HOMOPOLYMER DELRIN ® UP	AUSTENITIC STAINLESS STEEL	UP 878T K 3 ¼	UP878TKD/000	82,6	3.25	4,8	0.19	200	7.87	2000	450	1,08	0.73
SPECIAL DELRIN ® REINFORCED WITH KEVLAR ® DK2™	AUSTENITIC STAINLESS STEEL	D2K 878T K 3 ¼	D2K878TKD/000	82,6	3.25	4,8	0.19	200	7.87	2000	450	1,06	0.71
ABRASION RESISTANT POLYAMIDE AR	AUSTENITIC STAINLESS STEEL	AR 878T K 3 ¼	AR878TKD/000	82,6	3.25	4,8	0.19	200	7.87	2000	450	0,89	0.60

Standard packaging: Rolls of 3,048 m (10 feet)

Copyright Regina Catene Calibrate s.p.a. - 2020, All rights reserved

TAB
VACUUM SERIES
PITCH 1 ½" (38,1 mm)
THICKNESS 4 mm (0.157")
HINGE 42,9 mm (1.689")

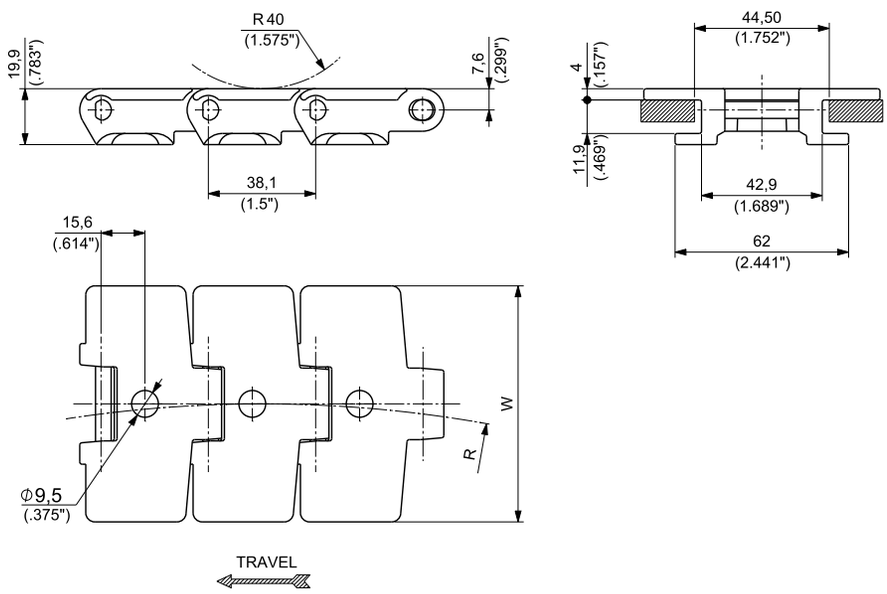

Materials see page 12
Sprockets see pages 146÷148
Corner tracks see page 320
Applications see page 20

MATERIALS Plate	MATERIALS Pin	ITEM DESCRIPTION	PART NUMBER	WIDTH W mm	WIDTH W inch	PLATE THICKNESS mm	PLATE THICKNESS inch	SIDEFLEXING RADIUS R mm	SIDEFLEXING RADIUS R inch	WORKING LOAD (25°C/77°F) N	WORKING LOAD (25°C/77°F) lbs	WEIGHT kg/m	WEIGHT lbs/ft
ULTRA PERFORMANCE HOMOPOLYMER DELRIN® UP	AUSTENITIC STAINLESS STEEL	UP 880TA K 3 ¼	UP880TAKD/000	82,6	3.25	4,0	0.16	457,2	18	2000	450	0,51	0.34

Standard packaging: Rolls of 3,048 m (10 feet)

Copyright Regina Catene Calibrate s.p.a. - 2020, All rights reserved

REGINA CHAIN

PERFORMANCE IN MOTION

FliteTop®

Rubberized Surface Plastic Chains

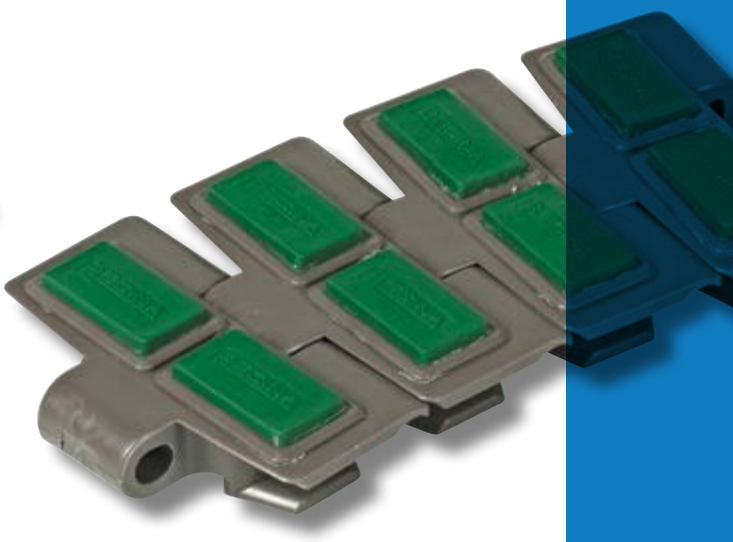

SINGLE HINGE
PITCH 1 ½" (38,1 mm)
THICKNESS 4 mm (0.157")
HINGE 41,6 mm (1.638")

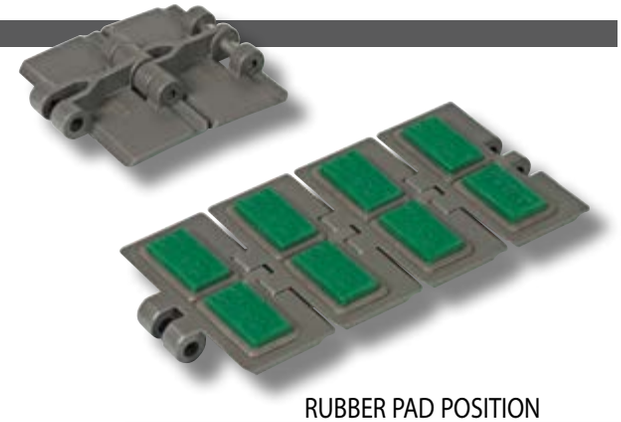

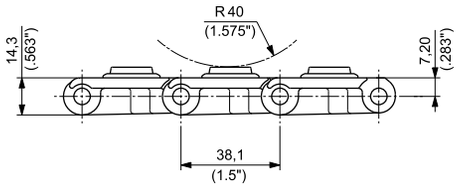

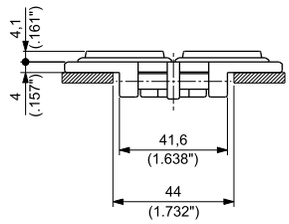

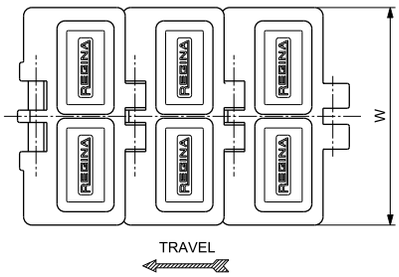

RUBBER PAD POSITION

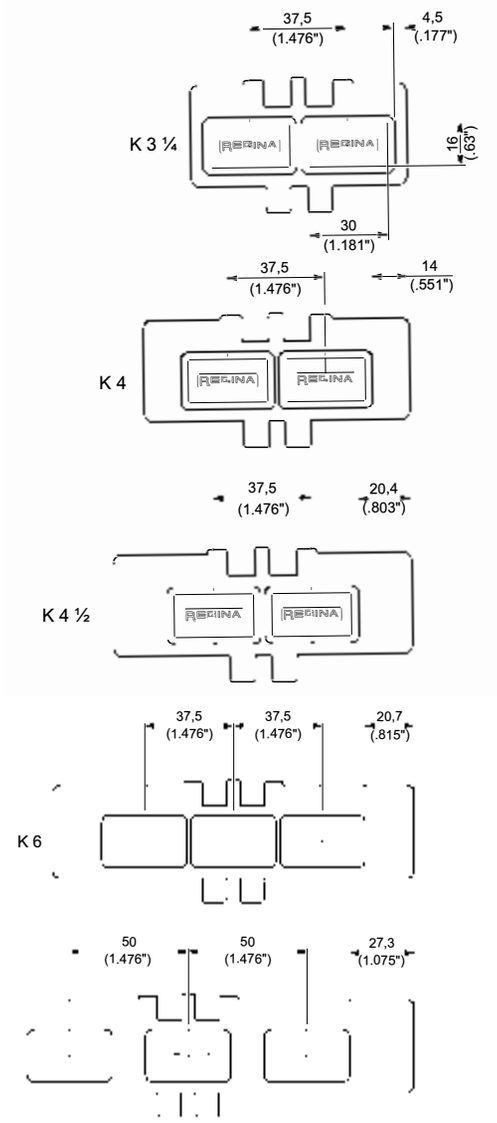

Materials see page 12
Sprockets see pages 140÷143
Applications see page 20

MATERIALS			ITEM DESCRIPTION	PART NUMBER	WIDTH W		PLATE THICKNESS		WORKING LOAD (25°C/77°F)		WEIGHT	
Plate	Pin	Rubber			mm	inch	mm	inch	N	lbs	kg/m	lbs/ft
ULTRA PERFORMANCE HOMOPOLYMER DELRIN ® UP	AUSTENITIC STAINLESS STEEL	THERMOPLASTIC TPE Hardness: 70 ShA	HFX 820 UP K 3 ¼	HFX820KD/000	82,6	3.25	4,0	0.16	1600	360	1,00	0.67
			HFX 820 UP K 4	HFX820KF/000	101,6	4.00	4,0	0.16	1600	360	1,09	0.73
			HFX 820 UP K 4 ½	HFX820KG/000	114,3	4.50	4,0	0.16	1600	360	1,17	0.79
			HFX 820 UP K 6	HFX820KH/000	152,4	6.00	4,0	0.16	1600	360	1,45	0.97
			HFX 820 UP K 7 ½	HFX820KL/000	190,5	7.50	4,0	0.16	1600	360	1,60	1.07

Standard packaging: Rolls of 3,048 m (10 feet)

Copyright Regina Catene Calibrate s.p.a. - 2020, All rights reserved

DOUBLE HINGE
REINFORCED TOP PLATE
PITCH 1 ½" (38,1 mm)
THICKNESS 4,8 mm (0.189")
HINGE 136,5 mm (5.374")

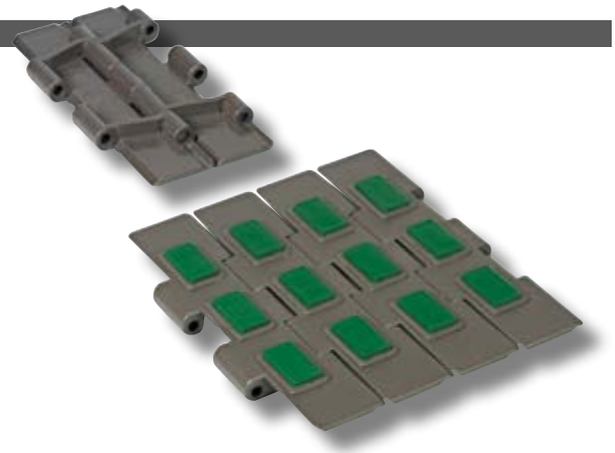

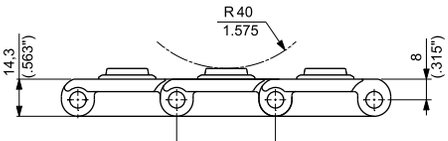

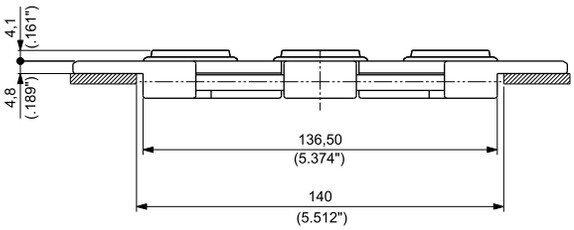

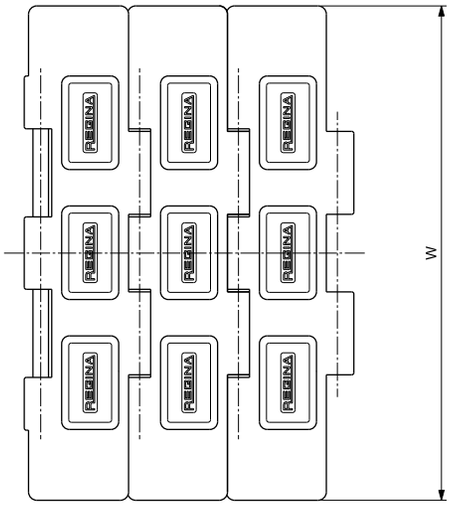

TRAVEL

RUBBER PAD POSITION

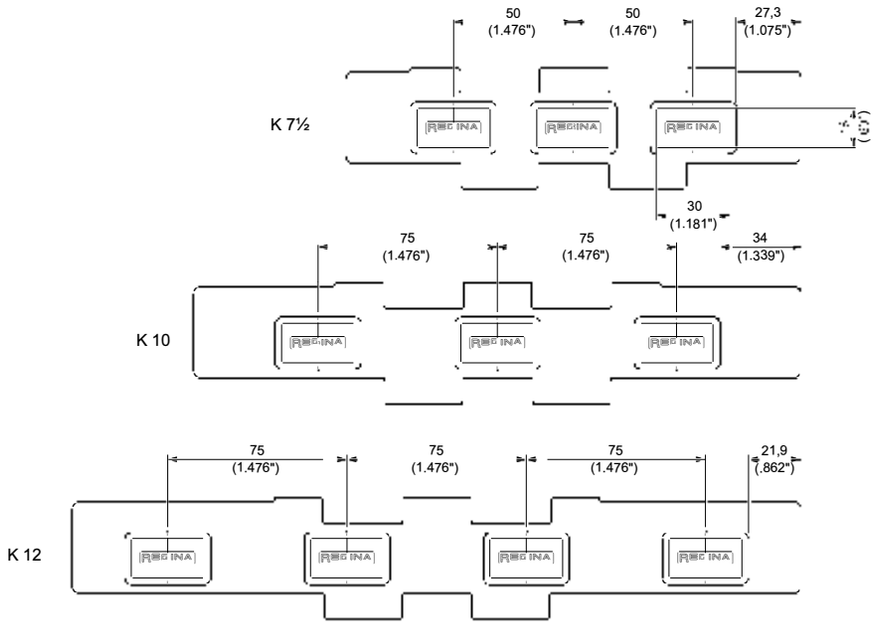

Materials see page 12
Sprockets see pages 144÷145
Applications see page 20

MATERIALS			ITEM DESCRIPTION	PART NUMBER	WIDTH W		PLATE THICKNESS		WORKING LOAD (25°C/77°F)		WEIGHT	
Plate	Pin	Rubber			mm	inch	mm	inch	N	lbs	kg/m	lbs/ft
ULTRA PERFORMANCE HOMOPOLYMER DELRIN ® UP	AUSTENITIC STAINLESS STEEL	THERMOPLASTIC TPE Hardness: 70 ShA	HFX 821 UP K 7 ½	HFX821KL/000	190,5	7.50	4,8	0.19	2750	618	2,68	1.80
			HFX 821 UP K 10	HFX821KM/000	254,0	10.00	4,8	0.19	2750	618	3,06	2.06
			HFX 821 UP K 12	HFX821KN/000	304,8	12.00	4,8	0.19	2750	618	3,43	2.30

Standard packaging: Rolls of 3,048 m (10 feet)

Copyright Regina Catene Calibrate s.p.a. - 2020, All rights reserved

HEAVY DUTY SINGLE HINGE
REINFORCED TOP PLATE
PITCH 1 ½" (38,1 mm)
THICKNESS 4,8 mm (0.189")
HINGE 57 mm (2.244")

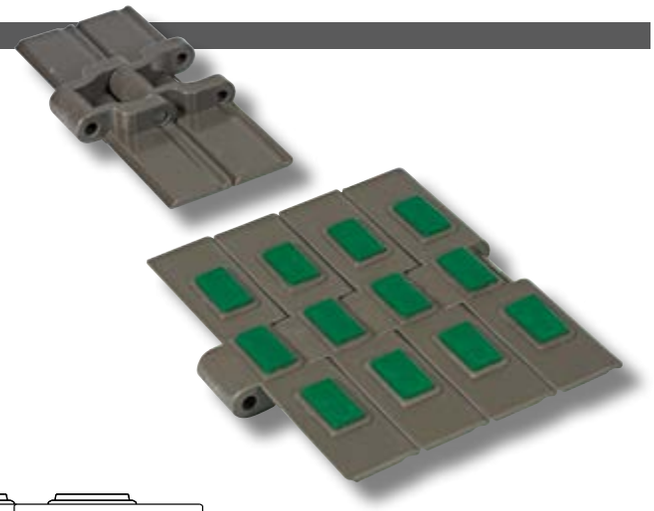

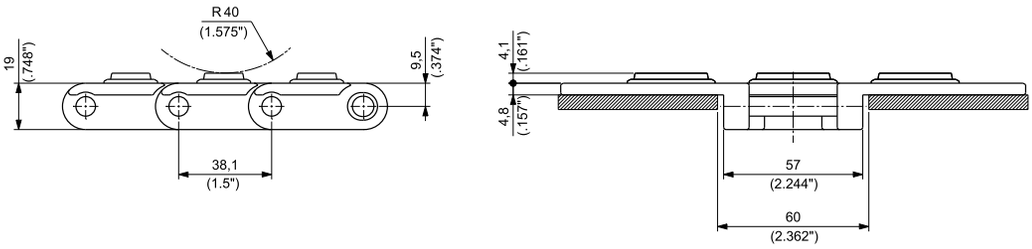

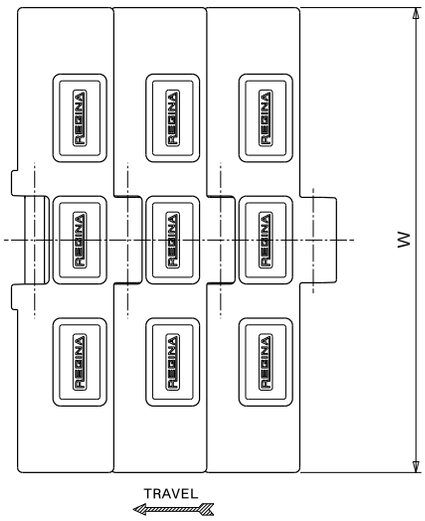

RUBBER PAD POSITION

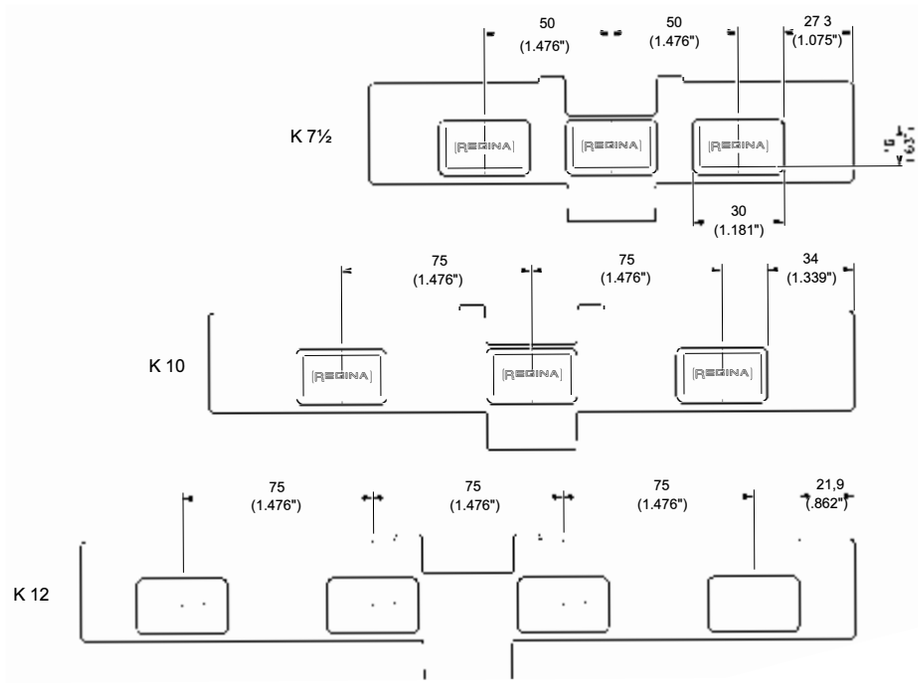

Materials see page 12
Sprockets see pages 149÷150
Applications see page 20

MATERIALS			ITEM DESCRIPTION	PART NUMBER	WIDTH W		PLATE THICKNESS		WORKING LOAD (25°C/77°F)		WEIGHT	
Plate	Pin	Rubber			mm	inch	mm	inch	N	lbs	kg/m	lbs/ft
ULTRA PERFORMANCE HOMOPOLYMER DELRIN ® UP	AUSTENITIC STAINLESS STEEL	THERMOPLASTIC TPE Hardness: 70 ShA	HFX 8257 UP K 7 ½	HFX8257UPKL/000	190,5	7.50	4,8	0.19	3910	154	2,68	1.80
			HFX 8257 UP K 10	HFX8257UPKM/000	254,0	10.00	4,8	0.19	3910	154	3,06	2.06
			HFX 8257 UP K 12	HFX8257UPKN/000	304,8	12.00	4,8	0.19	3910	154	3,43	2.30

Standard packaging: Rolls of 3,048 m (10 feet)

Copyright Regina Catene Calibrate s.p.a. - 2020, All rights reserved

TAB
PITCH 1 ½" (38,1 mm)
THICKNESS 4 mm (0.157")
HINGE 42,9 mm (1.689")

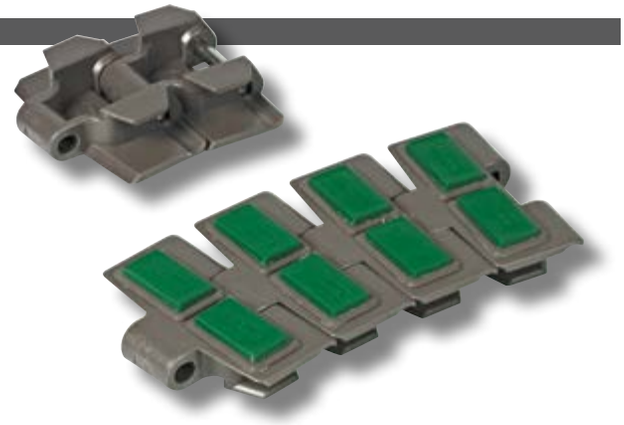

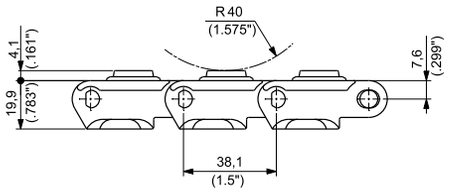

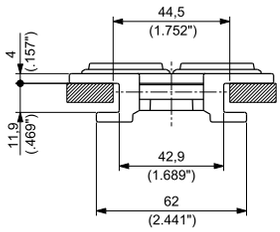

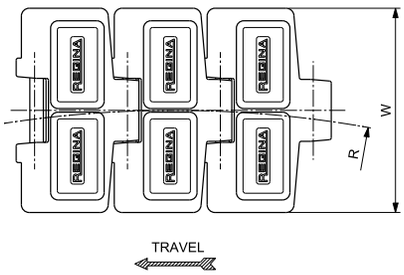

RUBBER PAD POSITION

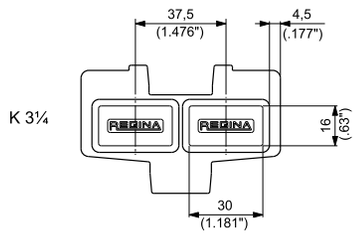

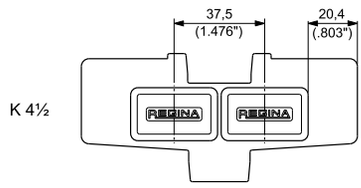

Materials see page 12
Sprockets see pages 146÷148
Corner tracks see page 320
Applications see page 20

MATERIALS			ITEM DESCRIPTION	PART NUMBER	WIDTH W		PLATE THICKNESS		SIDEFLEXING RADIUS R		WORKING LOAD (25°C/77°F)		WEIGHT	
Plate	Pin	Rubber			mm	inch	mm	inch	mm	Inch	N	lbs	kg/m	lbs/ft
ULTRA PERFORMANCE HOMOPOLYMER DELRIN ® UP	AUSTENITIC STAINLESS STEEL	THERMOPLASTIC TPE Hardness: 70 ShA	HFX 880T UP K 3 ¼	HFX880TKD/000	82,6	3.25	4,0	0.16	500,0	19.69	2750	618	2,68	1.80
			HFX 880T UP K 4 ½	HFX880TKG/000	114,3	4.50	4,0	0.16	500,0	19.69	2750	618	3,06	2.06

Standard packaging: Rolls of 3,048 m (10 feet)

Copyright Regina Catene Calibrate s.p.a. - 2020, All rights reserved

TAB
HEAVY DUTY SINGLE HINGE
REINFORCED TOP PLATE
PITCH 1 ½" (38,1 mm)
THICKNESS 4,8 mm (0.189")
HINGE 57 mm (2.244")

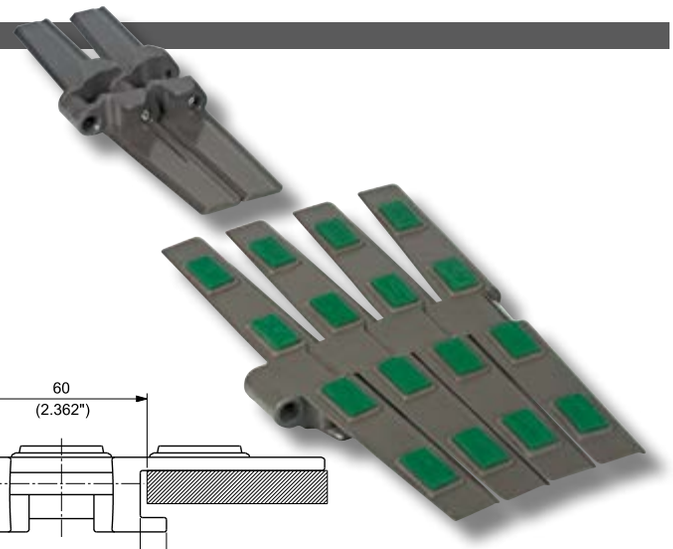

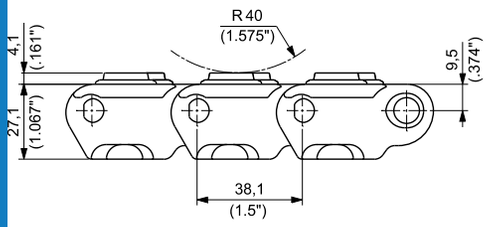

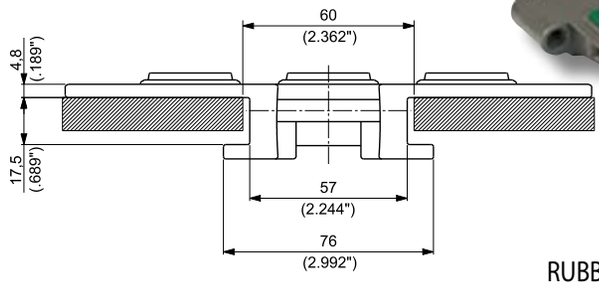

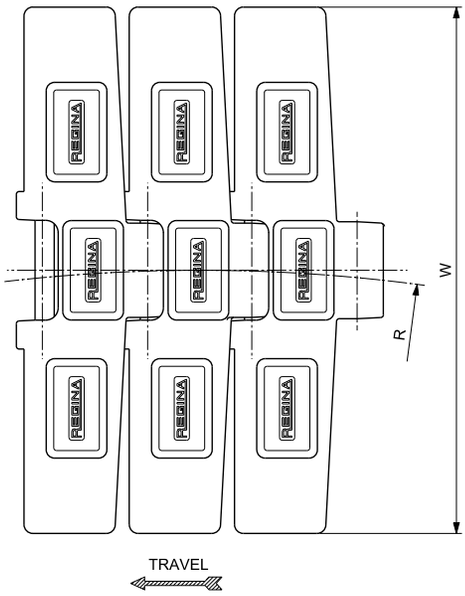

RUBBER PAD POSITION

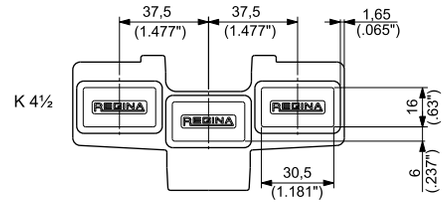

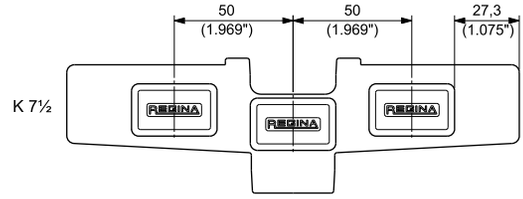

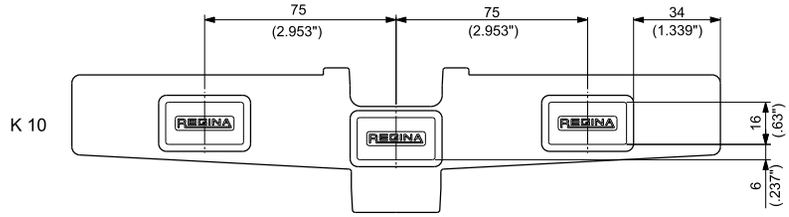

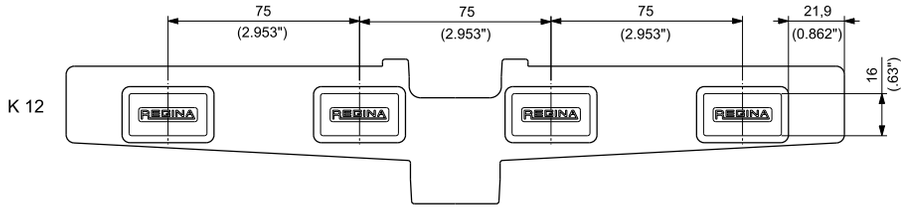

Materials see page 12
Sprockets see pages 149÷151
Corner tracks see page 321
Applications see page 20

MATERIALS			ITEM DESCRIPTION	PART NUMBER	WIDTH W		PLATE THICKNESS		SIDEFLEXING RADIUS		WORKING LOAD (25°C/77°F)		WEIGHT	
Plate	Pin	Rubber			mm	inch	mm	inch	mm R	inch	N	lbs	kg/m	lbs/ft
ULTRA PERFORMANCE HOMOPOLYMER DELRIN® UP	AUSTENITIC STAINLESS STEEL	THERMOPLASTIC TPE Hardness: 70 ShA	HFX 882T UP K 4 ½	HFX882TKG/000	114,3	4.50	4,8	0.19	609,6	24	3910	879	2,25	1.71
			HFX 882T UP K 7 ½	HFX882TKL/000	190,5	7.50	4,8	0.19	609,6	24	3910	879	2,64	1.78
			HFX 882T UP K 10	HFX882TKM/000	254,0	10.00	4,8	0.19	609,6	24	3910	879	2,95	1.98
			HFX 882T UP K 12	HFX882TKN/000	304,8	12.00	4,8	0.19	609,6	24	3910	879	3,25	2.18

Standard packaging: Rolls of 3,048 m (10 feet)

Copyright Regina Catene Calibrate s.p.a. - 2020, All rights reserved

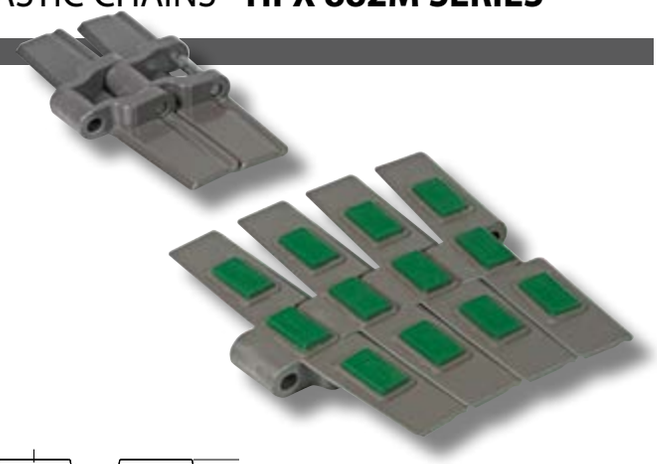

MAGNETIC
HEAVY DUTY SINGLE HINGE
REINFORCED TOP PLATE
PITCH 1 ½" (38,1 mm)
THICKNESS 4,8 mm (0.189")
HINGE 57 mm (2.244")

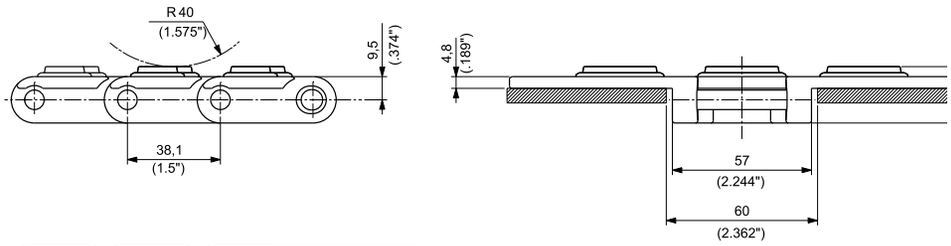

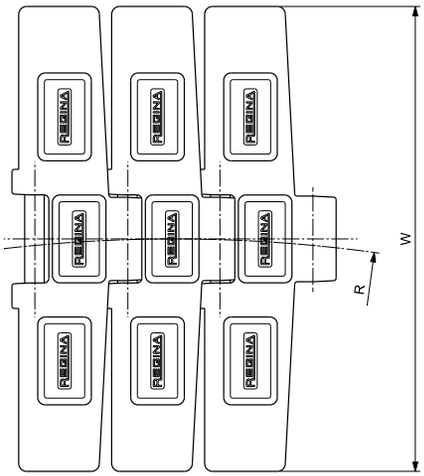

TRAVEL

RUBBER PAD POSITION

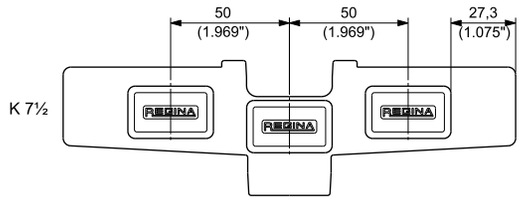

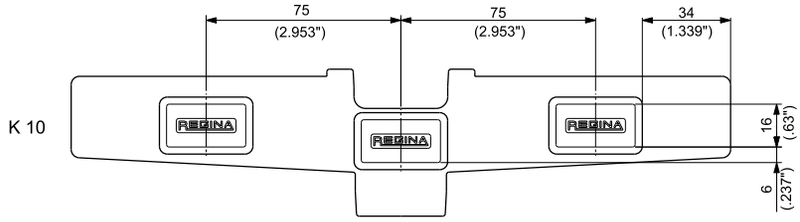

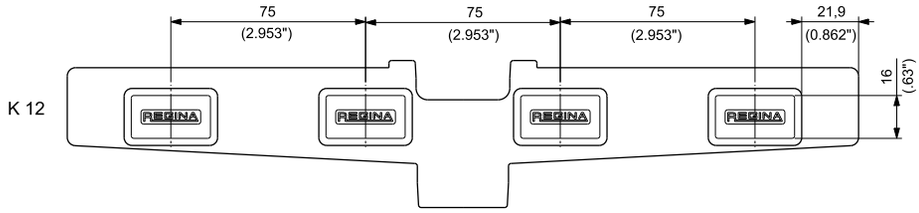

Materials see page 12
Sprockets see pages 149÷150
Corner tracks see pages 280
Applications see page 20

MATERIALS Plate	Pin	Rubber	ITEM DESCRIPTION	PART NUMBER	WIDTH W mm	inch	PLATE THICKNESS mm	inch	SIDEFLEXING RADIUS R mm	inch	WORKING LOAD (25°C/77°F) N	lbs	WEIGHT kg/m	lbs/ft
ULTRA PERFORMANCE HOMOPOLYMER DELRIN® UP	MAGNETIC STAINLESS STEEL	THERMOPLASTIC TPE Hardness: 70 ShA	HFX 882M UP K 7 ½	HFX882MUPKL/000	190,5	7.50	4,8	0.19	609,6	24	3910	879	2,40	1.61
			HFX 882M UP K 10	HFX882MUPKM/000	254,0	10.00	4,8	0.19	609,6	24	3910	879	2,71	1.82
			HFX 882M UP K 12	HFX882MUPKN/000	304,8	12.00	4,8	0.19	609,6	24	3910	879	3,02	2.03

Standard packaging: Rolls of 3,048 m (10 feet)

Copyright Regina Catene Calibrate s.p.a. - 2020, All rights reserved

TAB
PLASTIC FLIGHTS
¾" PITCH ROLLER CHAIN
BIDIRECTIONAL
THICKNESS 4 mm (0.157")
HINGE 32,1 mm (1.264")

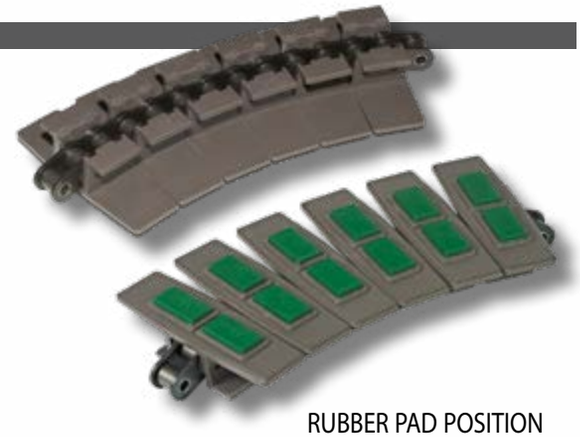

POWERED BY BASE ROLLER CHAIN MADE BY REGINA IN ITALY

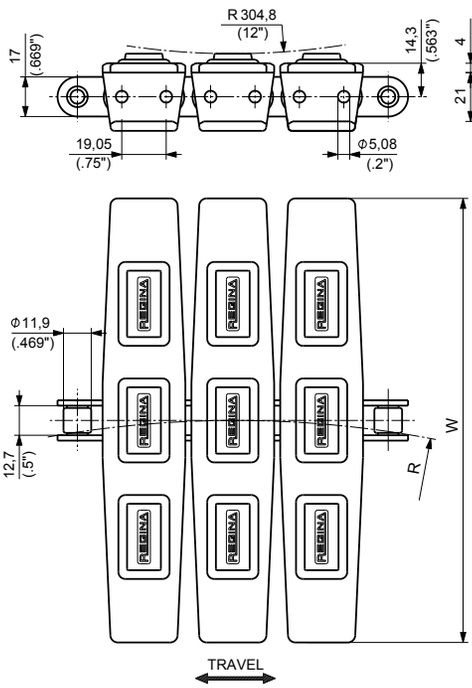

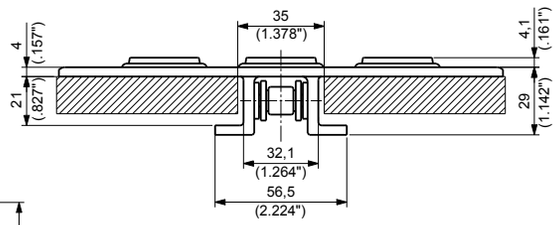

RUBBER PAD POSITION

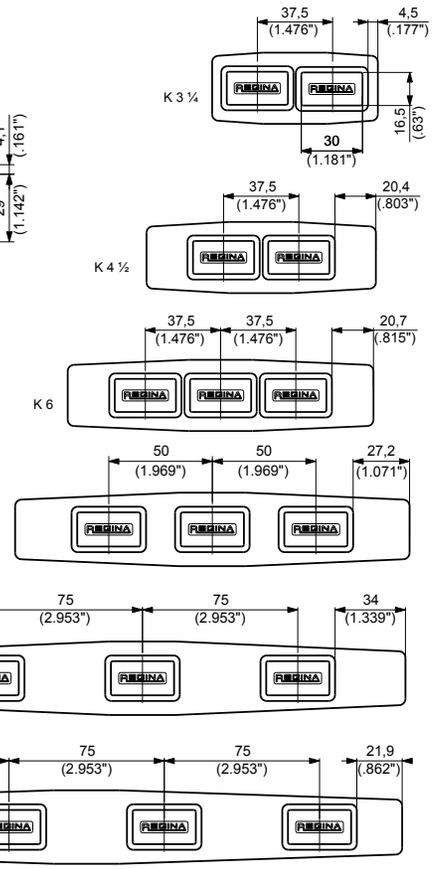

Materials see page 12
Sprockets see page 153
Corner tracks see page 322
Applications see page 20

MATERIALS Flight	Base Chain	Rubber	ITEM DESCRIPTION	PART NUMBER	CONNECTING LINK PART NUMBER	WIDTH W mm	inch	SIDEFLEXING RADIUS R mm	inch	WORKING LOAD (25°C/77°F) N	lbs	WEIGHT kg/m	lbs/ft
ULTRA PERFORMANCE HOMOPOLYMER DELRIN ® UP	CARBON STEEL S	THERMOPLASTIC TPE Hardness: 70 ShA	HFX 1873T UP K 3 ¼	HFX1873KD/000	18/0873	82,6	3.25	355,6	14	4500	1,013	2,42	1.63
			HFX 1873T UP K 4 ½	HFX1873KG/000		114,3	4.50	355,6	14	4500	1,013	2,51	1.69
			HFX 1873T UP K 6	HFX1873KH/000		152,4	6.00	457,2	18	4500	1,013	2,74	1.84
			HFX 1873T UP K 7 ½	HFX1873KL/000		190,5	7.50	457,2	18	4500	1,013	3,03	2.04
			HFX 1873T UP K 10	HFX1873KM/000		254,0	10.00	457,2	18	4500	1,013	3,16	2.12
			HFX 1873T UP K 12	HFX1873KN/000		304,8	12.00	609,6	24	4500	1,013	3,38	2.27
	STAINLESS STEEL SS	THERMOPLASTIC TPE Hardness: 70 ShA	HFX 1873T UP SS K 3 ¼	HFX1873SKD/000	18/SS873AB	82,6	3.25	355,6	14	3500	788	2,41	1.62
			HFX 1873T UP SS K 4 ½	HFX1873SKG/000		114,3	4.50	355,6	14	3500	788	2,46	1.65
			HFX 1873T UP SS K 6	HFX1873SKH/000		152,4	6.00	457,2	18	3500	788	2,72	1.83
			HFX 1873T UP SS K 7 ½	HFX1873SKL/000		190,5	7.50	457,2	18	3500	788	3,01	2.02
			HFX 1873T UP SS K 10	HFX1873SKM/000		254,0	10.00	457,2	18	3500	788	3,14	2.11
			HFX 1873T UP SS K 12	HFX1873SKN/000		304,8	12.00	609,6	24	3500	788	3,36	2.26

Standard packaging:
Rolls of 3,048 m (10 feet)

Copyright Regina Catene Calibrate s.p.a. - 2020, All rights reserved

REGINA CHAIN

PERFORMANCE IN MOTION

FliteTop®

Two-Piece Chains

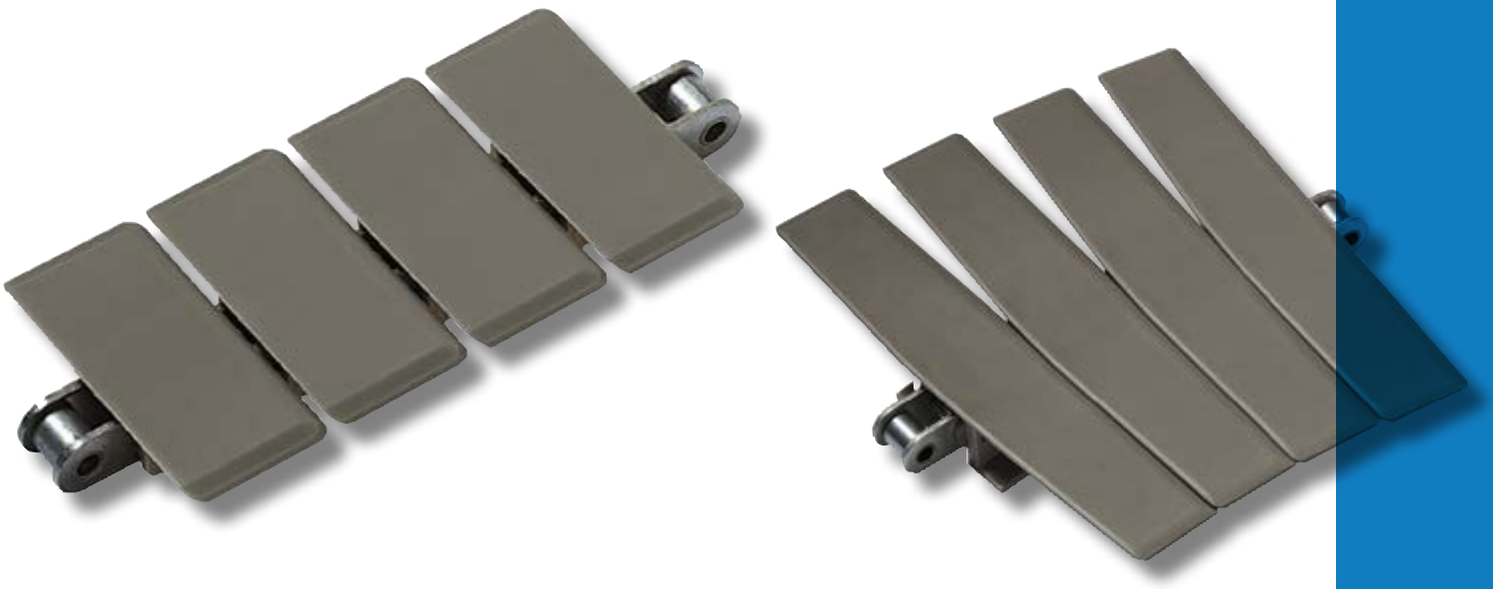

INDUSTRIES AND APPLICATIONS

TWO-PIECE CHAINS

Suitable for handling products (loose or packaged) where less stick slip effect and accurate product positioning (step by step applications) are required.

INDUSTRIES

Bottling and canning

Container manufacturing

Paper / Cardboard

Glass manufacturing

Automotive / Mechanical

APPLICATIONS

General single lane conveyors

Product handling within packaging machine

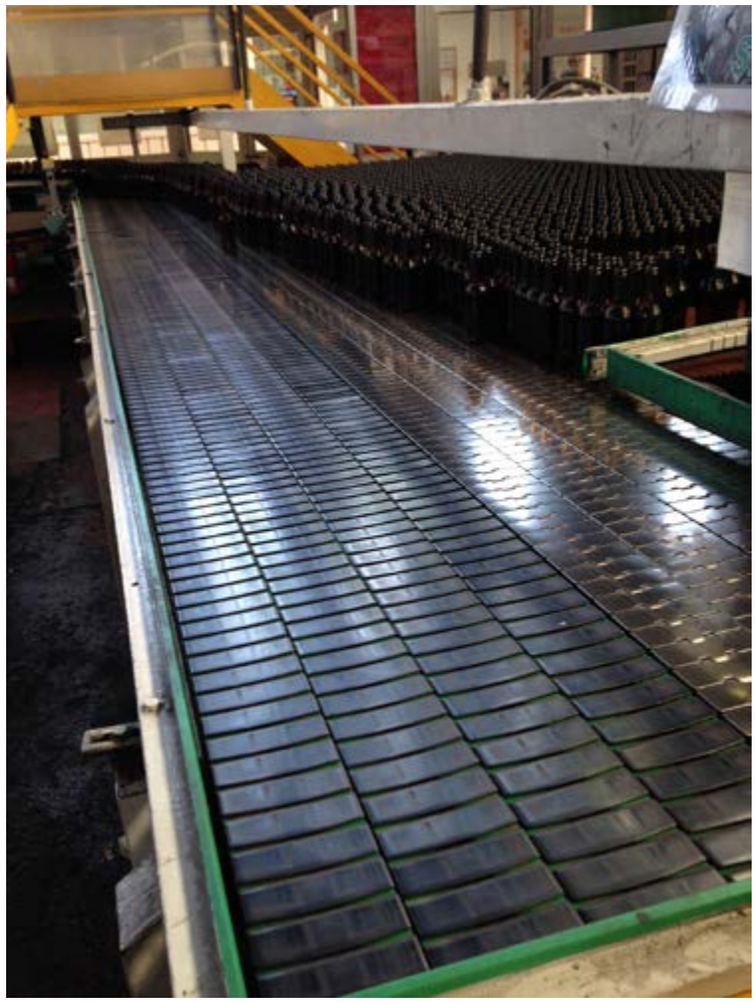

FEATURES

- Powered by ASA 40 and ASA 60 base roller chains made by REGINA in Italy.
- Stainless steel chain prelubricated with high performance lube suitable for the food industry (USDA H1 approved) which guarantees long-lasting effect for the chain.
- Great loading capacity at higher speed.
- Possibility of longer conveyor on a single drive.
- Easy replaceable top flights clipped on the protruding pins on the base roller chain.

Copyright Regina Catene Calibrate s.p.a. - 2020, All rights reserved

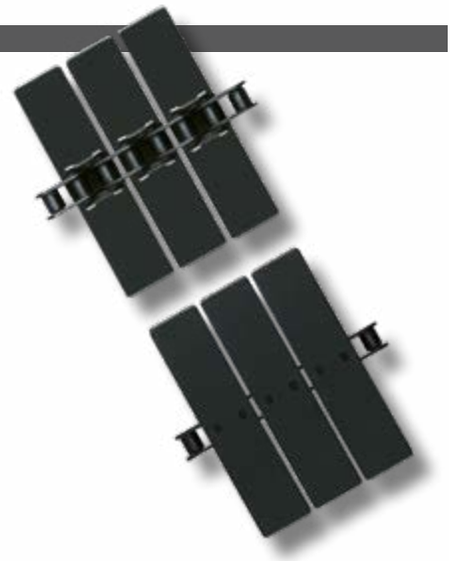

STEEL FLIGHTS
¾" PITCH ROLLER CHAIN (ASA 60)
BIDIRECTIONAL
THICKNESS 3 mm (0.118")
HINGE 27 mm (1.063")

POWERED BY BASE ROLLER CHAIN MADE BY REGINA IN ITALY

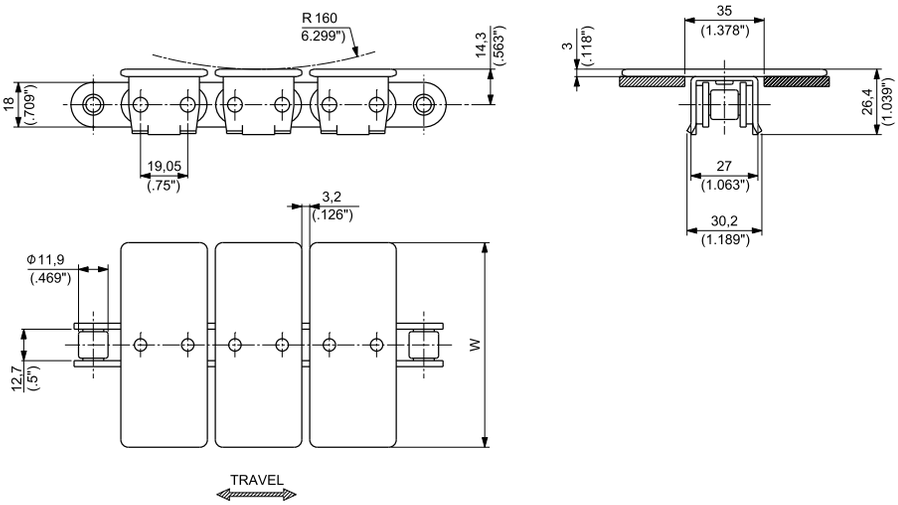

Materials see page 12
Sprockets see page 153
Applications see page 20

MATERIALS Flight	MATERIALS Base Chain	ITEM DESCRIPTION	PART NUMBER	CONNECTING LINK PART NUMBER	WIDTH W mm	WIDTH W inch	WORKING LOAD (25°C/77°F) N	WORKING LOAD (25°C/77°F) lbs	WEIGHT kg/m	WEIGHT lbs/ft
CARBON STEEL S	CARBON STEEL S	1864 K 3 ¼	1864KD/000	18/0864	82,6	3.25	5500	1,236	4,00	2.69
		1864 K 4 ½	1864KG/000		114,3	4.50	5500	1,236	4,73	3.18
		1864 K 6	1864KH/000		152,4	6.00	5500	1,236	5,60	3.76
		1864 K 7 ½	1864KL/000		190,5	7.50	5500	1,236	6,16	4.14
STAINLESS STEEL SS	STAINLESS STEEL SS	SS 1864 K 3 ¼	1864SSKD/000	18/SS864AB	82,6	3.25	4500	1,012	3,94	2.65
		SS 1864 K 4 ½	1864SSKG/000		114,3	4.50	4500	1,012	4,67	3.14
		SS 1864 K 6	1864SSKH/000		152,4	6.00	4500	1,012	5,33	3.58
		SS 1864 K 7 ½	1864SSKL/000		190,5	7.50	4500	1,012	6,09	4.10

Standard packaging: Rolls of 3,048 m (10 feet)

Copyright Regina Catene Calibrate s.p.a. - 2020, All rights reserved

TAB
STEEL FLIGHTS
¾" PITCH ROLLER CHAIN (ASA 60 SIDEBOW)
BIDIRECTIONAL
THICKNESS 3 mm (0.118")
HINGE 31,8 mm (1.252")
1874T: FLIGHT GAP 8,2 mm
1874TM: REDUCED FLIGHT GAP 5,7 mm

POWERED BY BASE ROLLER CHAIN MADE BY REGINA IN ITALY

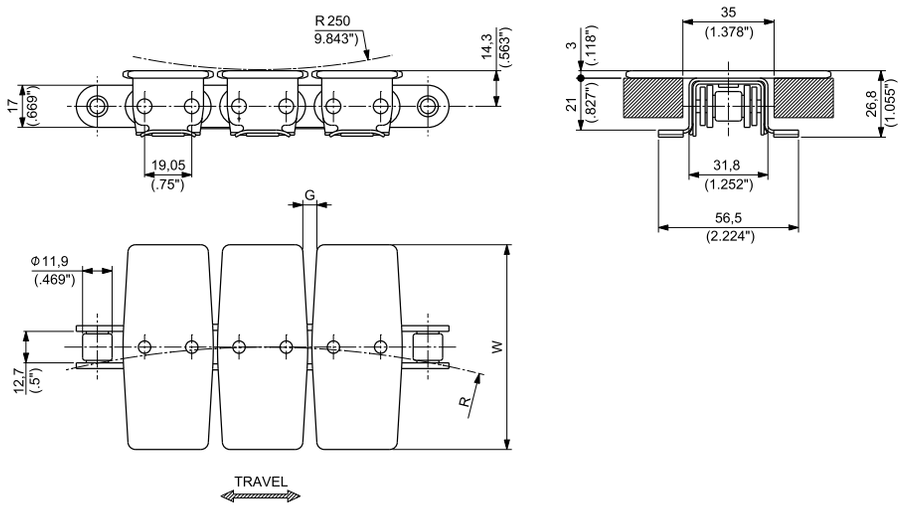

Materials see page 12
Sprockets see pages 153
Corner tracks see page 322
Applications see page 20

1874T

MATERIALS		ITEM DESCRIPTION	PART NUMBER	CONNECTING LINK PART NUMBER	WIDTH W		STRAIGHT RUNNING GAP G		SIDEFLEXING RADIUS R		WORKING LOAD (25°C/77°F)		WEIGHT	
Flight	Base Chain				mm	inch	mm	inch	mm	inch	N	lbs	kg/m	lbs/ft
CARBON STEEL	CARBON STEEL	1874T K 3 ¼	1874TKD/000	18/0873	82,6	3.25	8,2	0.323	381,0	15	4500	1,012	4,21	2.83
		1874T K 4 ½	1874TKG/000		114,3	4.50	8,2	0.323	381,0	15	4500	1,012	4,80	3.22
		1874T K 6	1874TKH/000		152,4	6.00	8,2	0.323	457,2	18	4500	1,012	5,59	3.75
		1874T K 7 ½	1874TKL/000		190,5	7.50	8,2	0.323	609,6	24	4500	1,012	6,31	4.24
STAINLESS STEEL	STAINLESS STEEL	SS 1874T K 3 ¼	1874TSSKD/000	18/SS873AB	82,6	3.25	8,2	0.323	381,0	15	3500	787	4,13	2.78
		SS 1874T K 4 ½	1874TSSKG/000		114,3	4.50	8,2	0.323	381,0	15	3500	787	4,72	3.17
		SS 1874T K 6	1874TSSKH/000		152,4	6.00	8,2	0.323	457,2	18	3500	787	5,51	3.70
		SS 1874T K 7 ½	1874TSSKL/000		190,5	7.50	8,2	0.323	609,6	24	3500	787	6,22	4.18

1874TM

MATERIALS		ITEM DESCRIPTION	PART NUMBER	CONNECTING LINK PART NUMBER	WIDTH W		STRAIGHT RUNNING GAP G		SIDEFLEXING RADIUS R		WORKING LOAD (25°C/77°F)		WEIGHT	
Flight	Base Chain				mm	inch			mm	inch	N	lbs	kg/m	lbs/ft
CARBON STEEL	CARBON STEEL	1874TM K 4 ½	1874MLKG/000	18/0873	114,3	4.50	5,7	0.224	609,6	24	4500	1012	4,80	3.22

Standard packaging: Rolls of 3,048 m (10 feet)

Copyright Regina Catene Calibrate s.p.a. - 2020, All rights reserved

PLASTIC FLIGHTS
½" PITCH ROLLER CHAIN (ASA 40)
THICKNESS 3.2 mm (0.126")
HINGE 20,6 mm (0.811")

POWERED BY BASE ROLLER CHAIN MADE BY REGINA IN ITALY

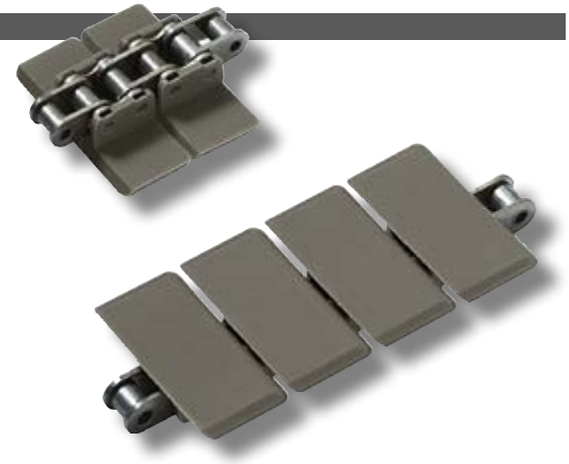

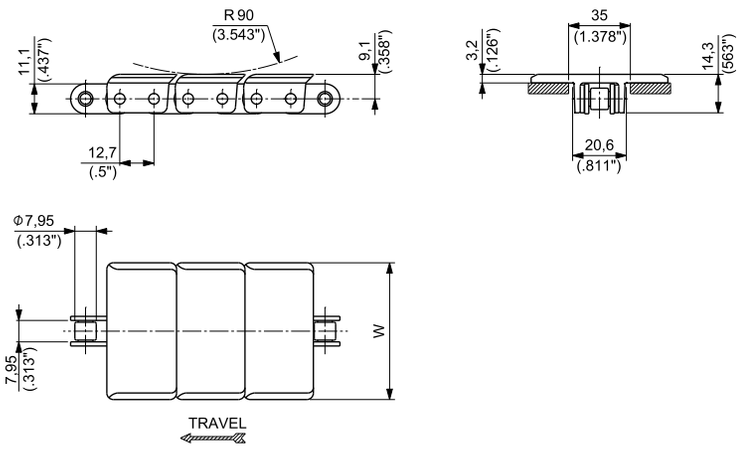

Materials see page 12
Sprockets see page 152
Applications see page 20

MATERIALS Flight	MATERIALS Base Chain	ITEM DESCRIPTION	PART NUMBER	CONNECTING LINK PART NUMBER	WIDTH W mm	WIDTH W inch	WORKING LOAD (25°C/77°F) N	WORKING LOAD lbs	WEIGHT kg/m	WEIGHT lbs/ft
ULTRA PERFORMANCE HOMOPOLYMER DELRIN ® UP	CARBON STEEL S	UP 843 K 1 ⅜	UP843KA/000	18/0843	34,9	1.37	3500	787	0,65	0.43
		UP 843 K 2	UP843KB/000		50,8	2.00	3500	787	0,71	0.48
		UP 843 K 3 ¼	UP843KD/000		82,6	3.25	3500	787	0,84	0.57
	STAINLESS STEEL SS	UP 843 SS K 1 ⅜	UP843SKA/000	18/SS843AB	34,9	1.37	2700	607	0,84	0.56
		UP 843 SS K 2	UP843SKB/000		50,8	2.00	2700	607	0,90	0.61
		UP 843 SS K 3 ¼	UP843SKD/000		82,6	3.25	2700	607	1,03	0.69

Standard packaging: Rolls of 3,048 m (10 feet)

Copyright Regina Catene Calibrate s.p.a. - 2020, All rights reserved

PLASTIC FLIGHTS
½" PITCH ROLLER CHAIN (ASA 40)
BIDIRECTIONAL
THICKNESS 3.2 mm (0.126")
HINGE 20,6 mm (0.811")

POWERED BY BASE ROLLER CHAIN MADE BY REGINA IN ITALY

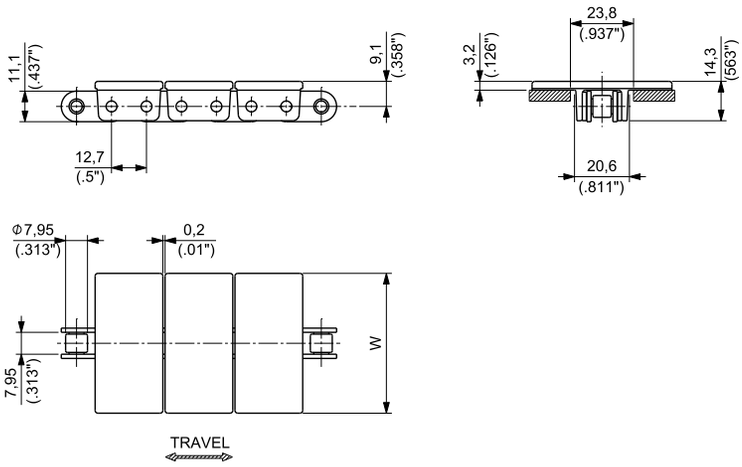

Materials see page 12
Sprockets see page 152
Applications see page 20

MATERIALS Flight	MATERIALS Base Chain	ITEM DESCRIPTION	PART NUMBER	CONNECTING LINK PART NUMBER	WIDTH W mm	WIDTH W inch	WORKING LOAD (25°C/77°F) N	WORKING LOAD lbs	WEIGHT kg/m	WEIGHT lbs/ft
ULTRA PERFORMANCE HOMOPOLYMER DELRIN ® UP	CARBON STEEL S	UP 845 K 1 ⅜	UP845KA/000	18/0843	34,9	1.37	3500	787	0,66	0.44
		UP 845 K 40	UP845KP/000		40,0	1.57	3500	787	0,69	0.46
		UP 845 K 2	UP845KB/000		50,8	2.00	3500	787	0,73	0.49
	STAINLESS STEEL SS	UP 845 SS K 1 ⅜	UP845SKA/000	18/SS843AB	34,9	1.37	2700	607	0,85	0.57
		UP 845 SS K 40	UP845SKP/000		40,0	1.57	2700	607	0,88	0.59
		UP 845 SS K 2	UP845SKB/000		50,8	2.00	2700	607	0,92	0.62

Standard packaging: Rolls of 3,048 m (10 feet)

Copyright Regina Catene Calibrate s.p.a. - 2020, All rights reserved

PLASTIC FLIGHTS
½" PITCH ROLLER CHAIN (ASA 40)
BIDIRECTIONAL
RAISED RIB
THICKNESS 12,2 mm (0.480")
HINGE 20,6 mm (0.811")

POWERED BY BASE ROLLER CHAIN MADE BY REGINA IN ITALY

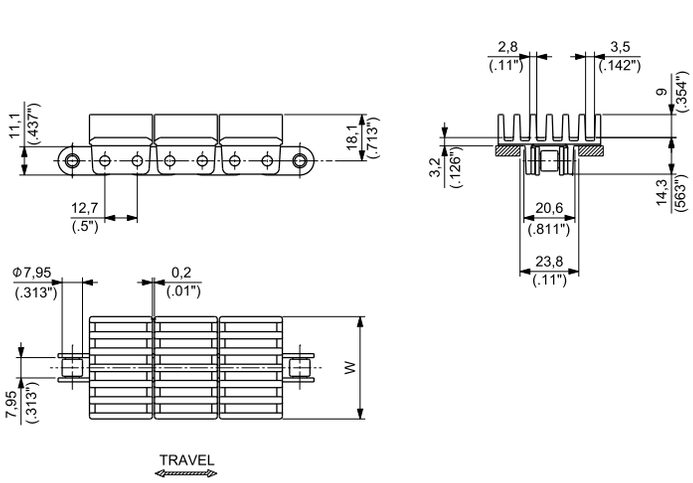

TRANSFER COMB

The comb is supplied with slot cover but without fastening screws.
One fastening screw is required for each comb.
It can be ordered using P/N 16300005.

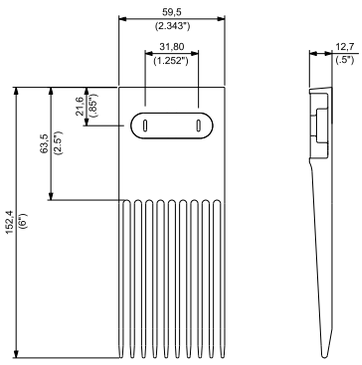

PART NUMBER: **TC845-01**
(Acetal Resin material)

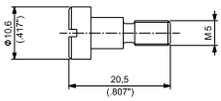

PART NUMBER: **16300005**
(Stainless Steel material)

Materials see page 12
Sprockets see page 152
Applications see page 20

MATERIALS		ITEM DESCRIPTION	PART NUMBER	CONNECTING LINK PART NUMBER	WIDTH W		WORKING LOAD (25°C/77°F)		WEIGHT	
Flight	Base Chain				mm	inch	N	lbs	kg/m	lbs/ft
ULTRA PERFORMANCE HOMOPOLYMER DELRIN ® UP	CHEMICALLY NICKEL CARBON STEEL (NC)	RR 845 UP NC K 40	R845UPCKP/000	18/843-003	40,0	1.57	3500	787	0,94	0.63
		RR 845 UP NC K 53,6	R845UPCKZA/000		53,6	2.11	3500	787	1,02	0.69

Standard packaging:
Rolls of 3,048 m (10 feet)

Copyright Regina Catene Calibrate s.p.a. - 2020, All rights reserved

PLASTIC FLIGHTS
1/2" PITCH ROLLER CHAIN (ASA 40)
BIDIRECTIONAL
RUBBERIZED RAISED RIB
THICKNESS 12,6 mm (0.496")
HINGE 20,6 mm (0.811")

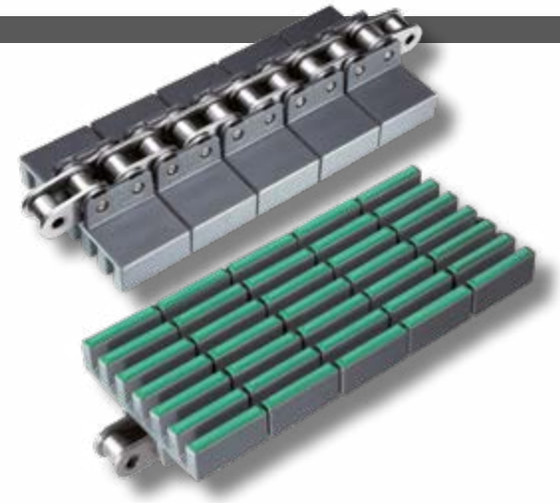

POWERED BY BASE ROLLER CHAIN MADE BY REGINA IN ITALY

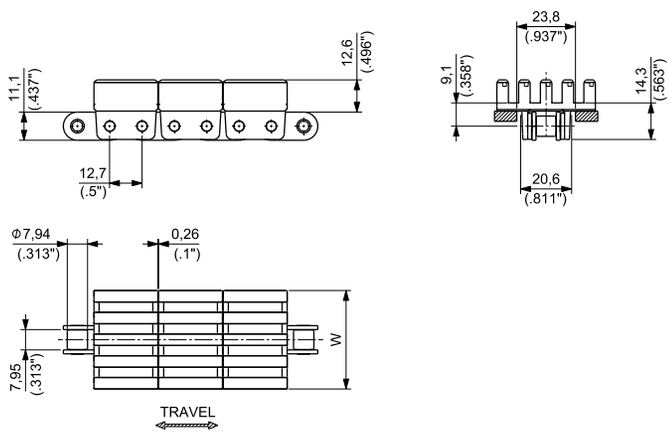

Materials see page 12
Combs see pages 81
Sprockets see page 152
Applications see page 20

MATERIALS			ITEM DESCRIPTION	PART NUMBER	CONNECTING LINK PART NUMBER	WIDTH W		WORKING LOAD (25°C/77°F)		WEIGHT	
Flight	Base Chain	Rubber				mm	Inch	N	lbs	kg/m	lbs/ft
SPECIAL POLIPROPYLENE PP	CHEMICALLY NICKEL CARBON STEEL (NC) S+NC	THERMOPLASTIC TPE Hardness: 50 ShA	HF RR 845 PP NC K 38,5	HFR845PPCKMB/000	18/843-003	38,5	1.57	3500	787	0,97	0.65
			HF RR 845 PP NC K 55,5	HFR845PPCKCC/000		55,5	2.11	3500	787	1,09	0.73

Standard packaging: Rolls of 3,048 m (10 feet)

Copyright Regina Catene Calibrate s.p.a. - 2020, All rights reserved

TRANSFER COMBS

Combs are supplied with slot covers but without fastening screws.
One fastening screw is required for each comb.
It can be ordered using P/N 16300020.

MATERIALS		
COMBS:	DG	ACETAL RESIN
SCREWS*:	SS	STAINLESS STEEL

*Screws are not included in the combs.

COMB FOR K 55,5 CHAIN

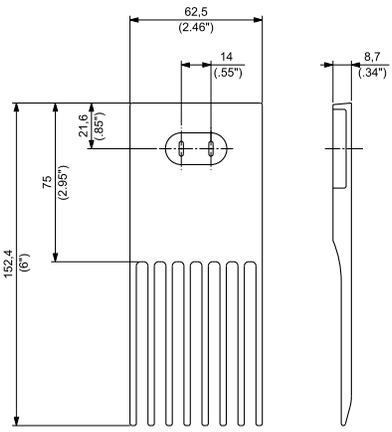

PART NUMBER **TC1600-01**

COMB FOR K 38,5 CHAIN

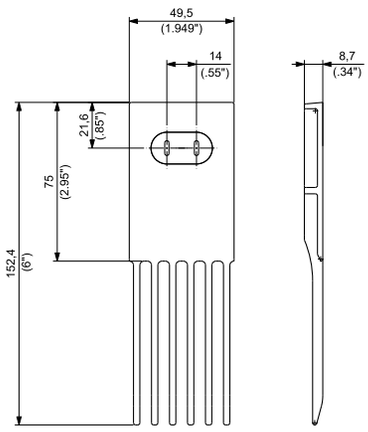

PART NUMBER **TC1600-03**

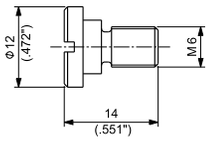

PART NUMBER **16300020**

Copyright Regina Catene Calibrate s.p.a. - 2020, All rights reserved

PLASTIC FLIGHTS
¾" PITCH ROLLER CHAIN
THICKNESS 4 mm (0.157")
HINGE 34,1 mm (1.343")

POWERED BY BASE ROLLER CHAIN MADE BY REGINA IN ITALY

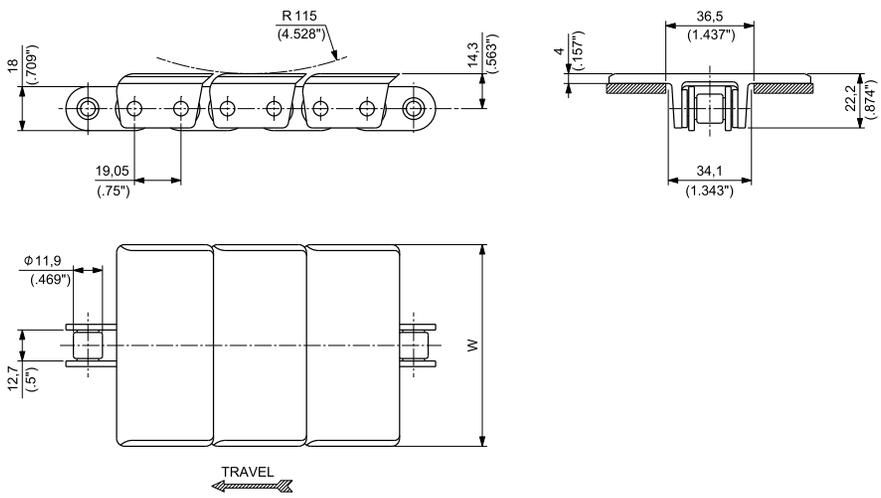

Materials see page 12
Sprockets see page 153
Applications see page 20

MATERIALS Flight	MATERIALS Base Chain	ITEM DESCRIPTION	PART NUMBER	CONNECTING LINK PART NUMBER	WIDTH W mm	WIDTH W inch	WORKING LOAD (25°C/77°F) N	WORKING LOAD lbs	WEIGHT kg/m	WEIGHT lbs/ft
ULTRA PERFORMANCE HOMOPOLYMER DELRIN ® UP	CARBON STEEL S	UP 863 K 3 ¼	UP863KD/000	18/0863	82,6	3.25	5000	1124	2,21	1.48
		UP 863 K 4 ½	UP863KG/000		114,3	4.50	5000	1124	2,38	1.60
		UP 863 K 6	UP863KH/000		152,4	6.00	5000	1124	2,58	1.73
		UP 863 K 7 ½	UP863KL/000		190,5	7.50	5000	1124	2,78	1.87
	STAINLESS STEEL SS	UP 863 SS K 3 ¼	UP863SKD/000	18/SS863AB	82,6	3.25	4000	899	2,16	1.45
		UP 863 SS K 4 ½	UP863SKG/000		114,3	4.50	4000	899	2,33	1.57
		UP 863 SS K 6	UP863SKH/000		152,4	6.00	4000	899	2,53	1.70
		UP 863 SS K 7 ½	UP863SKL/000		190,5	7.50	4000	899	2,73	1.84

Standard packaging: Rolls of 3,048 m (10 feet)

Copyright Regina Catene Calibrate s.p.a. - 2020, All rights reserved

TAB
PLASTIC FLIGHTS
½" PITCH ROLLER CHAIN
THICKNESS 3.2 mm (0.126")
HINGE 20 mm (0.787")

POWERED BY BASE ROLLER CHAIN MADE BY REGINA IN ITALY

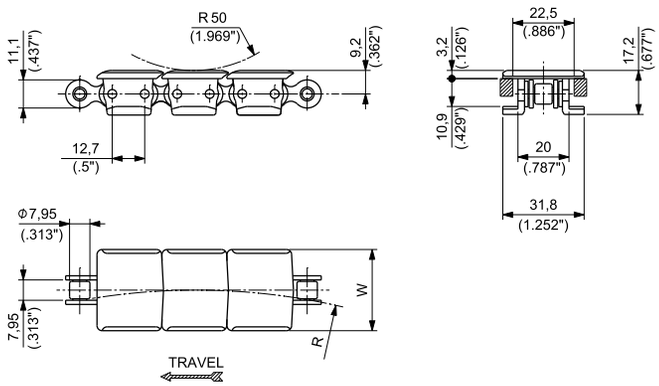

Materials see page 12
Sprockets see pages 152
Corner tracks see page 322
Applications see page 20

MATERIALS Flight	MATERIALS Base Chain	ITEM DESCRIPTION	PART NUMBER	CONNECTING LINK PART NUMBER	WIDTH W mm	WIDTH W inch	SIDEFLEXING RADIUS R mm	SIDEFLEXING RADIUS R inch	WORKING LOAD (25°C/77°F) N	WORKING LOAD (25°C/77°F) lbs	WEIGHT kg/m	WEIGHT lbs/ft
ULTRA PERFORMANCE HOMOPOLYMER DELRIN ® UP	CARBON STEEL S	UP 1843T K 1 ¼	UP1843KPA/000	18/1843	31,8	1.25	254	10	2600	584	0,80	0.54
	STAINLESS STEEL SS	UP 1843T SS K 1 ¼	UP1843SKPA/000	18/SS1843	31,8	1.25	254	10	2000	450	0,82	0.55
ABRASION RESISTANT POLYAMIDE AR	CARBON STEEL S	AR 1843T K 1 ¼	AR1843KPA/000	18/1843	31,8	1.25	254	10	2600	584	0,80	0.54

Standard packaging:
Rolls of 3,048 m (10 feet)

Copyright Regina Catene Calibrate s.p.a. - 2020, All rights reserved

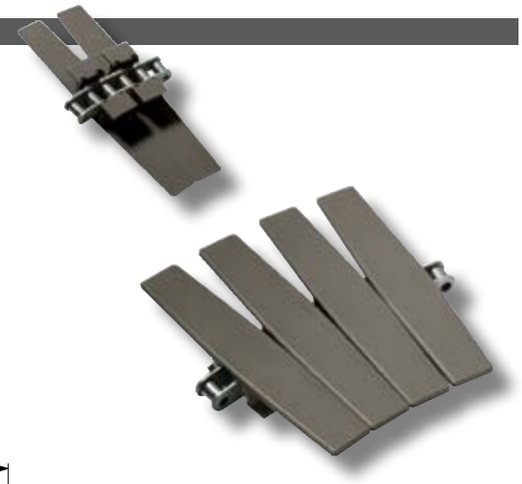

TAB
PLASTIC FLIGHTS
¾" PITCH ROLLER CHAIN
BIDIRECTIONAL
THICKNESS 4 mm (0.157")
HINGE 32,1 mm (1.264")

POWERED BY BASE ROLLER CHAIN MADE BY REGINA IN ITALY

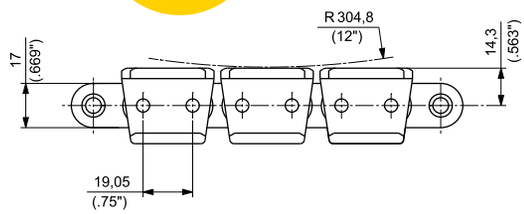

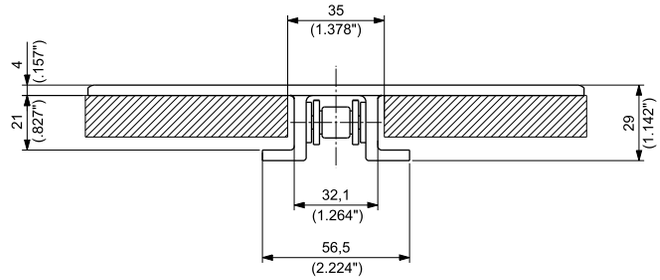

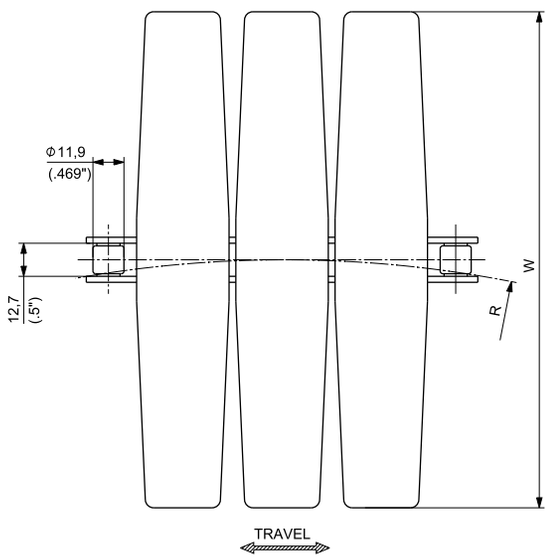

Materials see page 12
Sprockets see pages 153
Corner tracks see page 322
Applications see page 20

MATERIALS Flight	MATERIALS Base Chain	ITEM DESCRIPTION	PART NUMBER	CONNECTING LINK PART NUMBER	WIDTH W mm	WIDTH W inch	SIDEFLEXING RADIUS R mm	SIDEFLEXING RADIUS R inch	WORKING LOAD (25°C/77°F) N	WORKING LOAD (25°C/77°F) lbs	WEIGHT kg/m	WEIGHT lbs/ft
ULTRA PERFORMANCE HOMOPOLYMER DELRIN ® UP	CARBON STEEL S	UP 1873T K 3 ¼	UP1873KD/000	18/0873	82,6	3.25	355,6	14	4500	1,012	2,31	1.55
		UP 1873T K 4 ½	UP1873KG/000		114,3	4.50	355,6	14	4500	1,012	2,39	1.60
		UP 1873T K 6	UP1873KH/000		152,4	6.00	457,2	18	4500	1,012	2,57	1.73
		UP 1873T K 7 ½	UP1873KL/000		190,5	7.50	457,2	18	4500	1,012	2,86	1.92
		UP 1873T K 10	UP1873KM/000		254,0	10.00	457,2	18	4500	1,012	2,99	2.01
		UP 1873T K 12	UP1873KN/000		304,8	12.00	609,6	24	4500	1,012	3,15	2.12
	STAINLESS STEEL SS	UP 1873T SS K 3 ¼	UP1873SKD/000	18/SS873AB	82,6	3.25	355,6	14	3500	787	2,25	1.51
		UP 1873T SS K 4 ½	UP1873SKG/000		114,3	4.50	355,6	14	3500	787	2,33	1.57
		UP 1873T SS K 6	UP1873SKH/000		152,4	6.00	457,2	18	3500	787	2,52	1.69
		UP 1873T SS K 7 ½	UP1873SKL/000		190,5	7.50	457,2	18	3500	787	2,80	1.88
		UP 1873T SS K 10	UP1873SKM/000		254,0	10.00	457,2	18	3500	787	2,94	1.97
		UP 1873T SS K 12	UP1873SKN/000		304,8	12.00	609,6	24	3500	787	3,09	2.08

Standard packaging: Rolls of 3,048 m (10 feet)

Copyright Regina Catene Calibrate s.p.a. - 2020, All rights reserved

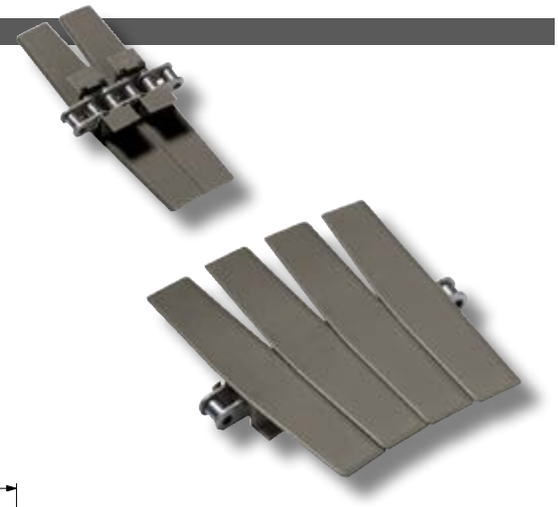

TAB
PLASTIC FLIGHTS
¾" PITCH ROLLER CHAIN
REDUCED FLIGHT GAP
THICKNESS 4 mm (0.157")
HINGE 32,1 mm (1.264")

POWERED BY BASE ROLLER CHAIN MADE BY REGINA IN ITALY

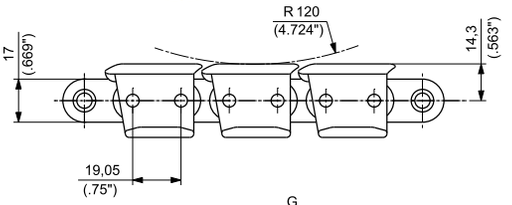

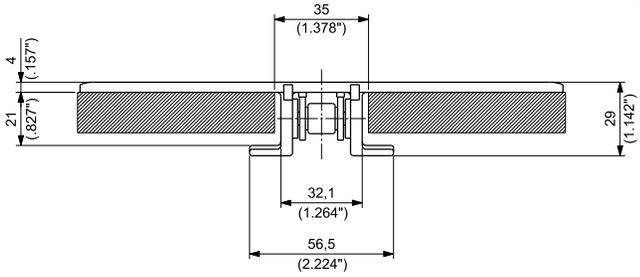

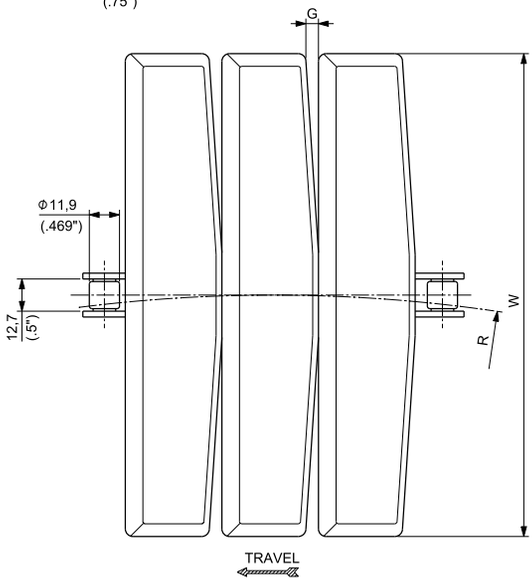

Gap comparison between 1863T and 1873T series

1863T

CHAIN WIDTH	SIDEFLEXING RADIUS R		SIDEFLEXING GAP G		STRAIGHT RUNNING GAP G	
	mm	inch	mm	inch	mm	inch
3 ¼	400,0	15.75	3,2	0.126	0	0
4 ½	457,2	18	5,8	0.228	1,3	0.051
7 ½	609,6	24	8,6	0.339	2,7	0.106
12	609,6	24	15,6	0.614	6,2	0.244

1873T

CHAIN WIDTH	SIDEFLEXING RADIUS R		SIDEFLEXING GAP G		STRAIGHT RUNNING GAP G	
	mm	inch	mm	inch	mm	inch
3 ¼	355,6	14	10,5	0.413	5,2	0.205
4 ½	355,6	14	13,5	0.531	6,7	0.264
7 ½	457,2	18	17,5	0.689	8,7	0.343
12	609,6	24	21,0	0.827	10,5	0.413

Materials see page 12
Sprockets see page 153
Corner tracks see page 322
Applications see page 20

MATERIALS Flight	MATERIALS Base Chain	ITEM DESCRIPTION	PART NUMBER	CONNECTING LINK PART NUMBER	WIDTH W mm	WIDTH W inch	SIDEFLEXING RADIUS R mm	SIDEFLEXING RADIUS R inch	WORKING LOAD (25°C/77°F) N	WORKING LOAD lbs	WEIGHT kg/m	WEIGHT lbs/ft
ULTRA PERFORMANCE HOMOPOLYMER DELRIN ® UP	CARBON STEEL S	UP 1863T K 2 ¼	UP1863KS/000	18/0873	57,1	2.25	457,2	18.00	4500	1,012	2,04	1.37
		UP 1863T K 3 ¼	UP1863KD/000		82,6	3.25	457,2	18.00	4500	1,012	2,17	1.46
		UP 1863T K 4 ½	UP1863KG/000		114,3	4.50	457,2	18.00	4500	1,012	2,32	1.56
		UP 1863T K 7 ½	UP1863KL/000		190,5	7.50	609,6	24.00	4500	1,012	2,68	1.80
		UP 1863T K 12	UP1863KN/000		304,8	12.00	609,6	24.00	4500	1,012	3,16	2.13
		UP 1863T K 16	UP1863KJ/000		406,4	16.00	750,0	29.53	4500	1,012	3,53	2.37
ABRASION RESISTANT POLYAMIDE (1) AR	CARBON STEEL S	AR 1863T K 3 ¼	AR1863KD/000		82,6	3.25	400,0	15.75	4500	1,012	2,12	1.42
		AR 1863T K 4 ½	AR1863KG/000		114,3	4.50	457,2	18.00	4500	1,012	2,24	1.50
ULTRA PERFORMANCE HOMOPOLYMER DELRIN ® UP	STAINLESS STEEL SS	UP 1863T SS K 2 ¼	UP1863SKS/000	18/SS873AB	57,1	2.25	457,2	18.00	3500	787	1,99	1.34
		UP 1863T SS K 3 ¼	UP1863SKD/000		82,6	3.25	457,2	18.00	3500	787	2,11	1.42
		UP 1863T SS K 4 ½	UP1863SKG/000		114,3	4.50	457,2	18.00	3500	787	2,27	1.52
		UP 1863T SS K 7 ½	UP1863SKL/000		190,5	7.50	609,6	24.00	3500	787	2,63	1.76
		UP 1863T SS K 12	UP1863SKN/000		304,8	12.00	609,6	24.00	3500	787	3,11	2.09
		UP 1863T SS K 16	UP1863SKJ/000		406,4	16.00	750,0	29.53	3500	787	3,47	2.33

(1) ACTUAL WIDTH CAN BE UP TO 0,5% GREATER THAN NOMINAL WIDTH

Standard packaging: Rolls of 3,048 m (10 feet)

Copyright Regina Catene Calibrate s.p.a. - 2020, All rights reserved

PLASTIC FLIGHTS
1" PITCH ROLLER CHAIN WITH INTEGRATED BEARINGS
THICKNESS 4,8 mm (0.189")
HINGE 41,3 mm (1.626")

NEW

POWERED BY BASE ROLLER CHAIN MADE BY REGINA IN ITALY

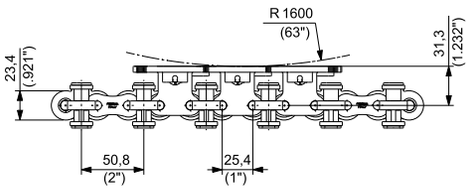

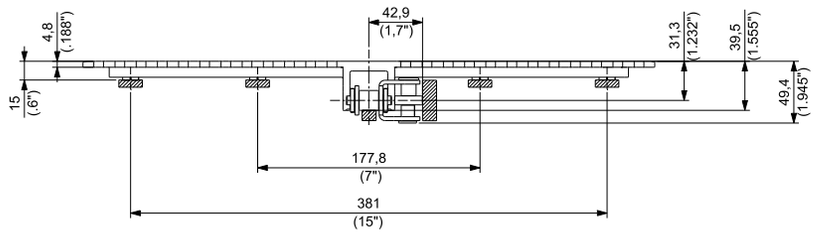

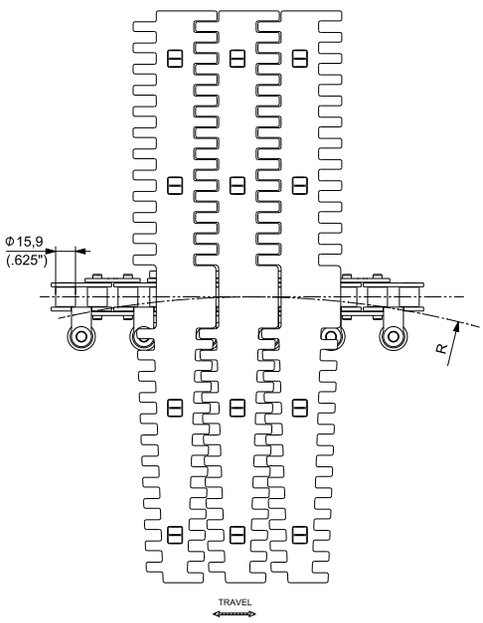

Materials see page 12
Sprockets see page 154
Applications see page 20

MATERIALS Flight	MATERIALS Base Chain	ITEM DESCRIPTION	PART NUMBER	CONNECTING LINK PART NUMBER	WIDTH W mm	WIDTH W inch	SIDEFLEXING RADIUS R mm	SIDEFLEXING RADIUS R inch	WORKING LOAD (25°C/77°F) N	WORKING LOAD (25°C/77°F) lbs	WEIGHT kg/m	WEIGHT lbs/ft
ULTRA PERFORMANCE HOMOPOLYMER DELRIN ® UP	CARBON STEEL	UP 1883 K 18	UP1883KZB/000	18/80SB-007	457,2	18	650	25.59	6500	1,461	7,30	4.91

Standard packaging: Rolls of 1,524 m (5 feet)

Copyright Regina Catene Calibrate s.p.a. - 2020, All rights reserved

RUBBERIZED TOP PLASTIC FLIGHTS
1" PITCH ROLLER CHAIN WITH INTEGRATED BEARINGS
THICKNESS 4,8 mm (0.189")
HINGE 41,3 mm (1.626")

NEW

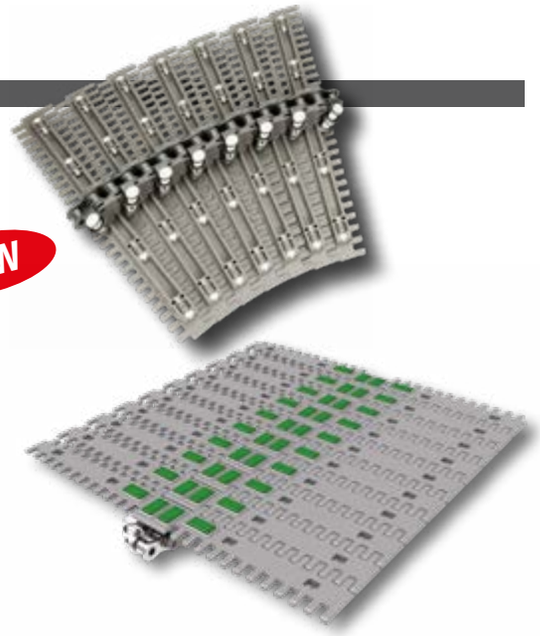

POWERED BY BASE ROLLER CHAIN MADE BY REGINA IN ITALY

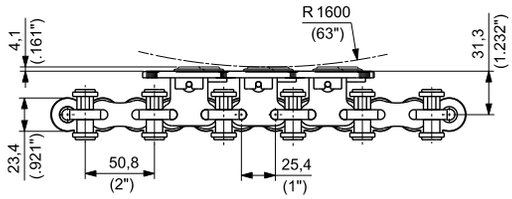

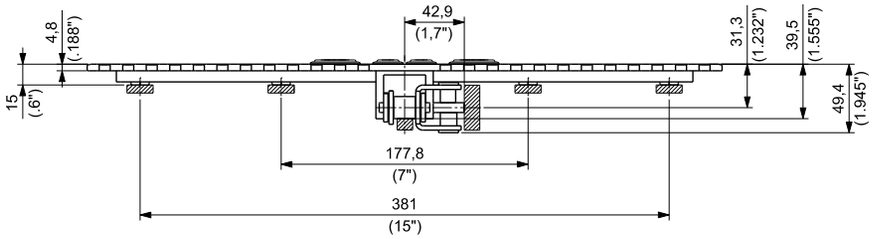

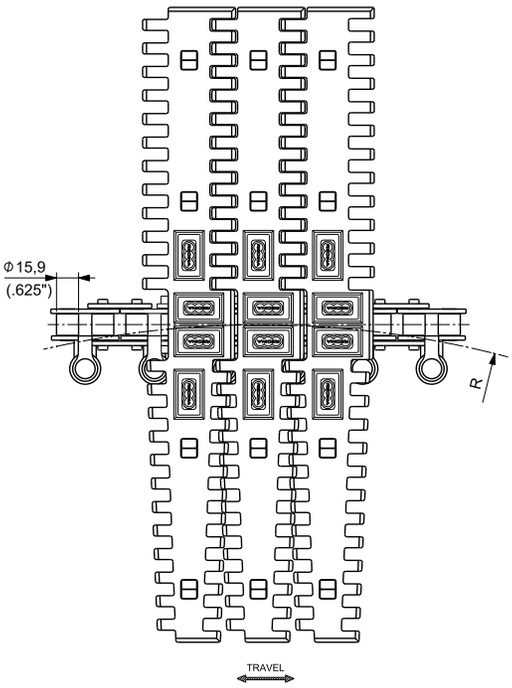

4- RUBBER PAD VERSION

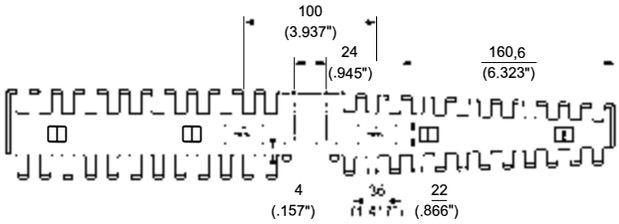

8- RUBBER PAD VERSION

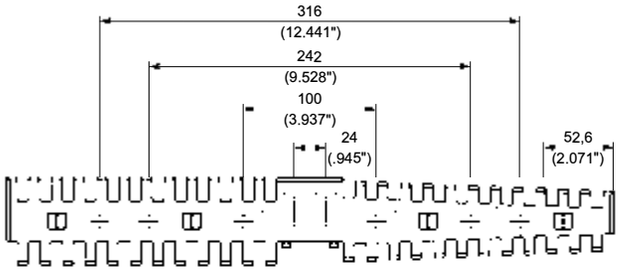

Materials see page 12
Sprockets see page 154
Applications see page 20

MATERIALS			ITEM DESCRIPTION	PART NUMBER	CONNECTING LINK	WIDTH W		SIDEFLEXING RADIUS R		WORKING LOAD (25°C/77°F)		WEIGHT	
Flight	Base Chain	Rubber				mm	inch	mm	inch	N	lbs	kg/m	lbs/ft
ULTRA PERFORMANCE HOMOPOLYMER DELRIN® UP	CARBON STEEL	THERMOPLASTIC TPE Hardness: 70 ShA	HFX 1883 UP K 18 (4-Rubber pad version)	HFX1883UPKZB/000	18/80SB-007	457,2	18	650	25.59	6500	1,461	7,54	5.08
			HFX 1883 UP K 18 (8-Rubber pad version)	HFX1883UPKZB/001	18/80SB-007	457,2	18	650	25.59	6500	1,461	7,75	5.22

Standard packaging: Rolls of 1,524 m (5 feet)

Copyright Regina Catene Calibrate s.p.a. - 2020, All rights reserved

REGINA CHAIN

PERFORMANCE IN MOTION

FliteTop®

Gripper Chains

INDUSTRIES AND APPLICATIONS

GRIPPER CHAINS

Suitable for handling plastic and glass bottles, aluminum and steel cans through an elevated path.

INDUSTRIES

Bottling and canning

Glass manufacturing

Container manufacturing

Food filling

APPLICATIONS

Elevator

Lowerator

Pass through conveyors

Rinsers

FEATURES

- Powered by ASA 40 and ASA 60 base roller chains made by REGINA in Italy. In particular:

  - Stainless steel chain prelubricated with high performance lube suitable for the food industry (USDA H1 approved) which guarantees long-lasting effect for the chain.

  - ENDURO maintenance free chain that eliminates need for periodic lubrication.

- Wide range of rubber pads exerting an ideal and fine-tuned force on the products for each specific application.

- Reliable fixing system of gripper to the flight by knurled austenitic stainless steel pin.

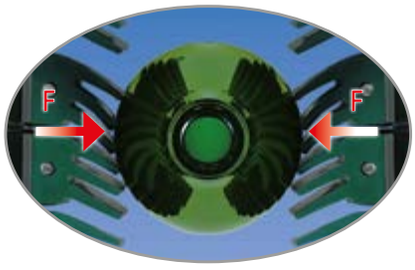

Copyright Regina Catene Calibrate s.p.a. - 2020, All rights reserved

Available with ENDURO maintenance free base chains.

- "Heavy wall" sintered bushing, impregnated with USDA H1 food approved oil
- Hard plated pin
- Galvanically coated plates and rollers for resistance to mildly aggressive environment

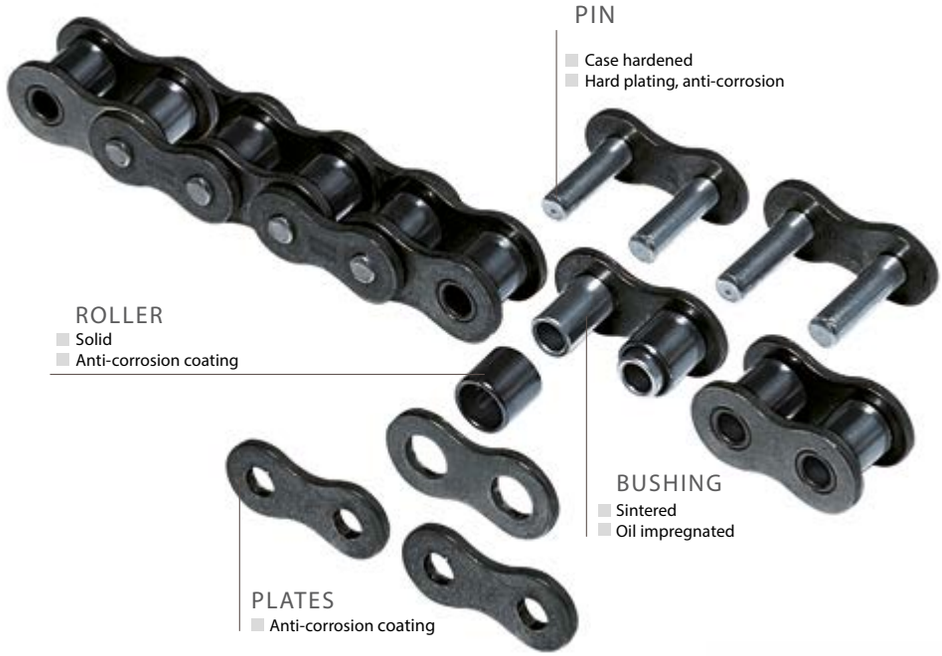

- Sintered bushing, impregnated with high performance lubricant
- Optimized bushing wall thickness for increased wear performance

BENEFITS

- DRAMATIC WEAR LIFE INCREASE COMPARED TO STANDARD CHAINS IN UN-LUBRICATED CONDITIONS
- ELIMINATE NEED FOR PERIODIC LUBRICATION
- NO PRODUCT OR EQUIPMENT CONTAMINATION
- RESISTANCE TO CORROSION IN MILDLY AGGRESSIVE ENVIRONMENT
- SAVINGS IN LUBRICATION AND MAINTENANCE COSTS

Comparative wear test - 16B-1 chains with sintered bushings.

Regina Catene Calibrate S.p.A. - Laboratory 13/07/2011

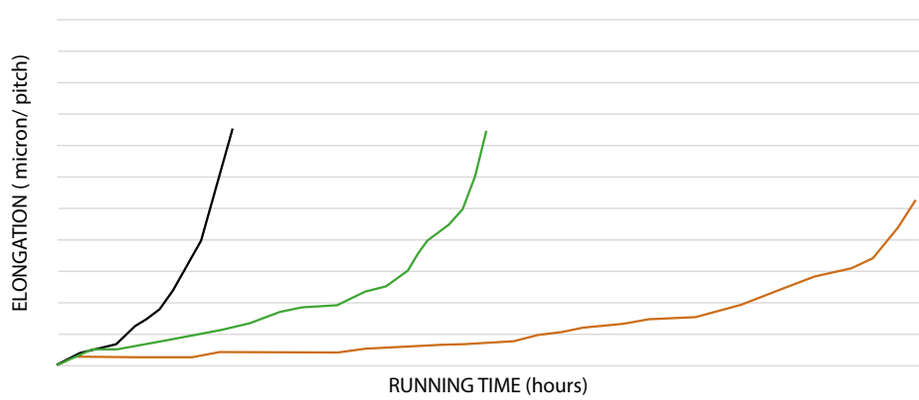

TEST CONDITIONS
Rpm: 234
Sprockets: z1=15 z2=15
Chain pull: 3'432 N (350kg)
Chain speed: 1,50 m/s
Specific pressure pin/bushing: 17 N/mm²
No lubrication during the test

Copyright Regina Catene Calibrate s.p.a. - 2020, All rights reserved

TAB STEEL FLIGHTS
¾ " PITCH ROLLER CHAIN
SHORT FINGERS RUBBER PAD
THICKNESS 3 mm (0.118")
HINGE 31,8 mm (1.252")

POWERED BY BASE ROLLER CHAIN MADE BY REGINA IN ITALY

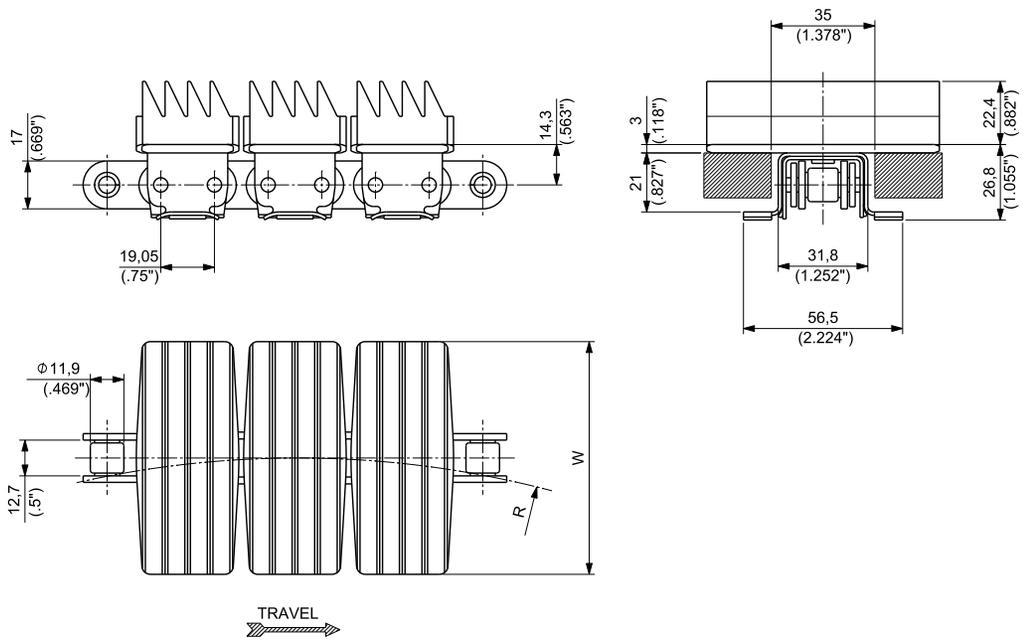

Materials see page 12
Sprockets see page 153
Corner tracks see page 322
Applications see page 20

MATERIALS			ITEM DESCRIPTION	PART NUMBER	CONNECTING LINK PART NUMBER	WIDTH W		SIDEFLEXING RADIUS R		WORKING LOAD (25°C/77°F)		WEIGHT	
Flight	Base Chain	Rubber				mm	inch	mm	inch	N	lbs	kg/m	lbs/ft
CARBON STEEL S	CARBON STEEL S	EPDM EPDM Hardness: 60 ShA	GV 1874T K 3 ¼	GV1874KD/010	18/0873	82,6	3.25	381	15	4500	1,012	5,65	3.79
			GV 1874T K 4 ½	GV1874KG/010		114,3	4.50	381	15	4500	1,012	6,71	4.51
STAINLESS STEEL SS	STAINLESS STEEL SS	EPDM EPDM Hardness: 60 ShA	GV 1874T SS K 3 ¼	GV1874SKD/010	18/SS873AB	82,6	3.25	381	15	3500	787	5,57	3.74
			GV 1874T SS K 4 ½	GV1874SKG/010		114,3	4.50	381	15	3500	787	6,63	4.46

Standard packaging:
Rolls of 3,048 m (10 feet)

Copyright Regina Catene Calibrate s.p.a. - 2020, All rights reserved

TAB STEEL FLIGHTS
¾ " PITCH ROLLER CHAIN
LONG FINGERS RUBBER PAD
THICKNESS 3 mm (0.118")
HINGE 31,8 mm (1.252")

POWERED BY BASE ROLLER CHAIN MADE BY REGINA IN ITALY

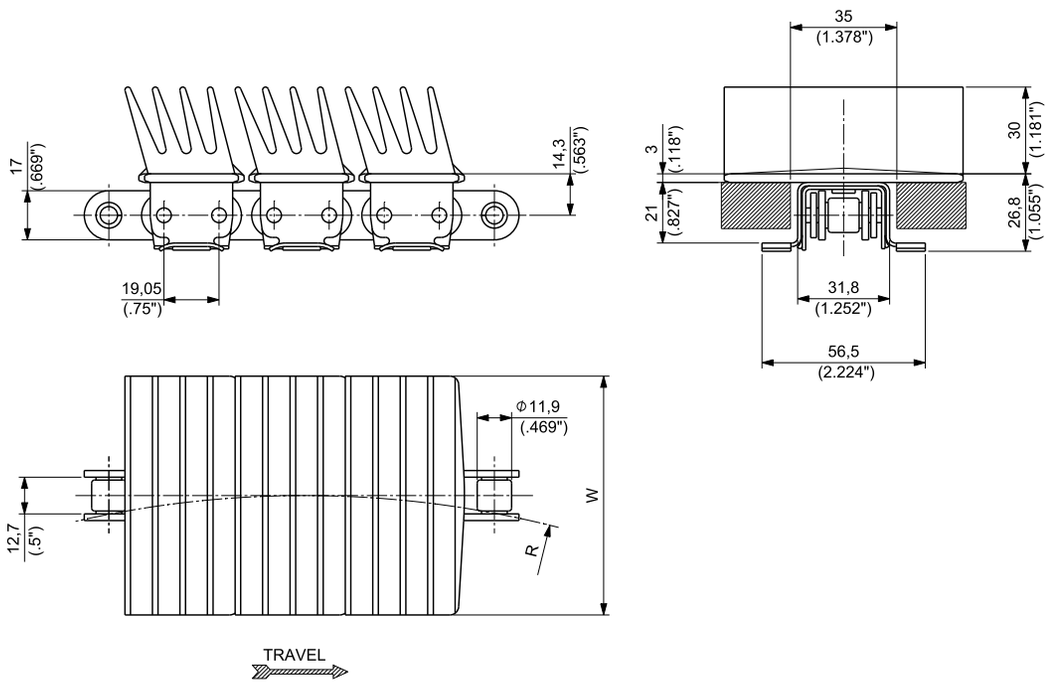

Materials see page 12
Sprockets see page 153
Corner tracks see page 322
Applications see page 20

MATERIALS			ITEM DESCRIPTION	PART NUMBER	CONNECTING LINK PART NUMBER	WIDTH W		SIDEFLEXING RADIUS R		WORKING LOAD (25°C/77°F)		WEIGHT	
Flight	Base Chain	Rubber				mm	inch	mm	inch	N	lbs	kg/m	lbs/ft
CARBON STEEL S	CARBON STEEL S	EPDM EPDM Hardness: 60 ShA	EV 1874T K 3 ¼	EV1874KD/010	18/0873	82,6	3.25	381	15	4500	1,012	5,67	3.81
STAINLESS STEEL SS	STAINLESS STEEL SS	EPDM EPDM Hardness: 60 ShA	EV 1874T SS K 3 ¼	EV1874SKD/010	18/SS873AB	82,6	3.25	381	15	3500	787	5,60	3.76

Standard packaging: Rolls of 3,048 m (10 feet)

Copyright Regina Catene Calibrate s.p.a. - 2020, All rights reserved

TAB PLASTIC FLIGHTS
¾ " PITCH ROLLER CHAIN
SHORT FINGERS RUBBER PAD
THICKNESS 4 mm (0.157")
HINGE 32,1 mm (1.264")

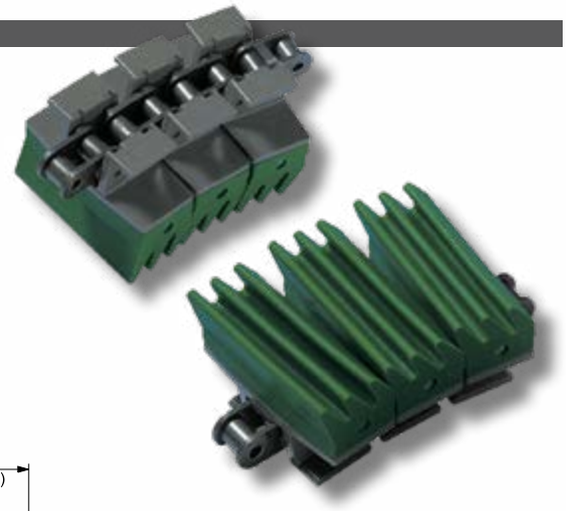

DUPONT® KEVLAR® INSIDE

POWERED BY BASE ROLLER CHAIN MADE BY REGINA IN ITALY

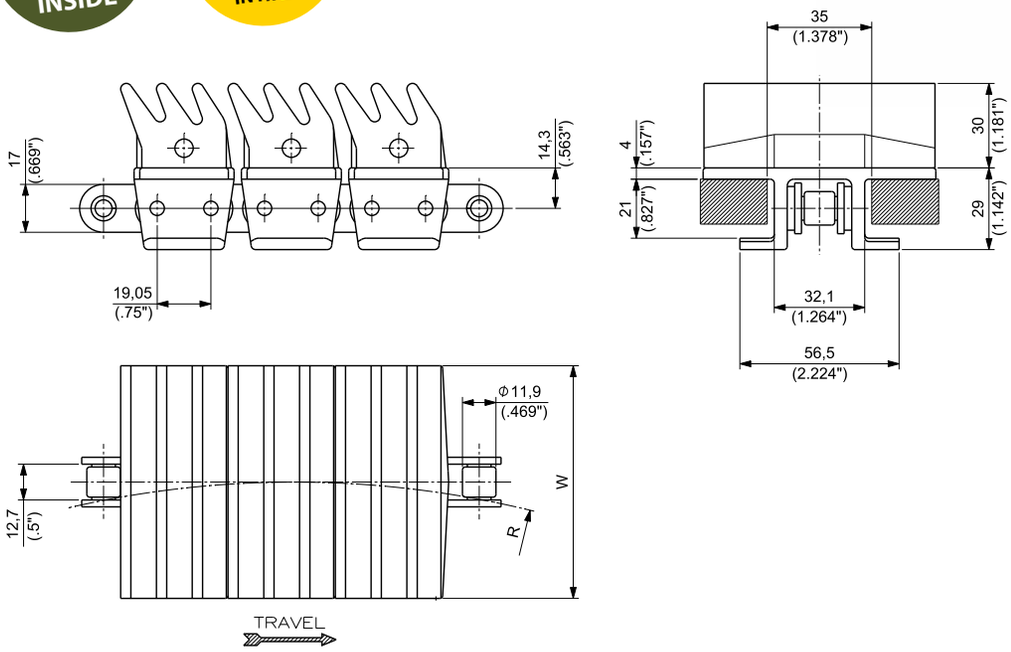

Materials see page 12
Sprockets see page 153
Corner tracks see page 322
Applications see page 20

Flight	MATERIALS Base chain	Rubber	ITEM DESCRIPTION	PART NUMBER	CONNECTING LINK PART NUMBER	WIDTH W mm	WIDTH W inch	SIDEFLEXING RADIUS R mm	SIDEFLEXING RADIUS R inch	WORKING LOAD (25°C/77°F) N	WORKING LOAD (25°C/77°F) lbs	WEIGHT kg/m	WEIGHT lbs/ft
ULTRA PERFORMANCE HOMOPOLYMER DELRIN® UP	CARBON STEEL S	THERMOPLASTIC TPE Hardness: 50 ShA	GW 1873T UP K 3 ¼	GW1873KD/000	18/0873	82,6	3.25	355,6	14	4500	1012	4,54	3.05
	STAINLESS STEEL SS		GW 1873T UP SS K 3 ¼	GW1873SKD/000	18/SS873AB	82,6	3.25	355,6	14	3500	787	4,49	3.02
	MAINTENANCE FREE CARBON STEEL BS		GW 1873T UP BS K 3 ¼	GW1873UPBKD/000	18/873BS	82,6	3.25	355,6	14	3500	787	4,28	2.87
SPECIAL DELRIN® REINFORCED WITH KEVLAR® DK2™	CARBON STEEL S	THERMOPLASTIC TPE Hardness: 50 ShA	GW 1873T D2K K 3 ¼	GW1873D2KKD/000	18/0873	82,6	3.25	355,6	14	4500	1012	4,54	3.05
	STAINLESS STEEL SS		GW 1873T D2K SS K 3 ¼	GW1873D2KSKD/000	18/SS873AB	82,6	3.25	355,6	14	3500	787	4,49	3.02
	MAINTENANCE FREE CARBON STEEL BS		GW 1873T D2K BS K 3 ¼	GW1873D2KBKD/000	18/873BS	82,6	3.25	355,6	14	3500	787	4,28	2.87

Standard packaging: Rolls of 3,048 m (10 feet)

Copyright Regina Catene Calibrate s.p.a. - 2020, All rights reserved

TWO-PIECE GRIPPER CHAINS - **EW 1873T SERIES**

TAB PLASTIC FLIGHTS
¾ " PITCH ROLLER CHAIN
LONG FINGERS RUBBER PAD
THICKNESS 4 mm (0.157")
HINGE 32,1 mm (1.264")

DUPONT® KEVLAR® INSIDE

POWERED BY BASE ROLLER CHAIN MADE BY REGINA IN ITALY

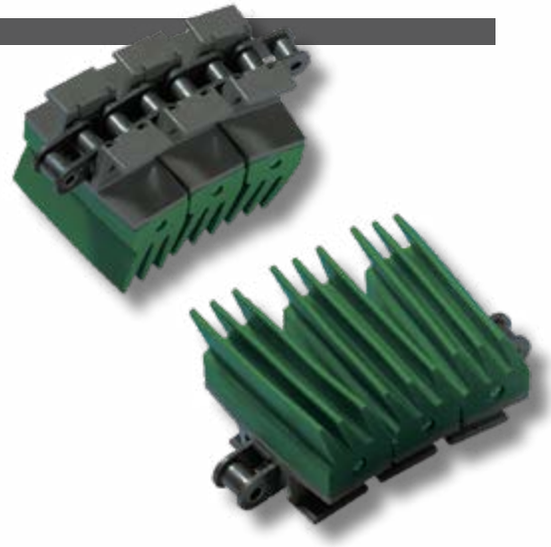

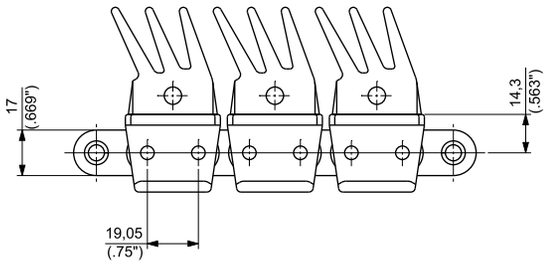

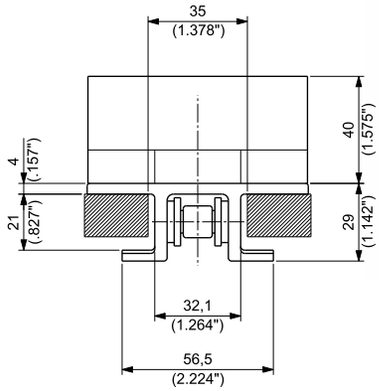

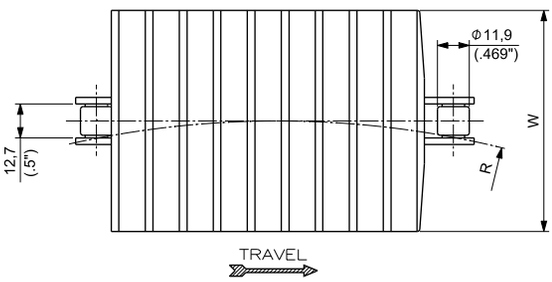

Materials see page 12
Sprockets see page 153
Corner tracks see page 322
Applications see page 20

Flight	MATERIALS Base chain	Rubber	ITEM DESCRIPTION	PART NUMBER	CONNECTING LINK PART NUMBER	WIDTH W mm	inch	SIDEFLEXING RADIUS R mm	inch	WORKING LOAD (25°C/77°F) N	lbs	WEIGHT kg/m	lbs/ft
ULTRA PERFORMANCE HOMOPOLYMER DELRIN® UP	CARBON STEEL S	THERMOPLASTIC TPE Hardness: 50 ShA	EW 1873T UP K 3 ¼	EW1873KD/000	18/0873	82,6	3.25	355,6	14.00	4500	1012	4,68	3.14
			EW 1873T UP K 4 ½	EW1873UPKG/000		114,3	4.50	355,6	14.00	4500	1012	5,72	3.84
	STAINLESS STEEL SS		EW 1873T UP SS K 3 ¼	EW1873SKD/000	18/SS873AB	82,6	3.25	355,6	14.00	3500	787	4,62	3.11
			EW 1873T UP SS K 4 ½	EW1873UPSKG/000		114,3	4.50	355,6	14.00	3500	787	5,67	3.81
	MAINTENANCE FREE CARBON STEEL BS		EW 1873T UP BS K 3 ¼	EW1873UPBKD/000	18/873BS	82,6	3.25	355,6	14.00	3500	787	4,38	2.95
			EW 1873T UP BS K 4 ½	EW1873UPBKG/000		114,3	4.50	355,6	14.00	3500	787	5,32	3.57
	STAINLESS STEEL SS	HEAT STABILZED THERMOPLASTIC HS Hardness: 45 ShA	NEW EW 1873T UP HS SS K 3 ¼	EW1873HSSKD/003	18/SS873AB	82,6	3.25	355,6	14.00	3500	787	4,62	3.11
SPECIAL DELRIN® REINFORCED WITH KEVLAR® DK2™	CARBON STEEL S	THERMOPLASTIC TPE Hardness: 50 ShA	EW 1873T D2K K 3 ¼	EW1873D2KKD/000	18/0873	82,6	3.25	355,6	14.00	4500	1012	4,68	3.14
			EW 1873T D2K K 4 ½	EW1873D2KKG/000		114,3	4.50	355,6	14.00	4500	1012	5,72	3.84
	STAINLESS STEEL SS		EW 1873T D2K SS K 3 ¼	EW1873D2KSKD/000	18/SS873AB	82,6	3.25	355,6	14.00	3500	787	4,62	3.11
			EW 1873T D2K SS K 4 ½	EW1873D2KSKG/000		114,3	4.50	355,6	14.00	3500	787	5,67	3.81
	MAINTENANCE FREE CARBON STEEL BS		EW 1873T D2K BS K 3 ¼	EW1873D2KBKD/000	18/873BS	82,6	3.25	355,6	14.00	3500	787	4,38	2.95
			EW 1873T D2K BS K 4 ½	EW1873D2KBKG/000		114,3	4.50	355,6	14.00	3500	787	5,32	3.57
	STAINLESS STEEL SS	HEAT STABILZED THERMOPLASTIC HS Hardness: 45 ShA	NEW EW 1873T D2K HS SS K 3 ¼	EW1873HSSKD/002	18/SS873AB	82,6	3.25	355,6	14.00	3500	787	4,62	3.11

Standard packaging: Rolls of 3,048 m (10 feet)

Copyright Regina Catene Calibrate s.p.a. - 2020, All rights reserved

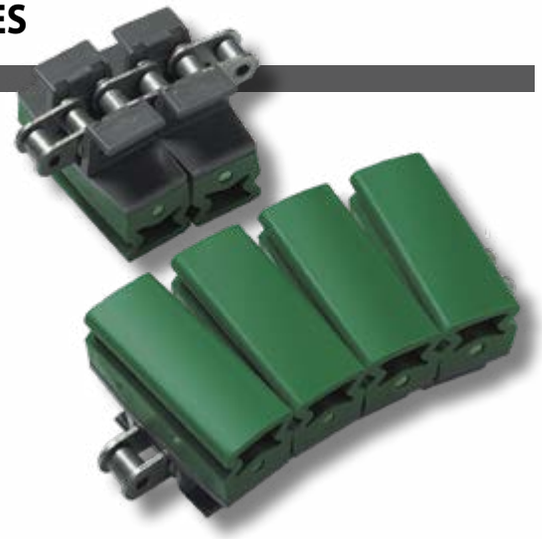

TAB PLASTIC FLIGHTS
¾ " PITCH ROLLER CHAIN
D-SHAPE RUBBER PAD
THICKNESS 4 mm (0.157")
HINGE 32,1 mm (1.264")

DUPONT® KEVLAR® INSIDE

POWERED BY BASE ROLLER CHAIN MADE BY REGINA IN ITALY

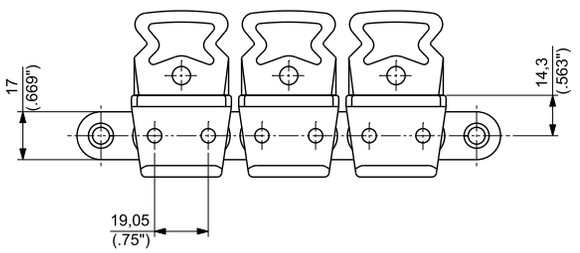

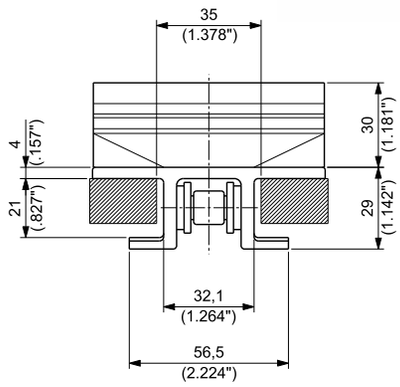

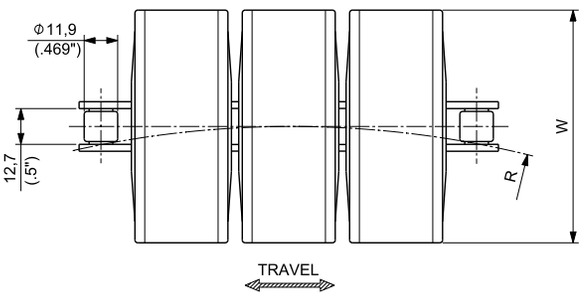

Materials see page 12
Sprockets see page 153
Corner tracks see page 322
Applications see page 20

Flight	MATERIALS Base chain	MATERIALS Rubber	ITEM DESCRIPTION	PART NUMBER	CONNECTING LINK PART NUMBER	WIDTH W mm	WIDTH W inch	SIDEFLEXING RADIUS R mm	SIDEFLEXING RADIUS R inch	WORKING LOAD (25°C/77°F) N	WORKING LOAD (25°C/77°F) lbs	WEIGHT kg/m	WEIGHT lbs/ft
ULTRA PERFORMANCE HOMOPOLYMER DELRIN ® UP	CARBON STEEL S	THERMOPLASTIC TPE Hardness: 50 ShA	GD 1873T UP K 3 ¼	GD1873UPKD/000	18/0873	82,6	3.25	355,6	14	4500	1012	4,29	2.88
	STAINLESS STEEL SS		GD 1873T UP SS K 3 ¼	GD1873UPSKD/000	18/SS873AB	82,6	3.25	355,6	14	3500	787	4,24	2.85
	MAINTENANCE FREE CARBON STEEL BS		GD 1873T UP BS K 3 ¼	GD1873UPBKD/000	18/873BS	82,6	3.25	355,6	14	3500	787	4,07	2.73
SPECIAL DELRIN ® REINFORCED WITH KEVLAR ® DK2™	CARBON STEEL S	THERMOPLASTIC TPE Hardness: 50 ShA	GD 1873T D2K K 3 ¼	GD1873D2KKD/000	18/0873	82,6	3.25	355,6	14	4500	1012	4,29	2.88
	STAINLESS STEEL SS		GD 1873T D2K SS K 3 ¼	GD1873D2KSKD/000	18/SS873AB	82,6	3.25	355,6	14	3500	787	4,24	2.85
	MAINTENANCE FREE CARBON STEEL BS		GD 1873T D2K BS K 3 ¼	GD1873D2KBKD/000	18/873BS	82,6	3.25	355,6	14	3500	787	4,07	2.73

Standard packaging: Rolls of 3,048 m (10 feet)

Copyright Regina Catene Calibrate s.p.a. - 2020, All rights reserved

TAB PLASTIC FLIGHTS
¾ " PITCH ROLLER CHAIN
U-SHAPE RUBBER PAD
THICKNESS 4 mm (0.157")
HINGE 32,1 mm (1.264")

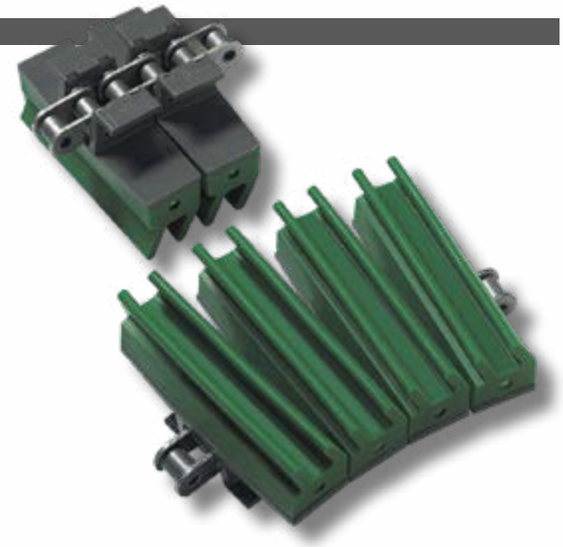

DUPONT® KEVLAR® INSIDE

POWERED BY BASE ROLLER CHAIN MADE BY REGINA IN ITALY

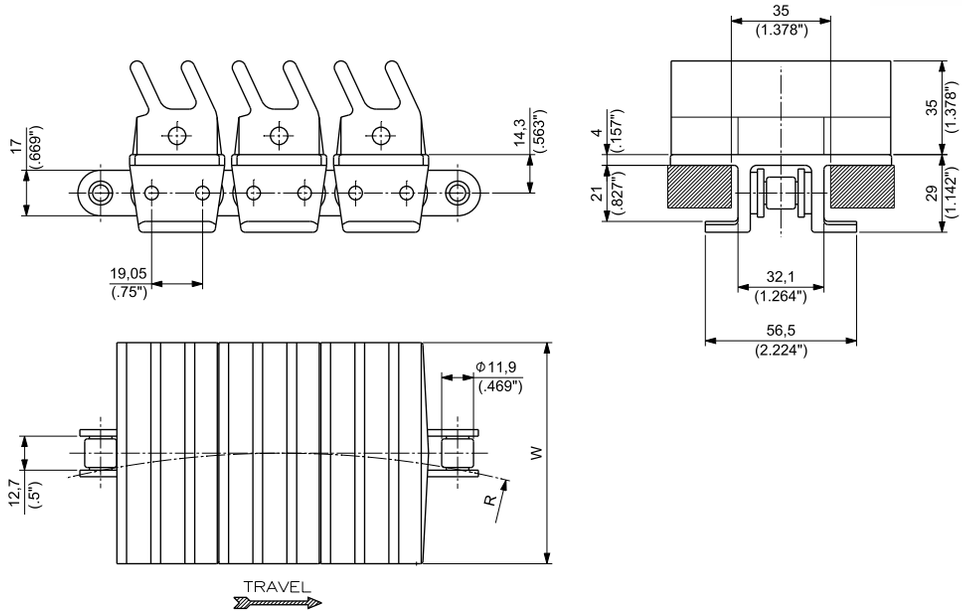

Materials see page 12
Sprockets see page 153
Corner tracks see page 322
Applications see page 20

Flight	Base chain	Rubber	ITEM DESCRIPTION	PART NUMBER	CONNECTING LINK PART NUMBER	WIDTH W mm	WIDTH W inch	SIDEFLEXING RADIUS R mm	SIDEFLEXING RADIUS R inch	WORKING LOAD (25°C/77°F) N	WORKING LOAD (25°C/77°F) lbs	WEIGHT kg/m	WEIGHT lbs/ft
ULTRA PERFORMANCE HOMOPOLYMER DELRIN® UP	CARBON STEEL S	THERMOPLASTIC TPE Hardness: 50 ShA	GU 1873T UP K 3 ¼	GU1873UPKD/000	18/0873	82,6	3.25	355,6	14	4500	1012	4,41	2.96
			GU 1873T UP K 4 ½	GU1873UPKG/000		114,3	4.50	355,6	14	4500	1012	5,35	3.59
	STAINLESS STEEL SS		GU 1873T UP SS K 3 ¼	GU1873UPSKD/000	18/SS873AB	82,6	3.25	355,6	14	3500	787	4,35	2.93
			GU 1873T UP SS K 4 ½	GU1873UPSKG/000		114,3	4.50	355,6	14	3500	787	5,29	3.56
SPECIAL DELRIN ® REINFORCED WITH KEVLAR ® DK2™	CARBON STEEL S	THERMOPLASTIC TPE Hardness: 50 ShA	GU 1873T D2K K 3 ¼	GU1873D2KKD/000	18/0873	82,6	3.25	355,6	14	4500	1012	4,41	2.96
			GU 1873T D2K K 4 ½	GU1873D2KKG/000		114,3	4.50	355,6	14	4500	1012	5,35	3.59
	STAINLESS STEEL SS		GU 1873T D2K SS K 3 ¼	GU1873D2KSKD/000	18/SS873AB	82,6	3.25	355,6	14	3500	787	4,35	2.93
			GU 1873T D2K SS K 4 ½	GU1873D2KSKG/000		114,3	4.50	355,6	14	3500	787	5,29	3.56

Standard packaging: Rolls of 3,048 m (10 feet)

Copyright Regina Catene Calibrate s.p.a. - 2020, All rights reserved

TAB PLASTIC FLIGHTS
¾ " PITCH ROLLER CHAIN
D-SHAPE RUBBER PAD
THICKNESS 4 mm (0.157")
HINGE 32,1 mm (1.264")

NEW

DUPONT® KEVLAR® INSIDE

POWERED BY BASE ROLLER CHAIN MADE BY REGINA IN ITALY

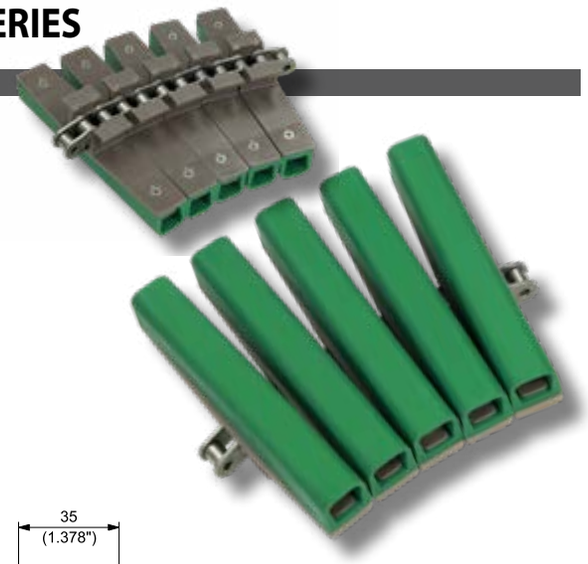

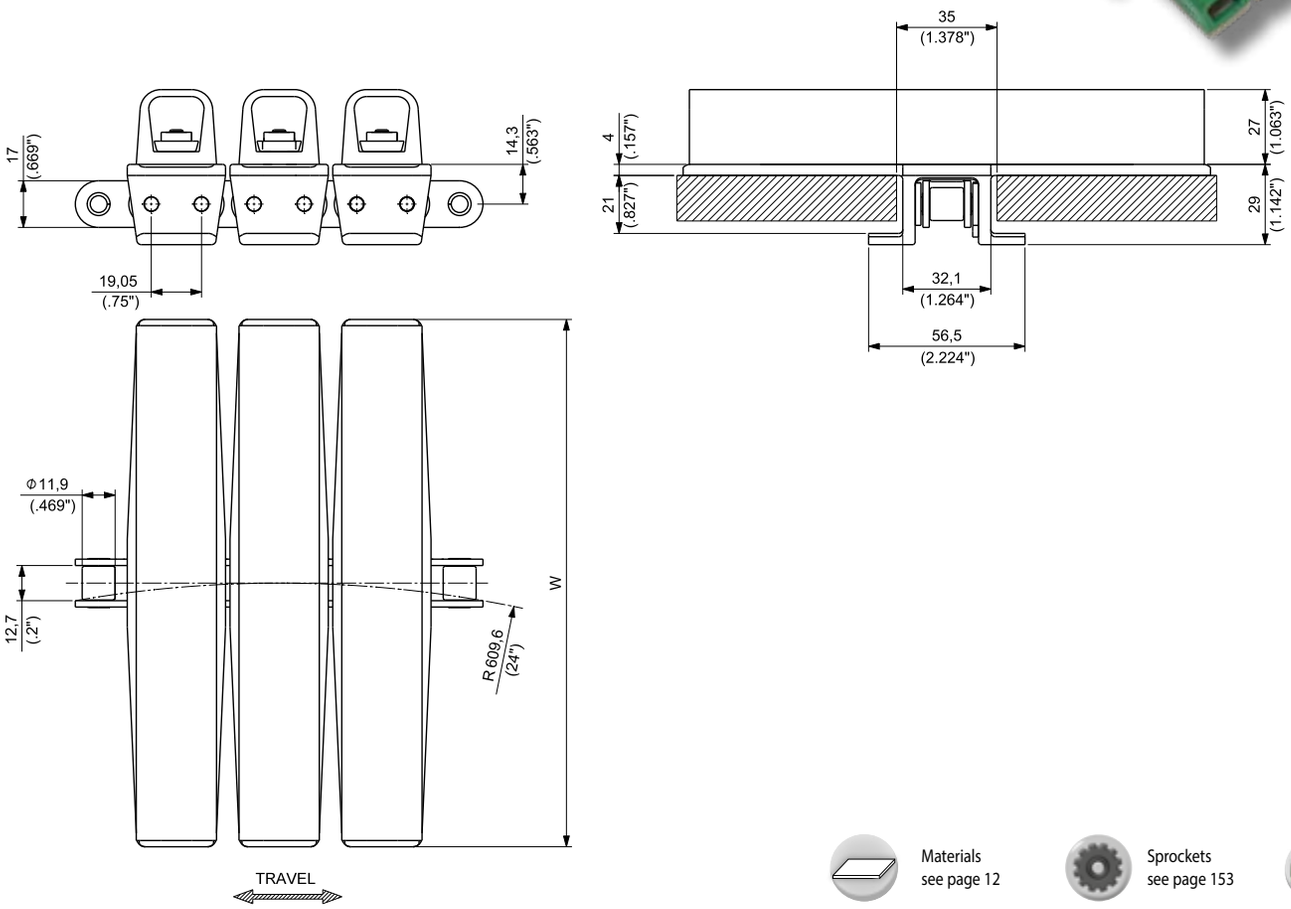

Materials see page 12
Sprockets see page 153
Applications see page 20

MATERIALS Flight	Base chain	Rubber	ITEM DESCRIPTION	PART NUMBER	CONNECTING LINK PART NUMBER	WIDTH W mm	inch	SIDEFLEXING RADIUS R mm	inch	WORKING LOAD (25°C/77°F) N	lbs	WEIGHT kg/m	lbs/ft
ULTRA PERFORMANCE HOMOPOLYMER DELRIN ® UP	STAINLESS STEEL SS	THERMOPLASTIC TPE Hardness: 50 ShA	GD 1873T UP SS K 7 ½	GD1873UPSKL/000	18/SS873AB	190,5	7.50	609,6	24	3500	787	4,90	3.29
		HEAT STABILIZED THERMOPLASTIC HS Hardness: 70 ShA	GD 1873T UP H SS K 7 ½	GD1873UPHSKL/000	18/SS873AB	190,5	7.50	609,6	24	3500	787	5,26	3.53
SPECIAL DELRIN ® REINFORCED WITH KEVLAR ® DK2™	STAINLESS STEEL SS	THERMOPLASTIC TPE Hardness: 50 ShA	GD 1873T D2K SS K 7 ½	GD1873D2KSKL/000	18/SS873AB	190,5	7.50	609,6	24	3500	787	4,90	3.29
		HEAT STABILIZED THERMOPLASTIC HS Hardness: 70 ShA	GD 1873T D2K H SS K 7 ½	GD1873D2KHSKL/000	18/SS873AB	190,5	7.50	609,6	24	3500	787	5,26	3.53

Standard packaging: Rolls of 3,048 m (10 feet)

Copyright Regina Catene Calibrate s.p.a. - 2020, All rights reserved

TAB PLASTIC FLIGHTS
¾ " PITCH ROLLER CHAIN
"HOUSE"-SHAPED RUBBER PAD
THICKNESS 4 mm (0.157")
HINGE 32,1 mm (1.264")

NEW

DUPONT® KEVLAR® INSIDE

POWERED BY BASE ROLLER CHAIN MADE BY REGINA IN ITALY

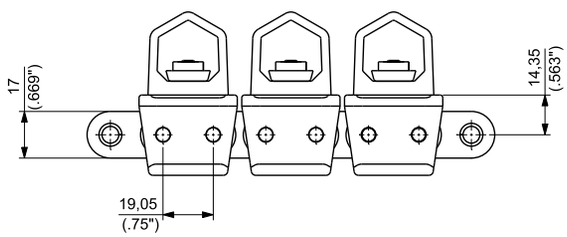

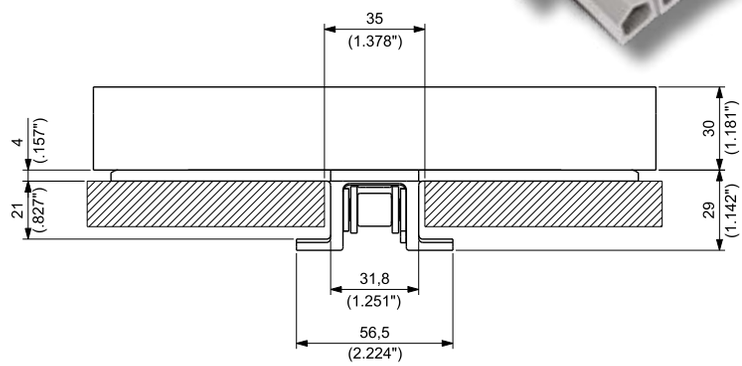

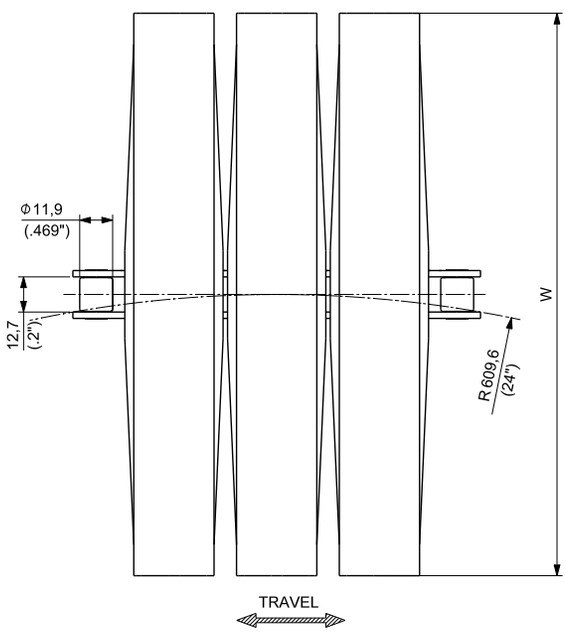

Materials see page 12
Sprockets see page 153
Applications see page 20

MATERIALS Flight	Base chain	Rubber	ITEM DESCRIPTION	PART NUMBER	CONNECTING LINK PART NUMBER	WIDTH W mm	inch	SIDEFLEXING RADIUS R mm	inch	WORKING LOAD (25°C/77°F) N	lbs	WEIGHT kg/m	lbs/ft
ULTRA PERFORMANCE HOMOPOLYMER DELRIN® UP	STAINLESS STEEL SS	THERMOPLASTIC TPE Hardness: 50 ShA	GC 1873T UP SS K 8	GC1873UPSKV/000	18/SS873AB	203,2	8	609,6	24	3500	787	4,90	3.29
		HEAT STABILIZED THERMOPLASTIC HS Hardness: 70 ShA	GC 1873T UP H SS K 8	GC1873UPHSKV/000	18/SS873AB	203,2	8	609,6	24	3500	787	5,26	3.53
SPECIAL DELRIN® REINFORCED WITH KEVLAR® DK2™	STAINLESS STEEL SS	THERMOPLASTIC TPE Hardness: 50 ShA	GC 1873T D2K SS K 8	GC1873D2KSKV/000	18/SS873AB	203,2	8	609,6	24	3500	787	4,90	3.29
		HEAT STABILIZED THERMOPLASTIC HS Hardness: 70 ShA	GC 1873T D2K H SS K 8	GC1873D2KHSKV/000	18/SS873AB	203,2	8	609,6	24	3500	787	5,26	3.53

Standard packaging: Rolls of 3,048 m (10 feet)

Copyright Regina Catene Calibrate s.p.a. - 2020, All rights reserved

TAB PLASTIC FLIGHTS
½ " PITCH ROLLER CHAIN
LONG FINGERS RUBBER PAD
THICKNESS 3,3 mm (0.130")
HINGE 19,85 mm (0.781")

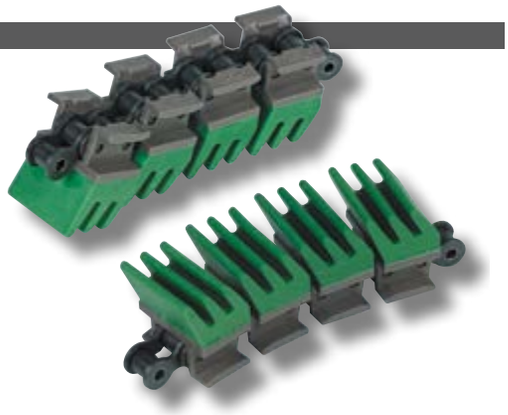

POWERED BY BASE ROLLER CHAIN MADE BY REGINA IN ITALY

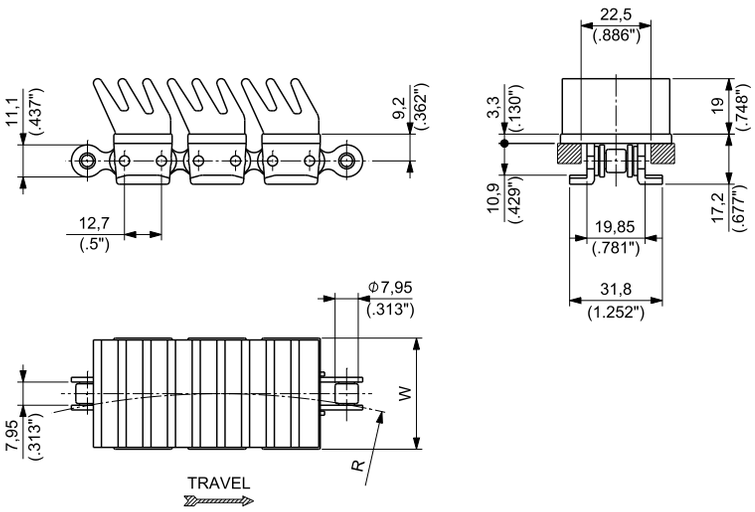

Materials see page 12
Sprockets see page 152
Corner tracks see page 322
Applications see page 20

Flight	MATERIALS Base chain	Rubber	ITEM DESCRIPTION	PART NUMBER	CONNECTING LINK PART NUMBER	WIDTH W mm	inch	SIDEFLEXING RADIUS R mm	inch	WORKING LOAD (25°C/77°F) N	lbs	WEIGHT kg/m	lbs/ft
ULTRA PERFORMANCE HOMOPOLYMER DELRIN® UP	CARBON STEEL S	THERMOPLASTIC TPE Hardness: 50 ShA	EW 1843T UP K 1 ½	EW1843UPKW/000	18/1843	38,1	1.5	254	10	2600	584	1,28	0.86
	STAINLESS STEEL SS		EW 1843T UP SS K 1 ½	EW1843UPSKW/000	18/SS1843	38,1	1.5	254	10	2000	450	1,29	0.87

Standard packaging: Rolls of 3,048 m (10 feet)

Copyright Regina Catene Calibrate s.p.a. - 2020, All rights reserved

TAB PLASTIC PLATES
SHORT FINGERS RUBBER PAD
REDUCED SIDEFLEXING RADIUS
THICKNESS 4,8 mm (0.189")
HINGE 42,9 mm (1.689")

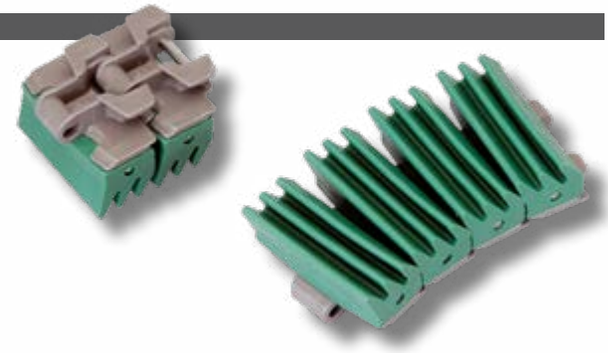

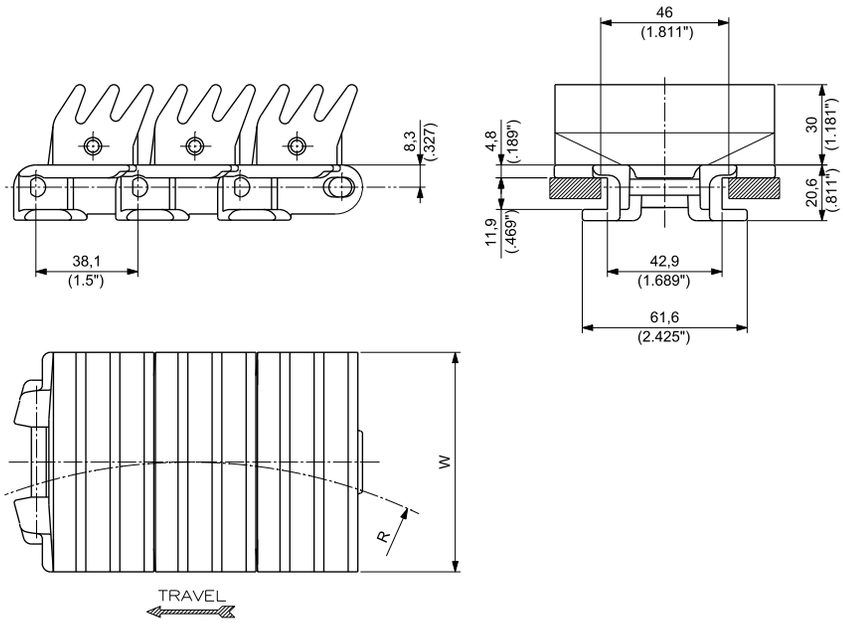

Materials see page 12
Sprockets see pages 146÷148
Applications see page 20

MATERIALS			ITEM DESCRIPTION	PART NUMBER	WIDTH W		SIDEFLEXING RADIUS R		WORKING LOAD (25°C/77°F)		WEIGHT	
Plate	Pin	Rubber			mm	inch	mm	inch	N	lbs	kg/m	lbs/ft
ULTRA PERFORMANCE HOMOPOLYMER DELRIN ® UP	AUSTENITIC STAINLESS STEEL	THERMOPLASTIC TPE Hardness: 50 ShA	GW 878T UP K 3 ¼	GW878UPKD/000	82,6	3.25	250	9.84	2000	450	3,38	2.27

Standard packaging: Rolls of 3,048 m (10 feet)

Copyright Regina Catene Calibrate s.p.a. - 2020, All rights reserved

TAB PLASTIC PLATES
LONG FINGERS RUBBER PAD
REDUCED SIDEFLEXING RADIUS
THICKNESS 4,8 mm (0.189")
HINGE 42,9 mm (1.689")

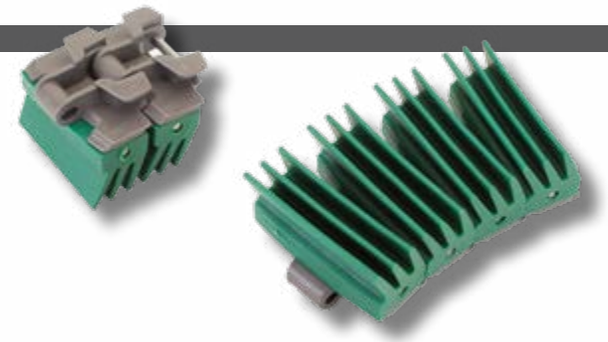

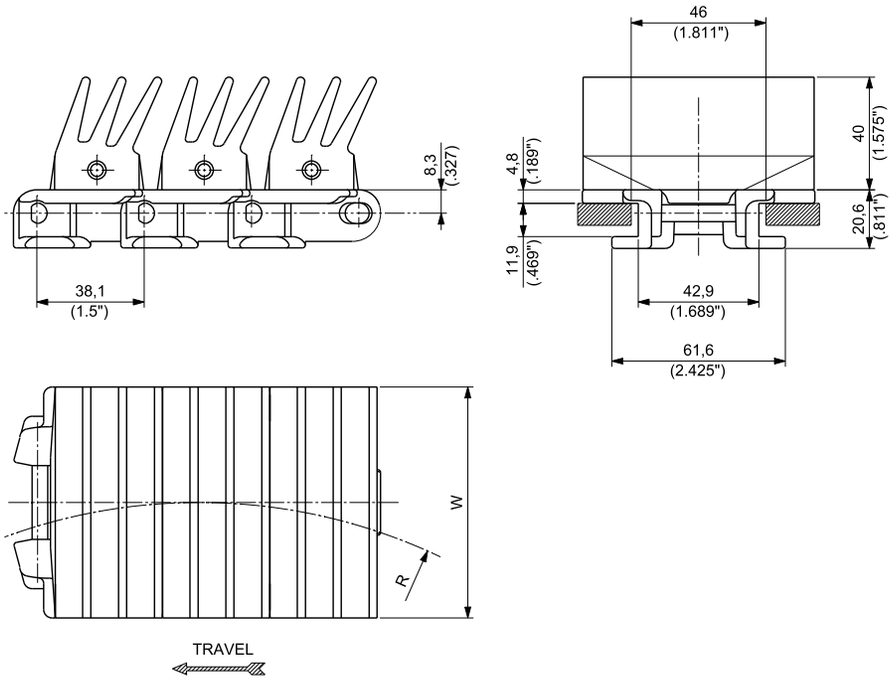

Materials see page 12
Sprockets see pages 146÷148
Applications see page 20

MATERIALS			ITEM DESCRIPTION	PART NUMBER	WIDTH W		SIDEFLEXING RADIUS R		WORKING LOAD (25°C/77°F)		WEIGHT	
Plate	Pin	Rubber			mm	inch	mm	inch	N	lbs	kg/m	lbs/ft
ULTRA PERFORMANCE HOMOPOLYMER DELRIN® UP	AUSTENITIC STAINLESS STEEL	THERMOPLASTIC TPE Hardness: 50 ShA	EW 878T UP K 3 ¼	EW878UPKD/000	82,6	3.25	250	9.84	2000	450	3,38	2.27

Standard packaging: Rolls of 3,048 m (10 feet)

Copyright Regina Catene Calibrate s.p.a. - 2020, All rights reserved

TAB PLASTIC PLATES
D-SHAPE RUBBER PAD
REDUCED SIDEFLEXING RADIUS
THICKNESS 4,8 mm (0.189")
HINGE 42,9 mm (1.689")

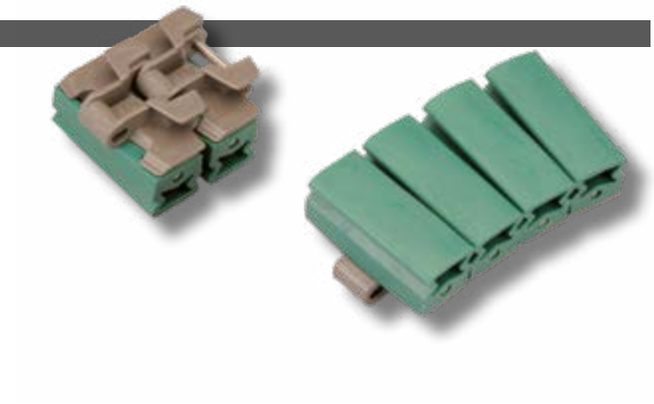

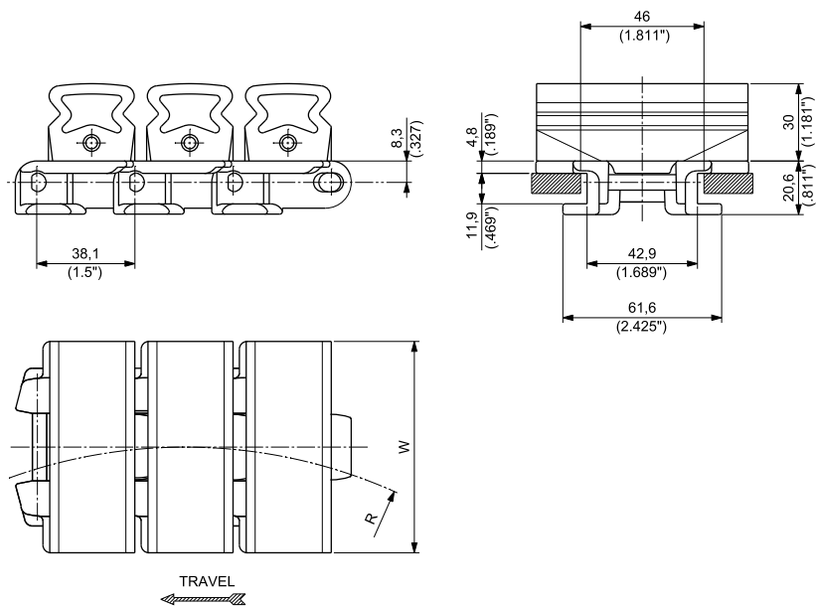

Materials see page 12
Sprockets see pages 146÷148
Applications see page 20

MATERIALS			ITEM DESCRIPTION	PART NUMBER	WIDTH W		SIDEFLEXING RADIUS R		WORKING LOAD (25°C/77°F)		WEIGHT	
Plate	Pin	Rubber			mm	inch	mm	inch	N	lbs	kg/m	lbs/ft
ULTRA PERFORMANCE HOMOPOLYMER DELRIN® UP	AUSTENITIC STAINLESS STEEL	THERMOPLASTIC TPE Hardness: 50 ShA	GD 878T UP K 3 ¼	GD878UPKD/000	82,6	3.25	250	9.84	2000	450	3,38	2.27

Standard packaging: Rolls of 3,048 m (10 feet)

Copyright Regina Catene Calibrate s.p.a. - 2020, All rights reserved

TAB PLASTIC PLATES
U-SHAPE RUBBER PAD
REDUCED SIDEFLEXING RADIUS
THICKNESS 4,8 mm (0.189")
HINGE 42,9 mm (1.689")

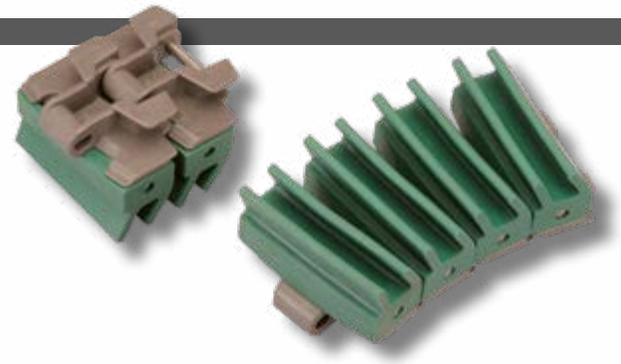

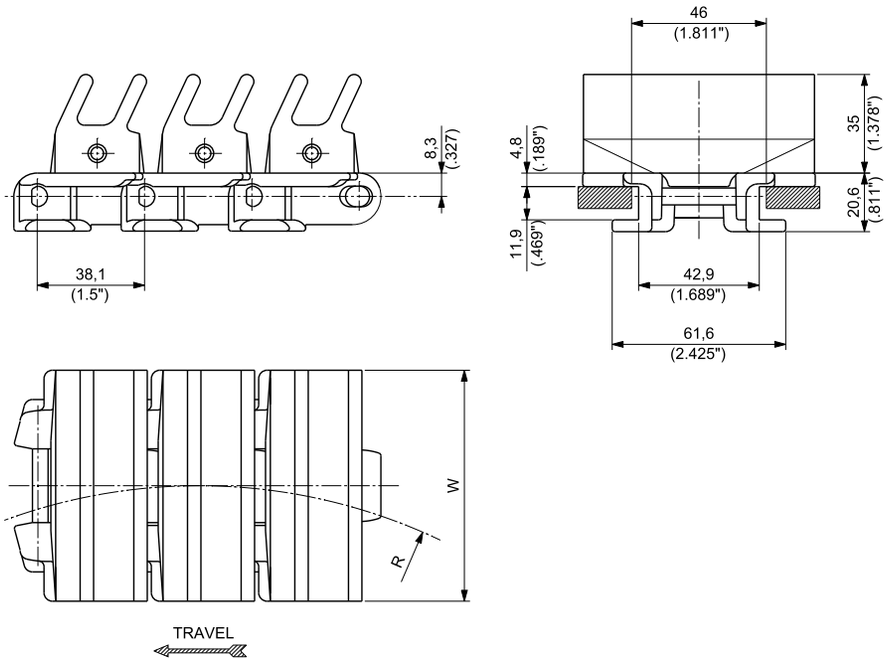

Materials see page 12
Sprockets see pages 146÷148
Applications see page 20

MATERIALS			ITEM DESCRIPTION	PART NUMBER	WIDTH W		SIDEFLEXING RADIUS R		WORKING LOAD (25°C/77°F)		WEIGHT	
Plate	Pin	Rubber			mm	inch	mm	inch	N	lbs	kg/m	lbs/ft
ULTRA PERFORMANCE HOMOPOLYMER DELRIN ® UP	AUSTENITIC STAINLESS STEEL	THERMOPLASTIC TPE Hardness: 50 ShA	GU 878T UP K 3 ¼	GU878UPKD/000	82,6	3.25	250	9.84	2000	450	3,38	2.27

Standard packaging: Rolls of 3,048 m (10 feet)

Copyright Regina Catene Calibrate s.p.a. - 2020, All rights reserved

PERFORMANCE IN MOTION

FliteTop®

LBP Chains
(Low Back-Line Pressure)

INDUSTRIES AND APPLICATIONS

LBP CHAINS

Suitable for handling packaged products like cartons, shrink packs, crates.

INDUSTRIES

Bottling and canning

Food filling

Warehouse & distribution

APPLICATIONS

Packaged product convey in accumulation sections

FEATURES

- High ratio in outside/inside roller diameter: better rotation capability and lower coefficient of friction with products are guaranteed.

- UP material rollers paired with premium surface finish of stainlees steel pins minimize friction preventing product damage caused by the accumuation force.

- On larger chain widths additional supports for pins keep a flat handling surface for the maximum product stability.

- Availability of modular transfer plates with rollers to guarantee a smooth product head transfer between two conveyors (see page 325).

Copyright Regina Catene Calibrate s.p.a. - 2020, All rights reserved

DOUBLE HINGE
PITCH 1 ½" (38,1 mm)
THICKNESS 4,8 mm (0.189")
HINGE 136,5 mm (5.374")

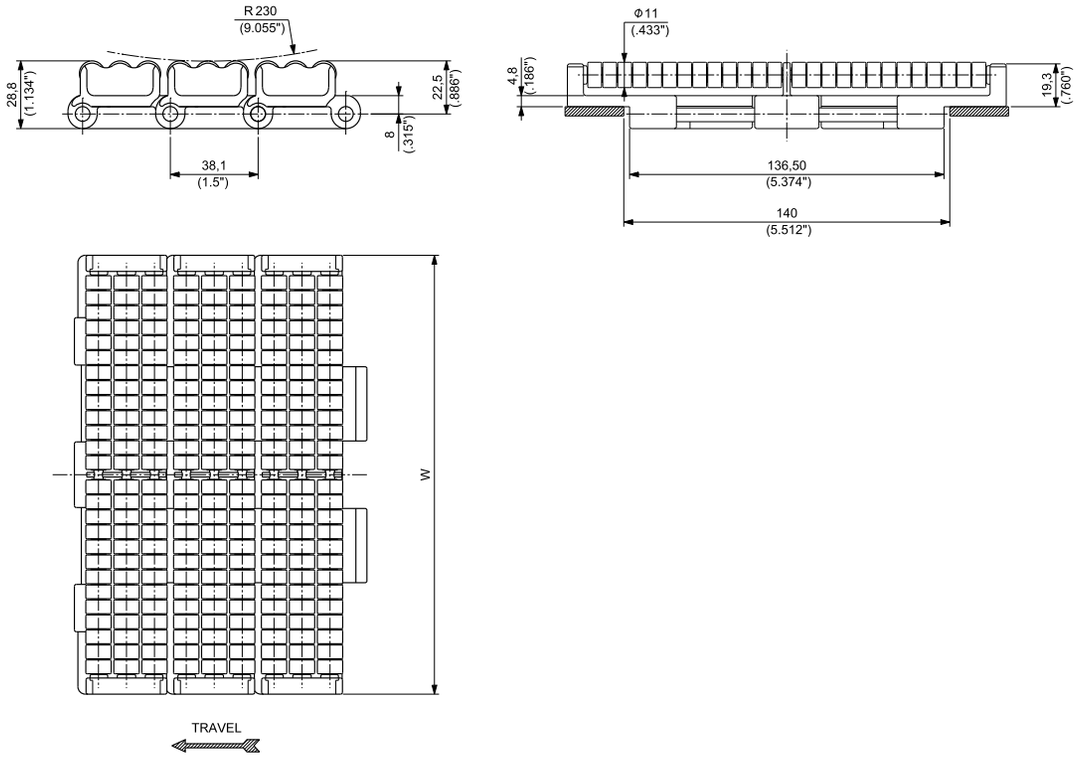

Materials see page 12
Sprockets see pages 144÷145
Applications see page 20

MATERIALS		ITEM DESCRIPTION	PART NUMBER	WIDTH W		PLATE THICKNESS		WORKING LOAD (25°C/77°F)		WEIGHT	
Plate	Pin			mm	inch	mm	inch	N	lbs	kg/m	lbs/ft
ULTRA PERFORMANCE HOMOPOLYMER DELRIN ® UP	AUSTENITIC STAINLESS STEEL	LBP 821 UP K 7 ½	LBP821UPKL/000	190,5	7.50	4,8	0.19	2750	618	5,63	3.78
		LBP 821 UP K 10	LBP821UPKM/000	254,0	10.00	4,8	0.19	2750	618	7,07	4.75
		LBP 821 UP K 12	LBP821UPKN/000	304,8	12.00	4,8	0.19	2750	618	8,22	5.53

Standard packaging:
Rolls of 1,524 m (5 feet)

Copyright Regina Catene Calibrate s.p.a. - 2020, All rights reserved

HEAVY DUTY SINGLE HINGE
PITCH 1 ½" (38,1 mm)
THICKNESS 4,8 mm (0.189")
HINGE 57 mm (2.244")

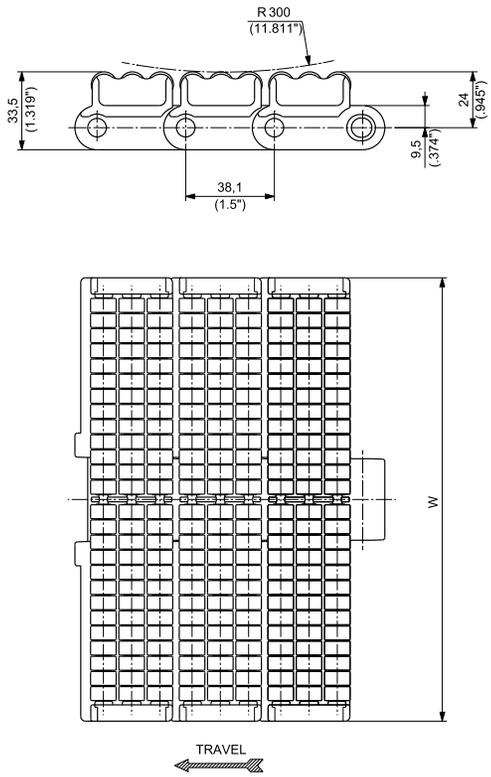

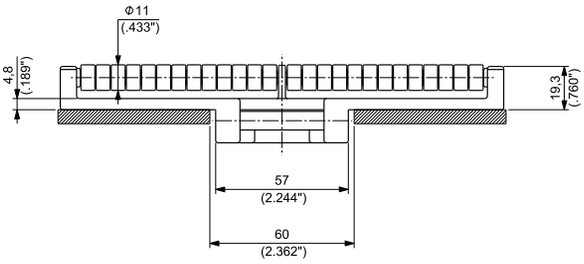

Materials see page 12
Sprockets see pages 149÷150
Applications see page 20

MATERIALS		ITEM DESCRIPTION	PART NUMBER	WIDTH W		PLATE THICKNESS		WORKING LOAD (25°C/77°F)		WEIGHT	
Plate	Pin			mm	inch	mm	inch	N	lbs	kg/m	lbs/ft
ULTRA PERFORMANCE HOMOPOLYMER DELRIN ® UP	AUSTENITIC STAINLESS STEEL	LBP 8257 UP K 7 ½	LBP8257UPKL/000	190,5	7.50	4,8	0.19	3910	879	5,47	3.68
		LBP 8257 UP K 10	LBP8257UPKM/000	254,0	10.00	4,8	0.19	3910	879	6,93	4.66
		LBP 8257 UP K 12	LBP8257UPKN/000	304,8	12.00	4,8	0.19	3910	879	8,09	5.44

Standard packaging:
Rolls of 1,524 m (5 feet)

Copyright Regina Catene Calibrate s.p.a. - 2020, All rights reserved

TAB
HEAVY DUTY SINGLE HINGE
PITCH 1 ½" (38,1 mm)
THICKNESS 4,8 mm (0.189")
HINGE 57 mm (2.244")

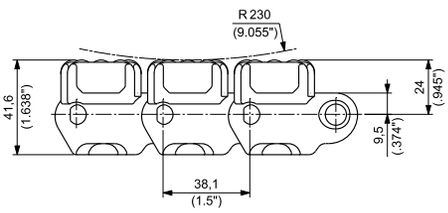

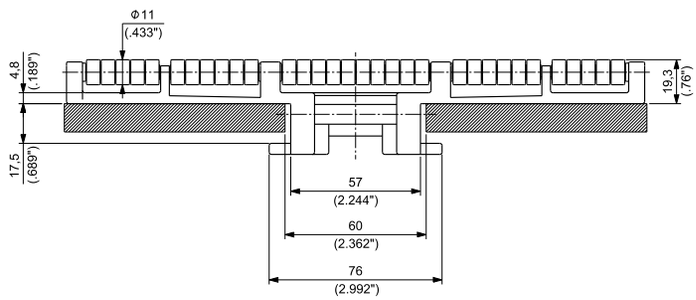

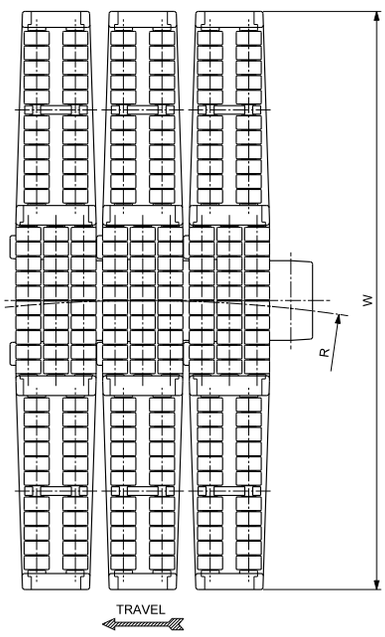

Materials see page 12
Sprockets see pages 149÷151
Corner tracks see page 321
Applications see page 20

MATERIALS Plate	MATERIALS Pin	ITEM DESCRIPTION	PART NUMBER	WIDTH W mm	WIDTH W inch	PLATE THICKNESS mm	PLATE THICKNESS inch	SIDEFLEXING RADIUS R mm	SIDEFLEXING RADIUS R inch	WORKING LOAD (25°C/77°F) N	WORKING LOAD (25°C/77°F) lbs	WEIGHT kg/m	WEIGHT lbs/ft
ULTRA PERFORMANCE HOMOPOLYMER DELRIN® UP	AUSTENITIC STAINLESS STEEL	LBP 882T UP K 3 ¾	LBP882TUPKEA/000	95,3	3.75	4,8	0.19	667,0	26.26	3910	879	3,51	2.36
		LBP 882T UP K 4 ½	LBP882TUPKG/000	114,3	4.50	4,8	0.19	609,6	24.00	3910	879	3,95	2.65
		LBP 882T UP K 7 ½	LBP882TUPKL/000	190,5	7.50	4,8	0.19	609,6	24.00	3910	879	5,10	3.43
		LBP 882T UP K 10	LBP882TUPKM/000	254,0	10.00	4,8	0.19	609,6	24.00	3910	879	6,38	4.29
		LBP 882T UP K 12	LBP882TUPKN/000	304,8	12.00	4,8	0.19	609,6	24.00	3910	879	6,95	4.67

Standard packaging:
Rolls of 1,524 m (5 feet)

Copyright Regina Catene Calibrate s.p.a. - 2020, All rights reserved

MAGNETIC
HEAVY DUTY SINGLE HINGE
PITCH 1 ½" (38,1 mm)
THICKNESS 4,8 mm (0.189")
HINGE 57 mm (2.244")

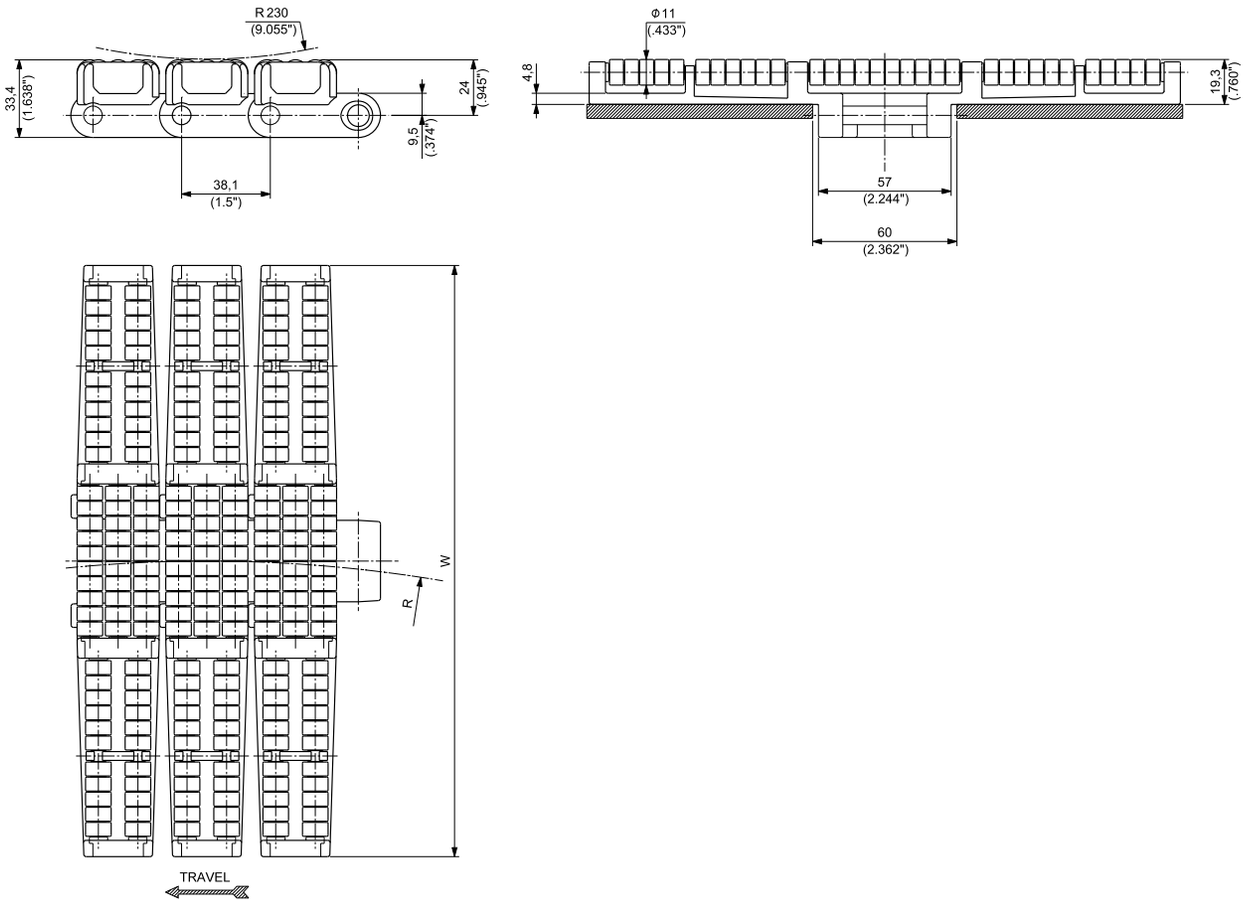

Materials see page 12
Sprockets see pages 149÷150
Corner tracks see page 280
Applications see page 20

MATERIALS Plate	MATERIALS Pin	ITEM DESCRIPTION	PART NUMBER	WIDTH W mm	WIDTH W inch	PLATE THICKNESS mm	PLATE THICKNESS inch	SIDEFLEXING RADIUS R mm	SIDEFLEXING RADIUS R inch	WORKING LOAD (25°C/77°F) N	WORKING LOAD (25°C/77°F) lbs	WEIGHT kg/m	WEIGHT lbs/ft
ULTRA PERFORMANCE HOMOPOLYMER DELRIN® UP	MAGNETIC STAINLESS STEEL	LBP 882M UP K 7 ½	LBP882MUPKL/000	190,5	7.50	4,8	0.19	609,6	24	3910	879	4,85	3.26
		LBP 882M UP K 10	LBP882MUPKM/000	254,0	10.00	4,8	0.19	609,6	24	3910	879	5,91	3.97
		LBP 882M UP K 12	LBP882MUPKN/000	304,8	12.00	4,8	0.19	609,6	24	3910	879	6,70	4.50

Standard packaging:
Rolls of 1,524 m (5 feet)

Copyright Regina Catene Calibrate s.p.a. - 2020, All rights reserved

REGINA CHAIN

PERFORMANCE IN MOTION

FliteTop®

Biplanar Chains

INCREASED PRODUCT SUPPORT SURFACE
PITCH 50 mm (1.969")
THICKNESS 4 mm (0.157")

DUPONT® KEVLAR® INSIDE

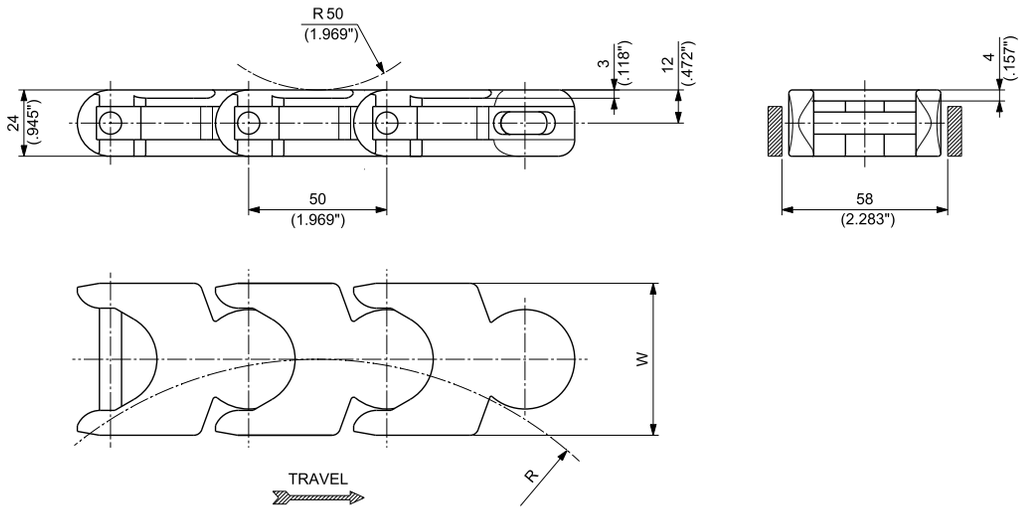

Materials see page 12 | Sprockets see pages 155÷156 | Turning disc see page 112 | Applications see page 20

MATERIALS Plate	MATERIALS Pin	ITEM DESCRIPTION	PART NUMBER	WIDTH W mm	WIDTH W inch	SIDEFLEXING RADIUS R mm	SIDEFLEXING RADIUS R inch	WORKING LOAD (25°C/77°F) N	WORKING LOAD (25°C/77°F) lbs	WEIGHT kg/m	WEIGHT lbs/ft
WHITE ACETAL RESIN WA	AUSTENITIC STAINLESS STEEL	C 1700	C1700/000	55	2.17	140	5.51	3000	674	1,34	0.90
ULTRA PERFORMANCE HOMOPOLYMER DELRIN ® UP	AUSTENITIC STAINLESS STEEL	A 1700	A1700/000	55	2.17	140	5.51	3300	742	1,33	0.89
SPECIAL DELRIN ® REINFORCED WITH KEVLAR ® DK2™	AUSTENITIC STAINLESS STEEL	D2K 1700A	D2K1700A/000	55	2.17	140	5.51	3000	674	1,33	0.89

Standard packaging: Rolls of 3,000 m (9.842 feet)

Copyright Regina Catene Calibrate s.p.a. - 2020, All rights reserved

TURNING DISC

Anti-friction turning discs for 1700 series combined with the special thermoplastic chain material allow longer chain runs and multiple turns in applications like:
line accumulation, routing to automatic or manual inspection points, elevation or lowering to automatic or manual inspection points and product distribution.

MATERIALS

DISCS: **PGF** REINFORCED POLYAMIDE

CLOSED VERSION: PART NUMBER **CMT091700A00**

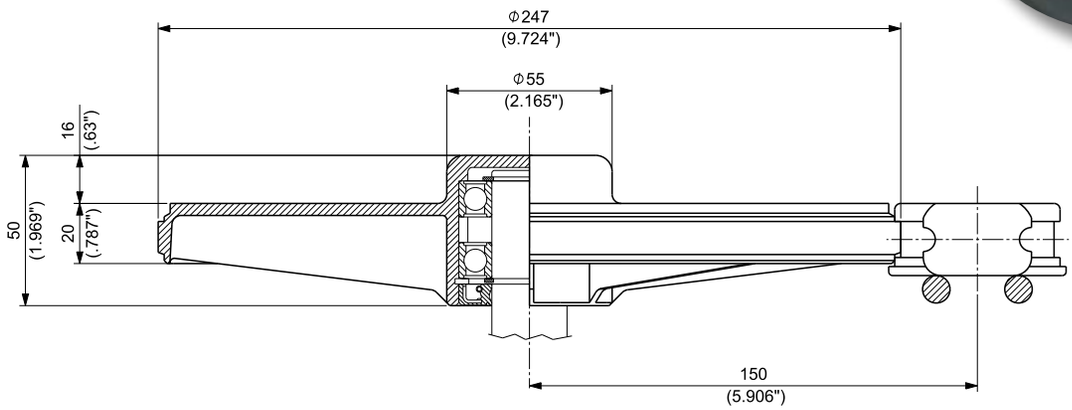

OPEN VERSION: PART NUMBER **CMT091700C00**

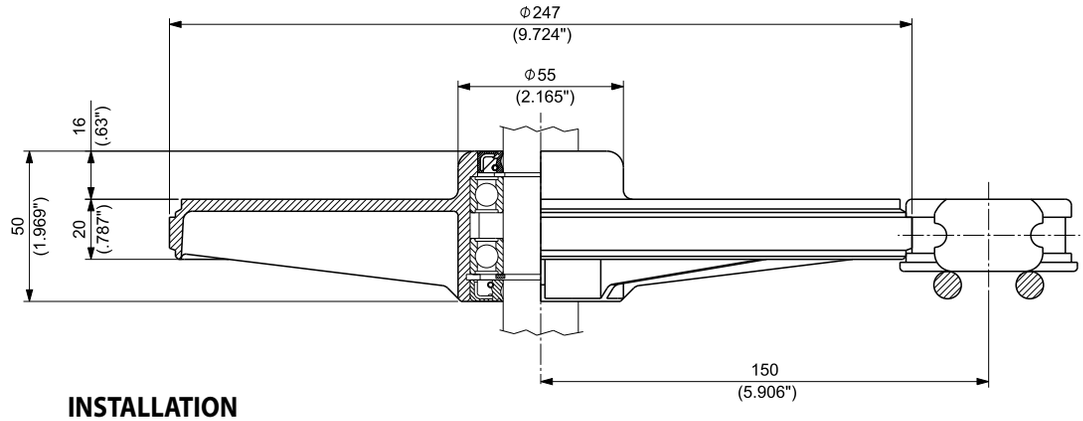

INSTALLATION

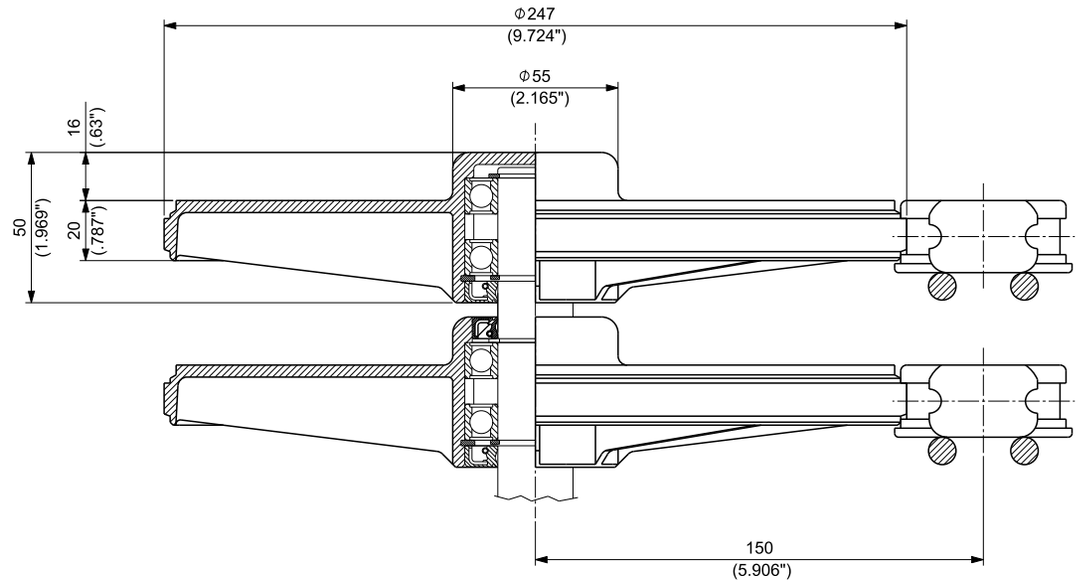

UPPER PART

RETURN PART

Copyright Regina Catene Calibrate s.p.a. - 2020, All rights reserved

TURNING DISC

SHAFT AND TURNING DISC DIMENSIONS:

CLOSED VERSION

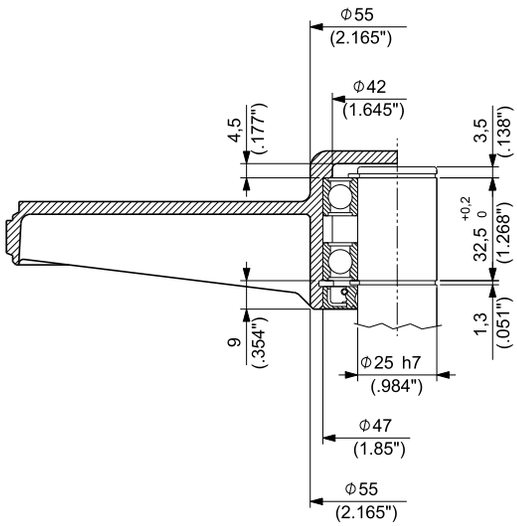

COMPONENTS:

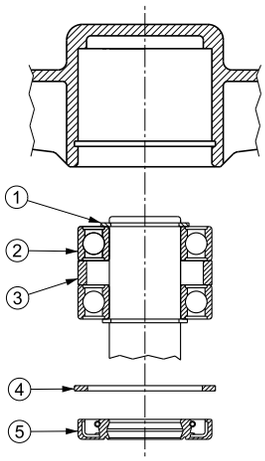

OPEN VERSION

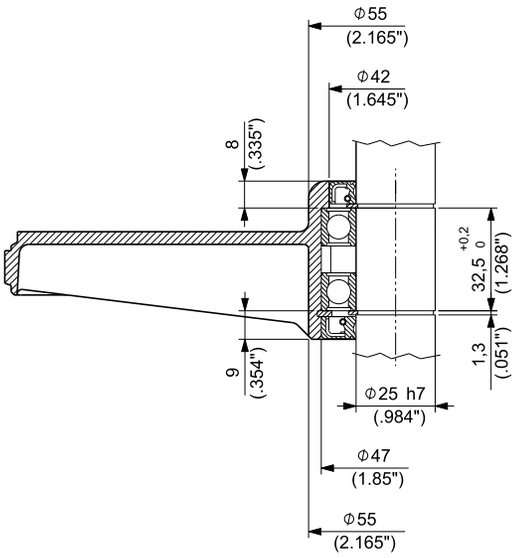

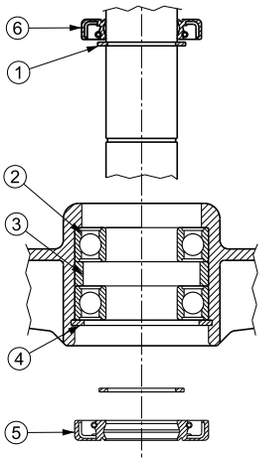

Turning discs are supplied with the following separated components:

1 - External retaining ring, Ø 25 UNI 7435-25;

2 - Single race radial bearing with two sliding seals, 6005-2RS1 (25x47x12);

3 - Bearing spacer;

4 - Internal retaining ring, Ø 47 UNI 7437-47;

5 - Seal ring with dust cover, DPSM 25477 DIN 3760 (25x47x7);

6 - Seal ring with dust cover, DPSM 25477 DIN 3760 (25x47x7), only for open version (CMT091700C00).

Copyright Regina Catene Calibrate s.p.a. - 2020, All rights reserved

PITCH 50 mm (1.969")
THICKNESS 5,0 mm (0.197")

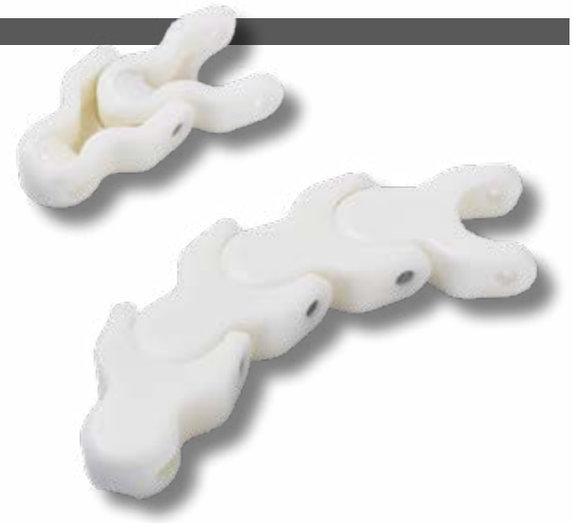

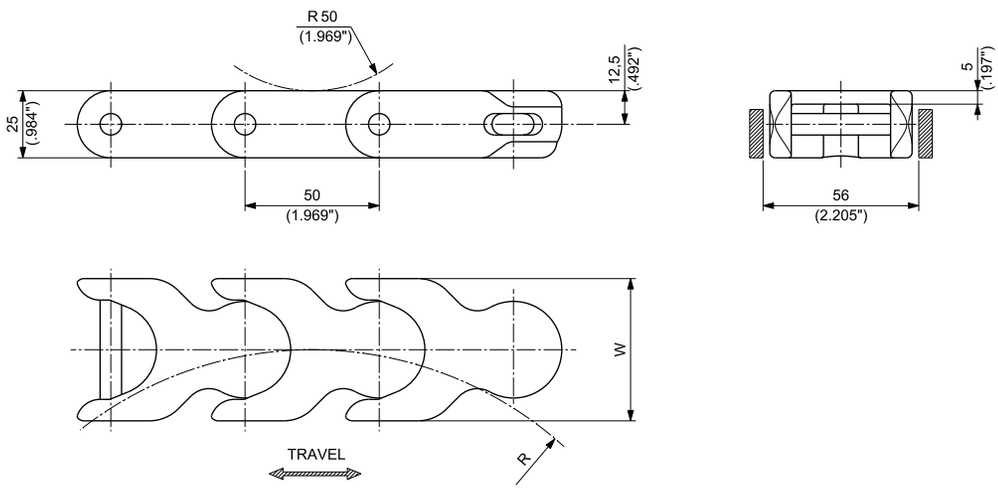

Materials see page 12
Sprockets see pages 155÷156
Applications see page 20

MATERIALS		ITEM DESCRIPTION	PART NUMBER	WIDTH W		SIDEFLEXING RADIUS R		WORKING LOAD (25°C/77°F)		WEIGHT	
Plate	Pin			mm	inch	mm	inch	N	lbs	kg/m	lbs/ft
WHITE ACETAL RESIN WA	AUSTENITIC STAINLESS STEEL	1702A	1702A/000	53	2.09	140	5.51	3300	742	1,44	0.97

Standard packaging: Rolls of 3,000 m (9.842 feet)

Copyright Regina Catene Calibrate s.p.a. - 2020, All rights reserved

TAB
PITCH 50 mm (1.969")
THICKNESS 5,0 mm (0.197")

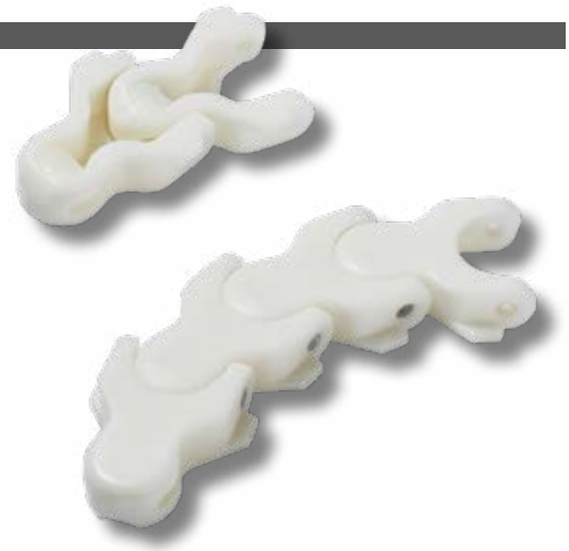

DUPONT® KEVLAR® INSIDE

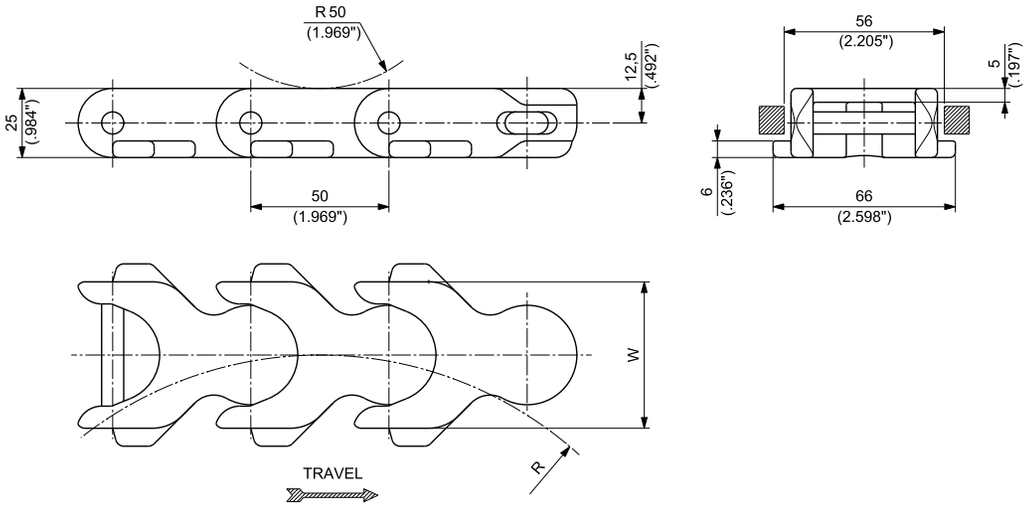

Materials see page 12
Sprockets see pages 155÷156
Corner tracks see page 322
Applications see page 20

MATERIALS Plate	MATERIALS Pin	ITEM DESCRIPTION	PART NUMBER	WIDTH W mm	WIDTH W inch	SIDEFLEXING RADIUS R mm	SIDEFLEXING RADIUS R inch	WORKING LOAD (25°C/77°F) N	WORKING LOAD (25°C/77°F)	WEIGHT kg/m	WEIGHT lbs/ft
WHITE ACETAL RESIN WA	AUSTENITIC STAINLESS STEEL	1701TA	1701TA/000	53	2.09	140	5.51	3300	647	1,48	0.99
ULTRA PERFORMANCE HOMOPOLYMER DELRIN® UP	AUSTENITIC STAINLESS STEEL	UP 1701TA	UP1701TA/000	53	2.09	140	5.51	3000	647	1,42	0.95
SPECIAL DELRIN ® REINFORCED WITH KEVLAR ® DK2™	AUSTENITIC STAINLESS STEEL	D2K 1701TA	D2K1701TA/000	53	2.09	140	5.51	3000	647	1,40	0.94

Standard packaging: Rolls of 3,000 m (9.842 feet)

Copyright Regina Catene Calibrate s.p.a. - 2020, All rights reserved

1702 AND 1701T SERIES WITH PUSHERS

REGINA can supply, on request, loose flights with holes plus pins and pushers which the customer can assemble on the standard biplanar chains type 1702 and 1701T.

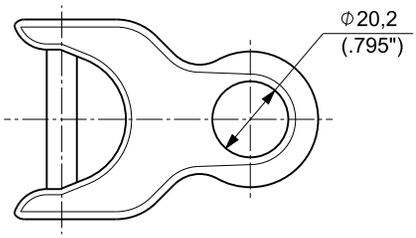

PART NUMBER: **136/1702**

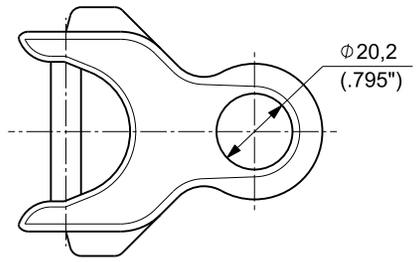

PART NUMBER: **136/1701T**

Two types of pushers are available:

TYPE "S" PUSHERS
With possibility of product accumulation.
This type of pusher has a rounded shape which allows some products accumulation.

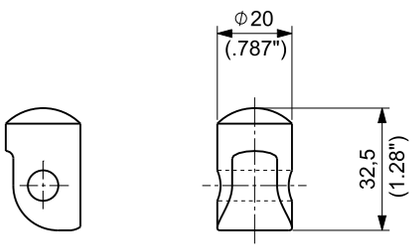

PART NUMBER: **232/1700**

TYPE "L" PUSHERS
With no possibility of product accumulation.
This type of pusher has an height that prevents any products accumulation.

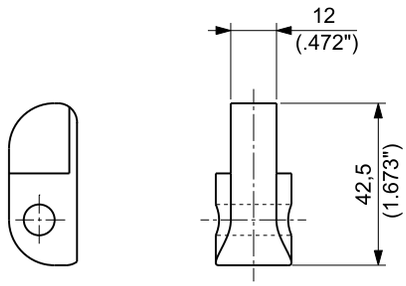

PART NUMBER: **233/1700**

Example of 1702 chain with pushers:

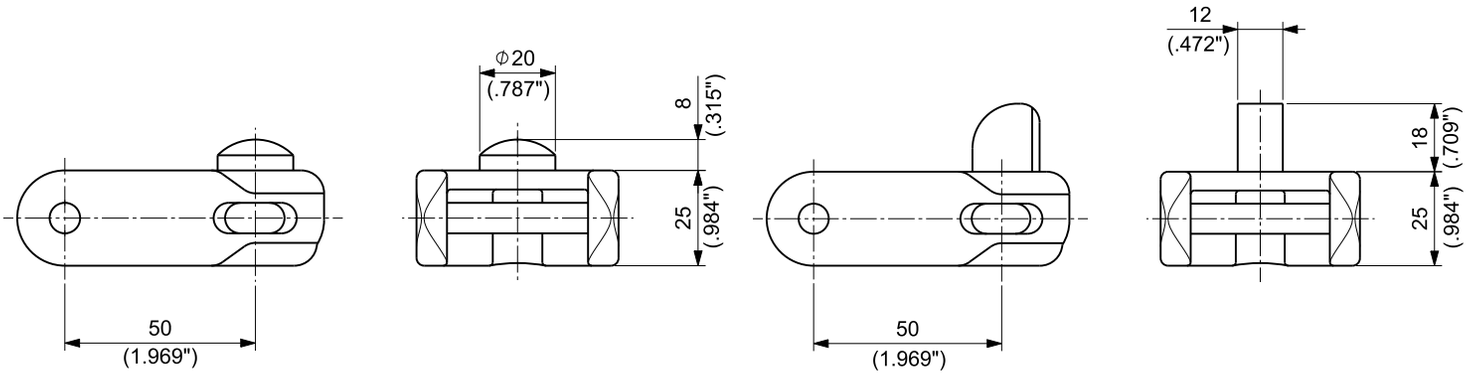

Copyright Regina Catene Calibrate s.p.a. - 2020, All rights reserved

REGINA CHAIN

PERFORMANCE IN MOTION

FliteTop®

Sprockets for Chains

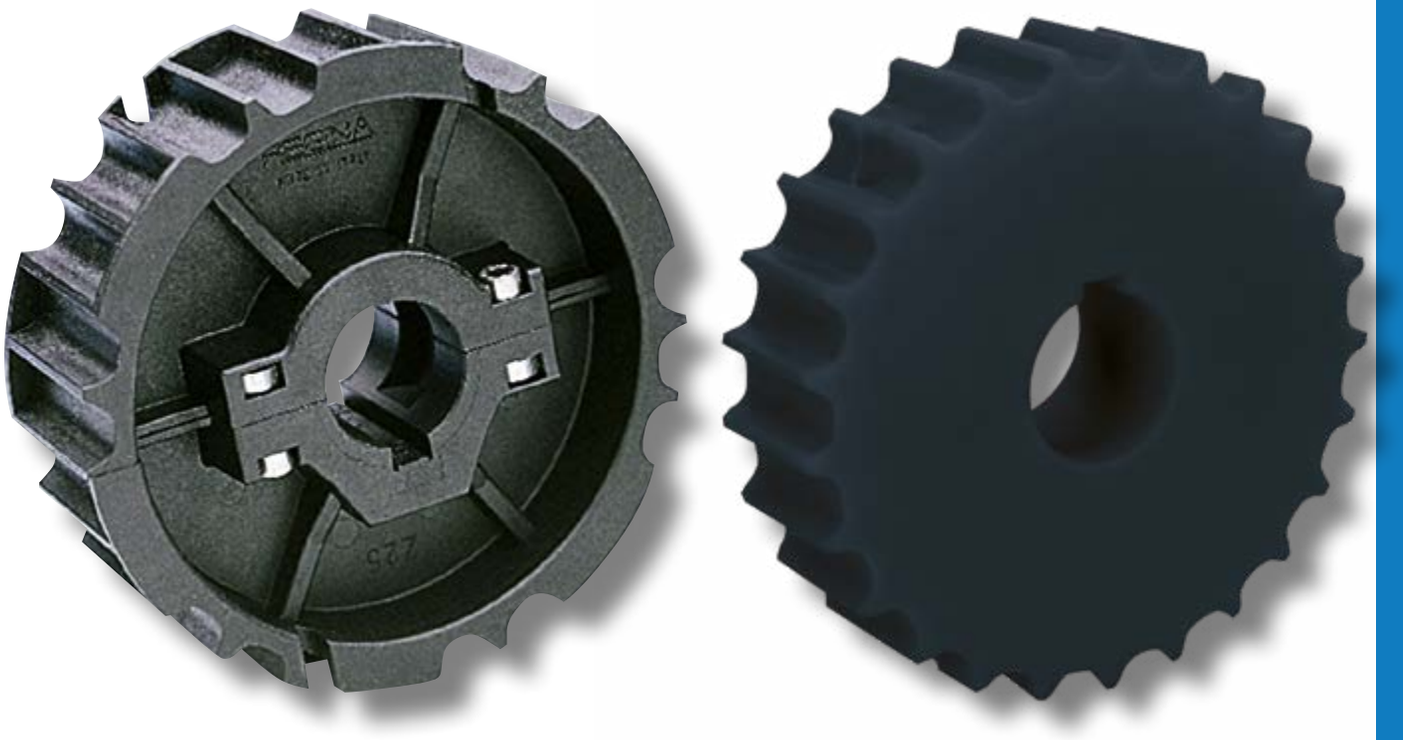

FliteTop®

SPROCKETS SERIES INDEX		
815 series	PAGES	119÷122
250 series	PAGES	123÷126
2815 series	PAGES	127÷130
9157 series	PAGES	131÷132
803 series	PAGE	133
881 series	PAGES	134÷139
820 series	PAGES	140÷143
821 series	PAGES	144÷145
880 series	PAGES	146÷148
882 series	PAGES	149÷151
A40 series	PAGE	152
A60 series	PAGE	153
A80 series	PAGE	154
1700 series	PAGES	155÷156

CHAIN SERIES INDEX	SPROCKETS	
915, PHD 915, PHDG 915, 981M, PHD 981M, PHDG 981M series	PAGE	119
2815, PHDG 2815 series	PAGE	127
PHD 9157, PHDG 9157, PHD 9857M, PHDG 9857M series	PAGE	131
803 series	PAGE	133
881, 881T, 981, 981T, 982T, PHDG 981T series	PAGE	134
820, 831, HFX 820 series	PAGE	140
821, HFX 821, LBP 821 series	PAGE	144
828, 880, 879, 880T, 879T, 880M RG, 878T, 880TA, HFX 880T, EW 878T, GW 878T, GD 878T, GU 878T series	PAGE	146
8257, 882, 882T, 882M, HFX 8257, HFX 882T, HFX 882M, LBP 8257, LBP 882T, LBP 882M series	PAGE	149
843, 845, RR 845, HF RR 845, 1843T, EW 1843T series	PAGE	152
1864, 1874T, 863, 1863T, 1873T, HFX 1873T, GV 1874, EV 1874T, GW 1873T, EW 1873T, GD 1873T, GU 1873T, GC 1873T series	PAGE	153
1883, HFX 1883 series	PAGE	154
1700, 1702, 1701T series	PAGE	155

Copyright Regina Catene Calibrate s.p.a. - 2020, All rights reserved

SUITABLE FOR CHAINS:

- **915 / PHD 915**
- **PHDG 915**
- **981M / PHD 981M**
- **PHDG 981M**

MATERIALS		
SPROCKETS:	PGF	REINFORCED POLYAMIDE
SCREWS:	SS	STAINLESS STEEL
NUTS:	B+NC	NICKEL PLATED BRASS

19T & 21T SPROCKETS

(for 23T & 25T see next page)

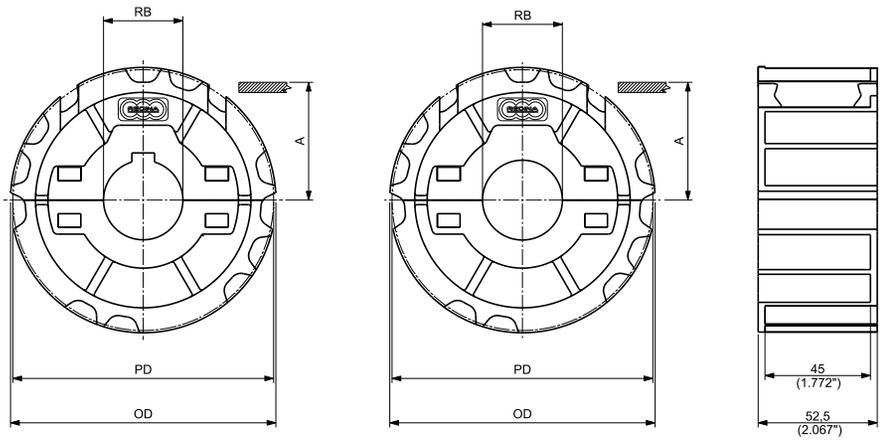

ROUND BORE - DRIVE

ROUND BORE - IDLER

MOULDED SPLIT DRIVE AND IDLER SPROCKETS

N. TEETH	PITCH DIAMETER PD		OUTSIDE DIAMETER OD		WEAR STRIP POSITIONING A		BORE SIZE*		PART NUMBER ROUND BORE RB		WEIGHT	
	mm	inch	mm	inch	mm	inch	mm	inch**	DRIVE	IDLER	Kg	lbs
NEW 19	117,34	4.620	117,00	4.606	62,07	2.444	25		**CMT028151901**	**CMT038151901**	0,40	0.88
							30		**CMT028151902**	**CMT038151902**	0,39	0.86
							35		**CMT028151903**	**CMT038151903**	0,38	0.84
							40		**CMT028151904**	**CMT038151904**	0,37	0.82
							45		**CMT028151905**	**CMT038151905**	0,36	0.79
								1	**CMT028151906**	**CMT038151906**	0,40	0.88
								1 ¼	**CMT028151908**	**CMT038151908**	0,39	0.86
								1 ⅜	**CMT028151911**	**CMT038151911**	0,39	0.86
								1 7/16	**CMT028151909**	**CMT038151909**	0,38	0.84
								1 ½	**CMT028151910**	**CMT038151910**	0,37	0.82
21	129,30	5.091	130,00	5.118	68,05	2.679	25		**CMT028152101**	**CMT038152101**	0,52	1.15
							30		**CMT028152102**	**CMT038152102**	0,51	1.12
							35		**CMT028152103**	**CMT038152103**	0,50	1.10
							40		**CMT028152104**	**CMT038152104**	0,48	1.06
							45		**CMT028152105**	**CMT038152105**	0,47	1.04
								1	**CMT028152106**	**CMT038152106**	0,52	1.15
								1 ¼	**CMT028152108**	**CMT038152108**	0,51	1.12
								1 ⅜	**CMT028152111**	**CMT038152111**	0,50	1.10
								1 7/16	**CMT028152109**	**CMT038152109**	0,49	1.08
								1 ½	**CMT028152110**	**CMT038152110**	0,49	1.08

*Diameter is indicated.

** Imperial round bore drive sprockets are supplied with setscrew. Metric round bore drive sprockets are supplied without setscrew.

Copyright Regina Catene Calibrate s.p.a. - 2020, All rights reserved

SUITABLE FOR CHAINS:

- **915 / PHD 915**
- **PHDG 915**
- **981M / PHD 981M**
- **PHDG 981M**

MATERIALS		
SPROCKETS:	PGF	REINFORCED POLYAMIDE
SCREWS:	SS	STAINLESS STEEL
NUTS:	B+NC	NICKEL PLATED BRASS

23T & 25T SPROCKETS

(for 19T & 21T see previous page)

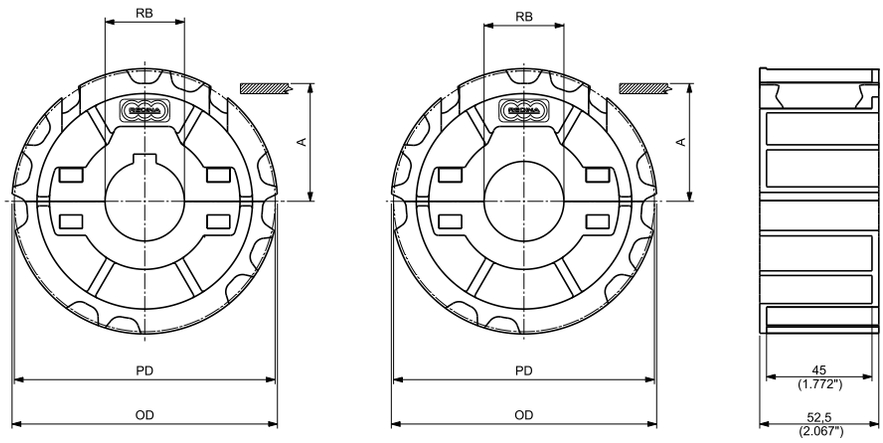

MOULDED SPLIT DRIVE AND IDLER SPROCKETS

N. TEETH	PITCH DIAMETER PD		OUTSIDE DIAMETER OD		WEAR STRIP POSITIONING A		BORE SIZE*		PART NUMBER ROUND BORE RB		WEIGHT	
	mm	inch	mm	inch	mm	inch	mm	inch**	DRIVE	IDLER	Kg	lbs
23	141,20	5.559	141,90	5.587	74,00	2.913	25		**CMT028152301**	**CMT038152301**	0,57	1.26
							30		**CMT028152302**	**CMT038152302**	0,56	1.23
							35		**CMT028152303**	**CMT038152303**	0,55	1.21
							40		**CMT028152304**	**CMT038152304**	0,53	1.17
							45		**CMT028152305**	**CMT038152305**	0,52	1.15
								1	CMT028152306	CMT038152306	0,57	1.26
								1 ¼	CMT028152308	CMT038152308	0,56	1.23
								1 ⅜	CMT028152311	CMT038152311	0,55	1.21
								1 7/16	CMT028152309	CMT038152309	0,54	1.19
								1 ½	CMT028152310	CMT038152310	0,54	1.19
25	153,19	6.031	154,20	6.071	80,00	3.150	25		**CMT028152501**	**CMT038152501**	0,62	1.37
							30		**CMT028152502**	**CMT038152502**	0,61	1.34
							35		**CMT028152503**	**CMT038152503**	0,60	1.32
							40		**CMT028152504**	**CMT038152504**	0,59	1.30
							45		**CMT028152505**	**CMT038152505**	0,57	1.26
								1	CMT028152506	CMT038152506	0,62	1.37
								1 ¼	CMT028152508	CMT038152508	0,61	1.34
								1 ⅜	CMT028152511	CMT038152511	0,60	1.32
								1 7/16	CMT028152509	CMT038152509	0,60	1.32
								1 ½	CMT028152510	CMT038152510	0,59	1.30

*Diameter is indicated.
** Imperial round bore drive sprockets are supplied with setscrew. Metric round bore drive sprockets are supplied without setscrew.

Copyright Regina Catene Calibrate s.p.a. - 2020, All rights reserved

SUITABLE FOR CHAINS:
- **915 / PHD 915**
- **PHDG 915**
- **981M / PHD 981M**
- **PHDG 981M**

MATERIALS		
SPROCKETS:	PA	POLYAMIDE
SCREWS:	SS	STAINLESS STEEL
NUTS:	B	BRASS

17T, 19T & 21T SPROCKETS
(for 23T, 25T & 27T see next page)

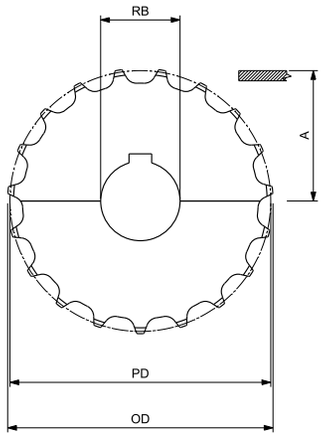

ROUND BORE - DRIVE

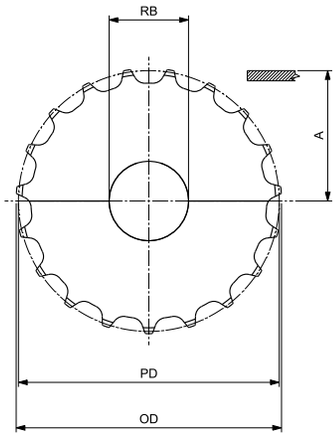

ROUND BORE - IDLER

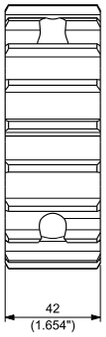

MACHINED SPLIT DRIVE AND IDLER SPROCKETS

N. TEETH	PITCH DIAMETER PD		OUTSIDE DIAMETER OD		WEAR STRIP POSITIONING A		BORE SIZE*		PART NUMBER ROUND BORE RB		WEIGHT	
	mm	inch	mm	inch	mm	inch	mm	inch**	DRIVE	IDLER	Kg	lbs
17	105,47	4.152	104,40	4.110	56,34	2.218	25		**CMAS028151725**	**CMAS038151725**	0,36	0.80
							30		**CMAS028151730**	**CMAS038151730**	0,35	0.78
							35		**CMAS028151735**	**CMAS038151735**	0,34	0.75
							40		**CMAS028151740**	**CMAS038151740**	0,33	0.72
								1	**CMAS0281517254**	**CMAS0381517254**	0,36	0.80
								1 ¼	**CMAS0281517317**	**CMAS0381517317**	0,35	0.78
								1 ⅜	**CMAS0281517349**	**CMAS0381517349**	0,35	0.78
								1 7/16	**CMAS0281517365**	**CMAS0381517365**	0,34	0.75
								1 ½	**CMAS0281517381**	**CMAS0381517381**	0,33	0.73
19	117,34	4.620	117,00	4.606	62,27	2.452	25		**CMAS028151925**	**CMAS038151925**	0,45	1.00
							30		**CMAS028151930**	**CMAS038151930**	0,44	0.97
							35		**CMAS028151935**	**CMAS038151935**	0,43	0.95
							40		**CMAS028151940**	**CMAS038151940**	0,42	0.92
								1	**CMAS0281519254**	**CMAS0381519254**	0,45	1.00
								1 ¼	**CMAS0281519317**	**CMAS0381519317**	0,45	1.00
								1 ⅜	**CMAS0281519349**	**CMAS0381519349**	0,44	0.97
								1 7/16	**CMAS0281519365**	**CMAS0381519365**	0,43	0.94
								1 ½	**CMAS0281519381**	**CMAS0381519381**	0,42	0.92
21	129,26	5.089	129,40	5.094	68,23	2.686	25		**CMAS028152125**	**CMAS038152125**	0,54	1.20
							30		**CMAS028152130**	**CMAS038152130**	0,57	1.26
							35		**CMAS028152135**	**CMAS038152135**	0,53	1.17
							40		**CMAS028152140**	**CMAS038152140**	0,52	1.14
								1	**CMAS0281521254**	**CMAS0381521254**	0,55	1.22
								1 ¼	**CMAS0281521317**	**CMAS0381521317**	0,55	1.22
								1 ⅜	**CMAS0281521349**	**CMAS0381521349**	0,54	1.20
								1 7/16	**CMAS0281521365**	**CMAS0381521365**	0,53	1.17
								1 ½	**CMAS0281521381**	**CMAS0381521381**	0,52	1.15

*Diameter is indicated.
** Imperial round bore drive sprockets are supplied with setscrew. Metric round bore drive sprockets are supplied without setscrew.

Copyright Regina Catene Calibrate s.p.a. - 2020, All rights reserved

SUITABLE FOR CHAINS:

- **915 / PHD 915**
- **PHDG 915**
- **981M / PHD 981M**
- **PHDG 981M**

MATERIALS		
SPROCKETS:	PA	POLYAMIDE
SCREWS:	SS	STAINLESS STEEL
NUTS:	B	BRASS

23T, 25T & 27T SPROCKETS

(for 17T, 19T & 21T see previous page)

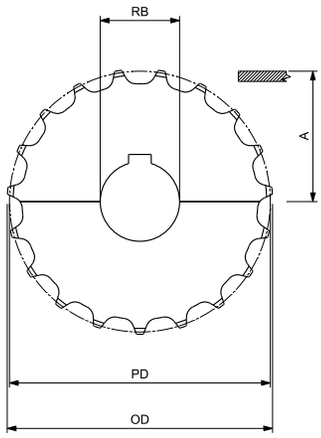

ROUND BORE - DRIVE

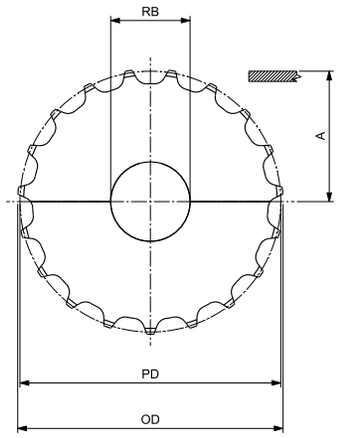

ROUND BORE - IDLER

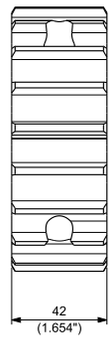

MACHINED SPLIT DRIVE AND IDLER SPROCKETS

N. TEETH	PITCH DIAMETER PD		OUTSIDE DIAMETER OD		WEAR STRIP POSITIONING A		BORE SIZE*		PART NUMBER ROUND BORE RB		WEIGHT	
	mm	inch	mm	inch	mm	inch	mm	inch**	DRIVE	IDLER	Kg	lbs
23	141,22	5.560	141,90	5.587	74,21	2.922	25		**CMAS028152325**	**CMAS038152325**	0,66	1.46
							30		**CMAS028152330**	**CMAS038152330**	0,65	1.44
							35		**CMAS028152335**	**CMAS038152335**	0,64	1.41
							40		**CMAS028152340**	**CMAS038152340**	0,63	1.38
								1	**CMAS0281523254**	**CMAS0381523254**	0,66	1.46
								1 ¼	**CMAS0281523317**	**CMAS0381523317**	0,66	1.46
								1 ⅜	**CMAS0281523349**	**CMAS0381523349**	0,65	1.44
								1 7/16	**CMAS0281523365**	**CMAS0381523365**	0,64	1.41
								1 ½	**CMAS0281523381**	**CMAS0381523381**	0,63	1.39
25	153,20	6.031	154,20	6.071	80,20	3.157	25		**CMAS028152525**	**CMAS038152525**	0,82	1.80
							30		**CMAS028152530**	**CMAS038152530**	0,81	1.77
							35		**CMAS028152535**	**CMAS038152535**	0,79	1.75
							40		**CMAS028152540**	**CMAS038152540**	0,78	1.71
								1	**CMAS0281525254**	**CMAS0381525254**	0,82	1.80
								1 ¼	**CMAS0281525317**	**CMAS0381525317**	0,82	1.80
								1 ⅜	**CMAS0281525349**	**CMAS0381525349**	0,81	1.77
								1 7/16	**CMAS0281525365**	**CMAS0381525365**	0,79	1.75
								1 ½	**CMAS0281525381**	**CMAS0381525381**	0,78	1.73
27	165,21	6.504	166,40	6.551	86,20	3.394	25		**CMAS028152725**	**CMAS038152725**	1,01	2.22
							30		**CMAS028152730**	**CMAS038152730**	1,00	2.20
							35		**CMAS028152735**	**CMAS038152735**	0,98	2.17
							40		**CMAS028152740**	**CMAS038152740**	0,97	2.14
								1	**CMAS0281527254**	**CMAS0381527254**	1,00	2.20
								1 ¼	**CMAS0281527317**	**CMAS0381527317**	0,98	2.16
								1 ⅜	**CMAS0281527349**	**CMAS0381527349**	0,98	2.16
								1 7/16	**CMAS0281527365**	**CMAS0381527365**	0,97	2.14
								1 ½	**CMAS0281527381**	**CMAS0381527381**	0,97	2.14

*Diameter is indicated.
** Imperial round bore drive sprockets are supplied with setscrew. Metric round bore drive sprockets are supplied without setscrew.

Copyright Regina Catene Calibrate s.p.a. - 2020, All rights reserved

SUITABLE FOR CHAINS:

- **915 / PHD 915**
- **PHDG 915**
- **881**
- **981 / 981M / PHD 981M**
- **PHDG 981M**
- **820**
- **HFX 820**
- **831**
- **828**
- **880 / 880M RG**
- **879**

MATERIALS

SPROCKETS: **PGF** REINFORCED POLYAMIDE

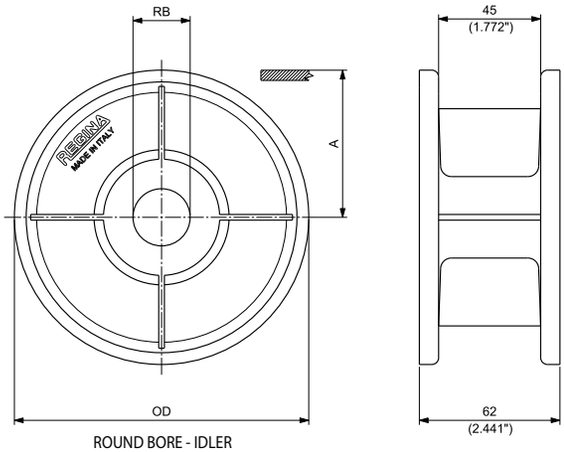

ROUND BORE - IDLER

MOULDED SOLID IDLER WHEELS

N. TEETH	OUTSIDE DIAMETER OD mm	inch	WEAR STRIP POSITIONING A mm	inch	BORE SIZE* mm	inch	PART NUMBER ROUND BORE RB IDLER	WEIGHT Kg	lbs
					25		**CMT032502101**	0,22	0.48
					30		**CMT032502102**	0,22	0.49
					35		**CMT032502103**	0,22	0.49
					40		**CMT032502104**	0,20	0.44
21	129,80	5.110	64,90	2.555		1	CMT032502106	0,22	0.49
						1 ¼	CMT032502108	0,21	0.47
						1 ⅜	CMT032502111	0,21	0.47
						1 7/16	CMT032502109	0,20	0.44
						1 ½	CMT032502110	0,22	0.49
					25		**CMT032502301**	0,25	0.54
					30		**CMT032502302**	0,25	0.55
					35		**CMT032502303**	0,24	0.53
					40		**CMT032502304**	0,24	0.54
23	142,30	5.602	71,15	2.801		1	CMT032502306	0,24	0.54
						1 ¼	CMT032502308	0,24	0.53
						1 ⅜	CMT032502311	0,24	0.53
						1 7/16	CMT032502309	0,24	0.53
						1 ½	CMT032502310	0,25	0.55
					25		**CMT032502501**	0,30	0.65
					30		**CMT032502502**	0,30	0.66
					35		**CMT032502503**	0,29	0.64
					40		**CMT032502504**	0,28	0.62
25	154,70	6.091	77,35	3.045		1	CMT032502506	0,30	0.65
						1 ¼	CMT032502508	0,29	0.64
						1 ⅜	CMT032502511	0,29	0.64
						1 7/16	CMT032502509	0,29	0.64
						1 ½	CMT032502510	0,28	0.61

*Diameter is indicated.

Copyright Regina Catene Calibrate s.p.a. - 2020, All rights reserved

SUITABLE FOR CHAINS:

- **915 / PHD 915**
- **PHDG 915**
- **881**
- **981 / 981M / PHD 981M**
- **PHDG 981M**
- **820**
- **HFX 820**
- **831**
- **828**
- **880 / 880M RG**

MATERIALS		
SPROCKETS:	PGF	REINFORCED POLYAMIDE
SCREWS:	SS	STAINLESS STEEL
NUTS:	S+ZN	ZINC PLATED STEEL

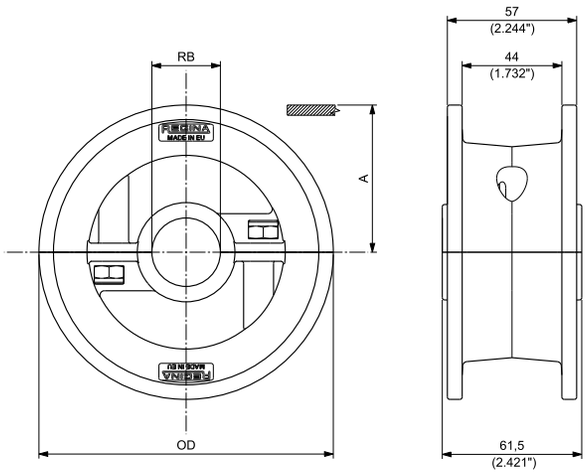

ROUND BORE - IDLER

MOULDED SPLIT IDLER WHEELS

N. TEETH	OUTSIDE DIAMETER OD mm	inch	WEAR STRIP POSITIONING A mm	inch	BORE SIZE* mm	inch	PART NUMBER ROUND BORE RB IDLER	WEIGHT Kg	lbs
21	129,80	5.110	64,90	2.555	25		**CMTS048152125**	0,33	0.72
					30		**CMTS048152130**	0,33	0.73
					35		**CMTS048152135**	0,31	0.68
					40		**CMTS048152140**	0,34	0.76
					45		**CMTS048152145**	0,31	0.69
						1	**CMTS0481521254**	0,33	0.72
						1 ¼	**CMTS0481521317**	0,32	0.71
23	142,30	5.602	71,15	2.801	25		**CMTS048152325**	0,36	0.80
					30		**CMTS048152330**	0,37	0.81
					35		**CMTS048152335**	0,35	0.76
					40		**CMTS048152340**	0,38	0.84
					45		**CMTS048152345**	0,35	0.77
						1	**CMTS0481523254**	0,36	0.80
						1 ¼	**CMTS0481523317**	0,36	0.79
25	154,70	6.091	77,35	3.045	25		**CMTS048152525**	0,40	0.89
					30		**CMTS048152530**	0,41	0.90
					35		**CMTS048152535**	0,39	0.85
					40		**CMTS048152540**	0,42	0.92
					45		**CMTS048152545**	0,39	0.86
						1	**CMTS0481525254**	0,40	0.89
						1 ¼	**CMTS0481525317**	0,40	0.88

*Diameter is indicated.

Copyright Regina Catene Calibrate s.p.a. - 2020, All rights reserved

SUITABLE FOR CHAINS:

- **915 / PHD 915**
- **PHDG 915**
- **881**
- **981 / 981M / PHD 981M**
- **PHDG 981M**
- **820**
- **HFX 820**
- **831**
- **828**
- **880 / 880M RG**
- **879**

MATERIALS		
SPROCKETS:	PA	POLYAMIDE
SCREWS:	SS	STAINLESS STEEL
NUTS:	B	BRASS

17T & 19T IDLER WHEELS

(for 21T, 23T & 25T see next page)

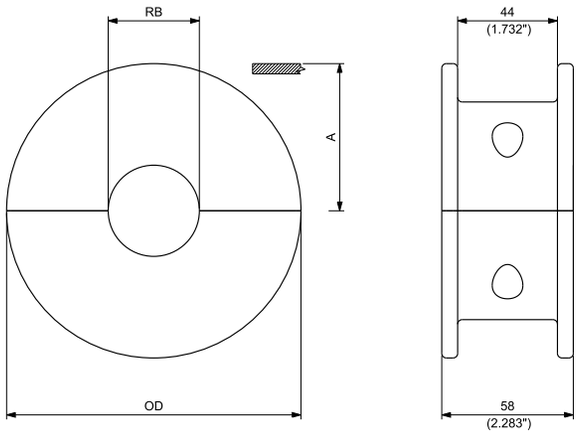

ROUND BORE - IDLER

MACHINED SPLIT IDLER WHEELS

N. TEETH	OUTSIDE DIAMETER OD mm	inch	WEAR STRIP POSITIONING A mm	inch	BORE SIZE* mm	inch	PART NUMBER ROUND BORE RB IDLER	WEIGHT Kg	lbs
17	106,50	4.193	53,25	2.096	25		**CMAS048151725**	0,34	0.76
					30		**CMAS048151730**	0,33	0.73
					35		**CMAS048151735**	0,31	0.69
					40		**CMAS048151740**	0,29	0.65
						1	**CMAS0481517254**	0,34	0.76
						1 ¼	**CMAS0481517317**	0,32	0.71
						1 ⅜	**CMAS0481517349**	0,32	0.71
						1 7⁄16	**CMAS0481517365**	0,31	0.69
						1 ½	**CMAS0481517381**	0,30	0.66
19	118,00	4.646	59,00	2.323	25		**CMAS048151925**	0,45	1.00
					30		**CMAS048151930**	0,44	0.97
					35		**CMAS048151935**	0,42	0.93
					40		**CMAS048151940**	0,40	0.89
						1	**CMAS0481519254**	0,45	1.00
						1 ¼	**CMAS0481519317**	0,42	0.92
						1 ⅜	**CMAS0481519349**	0,42	0.92
						1 7⁄16	**CMAS0481519365**	0,40	0.89
						1 ½	**CMAS0481519381**	0,38	0.84

*Diameter is indicated.

Copyright Regina Catene Calibrate s.p.a. - 2020, All rights reserved

SUITABLE FOR CHAINS:

- **915 / PHD 915**
- **PHDG 915**
- **881 / 981 / 981M / PHD 981M**
- **PHDG 981M**
- **820 / HFX 820**
- **831**
- **828**
- **880 / 880M RG**
- **879**

MATERIALS		
SPROCKETS:	PA	POLYAMIDE
SCREWS:	SS	STAINLESS STEEL
NUTS:	B	BRASS

21T, 23T & 25T IDLER WHEELS

(for 17T & 19T see previous page)

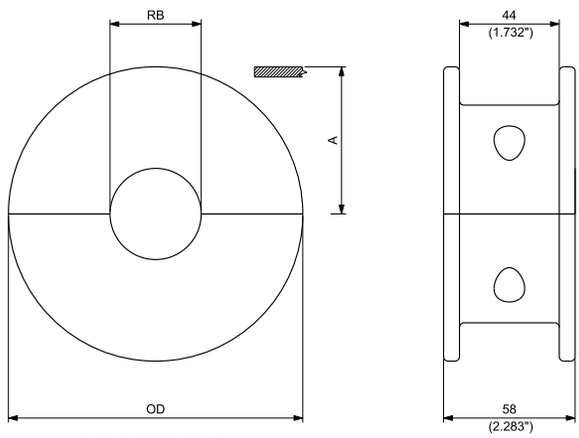

ROUND BORE - IDLER

MACHINED SPLIT IDLER WHEELS

N. TEETH	OUTSIDE DIAMETER OD mm	inch	WEAR STRIP POSITIONING A mm	inch	BORE SIZE* mm	inch	PART NUMBER ROUND BORE RB IDLER	WEIGHT Kg	lbs
21	129,80	5.110	64,90	2.555	25		**CMAS048152125**	0,58	1.27
					30		**CMAS048152130**	0,56	1.24
					35		**CMAS048152135**	0,54	1.20
					40		**CMAS048152140**	0,52	1.15
						1	CMAS0481521254	0,58	1.27
						1 ¼	CMAS0481521317	0,56	1.24
						1 7/16	CMAS0481521365	0,54	1.20
						1 ½	CMAS0481521381	0,53	1.17
23	142,30	5.602	71,15	2.801	25		**CMAS048152325**	0,72	1.58
					30		**CMAS048152330**	0,70	1.55
					35		**CMAS048152335**	0,69	1.51
					40		**CMAS048152340**	0,67	1.47
						1	CMAS0481523254	0,72	1.58
						1 ¼	CMAS0481523317	0,70	1.55
						1 7/16	CMAS0481523365	0,69	1.51
						1 ½	CMAS0481523381	0,67	1.49
25	154,70	6.091	77,35	3.045	25		**CMAS048152525**	0,87	1.92
					30		**CMAS048152530**	0,85	1.88
					35		**CMAS048152535**	0,84	1.85
					40		**CMAS048152540**	0,82	1.80
						1	CMAS0481525254	0,87	1.91
						1 ¼	CMAS0481525317	0,85	1.88
						1 7/16	CMAS0481525365	0,84	1.85
						1 ½	CMAS0481525381	0,83	1.82

*Diameter is indicated.

Copyright Regina Catene Calibrate s.p.a. - 2020, All rights reserved

SUITABLE FOR CHAINS:
- **2815 / PHD 2815**
- **PHDG 2815**

MATERIALS		
SPROCKETS:	PGF	REINFORCED POLYAMIDE
SCREWS:	SS	STAINLESS STEEL
NUTS:	B+NC	NICKEL PLATED BRASS

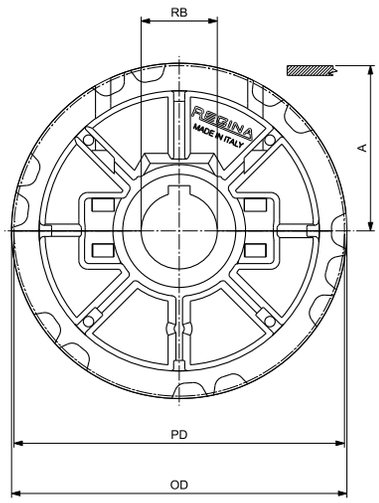

ROUND BORE - DRIVE

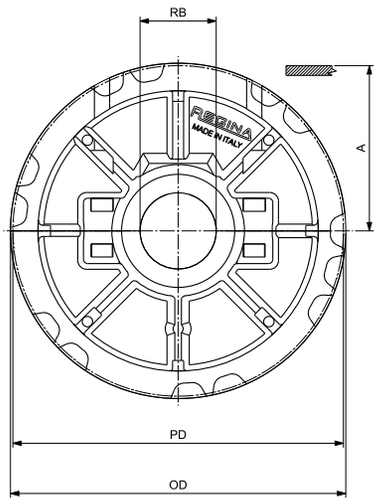

ROUND BORE - IDLER

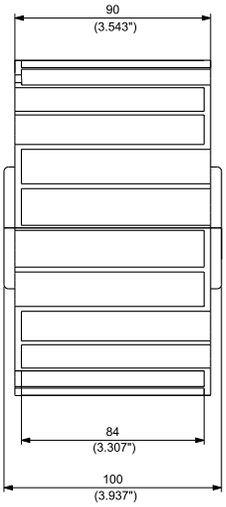

MOULDED SPLIT DRIVE AND IDLER SPROCKETS

N. TEETH	PITCH DIAMETER PD		OUTSIDE DIAMETER OD		WEAR STRIP POSITIONING A		BORE SIZE*		PART NUMBER ROUND BORE RB		WEIGHT	
	mm	inch	mm	inch	mm	inch	mm	inch**	DRIVE	IDLER	Kg	lbs
							30		**CMT022802502**	**CMT032802502**	1,05	2.30
							35		**CMT022802503**	**CMT032802503**	1,03	2.27
							40		**CMT022802504**	**CMT032802504**	1,01	2.22
							45		**CMT022802505**	**CMT032802505**	0,98	2.16
25	153,20	6.031	154,20	6.071	80,00	3.150		1 ¼	**CMT022802508**	**CMT032802508**	1,04	2.29
								1 ⅜	**CMT022802511**	**CMT032802511**	1,03	2.27
								1 7/16	**CMT022802509**	**CMT032802509**	1,02	2.25
								1 ½	**CMT022802510**	**CMT032802510**	1,01	2.24

*Diameter is indicated.
** Imperial round bore drive sprockets are supplied with setscrew. Metric round bore drive sprockets are supplied without setscrew.

Copyright Regina Catene Calibrate s.p.a. - 2020, All rights reserved

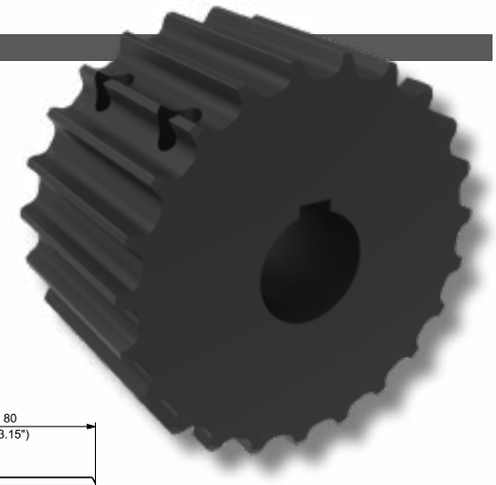

SUITABLE FOR CHAINS:

- **2815 / PHD 2815**
- **PHDG 2815**
- **821**
- **HFX 821**
- **LBP 821**

MATERIALS		
SPROCKETS:	PA	POLYAMIDE
SCREWS:	SS	STAINLESS STEEL
NUTS:	B	BRASS

19T, 21T & 23T SPROCKETS

(for 25T , 27T & 29T see next page)

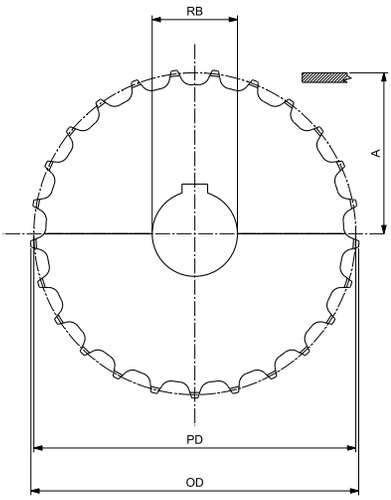

ROUND BORE - DRIVE

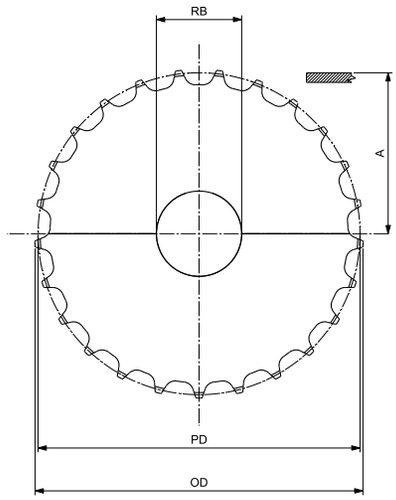

ROUND BORE - IDLER

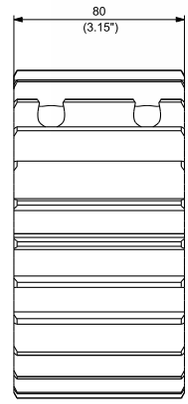

MACHINED SPLIT DRIVE AND IDLER SPROCKETS

N. TEETH	PITCH DIAMETER PD		OUTSIDE DIAMETER OD		WEAR STRIP POSITIONING A		BORE SIZE*		PART NUMBER ROUND BORE RB		WEIGHT	
	mm	inch	mm	inch	mm	inch	mm	inch**	DRIVE	IDLER	Kg	lbs
19	117,34	4.620	117,00	4.606	62,27	2.452	25		**CMAS0228151925**	**CMAS0328151925**	0,87	1.92
							30		**CMAS0228151930**	**CMAS0328151930**	0,85	1.88
							35		**CMAS0228151935**	**CMAS0328151935**	0,83	1.83
							40		**CMAS0228151940**	**CMAS0328151940**	0,80	1.77
								1	CMAS02281519254	CMAS03281519254	0,87	1.92
								1 ¼	CMAS02281519317	CMAS03281519317	0,87	1.92
								1 ⅜	CMAS02281519349	CMAS03281519349	0,85	1.88
								1 7/16	CMAS02281519365	CMAS03281519365	0,82	1.81
								1 ½	CMAS02281519381	CMAS03281519381	0,74	1.64
21	129,26	5.089	129,40	5.094	68,23	2.686	25		**CMAS0228152125**	**CMAS0328152125**	1,07	2.36
							30		**CMAS0228152130**	**CMAS0328152130**	1,04	2.29
							35		**CMAS0228152135**	**CMAS0328152135**	1,01	2.23
							40		**CMAS0228152140**	**CMAS0328152140**	0,99	2.17
								1	CMAS02281521254	CMAS03281521254	1,06	2.33
								1 ¼	CMAS02281521317	CMAS03281521317	1,06	2.33
								1 ⅜	CMAS02281521349	CMAS03281521349	1,04	2.29
								1 7/16	CMAS02281521365	CMAS03281521365	0,99	2.17
								1 ½	CMAS02281521381	CMAS03281521381	1,00	2.20
23	141,22	5.560	141,90	5.587	74,21	2.922	25		**CMAS0228152325**	**CMAS0328152325**	1,27	2.81
							30		**CMAS0228152330**	**CMAS0328152330**	1,25	2.76
							35		**CMAS0228152335**	**CMAS0328152335**	1,23	2.71
							40		**CMAS0228152340**	**CMAS0328152340**	1,17	2.58
								1	CMAS02281523254	CMAS03281523254	1,27	2.80
								1 ¼	CMAS02281523317	CMAS03281523317	1,27	2.80
								1 ⅜	CMAS02281523349	CMAS03281523349	1,25	2.76
								1 7/16	CMAS02281523365	CMAS03281523365	1,23	2.71
								1 ½	CMAS02281523381	CMAS03281523381	1,21	2.68

*Diameter is indicated.
** Imperial round bore drive sprockets are supplied with setscrew. Metric round bore drive sprockets are supplied without setscrew.

Copyright Regina Catene Calibrate s.p.a. - 2020, All rights reserved

SUITABLE FOR CHAINS:
- **2815 / PHD 2815**
- **PHDG 2815**
- **821**
- **HFX 821**
- **LBP 821**

MATERIALS		
SPROCKETS:	PA	POLYAMIDE
SCREWS:	SS	STAINLESS STEEL
NUTS:	B	BRASS

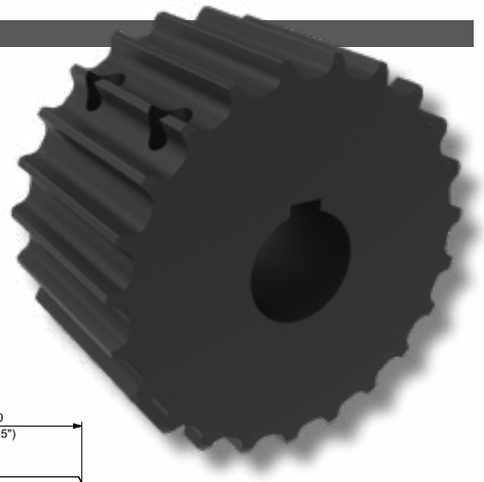

25T, 27T & 29T SPROCKETS
(for 19T, 21T & 23T see previous page)

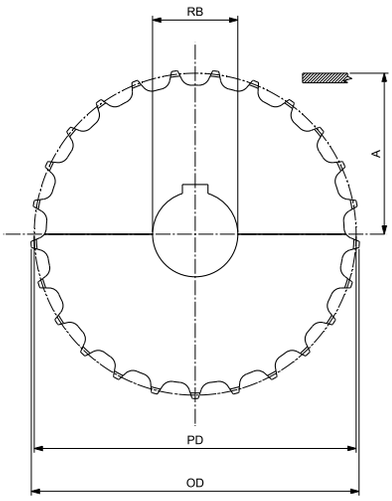

ROUND BORE - DRIVE

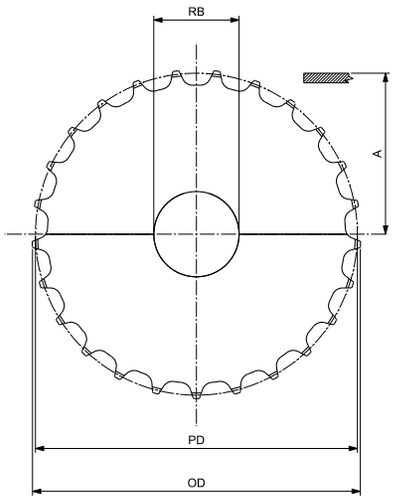

ROUND BORE - IDLER

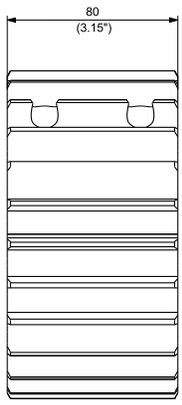

MACHINED SPLIT DRIVE AND IDLER SPROCKETS

N. TEETH	PITCH DIAMETER PD		OUTSIDE DIAMETER OD		WEAR STRIP POSITIONING A		BORE SIZE*		PART NUMBER ROUND BORE RB		WEIGHT	
	mm	inch	mm	inch	mm	inch	mm	inch**	DRIVE	IDLER	Kg	lbs
25	153,20	6.031	154,20	6.071	80,20	3.157	25		CMAS0228152525	CMAS0328152525	1,56	3.45
							30		CMAS0228152530	CMAS0328152530	1,54	3.41
							35		CMAS0228152535	CMAS0328152535	1,52	3.36
							40		CMAS0228152540	CMAS0328152540	1,49	3.29
								1	CMAS02281525254	CMAS03281525254	1,56	3.45
								1 ¼	CMAS02281525317	CMAS03281525317	1,54	3.41
								1 ⅜	CMAS02281525349	CMAS03281525349	1,54	3.41
								1 7/16	CMAS02281525365	CMAS03281525365	1,52	3.36
								1 ½	CMAS02281525381	CMAS03281525381	1,50	3.32
27	165,21	6.504	166,40	6.551	86,21	3.394	25		CMAS0228152725	CMAS0328152725	1,82	4.00
							30		CMAS0228152730	CMAS0328152730	1,80	3.96
							35		CMAS0228152735	CMAS0328152735	1,77	3.91
							40		CMAS0228152740	CMAS0328152740	1,75	3.85
								1	CMAS02281527254	CMAS03281527254	1,81	4.00
								1 ¼	CMAS02281527317	CMAS03281527317	1,81	4.00
								1 ⅜	CMAS02281527349	CMAS03281527349	1,80	3.96
								1 7/16	CMAS02281575365	CMAS03281575365	1,77	3.91
								1 ½	CMAS02281527381	CMAS03281527381	1,76	3.48
29	177,23	6.978	178,7	7.035	92,02	3.623	25		CMAS0228152925	CMAS0328152925	2,21	4.87
							30		CMAS0228152930	CMAS0328152930	2,19	4.83
							35		CMAS0228152935	CMAS0328152935	2,17	4.78
							40		CMAS0228152940	CMAS0328152940	2,14	4.72
								1	CMAS02281529254	CMAS03281529254	2,20	4.85
								1 ¼	CMAS02281529317	CMAS03281529317	2,19	4.83
								1 ⅜	CMAS02281529349	CMAS03281529349	2,17	4.78
								1 7/16	CMAS02281529365	CMAS03281529365	2,14	4.72
								1 ½	CMAS02281529381	CMAS03281529381	2,12	4.67

*Diameter is indicated.
** Imperial round bore drive sprockets are supplied with setscrew. Metric round bore drive sprockets are supplied without setscrew.

Copyright Regina Catene Calibrate s.p.a. - 2020, All rights reserved

SUITABLE FOR CHAINS:
- **2815 / PHD 2815**
- **PHDG 2815**

MATERIALS		
SPROCKETS:	PA	POLYAMIDE
SCREWS:	SS	STAINLESS STEEL
NUTS:	B	BRASS

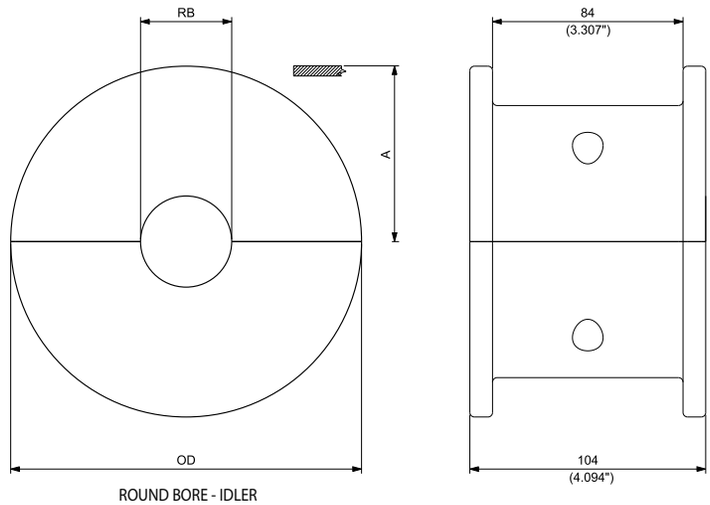

ROUND BORE - IDLER

MACHINED SPLIT IDLER WHEELS

N. TEETH	OUTSIDE DIAMETER OD mm	inch	WEAR STRIP POSITIONING A mm	inch	BORE SIZE* mm	inch	PART NUMBER ROUND BORE RB IDLER	WEIGHT Kg	lbs
19	118,00	4.646	59,00	2.323	25		**CMAS0428151925**	0,76	1.67
					30		**CMAS0428151930**	0,73	1.61
					35		**CMAS0428151935**	0,70	1.55
					40		**CMAS0428151940**	0,67	1.47
						1	CMAS04281519254	0,76	1.67
						1 ¼	CMAS04281519317	0,73	1.61
						1 ⅜	CMAS04281519349	0,70	1.55
						1 ½	CMAS04281519381	0,63	1.39
21	129,80	5.110	64,90	2.555	25		**CMAS0428152125**	0,97	2.14
					30		**CMAS0428152130**	0,94	2.08
					35		**CMAS0428152135**	0,91	2.02
					40		**CMAS0428152140**	0,88	1.94
						1	CMAS04281521254	0,97	2.14
						1 ¼	CMAS04281521317	0,94	2.08
						1 ⅜	CMAS04281521349	0,91	2.02
						1 ½	CMAS04281521381	0,89	1.97
23	142,30	5.602	71,15	2.801	25		**CMAS0428152325**	1,22	2.69
					30		**CMAS0428152330**	1,20	2.64
					35		**CMAS0428152335**	1,16	2.57
					40		**CMAS0428152340**	1,13	2.49
						1	CMAS04281523254	1,22	2.69
						1 ¼	CMAS04281523317	1,20	2.64
						1 ⅜	CMAS04281523349	1,16	2.57
						1 ½	CMAS04281523381	1,14	2.52
25	154,70	6.091	77,35	3.045	25		**CMAS0428152525**	1,49	3.29
					30		**CMAS0428152530**	1,46	3.23
					35		**CMAS0428152535**	1,43	3.16
					40		**CMAS0428152540**	1,40	3.08
						1	CMAS04281525254	1,49	3.28
						1 ¼	CMAS04281525317	1,46	3.23
						1 ⅜	CMAS04281525349	1,43	3.16
						1 ½	CMAS04281525381	1,41	3.12

*Diameter is indicated.

Copyright Regina Catene Calibrate s.p.a. - 2020, All rights reserved

SUITABLE FOR CHAINS:
- **PHD 9157**
- **PHDG 9157**
- **PHD 9857M**
- **PHDG 9857M**

MATERIALS		
SPROCKETS:	PA	POLYAMIDE
SCREWS:	SS	STAINLESS STEEL
NUTS:	B	BRASS

19T, 21T & 23T SPROCKETS
(for 25T & 27T see next page)

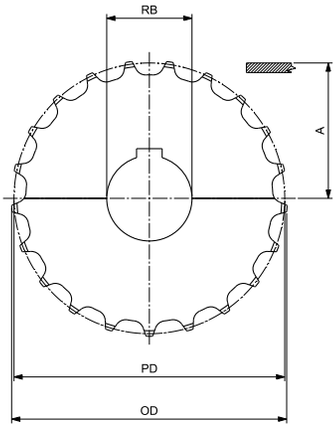

ROUND BORE - DRIVE

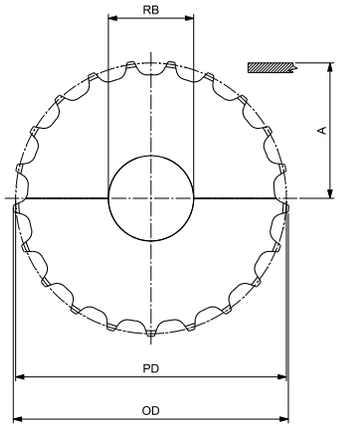

ROUND BORE - IDLER

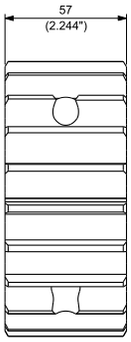

MACHINED SPLIT IDLER WHEELS
SEE PAGE 138

MACHINED SPLIT DRIVE AND IDLER SPROCKETS

N. TEETH	PITCH DIAMETER PD		OUTSIDE DIAMETER OD		WEAR STRIP POSITIONING A		BORE SIZE*		PART NUMBER ROUND BORE RB		WEIGHT	
	mm	inch	mm	inch	mm	inch	mm	inch**	DRIVE	IDLER	Kg	lbs
19	117,34	4.620	117,00	4.606	62,07	2.444	25		**CMAS0291571925**	**CMAS0391571925**	0,68	1.50
							30		**CMAS0291571930**	**CMAS0391571930**	0,66	1.46
							35		**CMAS0291571935**	**CMAS0391571935**	0,64	1.41
							40		**CMAS0291571940**	**CMAS0391571940**	0,63	1.39
								1	CMAS02915719254	CMAS03915719254	0,68	1.50
								1 ¼	CMAS02915719317	CMAS03915719317	0,67	1.48
								1 ⅜	CMAS02915719349	CMAS03915719349	0,66	1.46
								1 7/16	CMAS02915719365	CMAS03915719365	0,64	1.41
								1 ½	CMAS02915719381	CMAS03915719381	0,62	1.37
21	129,26	5.089	129,40	5.094	68,03	2.678	25		**CMAS0291572125**	**CMAS0391572125**	0,74	1.64
							30		**CMAS0291572130**	**CMAS0391572130**	0,73	1.60
							35		**CMAS0291572135**	**CMAS0391572135**	0,71	1.57
							40		**CMAS0291572140**	**CMAS0391572140**	0,69	1.53
								1	CMAS02915721254	CMAS03915721254	0,74	1.63
								1 ¼	CMAS02915721317	CMAS03915721381	0,73	1.60
								1 ⅜	CMAS02915721349	CMAS03915721349	0,73	1.60
								1 7/16	CMAS02915721365	CMAS03915721365	0,71	1.57
								1 ½	CMAS02915721381	CMAS03915721381	0,70	1.54
23	141,22	5.560	141,90	5.587	74,01	2.914	25		**CMAS0291572325**	**CMAS0391572325**	0,99	2.18
							30		**CMAS0291572330**	**CMAS0391572330**	0,98	2.16
							35		**CMAS0291572335**	**CMAS0391572335**	0,96	2.12
							40		**CMAS0291572340**	**CMAS0391572340**	0,94	2.07
								1	CMAS02915723254	CMAS03915723254	0,99	2.18
								1 ¼	CMAS02915723317	CMAS03915723317	0,99	2.18
								1 ⅜	CMAS02915723349	CMAS03915723349	0,98	2.16
								1 7/16	CMAS02915723365	CMAS03915723365	0,96	2.12
								1 ½	CMAS02915723381	CMAS03915723381	0,94	2.07

*Diameter is indicated.
** Imperial round bore drive sprockets are supplied with setscrew. Metric round bore drive sprockets are supplied without setscrew.

Copyright Regina Catene Calibrate s.p.a. - 2020, All rights reserved

SUITABLE FOR CHAINS:

- **PHD 9157**
- **PHDG 9157**
- **PHD 9857M**
- **PHDG 9857M**

MATERIALS		
SPROCKETS:	PA	POLYAMIDE
SCREWS:	SS	STAINLESS STEEL
NUTS:	B	BRASS

25T & 27T SPROCKETS

(for 19T, 21T & 23T see previous page)

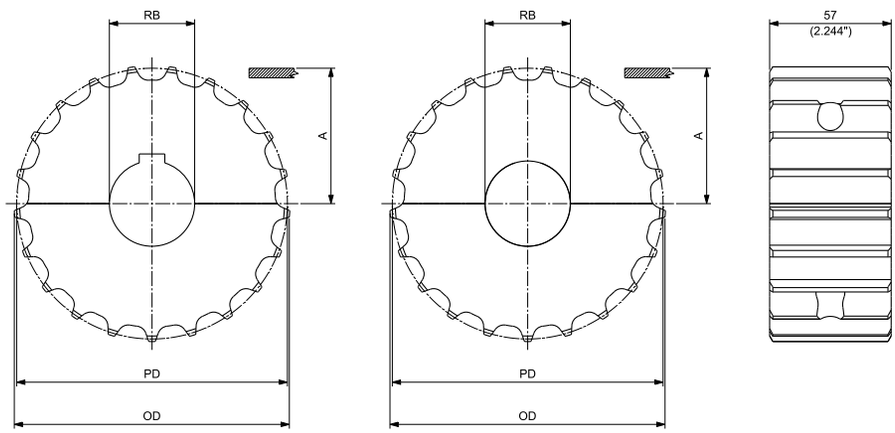

ROUND BORE - DRIVE

ROUND BORE - IDLER

MACHINED SPLIT IDLER WHEELS
SEE PAGE 138

MACHINED SPLIT DRIVE AND IDLER SPROCKETS

N. TEETH	PITCH DIAMETER PD		OUTSIDE DIAMETER OD		WEAR STRIP POSITIONING A		BORE SIZE*		PART NUMBER ROUND BORE RB		WEIGHT	
	mm	inch	mm	inch	mm	inch	mm	inch**	DRIVE	IDLER	Kg	lbs
25	153,20	6.031	154,20	6.071	80,00	3.150	25		**CMAS0291572525**	**CMAS0391572525**	1,09	2.40
							30		**CMAS0291572530**	**CMAS0391572530**	1,07	2.37
							35		**CMAS0291572535**	**CMAS0391572535**	1,06	2.33
							40		**CMAS0291572540**	**CMAS0391572540**	1,04	2.29
								1	**CMAS02915725254**	**CMAS03915725254**	1,09	2.40
								1 ¼	**CMAS02915725317**	**CMAS03915725317**	1,09	2.40
								1 ⅜	**CMAS02915725349**	**CMAS03915725349**	1,07	2.37
								1 7/16	**CMAS02915725365**	**CMAS03915725365**	1,06	2.33
								1 ½	**CMAS02915725381**	**CMAS03915725381**	1,05	2.31
27	165,21	6.504	166,40	6,551	86,01	3.386	25		**CMAS0291572725**	**CMAS0391572725**	1,27	2.80
							30		**CMAS0291572730**	**CMAS0391572730**	1,26	2.77
							35		**CMAS0291572735**	**CMAS0391572735**	1,24	2.74
							40		**CMAS0291572740**	**CMAS0391572740**	1,22	2.69
								1	**CMAS02915727254**	**CMAS03915727254**	1,27	2.80
								1 ¼	**CMAS02915727317**	**CMAS03915727317**	1,27	2.80
								1 ⅜	**CMAS02915727349**	**CMAS03915727349**	1,26	2.77
								1 7/16	**CMAS02915727365**	**CMAS03915727365**	1,24	2.74
								1 ½	**CMAS02915727381**	**CMAS03915727381**	1,23	2.71

*Diameter is indicated.
** Imperial round bore drive sprockets are supplied with setscrew. Metric round bore drive sprockets are supplied without setscrew.

Copyright Regina Catene Calibrate s.p.a. - 2020, All rights reserved

SUITABLE FOR CHAINS:
- **803**

MATERIALS		
SPROCKETS:	PA	POLYAMIDE
SCREWS:	SS	STAINLESS STEEL
NUTS:	B	BRASS

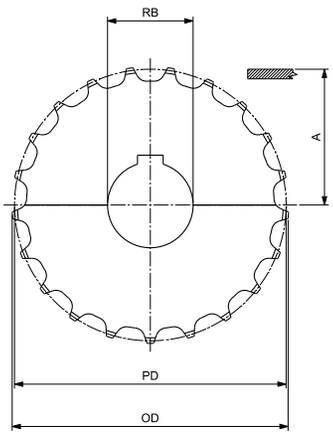

ROUND BORE - DRIVE

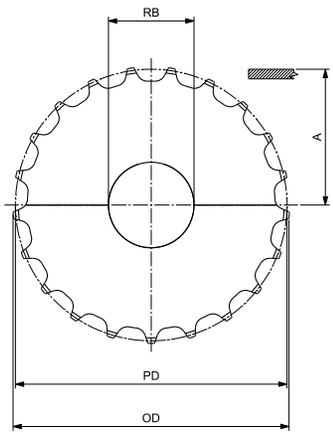

ROUND BORE - IDLER

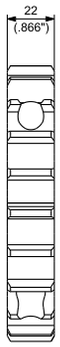

MOULDED SPLIT SPROCKETS
SEE PAGE 134

MACHINED SPLIT DRIVE AND IDLER SPROCKETS

N. TEETH	PITCH DIAMETER PD		OUTSIDE DIAMETER OD		WEAR STRIP POSITIONING A		BORE SIZE*		PART NUMBER ROUND BORE RB		WEIGHT	
	mm	inch	mm	inch	mm	inch	mm	inch**	DRIVE	IDLER	Kg	lbs
17	105,47	4.152	104,40	4.110	55,94	2.202	25		CMAS028031725	CMAS038031725	0,21	0.47
							30		CMAS028031730	CMAS038031730	0,20	0.45
							35		CMAS028031735	CMAS038031735	0,20	0.43
							40		CMAS028031740	CMAS038031740	0,20	0.45
								1	CMAS0280317254	CMAS0380317254	0,21	0.46
								1¼	CMAS0280317317	CMAS0380317317	0,20	0.44
								1 ½	CMAS0280317381	CMAS0380317381	0,19	0.42
19	117,34	4.620	117,00	4.606	62,87	2.475	25		CMAS028031925	CMAS038031925	0,26	0.57
							30		CMAS028031930	CMAS038031930	0,25	0.56
							35		CMAS028031935	CMAS038031935	0,25	0.54
							40		CMAS028031940	CMAS038031940	0,24	0.52
								1	CMAS0280319254	CMAS0380319254	0,26	0.57
								1¼	CMAS0280319317	CMAS0380319317	0,24	0.54
								1 ½	CMAS0280319381	CMAS0380319381	0,22	0.49
21	129,26	5.089	129,40	5.094	67,83	2.670	25		CMAS028032125	CMAS038032125	0,31	0.68
							30		CMAS028032130	CMAS038032130	0,30	0.67
							35		CMAS028032135	CMAS038032135	0,30	0.65
							40		CMAS028032140	CMAS038032140	0,29	0.63
								1	CMAS0280321254	CMAS0380321254	0,31	0.68
								1¼	CMAS0280321317	CMAS0380321317	0,29	0.64
								1 ½	CMAS0280321381	CMAS0380321381	0,27	0.59
23	141,22	5.560	141,90	5.587	73,81	2.906	25		CMAS028032325	CMAS038032325	0,37	0.80
							30		CMAS028032330	CMAS038032330	0,36	0.79
							35		CMAS028032335	CMAS038032335	0,35	0.78
							40		CMAS028032340	CMAS038032340	0,35	0.78
								1	CMAS0280323254	CMAS0380323254	0,36	0.80
								1¼	CMAS0280323317	CMAS0380323317	0,35	0.77
								1 ½	CMAS0280323381	CMAS0380323381	0,33	0.72
25	153,19	6.031	154,20	6.071	79,80	3.142	25		CMAS028032525	CMAS038032525	0,45	1.00
							30		CMAS028032530	CMAS038032530	0,45	0.99
							35		CMAS028032535	CMAS038032535	0,44	0.97
							40		CMAS028032540	CMAS038032540	0,43	0.96
								1	CMAS0280325254	CMAS0380325254	0,45	1.00
								1¼	CMAS0280325317	CMAS0380325317	0,44	0.96
								1 ½	CMAS0280325381	CMAS0380325381	0,38	0.84

*Diameter is indicated.
** Imperial round bore drive sprockets are supplied with setscrew. Metric round bore drive sprockets are supplied without setscrew.

Copyright Regina Catene Calibrate s.p.a. - 2020, All rights reserved

SUITABLE FOR CHAINS:

- **881 / 881T**
- **981 / 981T**
- **PHDG 981T**
- **982T**
- **803**

MATERIALS		
SPROCKETS:	PGF	REINFORCED POLYAMIDE
SCREWS:	SS	STAINLESS STEEL
NUTS:	B+NC	NICKEL PLATED BRASS

19T & 21T SPROCKETS

(for 23T & 25T see next page)

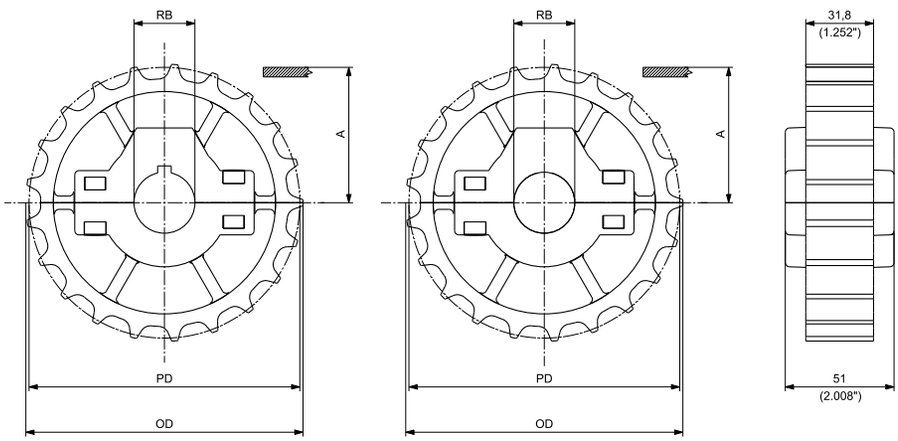

ROUND BORE - DRIVE

ROUND BORE - IDLER

MOULDED SPLIT IDLER WHEELS FOR 881/981 CHAINS

SEE PAGE 124

MOULDED SOLID IDLER WHEELS FOR 881/981 CHAINS

SEE PAGE 123

MOULDED SPLIT DRIVE AND IDLER SPROCKETS

N. TEETH	PITCH DIAMETER PD		OUTSIDE DIAMETER OD		WEAR STRIP POSITIONING A		BORE SIZE*		PART NUMBER ROUND BORE RB		WEIGHT	
	mm	inch	mm	inch	mm	inch	mm	inch**	DRIVE	IDLER	Kg	lbs
NEW 19	117,34	4.620	117,00	4.606	62,07	2.444	25		**CMT028811901**	**CMT038811901**	0,33	0.73
							30		**CMT028811902**	**CMT038811902**	0,32	0.71
							35		**CMT028811903**	**CMT038811903**	0,31	0.68
							40		**CMT028811904**	**CMT038811904**	0,30	0.66
							45		**CMT028811905**	**CMT038811905**	0,29	0.64
								1	CMT028811906	CMT038811906	0,33	0.73
								1 ¼	CMT028811908	CMT038811908	0,32	0.71
								1 ⅜	CMT028811911	CMT038811911	0,32	0.71
								1 7/16	CMT028811909	CMT038811909	0,31	0.68
								1 ½	CMT028811910	CMT038811910	0,31	0.68
21	129,30	5.091	130,00	5.118	68,05	2.679	25		**CMT028812101**	**CMT038812101**	0,43	0.95
							30		**CMT028812102**	**CMT038812102**	0,42	0.93
							35		**CMT028812103**	**CMT038812103**	0,41	0.91
							40		**CMT028812104**	**CMT038812104**	0,40	0.88
							45		**CMT028812105**	**CMT038812105**	0,39	0.85
								1	CMT028812106	CMT038812106	0,43	0.95
								1 ¼	CMT028812108	CMT038812108	0,42	0.92
								1 ⅜	CMT028812111	CMT038812111	0,42	0.92
								1 7/16	CMT028812109	CMT038812109	0,41	0.90
								1 ½	CMT028812110	CMT038812110	0,40	0.89

*Diameter is indicated.

** Imperial round bore drive sprockets are supplied with setscrew. Metric round bore drive sprockets are supplied without setscrew.

Copyright Regina Catene Calibrate s.p.a. - 2020, All rights reserved

SUITABLE FOR CHAINS:
- **881 / 881T**
- **981 / 981T**
- **PHDG 981T**
- **982T**
- **803**

MATERIALS		
SPROCKETS:	PGF	REINFORCED POLYAMIDE
SCREWS:	SS	STAINLESS STEEL
NUTS:	B+NC	NICKEL PLATED BRASS

23T & 25T SPROCKETS
(for 19T & 21T see previous page)

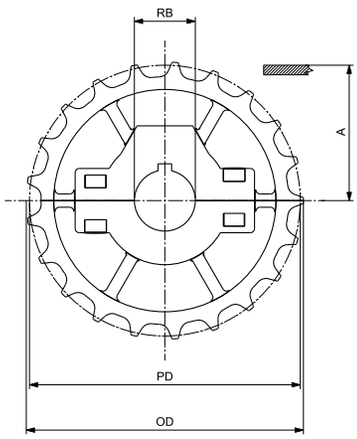

ROUND BORE - DRIVE

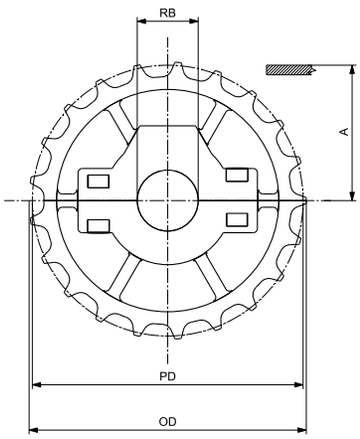

ROUND BORE - IDLER

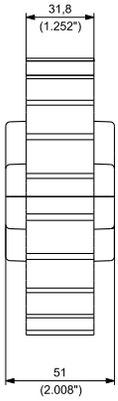

MOULDED SPLIT IDLER WHEELS FOR 881/981 CHAINS
SEE PAGE 124

MOULDED SOLID IDLER WHEELS FOR 881/981 CHAINS
SEE PAGE 123

MOULDED SPLIT DRIVE AND IDLER SPROCKETS

N. TEETH	PITCH DIAMETER PD		OUTSIDE DIAMETER OD		WEAR STRIP POSITIONING A		BORE SIZE*		PART NUMBER ROUND BORE RB		WEIGHT	
	mm	inch	mm	inch	mm	inch	mm	inch**	DRIVE	IDLER	Kg	lbs
23	141,20	5.559	141,90	5.587	74,00	2.913	25		**CMT028812301**	**CMT038812301**	0,47	1.04
							30		**CMT028812302**	**CMT038812302**	0,46	1.02
							35		**CMT028812303**	**CMT038812303**	0,45	1.00
							40		**CMT028812304**	**CMT038812304**	0,44	0.97
							45		**CMT028812305**	**CMT038812305**	0,43	0.94
								1	**CMT028812306**	**CMT038812306**	0,47	1.04
								1 ¼	**CMT028812308**	**CMT038812308**	0,46	1.01
								1 ⅜	**CMT028812311**	**CMT038812311**	0,46	1.01
								1 7/16	**CMT028812309**	**CMT038812309**	0,45	0.99
								1 ½	**CMT028812310**	**CMT038812310**	0,44	0.98
25	153,20	6.031	154,20	6.071	80,00	3.150	25		**CMT028812501**	**CMT038812501**	0,51	1.13
							30		**CMT028812502**	**CMT038812502**	0,50	1.11
							35		**CMT028812503**	**CMT038812503**	0,49	1.09
							40		**CMT028812504**	**CMT038812504**	0,48	1.06
							45		**CMT028812505**	**CMT038812505**	0,47	1.03
								1	**CMT028812506**	**CMT038812506**	0,51	1.13
								1 ¼	**CMT028812508**	**CMT038812508**	0,50	1.10
								1 ⅜	**CMT028812511**	**CMT038812511**	0,50	1.10
								1 7/16	**CMT028812509**	**CMT038812509**	0,49	1.08
								1 ½	**CMT028812510**	**CMT038812510**	0,48	1.07

*Diameter is indicated.
** Imperial round bore drive sprockets are supplied with setscrew. Metric round bore drive sprockets are supplied without setscrew.

Copyright Regina Catene Calibrate s.p.a. - 2020, All rights reserved

SUITABLE FOR CHAINS:
- **881 / 881T**
- **981 / 981T**
- **PHDG 981T**
- **982T**

MATERIALS		
SPROCKETS:	PA	POLYAMIDE
SCREWS:	SS	STAINLESS STEEL
NUTS:	B	BRASS

17T, 19T & 21T SPROCKETS
(for 23T, 25T & 27T see next page)

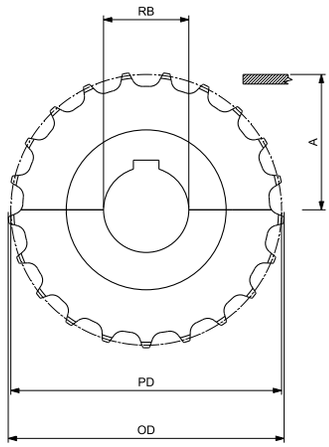

ROUND BORE - DRIVE

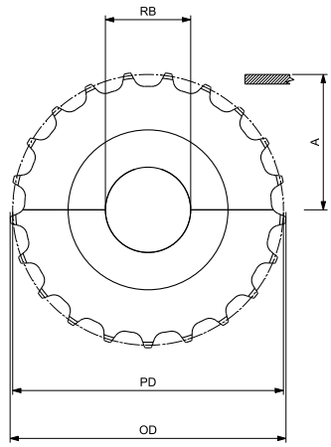

ROUND BORE - IDLER

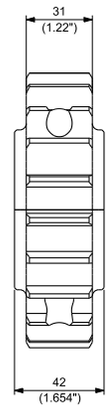

MACHINED SPLIT IDLER WHEELS FOR 881/981 CHAINS
SEE PAGE 125

MACHINED SPLIT DRIVE AND IDLER SPROCKETS

N. TEETH	PITCH DIAMETER PD		OUTSIDE DIAMETER OD		WEAR STRIP POSITIONING A		BORE SIZE*		PART NUMBER ROUND BORE RB		WEIGHT	
	mm	inch	mm	inch	mm	inch	mm	inch**	DRIVE	IDLER	Kg	lbs
17	105,47	4.152	104,40	4.110	56,14	2.210	25		CMAS028811725	CMAS038811725	0,31	0.68
							30		CMAS028811730	CMAS038811730	0,30	0.66
							35		CMAS028811735	CMAS038811735	0,29	0.63
							40		CMAS028811740	CMAS038811740	0,27	0.60
								1	CMAS0288117254	CMAS0388117254	0,31	0.68
								1¼	CMAS0288117317	CMAS0388117317	0,29	0.65
								1 ⅜	CMAS0288117349	CMAS0388117349	0,29	0.65
								1 7/16	CMAS0288117365	CMAS0388117365	0,28	0.61
								1 ½	CMAS0288117381	CMAS0388117381	0,28	0.61
19	117,34	4.620	117,00	4.606	62,07	2.444	25		CMAS028811925	CMAS038811925	0,39	0.86
							30		CMAS028811930	CMAS038811930	0,38	0.84
							35		CMAS028811935	CMAS038811935	0,37	0.81
							40		CMAS028811940	CMAS038811940	0,35	0.78
								1	CMAS0288119254	CMAS0388119254	0,39	0.86
								1 ¼	CMAS0288119317	CMAS0388119317	0,38	0.84
								1 ⅜	CMAS0288119349	CMAS0388119349	0,37	0.81
								1 7/16	CMAS0288119365	CMAS0388119365	0,36	0.80
								1 ½	CMAS0288119381	CMAS0388119381	0,32	0.71
21	129,26	5.089	129,40	5.094	68,03	2.678	25		CMAS028812125	CMAS038812125	0,47	1.03
							30		CMAS028812130	CMAS038812130	0,46	1.01
							35		CMAS028812135	CMAS038812135	0,45	0.98
							40		CMAS028812140	CMAS038812140	0,43	0.95
								1	CMAS0288121254	CMAS0388121254	0,47	1.03
								1 ¼	CMAS0288121317	CMAS0388121317	0,47	1.03
								1 ⅜	CMAS0288121349	CMAS0388121349	0,46	1.01
								1 7/16	CMAS0288121365	CMAS0388121365	0,45	0.98
								1 ½	CMAS0288121381	CMAS0388121381	0,44	0.96

*Diameter is indicated.
** Imperial round bore drive sprockets are supplied with setscrew. Metric round bore drive sprockets are supplied without setscrew.

Copyright Regina Catene Calibrate s.p.a. - 2020, All rights reserved

SUITABLE FOR CHAINS:
- **881 / 881T**
- **981 / 981T**
- **PHDG 981T**
- **982T**

MATERIALS		
SPROCKETS:	PA	POLYAMIDE
SCREWS:	SS	STAINLESS STEEL
NUTS:	B	BRASS

23T, 25T & 27T SPROCKETS
(for 17T, 19T & 21T see previous page)

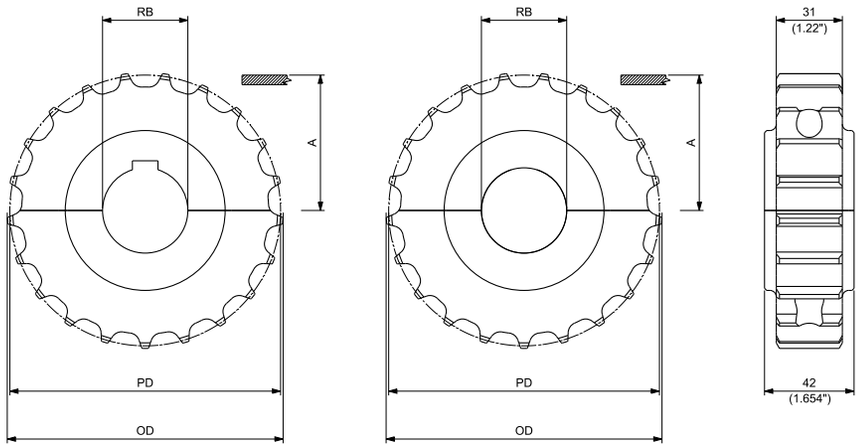

ROUND BORE - DRIVE

ROUND BORE - IDLER

MACHINED SPLIT IDLER WHEELS FOR 881/981 CHAINS
SEE PAGE 125

MACHINED SPLIT DRIVE AND IDLER SPROCKETS

N. TEETH	PITCH DIAMETER PD		OUTSIDE DIAMETER OD		WEAR STRIP POSITIONING A		BORE SIZE*		PART NUMBER ROUND BORE RB		WEIGHT	
	mm	inch	mm	inch	mm	inch	mm	inch**	DRIVE	IDLER	Kg	lbs
23	141,22	5.560	141,90	5.587	74,01	2.914	25		CMAS028812325	CMAS038812325	0,56	1.23
							30		CMAS028812330	CMAS038812330	0,55	1.21
							35		CMAS028812335	CMAS038812335	0,54	1.18
							40		CMAS028812340	CMAS038812340	0,52	1.15
								1	CMAS0288123254	CMAS0388123254	0,56	1.23
								1 ¼	CMAS0288123317	CMAS0388123317	0,56	1.23
								1 ⅜	CMAS0288123349	CMAS0388123349	0,55	1.21
								1 7/16	CMAS0288123365	CMAS0388123365	0,54	1.18
								1 ½	CMAS0288123381	CMAS0388123381	0,53	1.16
25	153,20	6.031	154,20	6.071	80,00	3.150	25		CMAS028812525	CMAS038812525	0,69	1.52
							30		CMAS028812530	CMAS038812530	0,68	1.50
							35		CMAS028812535	CMAS038812535	0,67	1.47
							40		CMAS028812540	CMAS038812540	0,65	1.44
								1	CMAS0288125254	CMAS0388125254	0,69	1.52
								1 ¼	CMAS0288125317	CMAS0388125317	0,69	1.52
								1 ⅜	CMAS0288125349	CMAS0388125349	0,68	1.50
								1 7/16	CMAS0288125365	CMAS0388125365	0,67	1.47
								1 ½	CMAS0288125381	CMAS0388125381	0,66	1.46
27	165,21	6.504	166,40	6.551	86,01	3.386	25		CMAS028812725	CMAS038812725	0,83	1.84
							30		CMAS028812730	CMAS038812730	0,82	1.81
							35		CMAS028812735	CMAS038812735	0,81	1.79
							40		CMAS028812740	CMAS038812740	0,80	1.75
								1	CMAS0288127254	CMAS0388127254	0,83	1.83
								1 ¼	CMAS0288127317	CMAS0388127317	0,83	1.83
								1 ⅜	CMAS0288127349	CMAS0388127349	0,82	1.81
								1 7/16	CMAS0288127365	CMAS0388127365	0,81	1.79
								1 ½	CMAS0288127381	CMAS0388127381	0,80	1.76

*Diameter is indicated.
** Imperial round bore drive sprockets are supplied with setscrew. Metric round bore drive sprockets are supplied without setscrew.

Copyright Regina Catene Calibrate s.p.a. - 2020, All rights reserved

SUITABLE FOR CHAINS:

- **PHD 9157**
- **PHDG 9157**
- **881T**
- **981T**
- **PHDG 981T**
- **PHD 9857M**
- **PHDG 9857M**
- **982T**

MATERIALS		
SPROCKETS:	PA	POLYAMIDE
SCREWS:	SS	STAINLESS STEEL
NUTS:	B	BRASS

17T,19T & 21T IDLER WHEELS

(for 23T & 25T see next page)

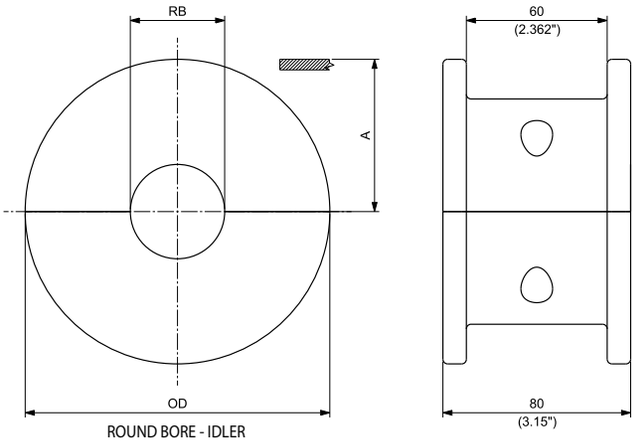

ROUND BORE - IDLER

MACHINED SPLIT IDLER WHEELS

N. TEETH	OUTSIDE DIAMETER OD mm	inch	WEAR STRIP POSITIONING A mm	inch	BORE SIZE* mm	inch	PART NUMBER ROUND BORE RB IDLER	WEIGHT Kg	lbs
17	106,50	4.193	53,25	2.096	25		**CMAS04881T1725**	0,44	0.97
					25		**CMAS04881T1730**	0,42	0.93
					35		**CMAS04881T1735**	0,39	0.86
					40		**CMAS04881T1740**	0,37	0.82
						1	**CMAS04881T17254**	0,44	0.97
						1 ¼	**CMAS04881T17317**	0,42	0.93
						1 ⅜	**CMAS04881T17349**	0,42	0.93
						1 7/16	**CMAS04881T17365**	0,39	0.86
						1 ½	**CMAS04881T17381**	0,38	0.84
19	118,00	4.646	59,00	2.323	25		**CMAS04881T1925**	0,58	1.28
					30		**CMAS04881T1930**	0,56	1.23
					35		**CMAS04881T1935**	0,54	1.19
					40		**CMAS04881T1940**	0,51	1.12
						1	**CMAS04881T19254**	0,58	1.28
						1 ¼	**CMAS04881T19317**	0,58	1.28
						1 ⅜	**CMAS04881T19349**	0,56	1.23
						1 7/16	**CMAS04881T19365**	0,54	1.19
						1 ½	**CMAS04881T19381**	0,54	1.19
21	129,80	5.110	64,90	2.555	25		**CMAS04881T2125**	0,79	1.73
					30		**CMAS04881T2130**	0,77	1.69
					35		**CMAS04881T2135**	0,74	1.64
					40		**CMAS04881T2140**	0,72	1.58
						1	**CMAS04881T21254**	0,78	1.73
						1 ¼	**CMAS04881T21317**	0,78	1.73
						1 ⅜	**CMAS04881T21349**	0,77	1.69
						1 7/16	**CMAS04881T21365**	0,74	1.64
						1 ½	**CMAS04881T21381**	0,73	1.60

*Diameter is indicated.

Copyright Regina Catene Calibrate s.p.a. - 2020, All rights reserved

SUITABLE FOR CHAINS:

- **PHD 9157**
- **PHDG 9157**
- **881T**
- **981T**
- **PHDG 981T**
- **PHD 9857M**
- **PHDG 9857M**
- **982T**

MATERIALS		
SPROCKETS:	PA	POLYAMIDE
SCREWS:	SS	STAINLESS STEEL
NUTS:	B	BRASS

23T & 25T IDLER WHEELS

(for 17T,19T & 21T see previous page)

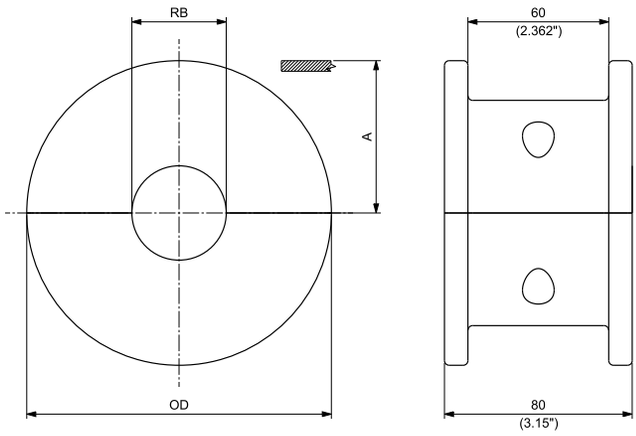

ROUND BORE - IDLER

MACHINED SPLIT IDLER WHEELS

N. TEETH	OUTSIDE DIAMETER OD mm	OUTSIDE DIAMETER OD inch	WEAR STRIP POSITIONING A mm	WEAR STRIP POSITIONING A inch	BORE SIZE* mm	BORE SIZE* inch	PART NUMBER ROUND BORE RB IDLER	WEIGHT Kg	WEIGHT lbs
					25		**CMAS04881T2325**	0,98	2.17
					30		**CMAS04881T2330**	0,96	2.13
					35		**CMAS04881T2335**	0,94	2.07
					40		**CMAS04881T2340**	0,91	2.01
23	142,30	5.602	71,15	2.801		1	**CMAS04881T23254**	0,98	2.17
						1 ¼	**CMAS04881T23317**	0,98	2.17
						1 ⅜	**CMAS04881T23349**	0,96	2.13
						1 7/16	**CMAS04881T23365**	0,94	2.07
						1 ½	**CMAS04881T23381**	0,92	2.04
					25		**CMAS04881T2525**	1,19	2.63
					30		**CMAS04881T2530**	1,17	2.58
					35		**CMAS04881T2535**	1,15	2.53
					40		**CMAS04881T2540**	1,12	2.47
25	154,70	6.091	77,35	3.045		1	**CMAS04881T25254**	1,19	2.62
						1 ¼	**CMAS04881T25317**	1,19	2.62
						1 ⅜	**CMAS04881T25349**	1,17	2.58
						1 7/16	**CMAS04881T25365**	1,15	2.53
						1 ½	**CMAS04881T25381**	1,13	2.50

*Diameter is indicated.

Copyright Regina Catene Calibrate s.p.a. - 2020, All rights reserved

SUITABLE FOR CHAINS:
- **820**
- **HFX 820**
- **831**

MATERIALS		
SPROCKETS:	PGF	REINFORCED POLYAMIDE
SCREWS:	SS	STAINLESS STEEL
NUTS:	B+NC	NICKEL PLATED BRASS

19T & 21T SPROCKETS
(for 23T & 25T see next page)

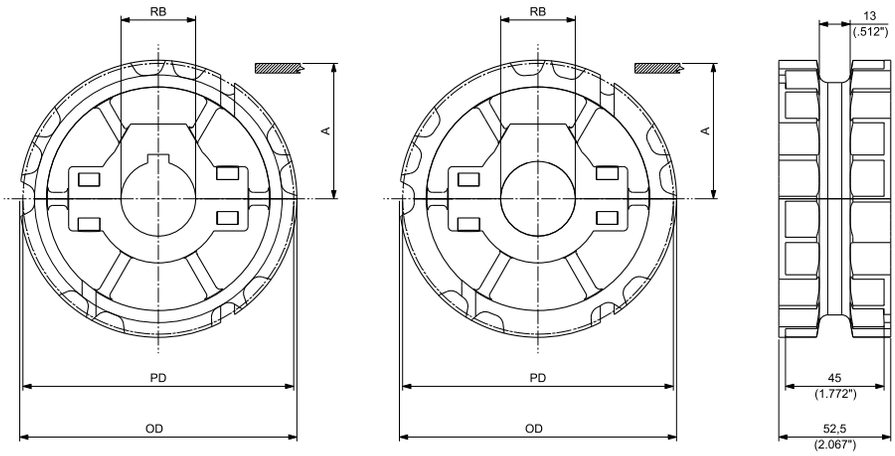

ROUND BORE - DRIVE

ROUND BORE - IDLER

MOULDED SPLIT IDLER WHEELS
SEE PAGE 124

MOULDED SOLID IDLER WHEELS
SEE PAGE 123

MOULDED SPLIT DRIVE AND IDLER SPROCKETS

N. TEETH	PITCH DIAMETER PD mm	PITCH DIAMETER PD inch	OUTSIDE DIAMETER OD mm	OUTSIDE DIAMETER OD inch	WEAR STRIP POSITIONING A mm	WEAR STRIP POSITIONING A inch	BORE SIZE* mm	BORE SIZE* inch**	PART NUMBER ROUND BORE RB DRIVE	PART NUMBER ROUND BORE RB IDLER	WEIGHT Kg	WEIGHT lbs
NEW 19	117,34	4.620	117,00	4.606	61,67	2.428	25		**CMT028201901**	**CMT038201901**	0,36	0.79
							30		**CMT028201902**	**CMT038201902**	0,35	0.77
							35		**CMT028201903**	**CMT038201903**	0,34	0.75
							40		**CMT028201904**	**CMT038201904**	0,33	0.73
							45		**CMT028201905**	**CMT038201905**	0,22	0.49
								1	CMT028201906	CMT038201906	0,36	0.79
								1 ¼	CMT028201908	CMT038201908	0,35	0.77
								1 ⅜	CMT028201911	CMT038201911	0,35	0.77
								1 7/16	CMT028201909	CMT038201909	0,34	0.75
								1 ½	CMT028201910	CMT038201910	0,33	0.73
21	129,30	5.091	130,00	5.118	68,05	2.679	25		**CMT028202101**	**CMT038202101**	0,48	1.05
							30		**CMT028202102**	**CMT038202102**	0,47	1.03
							35		**CMT028202103**	**CMT038202103**	0,46	1.01
							40		**CMT028202104**	**CMT038202104**	0,45	0.98
							45		**CMT028202105**	**CMT038202105**	0,43	0.95
								1	CMT028202106	CMT038202106	0,48	1.05
								1 ¼	CMT028202108	CMT038202108	0,46	1.02
								1 ⅜	CMT028202111	CMT038202111	0,46	1.02
								1 7/16	CMT028202109	CMT038202109	0,45	1.00
								1 ½	CMT028202110	CMT038202110	0,45	0.99

*Diameter is indicated.
** Imperial round bore drive sprockets are supplied with setscrew. Metric round bore drive sprockets are supplied without setscrew.

Copyright Regina Catene Calibrate s.p.a. - 2020, All rights reserved

SUITABLE FOR CHAINS:
- **820**
- **HFX 820**
- **831**

MATERIALS		
SPROCKETS:	PGF	REINFORCED POLYAMIDE
SCREWS:	SS	STAINLESS STEEL
NUTS:	B+NC	NICKEL PLATED BRASS

23T & 25T SPROCKETS
(for 19T & 21T see previous page)

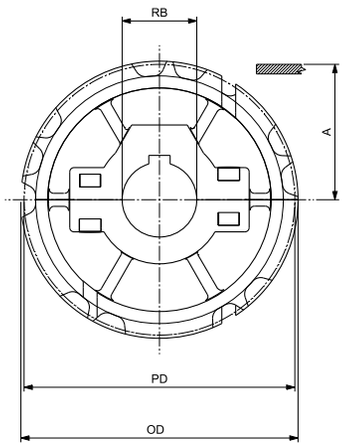

ROUND BORE - DRIVE

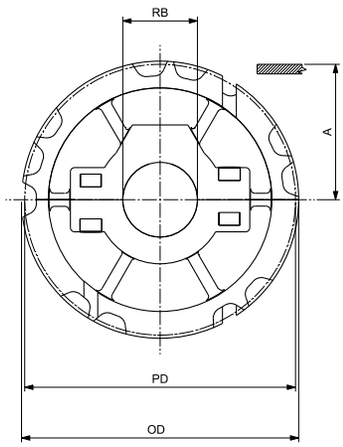

ROUND BORE - IDLER

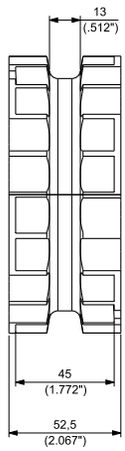

MOULDED SPLIT IDLER WHEELS
SEE PAGE 124

MOULDED SOLID IDLER WHEELS
SEE PAGE 123

MOULDED SPLIT DRIVE AND IDLER SPROCKETS

N. TEETH	PITCH DIAMETER PD		OUTSIDE DIAMETER OD		WEAR STRIP POSITIONING A		BORE SIZE*		PART NUMBER ROUND BORE RB		WEIGHT	
	mm	inch	mm	inch	mm	inch	mm	inch**	DRIVE	IDLER	Kg	lbs
23	141,20	5.559	141,90	5.587	74,00	2.913	25		**CMT028202301**	**CMT038202301**	0,52	1.15
							30		**CMT028202302**	**CMT038202302**	0,51	1.13
							35		**CMT028202303**	**CMT038202303**	0,50	1.11
							40		**CMT028202304**	**CMT038202304**	0,49	1.08
							45		**CMT028202305**	**CMT038202305**	0,48	1.05
								1	**CMT028202306**	**CMT038202306**	0,52	1.15
								1 ¼	**CMT028202308**	**CMT038202308**	0,51	1.13
								1 ⅜	**CMT028202311**	**CMT038202311**	0,51	1.13
								1 7/16	**CMT028202309**	**CMT038202309**	0,50	1.10
								1 ½	**CMT028202310**	**CMT038202310**	0,50	1.09
25	153,20	6.031	154,20	6.071	80,00	3.150	25		**CMT028202501**	**CMT038202501**	0,57	1.26
							30		**CMT028202502**	**CMT038202502**	0,56	1.24
							35		**CMT028202503**	**CMT038202503**	0,55	1.22
							40		**CMT028202504**	**CMT038202504**	0,54	1.19
							45		**CMT028202505**	**CMT038202505**	0,53	1.16
								1	**CMT028202506**	**CMT038202506**	0,57	1.26
								1 ¼	**CMT028202508**	**CMT038202508**	0,56	1.23
								1 ⅜	**CMT028202511**	**CMT038202511**	0,56	1.23
								1 7/16	**CMT028202509**	**CMT038202509**	0,55	1.21
								1 ½	**CMT028202510**	**CMT038202510**	0,55	1.20

*Diameter is indicated.
** Imperial round bore drive sprockets are supplied with setscrew. Metric round bore drive sprockets are supplied without setscrew.

Copyright Regina Catene Calibrate s.p.a. - 2020, All rights reserved

SUITABLE FOR CHAINS:
- **820**
- **HFX 820**
- **831**

MATERIALS		
SPROCKETS:	PA	POLYAMIDE
SCREWS:	SS	STAINLESS STEEL
NUTS:	B	BRASS

17T, 19T & 21T SPROCKETS
(for 23T, 25T & 27T see next page)

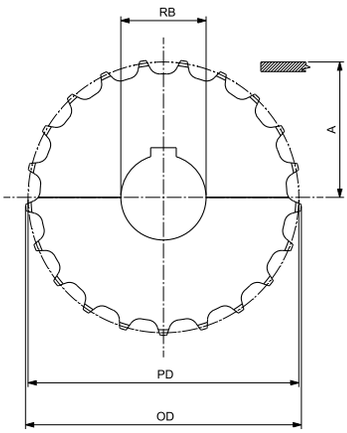

ROUND BORE - DRIVE

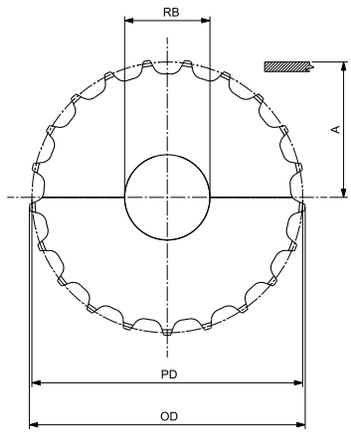

ROUND BORE - IDLER

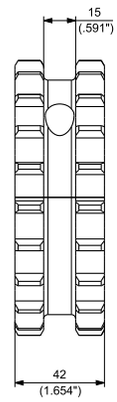

MACHINED SPLIT IDLER WHEELS
SEE PAGE 125

MACHINED SPLIT DRIVE AND IDLER SPROCKETS

N. TEETH	PITCH DIAMETER PD mm	PD inch	OUTSIDE DIAMETER OD mm	OD inch	WEAR STRIP POSITIONING A mm	A inch	BORE SIZE* mm	BORE SIZE* inch**	PART NUMBER ROUND BORE RB DRIVE	PART NUMBER ROUND BORE RB IDLER	WEIGHT Kg	WEIGHT lbs
17	105,47	4.152	104,40	4.110	55,94	2.202	25		CMAS028201725	CMAS038201725	0,34	0.75
							30		CMAS028201730	CMAS038201730	0,34	0.73
							35		CMAS028201735	CMAS038201735	0,32	0.70
							40		CMAS028201740	CMAS038201740	0,30	0.67
								1	CMAS0282017254	CMAS0382017254	0,34	0.75
								1 1/4	CMAS0282017317	CMAS0382017317	0,33	0.72
								1 3/8	CMAS0282017349	CMAS0382017349	0,33	0.72
								1 7/16	CMAS0282017365	CMAS0382017365	0,32	0.70
								1 1/2	CMAS0282017381	CMAS0382017381	0,31	0.68
19	117,34	4.620	117,00	4.606	61,87	2.436	25		CMAS028201925	CMAS038201925	0,43	0.94
							30		CMAS028201930	CMAS038201930	0,42	0.92
							35		CMAS028201935	CMAS038201935	0,40	0.89
							40		CMAS028201940	CMAS038201940	0,39	0.86
								1	CMAS0282019254	CMAS0382019254	0,43	0.94
								1 1/4	CMAS0282019317	CMAS0382019317	0,43	0.94
								1 3/8	CMAS0282019349	CMAS0382019349	0,42	0.92
								1 7/16	CMAS0282019365	CMAS0382019365	0,40	0.88
								1 1/2	CMAS0282019381	CMAS0382019381	0,36	0.79
21	129,26	5.089	129,40	5.094	68,83	2.710	25		CMAS028202125	CMAS038202125	0,53	1.16
							30		CMAS028202130	CMAS038202130	0,52	1.14
							35		CMAS028202135	CMAS038202135	0,51	1.11
							40		CMAS028202140	CMAS038202140	0,49	1.08
								1	CMAS0282021254	CMAS0382021254	0,53	1.16
								1 1/4	CMAS0282021317	CMAS0382021317	0,53	1.16
								1 3/8	CMAS0282021349	CMAS0382021349	0,52	1.14
								1 7/16	CMAS0282021365	CMAS0382021365	0,51	1.11
								1 1/2	CMAS0282021381	CMAS0382021381	0,50	1.10

*Diameter is indicated.
** Imperial round bore drive sprockets are supplied with setscrew. Metric round bore drive sprockets are supplied without setscrew.

Copyright Regina Catene Calibrate s.p.a. - 2020, All rights reserved

SUITABLE FOR CHAINS:
- **820**
- **HFX 820**
- **831**

MATERIALS		
SPROCKETS:	PA	POLYAMIDE
SCREWS:	SS	STAINLESS STEEL
NUTS:	B	BRASS

23T, 25T & 27T SPROCKETS
(for 17T, 19T & 21T see previous page)

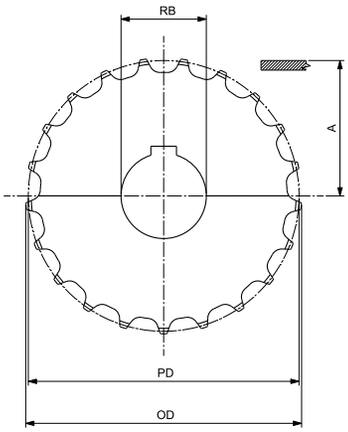

ROUND BORE - DRIVE

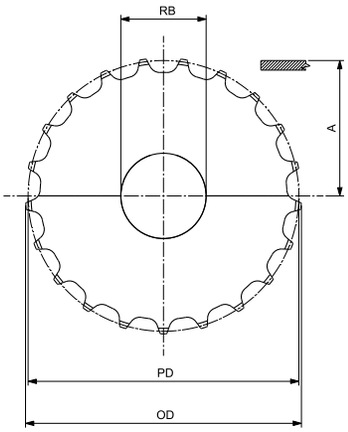

ROUND BORE - IDLER

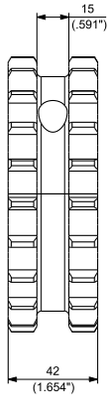

MACHINED SPLIT IDLER WHEELS
SEE PAGE 125

MACHINED SPLIT DRIVE AND IDLER SPROCKETS

N. TEETH	PITCH DIAMETER PD		OUTSIDE DIAMETER OD		WEAR STRIP POSITIONING A		BORE SIZE*		PART NUMBER ROUND BORE RB		WEIGHT	
	mm	inch	mm	inch	mm	inch	mm	inch**	DRIVE	IDLER	Kg	lbs
23	141,22	5.560	141,90	5.587	73,81	2.906	25		CMAS028202325	CMAS038202325	0,63	1.39
							30		CMAS028202330	CMAS038202330	0,62	1.37
							35		CMAS028202335	CMAS038202335	0,61	1.34
							40		CMAS028202340	CMAS038202340	0,59	1.31
								1	CMAS0282023254	CMAS0382023254	0,63	1.39
								1 ¼	CMAS0282023317	CMAS0382023317	0,63	1.39
								1 ⅜	CMAS0282023349	CMAS0382023349	0,62	1.37
								1 7/16	CMAS0282023365	CMAS0382023365	0,61	1.34
								1 ½	CMAS0282023381	CMAS0382023381	0,60	1.32
25	153,20	6.031	154,20	6.071	79,80	3.142	25		CMAS028202525	CMAS038202525	0,78	1.72
							30		CMAS028202530	CMAS038202530	0,77	1.69
							35		CMAS028202535	CMAS038202535	0,76	1.67
							40		CMAS028202540	CMAS038202540	0,74	1.63
								1	CMAS0282025254	CMAS0382025254	0,78	1.71
								1 ¼	CMAS0282025317	CMAS0382025317	0,78	1.71
								1 ⅜	CMAS0282025349	CMAS0382025349	0,77	1.69
								1 7/16	CMAS0282025365	CMAS0382025365	0,76	1.67
								1 ½	CMAS0282025381	CMAS0382025381	0,75	1.65
27	165,21	6.504	166,40	6.551	85,81	3.378	25		CMAS028202725	CMAS038202725	0,92	2.02
							30		CMAS028202730	CMAS038202730	0,91	2.03
							35		CMAS028202735	CMAS038202735	0,90	1.97
							40		CMAS028202740	CMAS038202740	0,88	1.94
								1	CMAS0282027254	CMAS0382027254	0,92	2.03
								1 ¼	CMAS0282027317	CMAS0382027317	0,92	2.03
								1 ⅜	CMAS0282027349	CMAS0382027349	0,91	2.03
								1 7/16	CMAS0282027365	CMAS0382027365	0,90	1.97
								1 ½	CMAS0282027381	CMAS0382027381	0,88	1.94

*Diameter is indicated.
** Imperial round bore drive sprockets are supplied with setscrew. Metric round bore drive sprockets are supplied without setscrew.

Copyright Regina Catene Calibrate s.p.a. - 2020, All rights reserved

SUITABLE FOR CHAINS:

- **821**
- **HFX 821**
- **LBP 821**

MATERIALS		
SPROCKETS:	PGF	REINFORCED POLYAMIDE
SCREWS:	SS	STAINLESS STEEL
NUTS:	B+NC	NICKEL PLATED BRASS

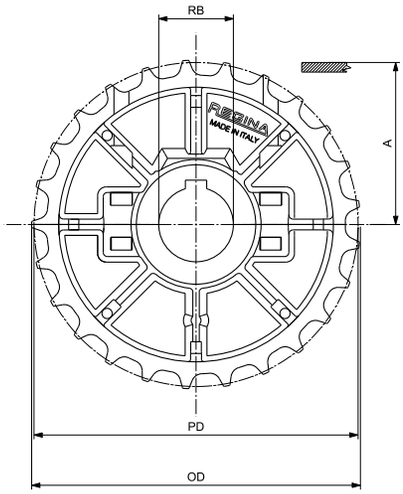

ROUND BORE - DRIVE

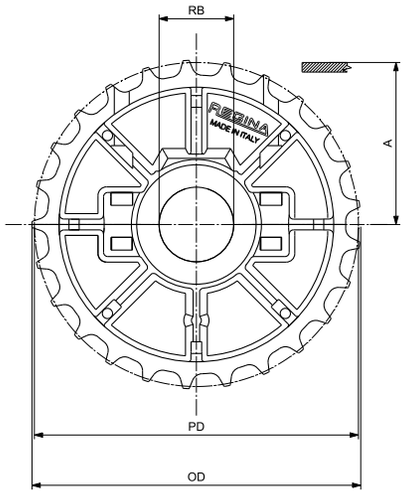

ROUND BORE - IDLER

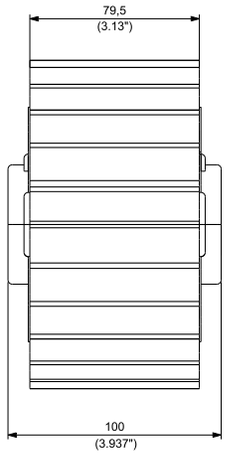

MOULDED SPLIT DRIVE AND IDLER SPROCKETS

N. TEETH	PITCH DIAMETER PD		OUTSIDE DIAMETER OD		WEAR STRIP POSITIONING A		BORE SIZE*		PART NUMBER ROUND BORE RB		WEIGHT	
	mm	inch	mm	inch	mm	inch	mm	inch**	DRIVE	IDLER	Kg	lbs
25	153,20	6.031	154,20	6.071	79,8	3.142	30		**CMT028212502**	**CMT038212502**	0,98	2.17
							35		**CMT028212503**	**CMT038212503**	0,97	2.13
							40		**CMT028212504**	**CMT038212504**	0,94	2.08
							45		**CMT028212505**	**CMT038212505**	0,91	2.02
								1 ¼	**CMT028212508**	**CMT038212508**	0,98	2.16
								1 ⅜	**CMT028212511**	**CMT038212511**	0,97	2.13
								1 7⁄16	**CMT028212509**	**CMT038212509**	0,96	2.11
								1 ½	**CMT028212510**	**CMT038212510**	0,95	2.10

*Diameter is indicated.
** Imperial round bore drive sprockets are supplied with setscrew. Metric round bore drive sprockets are supplied without setscrew.

Copyright Regina Catene Calibrate s.p.a. - 2020, All rights reserved

SUITABLE FOR CHAINS:
- **821**
- **HFX 821**
- **LBP 821**

MATERIALS		
SPROCKETS:	PA	POLYAMIDE
SCREWS:	SS	STAINLESS STEEL
NUTS:	B	BRASS

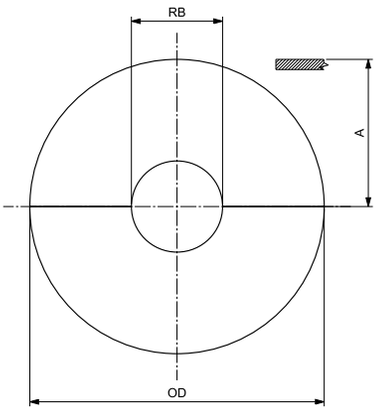

ROUND BORE - IDLER

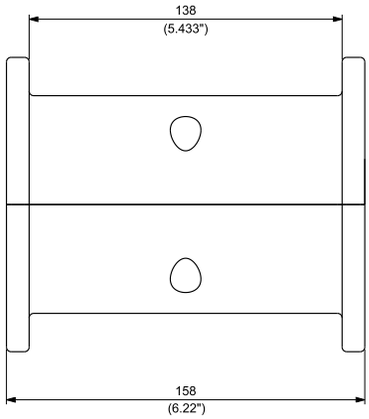

MACHINED SPLIT SPROCKETS
SEE PAGE 128

MACHINED SPLIT IDLER WHEELS

N. TEETH	OUTSIDE DIAMETER OD mm	inch	WEAR STRIP POSITIONING A mm	inch	BORE SIZE* mm	inch	PART NUMBER ROUND BORE RB IDLER	WEIGHT Kg	lbs
					25		**CMAS048211925**	1,07	2,36
					30		**CMAS048211930**	1,03	2,27
					35		**CMAS048211935**	0,98	2,17
					40		**CMAS048211940**	0,93	2,05
19	118,00	4.646	59,00	2.323		1	CMAS0482119254	1,07	2,35
						1 ¼	CMAS0482119317	1,03	2,27
						1 ⅜	CMAS0482119349	0,98	2,17
						1 7/16	CMAS0482119365	0,97	2,13
						1 ½	CMAS0482119381	0,88	1.93
					25		**CMAS048212125**	1,39	3.05
					30		**CMAS048212130**	1,35	2.97
					35		**CMAS048212135**	1,30	2.87
					40		**CMAS048212140**	1,25	2.75
21	129,80	5.110	64,90	2.555		1	CMAS0482121254	1,38	3.05
						1 ¼	CMAS0482121317	1,38	3.05
						1 ⅜	CMAS0482121349	1,35	2.97
						1 7/16	CMAS0482121365	1,30	2.87
						1 ½	CMAS0482121381	1,27	2.79
					25		**CMAS048212325**	1,75	3.87
					30		**CMAS048212330**	1,72	3.78
					35		**CMAS048212335**	1,67	3.68
					40		**CMAS048212340**	1,62	3.56
23	142,30	5.602	71,15	2.801		1	CMAS0482123254	1,75	3.86
						1 ¼	CMAS0482123317	1,75	3.86
						1 ⅜	CMAS0482123349	1,72	3.78
						1 7/16	CMAS0482123365	1,67	3.68
						1 ½	CMAS0482123381	1,64	3.61
					25		**CMAS048212525**	2,16	4.75
					30		**CMAS048212530**	2,12	4.67
					35		**CMAS048212535**	2,07	4.56
					40		**CMAS048212540**	2,02	4.45
25	154,70	6.091	77,35	3.045		1	CMAS0482125254	2,15	4.75
						1 ¼	CMAS0482125317	2,15	4.75
						1 ⅜	CMAS0482125349	2,12	4.67
						1 7/16	CMAS0482125365	2,07	4.56
						1 ½	CMAS0482125381	2,04	4.49

*Diameter is indicated.

Copyright Regina Catene Calibrate s.p.a. - 2020, All rights reserved

SUITABLE FOR CHAINS:

- **828**
- **880 / 880T / 880TA / 880M RG**
- **HFX 880T**
- **879 / 879T**
- **878T**
- **EW 878T / GW 878T GD 878T/ GU 878T**

MATERIALS		
SPROCKETS:	PGF	REINFORCED POLYAMIDE
SCREWS:	SS	STAINLESS STEEL
NUTS:	B+NC	NICKEL PLATED BRASS

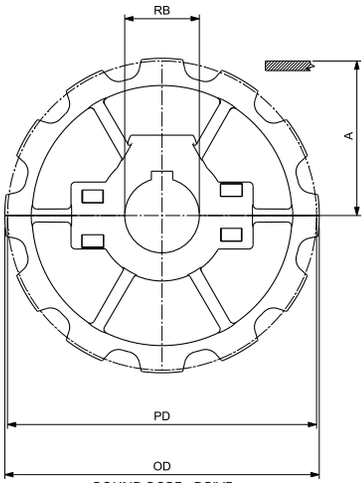

ROUND BORE - DRIVE

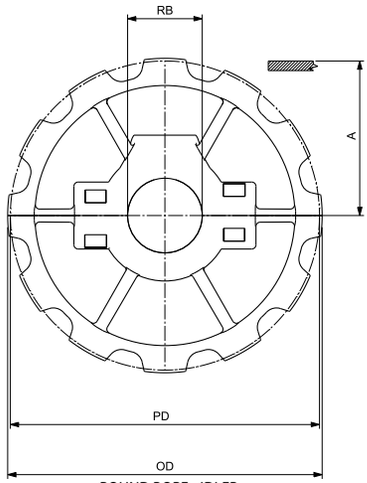

ROUND BORE - IDLER

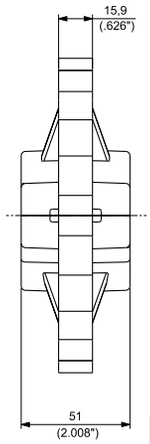

MOULDED SPLIT IDLER WHEELS FOR 880 / 880M RG / 879 CHAINS
SEE PAGE 124

MOULDED SOLID IDLER WHEELS FOR 880 / 880M RG / 879 CHAINS
SEE PAGE 123

MOULDED SPLIT DRIVE AND IDLER SPROCKETS

N. TEETH	PITCH DIAMETER PD		OUTSIDE DIAMETER OD		WEAR STRIP POSITIONING A		BORE SIZE*		PART NUMBER ROUND BORE RB		WEIGHT	
	mm	inch	mm	inch	mm	inch	mm	inch**	DRIVE	IDLER	Kg	lbs
NEW 10	123,29	4.854	124,50	4.902	65,25	2.569	25		CMT028801001	CMT038801001	0,31	0.68
							30		CMT028801002	CMT038801002	0,30	0.66
							35		CMT028801003	CMT038801003	0,29	0.64
							40		CMT028801004	CMT038801004	0,28	0.62
								1	CMT028801006	CMT038801006	0,31	0.67
								1 ¼	CMT028801008	CMT038801008	0,30	0.65
								1 ⅜	CMT028801011	CMT038801011	0,30	0.65
								1 7/16	CMT028801009	CMT038801009	0,29	0.64
								1 ½	CMT028801010	CMT038801010	0,29	0.64
12	147,21	5.796	147,30	5.799	77,21	3.040	25		CMT028801201	CMT038801201	0,42	0.93
							30		CMT028801202	CMT038801202	0,41	0.91
							35		CMT028801203	CMT038801203	0,40	0.88
							40		CMT028801204	CMT038801204	0,39	0.86
							45		CMT028801205	CMT038801205	0,37	0.82
								1	CMT028801206	CMT038801206	0,41	0.91
								1 ¼	CMT028801208	CMT038801208	0,41	0.90
								1 ⅜	CMT028801211	CMT038801211	0,40	0.88
								1 7/16	CMT028801209	CMT038801209	0,40	0.88
								1 ½	CMT028801210	CMT038801210	0,39	0.87

*Diameter is indicated.
** Imperial round bore drive sprockets are supplied with setscrew. Metric round bore drive sprockets are supplied without setscrew.

Copyright Regina Catene Calibrate s.p.a. - 2020, All rights reserved

SUITABLE FOR CHAINS:

- **828**
- **880 / 880T / 880TA / 880M RG**
- **HFX 880T**
- **879 / 879T**
- **878T**
- **EW 878T / GW 878T GD 878T/ GU 878T**

MATERIALS		
SPROCKETS:	PA	POLYAMIDE
SCREWS:	SS	STAINLESS STEEL
NUTS:	B	BRASS

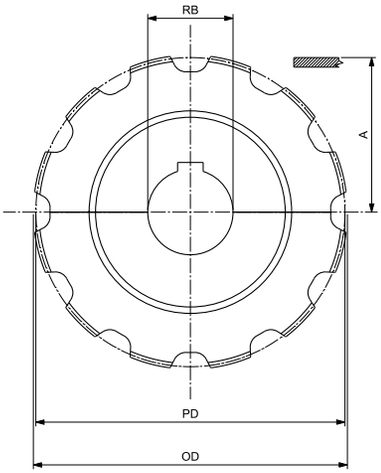

ROUND BORE - DRIVE

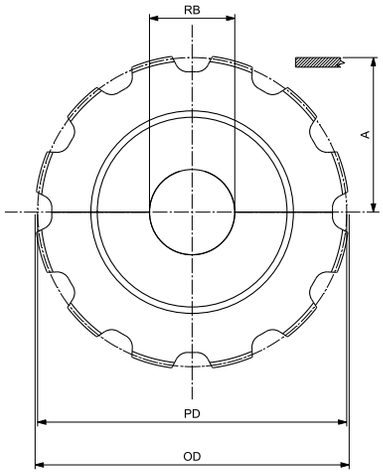

ROUND BORE - IDLER

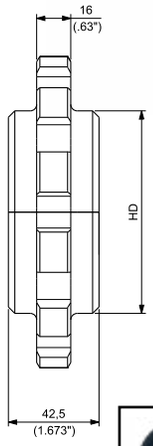

MACHINED SPLIT IDLER WHEELS FOR 880 / 880M RG / 879 CHAINS

SEE PAGE 125

MACHINED SPLIT DRIVE AND IDLER SPROCKETS

N. TEETH	PITCH DIAMETER PD		OUTSIDE DIAMETER OD		WEAR STRIP POSITIONING A		HD		BORE SIZE*		PART NUMBER ROUND BORE RB		WEIGHT	
	mm	inch	mm	inch	mm	inch	mm	inch	mm	inch**	DRIVE	IDLER	Kg	lbs
9	111,40	4.386	109,80	4.323	59,30	2.335	75	2.95	25		CMAS028800925	CMAS038800925	0,30	0.66
									30		CMAS028800930	CMAS038800930	0,29	0.64
									35		CMAS028800935	CMAS038800935	0,28	0.61
									40		CMAS028800940	CMAS038800940	0,26	0.58
										1	CMAS0288009254	CMAS0388009254	0,30	0.66
										1 ¼	CMAS0288009317	CMAS0388009317	0,29	0.64
										1 ½	CMAS0288009381	CMAS0388009381	0,28	0.61
10	123,29	4.854	124,50	4.902	65,55	2.581	85	3.35	25		CMAS028801025	CMAS038801025	0,38	0.83
									30		CMAS028801030	CMAS038801030	0,37	0.81
									35		CMAS028801035	CMAS038801035	0,35	0.78
									40		CMAS028801040	CMAS038801040	0,34	0.75
										1	CMAS0288010254	CMAS0388010254	0,38	0.83
										1 ¼	CMAS0288010317	CMAS0388010317	0,37	0.81
										1 ½	CMAS0288010381	CMAS0388010381	0,35	0.76
11	135,24	5.324	134,90	5.311	71,22	2.804	90	3.54	25		CMAS028801125	CMAS038801125	0,43	0.95
									30		CMAS028801130	CMAS038801130	0,42	0.93
									35		CMAS028801135	CMAS038801135	0,41	0.90
									40		CMAS028801140	CMAS038801140	0,40	0.87
										1	CMAS0288011254	CMAS0388011254	0,43	0.95
										1 ¼	CMAS0288011317	CMAS0388011317	0,41	0.90
										1 ½	CMAS0288011381	CMAS0388011381	0,40	0.88
12	147,21	5.796	147,30	5.799	77,21	3.040	95	3.74	25		CMAS028801225	CMAS038801225	0,53	1.17
									30		CMAS028801230	CMAS038801230	0,52	1.14
									35		CMAS028801235	CMAS038801235	0,51	1.12
									40		CMAS028801240	CMAS038801240	0,49	1.09
										1	CMAS0288012254	CMAS0388012254	0,53	1.17
										1 ¼	CMAS0288012317	CMAS0388012317	0,51	1.12
										1 ½	CMAS0288012381	CMAS0388012381	0,50	1.10

*Diameter is indicated.
** Imperial round bore drive sprockets are supplied with setscrew. Metric round bore drive sprockets are supplied without setscrew.

Copyright Regina Catene Calibrate s.p.a. - 2020, All rights reserved

SUITABLE FOR CHAINS:

- **880T / HFX 880T / 880TA**
- **879T**
- **878T**
- **EW 878T / GW 878T / GU 878T / GD 878T**

MATERIALS		
SPROCKETS:	PA	POLYAMIDE
SCREWS:	SS	STAINLESS STEEL
NUTS:	B	BRASS

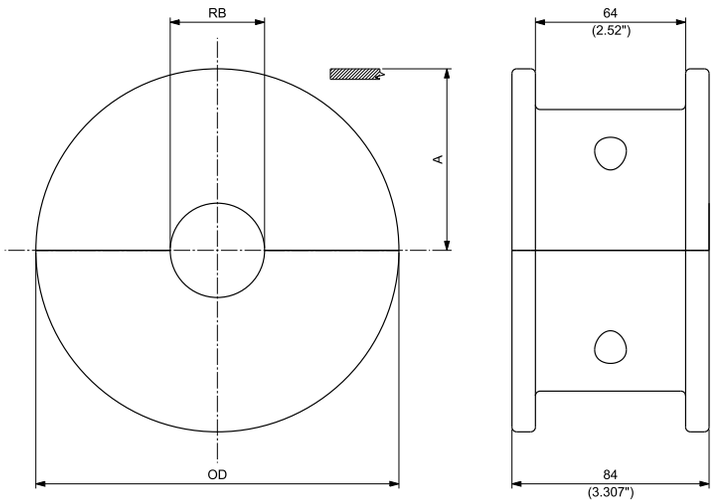

ROUND BORE - IDLER

MACHINED SPLIT IDLER WHEELS

N. TEETH	OUTSIDE DIAMETER OD mm	inch	WEAR STRIP POSITIONING A mm	inch	BORE SIZE* mm	inch	PART NUMBER ROUND BORE RB IDLER	WEIGHT Kg	lbs
9	118,00	4.646	59,00	2.323	25		**CMAS04880T0925**	0,64	1.41
					30		**CMAS04880T0930**	0,62	1.36
					35		**CMAS04880T0935**	0,59	1.31
					40		**CMAS04880T0940**	0,57	1.25
						1	**CMAS04880T09254**	0,64	1.41
						1 ¼	**CMAS04880T09317**	0,62	1.36
						1 ½	**CMAS04880T09381**	0,59	1.31
10	129,80	5.110	64,90	2.555	25		**CMAS04880T1025**	0,82	1.80
					30		**CMAS04880T1030**	0,80	1.75
					35		**CMAS04880T1035**	0,77	1.70
					40		**CMAS04880T1040**	0,74	1.64
						1	**CMAS04880T10254**	0,82	1.80
						1 ¼	**CMAS04880T10317**	0,77	1.70
						1 ½	**CMAS04880T10381**	0,75	1.66
11	142,30	5.602	71,15	2.801	25		**CMAS04880T1125**	1,02	2.25
					30		**CMAS04880T1130**	1,00	2.20
					35		**CMAS04880T1135**	0,98	2.15
					40		**CMAS04880T1140**	0,95	2.09
						1	**CMAS04880T11254**	1,02	2.25
						1 ¼	**CMAS04880T11317**	0,98	2.15
						1 ½	**CMAS04880T11381**	0,96	2.11
12	154,70	6.091	77,35	3.045	25		**CMAS04880T1225**	1,24	2.74
					30		**CMAS04880T1230**	1,22	2.69
					35		**CMAS04880T1235**	1,20	2.64
					40		**CMAS04880T1240**	1,17	2.57
						1	**CMAS04880T12254**	1,24	2.73
						1 ¼	**CMAS04880T12317**	1,20	2.64
						1 ½	**CMAS04880T12381**	1,18	2.60

*Diameter is indicated.

Copyright Regina Catene Calibrate s.p.a. - 2020, All rights reserved

SUITABLE FOR CHAINS:

- **8257**
- **HFX 8257**
- **LBP 8257**
- **882 / 882T / 882M**
- **HFX 882T / HFX 882M**
- **LBP 882T / LBP 882M**

MATERIALS		
SPROCKETS:	PGF	REINFORCED POLYAMIDE
SCREWS:	SS	STAINLESS STEEL
NUTS:	B+NC	NICKEL PLATED BRASS

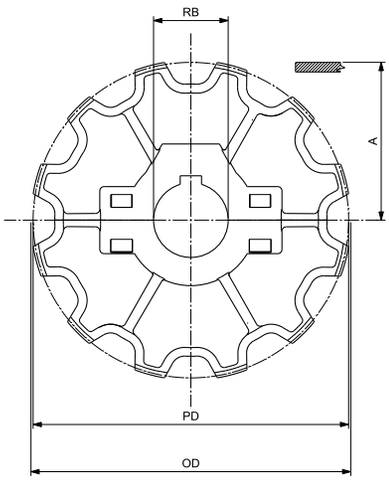

ROUND BORE - DRIVE

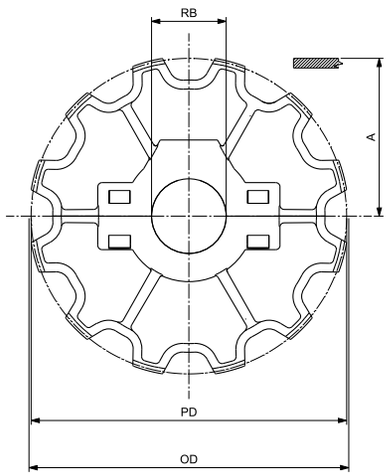

ROUND BORE - IDLER

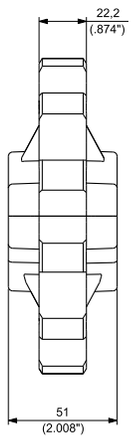

MOULDED SPLIT DRIVE AND IDLER SPROCKETS

N. TEETH	PITCH DIAMETER PD		OUTSIDE DIAMETER OD		WEAR STRIP POSITIONING A		BORE SIZE*		PART NUMBER ROUND BORE RB		WEIGHT	
	mm	inch	mm	inch	mm	inch	mm	inch**	DRIVE	IDLER	Kg	lbs
NEW 10	123,29	4.854	124,50	4.902	66,35	2.612	25		**CMT028821001**	**CMT038821001**	0,30	0.65
							30		**CMT028821002**	**CMT038821002**	0,29	0.64
							35		**CMT028821003**	**CMT038821003**	0,28	0.62
							40		**CMT028821004**	**CMT038821004**	0,27	0.60
								1	**CMT028821006**	**CMT038821006**	0,30	0.65
								1 ¼	**CMT028821008**	**CMT038821008**	0,30	0.65
								1 ⅜	**CMT028821011**	**CMT038821011**	0,29	0.64
								1 7/16	**CMT028821009**	**CMT038821009**	0,28	0.62
								1 ½	**CMT028821010**	**CMT038821010**	0,27	0.60
12	147,21	5.796	150,00	5.906	78,31	3.083	25		**CMT028821201**	**CMT038821201**	0,40	0.88
							30		**CMT028821202**	**CMT038821202**	0,39	0.86
							35		**CMT028821203**	**CMT038821203**	0,38	0.83
							40		**CMT028821204**	**CMT038821204**	0,37	0.81
							45		**CMT028821205**	**CMT038821205**	0,35	0.78
								1	**CMT028821206**	**CMT038821206**	0,39	0.86
								1 ¼	**CMT028821208**	**CMT038821208**	0,39	0.85
								1 ⅜	**CMT028821211**	**CMT038821211**	0,38	0.83
								1 7/16	**CMT028821209**	**CMT038821209**	0,37	0.81
								1 ½	**CMT028821210**	**CMT038821210**	0,35	0.78

*Diameter is indicated.
** Imperial round bore drive sprockets are supplied with setscrew. Metric round bore drive sprockets are supplied without setscrew.

Copyright Regina Catene Calibrate s.p.a. - 2020, All rights reserved

SPROCKETS - **882 SERIES**

SUITABLE FOR CHAINS:

- **8257**
- **HFX 8257**
- **LBP 8257**
- **882 / 882T / 882M**
- **HFX 882T / HFX 882M**
- **LBP 882T / LBP 882M**

MATERIALS		
SPROCKETS:	PA	POLYAMIDE
SCREWS:	SS	STAINLESS STEEL
NUTS:	B	BRASS

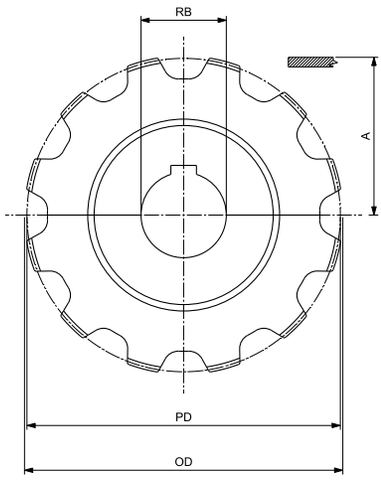

ROUND BORE - DRIVE

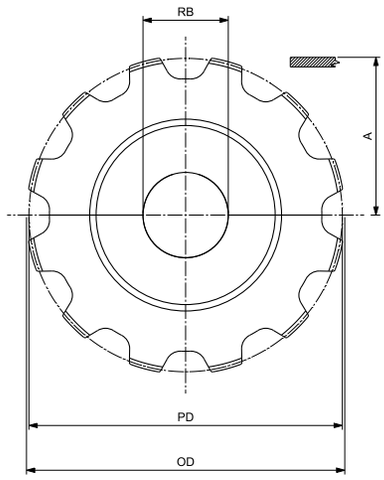

ROUND BORE - IDLER

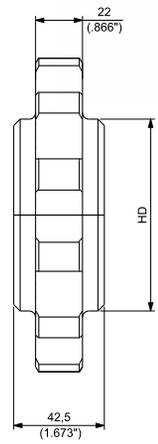

MACHINED SPLIT DRIVE AND IDLER SPROCKETS

N. TEETH	PITCH DIAMETER PD		OUTSIDE DIAMETER OD		WEAR STRIP POSITIONING A		HD		BORE SIZE*		PART NUMBER ROUND BORE RB		WEIGHT	
	mm	inch	mm	inch	mm	inch	mm	inch	mm	inch**	DRIVE	IDLER	Kg	lbs
9	111,40	4.386	109,80	4.323	60,40	2.378	60	2.36	25		CMAS028820925	CMAS038820925	0,28	0.62
									30		CMAS028820930	CMAS038820930	0,27	0.60
									35		CMAS028820935	CMAS038820935	0,26	0.57
									40		CMAS028820940	CMAS038820940	0,25	0.54
										1	CMAS0288209254	CMAS0388209254	0,28	0.62
										1 ¼	CMAS0288209317	CMAS0388209317	0,27	0.59
										1 ½	CMAS0288209381	CMAS0388209381	0,25	0.55
10	123,29	4.878	122,40	4.819	66,65	2.624	75	2.95	25		CMAS028821025	CMAS038821025	0,37	0.82
									30		CMAS028821030	CMAS038821030	0,36	0.80
									35		CMAS028821035	CMAS038821035	0,35	0.77
									40		CMAS028821040	CMAS038821040	0,34	0.74
										1	CMAS0288210254	CMAS0388210254	0,37	0.82
										1 ¼	CMAS0288210317	CMAS0388210317	0,35	0.76
										1 ½	CMAS0288210381	CMAS0388210381	0,30	0.67
11	135,24	5.324	134,90	5.311	72,32	2.874	85	3.35	25		CMAS028821125	CMAS038821125	0,45	1.00
									30		CMAS028821130	CMAS038821130	0,44	0.98
									35		CMAS028821135	CMAS038821135	0,43	0.95
									40		CMAS028821140	CMAS038821140	0,42	0.92
										1	CMAS0288211254	CMAS0388211254	0,45	1.00
										1 ¼	CMAS0288211317	CMAS0388211317	0,43	0.95
										1 ½	CMAS0288211381	CMAS0388211381	0,42	0.93
12	147,21	5.796	147,30	5.799	78,31	3.083	90	3.54	25		CMAS028821225	CMAS038821225	0,56	1.24
									30		CMAS028821230	CMAS038821230	0,55	1.21
									35		CMAS028821235	CMAS038821235	0,54	1.18
									40		CMAS028821240	CMAS038821240	0,52	1.15
										1	CMAS0288212254	CMAS0388212254	0,56	1.23
										1 ¼	CMAS0288212317	CMAS0388212317	0,54	1.18
										1 ½	CMAS0288212381	CMAS0388212381	0,53	1.17

*Diameter is indicated.
** Imperial round bore drive sprockets are supplied with setscrew. Metric round bore drive sprockets are supplied without setscrew.

Copyright Regina Catene Calibrate s.p.a. - 2020, All rights reserved

SUITABLE FOR CHAINS:
- **882T**
- **HFX 882T**
- **LBP 882T**

MATERIALS		
SPROCKETS:	PA	POLYAMIDE
SCREWS:	SS	STAINLESS STEEL
NUTS:	B	BRASS

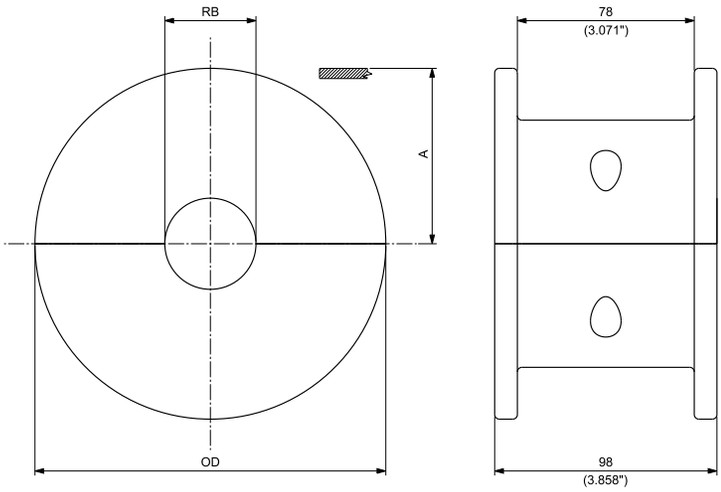

ROUND BORE - IDLER

MACHINED SPLIT IDLER WHEELS

N. TEETH	OUTSIDE DIAMETER OD mm	inch	WEAR STRIP POSITIONING A mm	inch	BORE SIZE* mm	inch	PART NUMBER ROUND BORE RB IDLER	WEIGHT Kg	lbs
9	118,00	4.646	59,00	2.323	25		**CMAS04882T0925**	0,59	1.30
					30		**CMAS04882T0930**	0,57	1.25
					35		**CMAS04882T0935**	0,54	1.18
					40		**CMAS04882T0940**	0,50	1.11
						1	**CMAS04882T09254**	0,59	1.30
						1 ¼	**CMAS04882T09317**	0,56	1.23
						1 ½	**CMAS04882T09381**	0,52	1.14
10	129,80	5.110	64,90	2.555	25		**CMAS04882T1025**	0,79	1.74
					30		**CMAS04882T1030**	0,76	1.67
					35		**CMAS04882T1045**	0,73	1.60
					40		**CMAS04882T1040**	0,69	1.53
						1	**CMAS04882T10254**	0,78	1.72
						1 ¼	**CMAS04882T10317**	0,72	1.58
						1 ½	**CMAS04882T10381**	0,62	1.37
11	142,30	5.602	71,15	2.801	25		**CMAS04882T1125**	0,98	2.17
					30		**CMAS04882T1130**	0,96	2.12
					35		**CMAS04882T1135**	0,93	2.05
					40		**CMAS04882T1140**	0,90	1.98
						1	**CMAS04882T11254**	0,98	2.17
						1 ¼	**CMAS04882T11317**	0,93	2.05
						1 ½	**CMAS04882T11381**	0,91	2.01
12	154,70	6.091	77,35	3.045	25		**CMAS04882T1225**	1,24	2.74
					30		**CMAS04882T1230**	1,22	2.69
					35		**CMAS04882T1235**	1,19	2.62
					40		**CMAS04882T1240**	1,16	2.55
						1	**CMAS04882T12254**	1,24	2.74
						1 ¼	**CMAS04882T12317**	1,19	2.62
						1 ½	**CMAS04882T12381**	1,17	2.58

*Diameter is indicated.

Copyright Regina Catene Calibrate s.p.a. - 2020, All rights reserved

SUITABLE FOR CHAINS:

- **843**
- **845**
- **RR 845**
- **HF RR 845**
- **1843T**
- **EW 1843T**

MATERIALS		
SPROCKETS:	S	CARBON STEEL

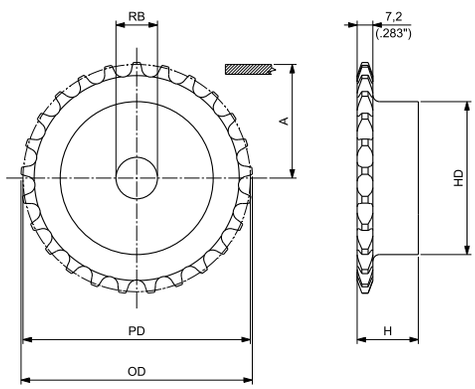

MACHINED SOLID SPROCKETS

N. TEETH	PITCH DIAMETER PD		OUTSIDE DIAMETER OD		WEAR STRIP POSITIONING A		HD		H		BORE SIZE**		PART NUMBER ROUND BORE RB	WEIGHT	
	mm	inch	mm	inch	mm	inch	mm	inch	mm	inch	mm	inch		Kg	lbs
13*	50,06	1.971	57,40	2.260	30,93	1.218	37	1.46	28	1.10	10	0.39	**CMA028431300**	0,28	0.62
15*	61,09	2.405	65,50	2.579	36,45	1.435	45	1.76	28	1.10	10	0.39	**CMA028431500**	0,41	0.90
17*	69,11	2.721	73,60	2.898	40,46	1.593	52	2.05	28	1.10	10	0.39	**CMA028431700**	0,54	1.19
19	77,16	3.038	81,70	3.217	44,48	1.751	60	2.36	28	1.10	12	0.47	**CMA028431900**	0,70	1.54
21	85,22	3.355	89,70	3.531	48,51	1.910	68	2.68	28	1.10	12	0.47	**CMA028432100**	0,89	1.96
23	93,27	3.672	98,20	3.866	52,54	2.068	70	2.76	28	1.10	12	0.47	**CMA028432300**	0,98	2.16
25	101,33	3.989	105,80	4.165	56,57	2.227	70	2.76	28	1.10	12	0.47	**CMA028432500**	1,06	2.34
27	109,40	4.307	114,00	4.488	60,60	2.386	70	2.76	30	1.18	15	0.59	**CMA028432700**	1,17	2.58
29	117,46	4.624	122,00	4.803	64,63	2.544	80	3.15	30	1.18	15	0.59	**CMA028432900**	1,47	3.24
31	125,54	4.943	130,20	5.126	68,67	2.704	90	3.54	30	1.18	16	0.63	**CMA028433100**	1,79	3.95
33	130,66	5.144	138,40	5.449	71,23	2.804	90	3.54	30	1.18	16	0.63	**CMA028433300**	1,88	4.14

*Cannot work with 1843T and EW 1843T series.
**Diameter is indicated (plain bore).

Copyright Regina Catene Calibrate s.p.a. - 2020, All rights reserved

SUITABLE FOR CHAINS:

- **1864 / 1874T**
- **863**
- **1863T**
- **1873T**
- **HFX 1873T**
- **GV 1874T / EV 1874T**
- **GW 1873T / EW 1873T / GD 1873T / GU 1873T**
- **GC 1873T**

MATERIALS

SPROCKETS: S CARBON STEEL

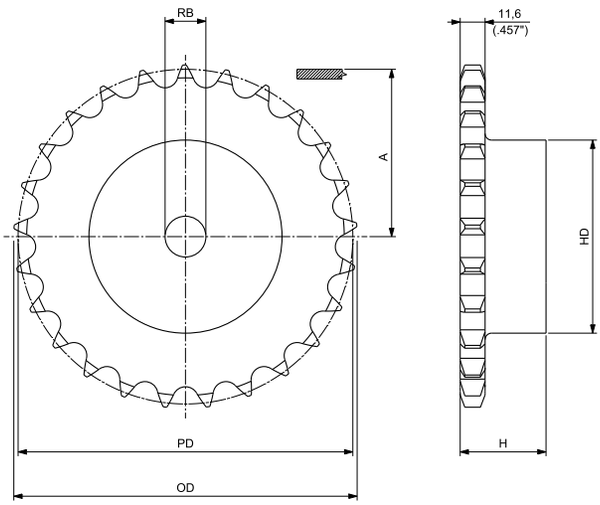

MACHINED SOLID SPROCKETS

N. TEETH	PITCH DIAMETER PD		OUTSIDE DIAMETER OD		WEAR STRIP POSITIONING A		HD		H		BORE SIZE**		PART NUMBER ROUND BORE RB	WEIGHT	
	mm	inch	mm	inch	mm	inch	mm	inch	mm	inch	mm	inch		Kg	lbs
15*	91,63	3.607	99,80	3.929	56,22	2.213	70	2.76	35	1.38	14	0.55	**CMA028631500**	1,26	2.78
17*	103,67	4.081	111,50	4.390	62,24	2.450	80	3.15	35	1.38	16	0.63	**CMA028631700**	1,67	3.68
19	115,75	4.557	124,20	4.890	68,28	2.688	80	3.15	35	1.38	16	0.63	**CMA028631900**	1,82	4.01
21	127,82	5.032	136,00	5.354	74,31	2.926	90	3.54	40	1.57	20	0.79	**CMA028632100**	2,48	5.47
23	139,90	5.508	149,00	5.866	80,35	3.163	90	3.54	40	1.57	20	0.79	**CMA028632300**	2,71	5.97
25	152,00	5.984	160,00	6.299	86,40	3.402	90	3.54	40	1.57	20	0.79	**CMA028632500**	2,91	6.42
27	164,09	6.460	172,30	6.783	92,45	3.640	95	3.74	40	1.57	20	0.79	**CMA028632700**	3,39	7.47
29	176,19	6.937	184,10	7.248	98,50	3.878	95	3.74	40	1.57	20	0.79	**CMA028632900**	3,68	8.11
31	188,31	7.414	196,30	7.728	104,56	4.116	100	3.94	40	1.57	25	0.98	**CMA028633100**	4,18	9,22

*Cannot work with 1863T, 1873T, 1864, 1874T, HFX 1873T, EV 1874T, GD 1874T, GW 1873T, EW 1873T, GD 1873T, GU 1873T and GC 1873T series.
**Diameter is indicated (plain bore).

Copyright Regina Catene Calibrate s.p.a. - 2020, All rights reserved

SUITABLE FOR CHAINS:
- **1883**
- **HFX 1883**

MATERIALS

SPROCKETS: S CARBON STEEL

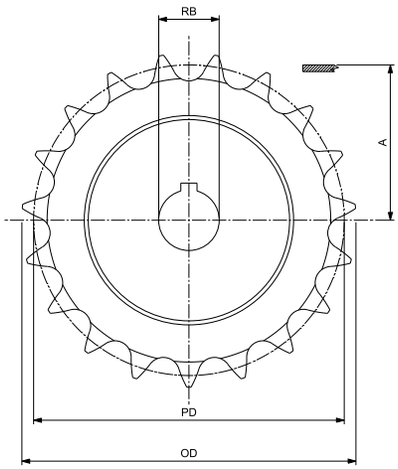

ROUND BORE - DRIVE

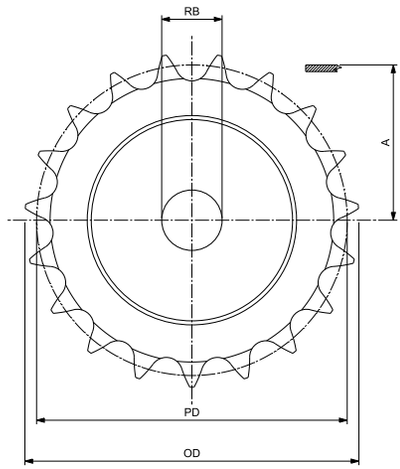

ROUND BORE - IDLER

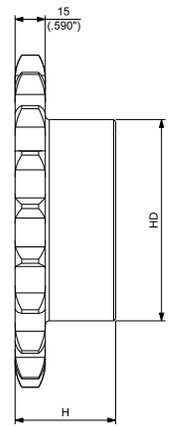

MACHINED SOLID SPROCKETS

N. TEETH	PITCH DIAMETER PD		OUTSIDE DIAMETER OD		WEAR STRIP POSITIONING A		HD		H		BORE SIZE*		PART NUMBER ROUND BORE RB		WEIGHT	
	mm	inch	mm	inch	mm	inch	mm	inch	mm	inch	mm	inch	DRIVE	IDLER	Kg	lbs
19	154,14	6.609	166,00	6.535	93,97	3.678	100	3.937	45	1.772	40		**CMA0218831904**	**CMA0318831904**	3,70	8.16
												1 ½	**CMA0218831910**	**CMA0318831910**	3,70	8.16

*Diameter is indicated.

Copyright Regina Catene Calibrate s.p.a. - 2020, All rights reserved

SUITABLE FOR CHAINS:
- **1700**
- **1702**
- **1701T**

MATERIALS		
SPROCKETS:	PA	POLYAMIDE
SCREWS:	SS	STAINLESS STEEL
NUTS:	B	BRASS

8T & 10T SPROCKETS
(for 12T & 13T see next page)

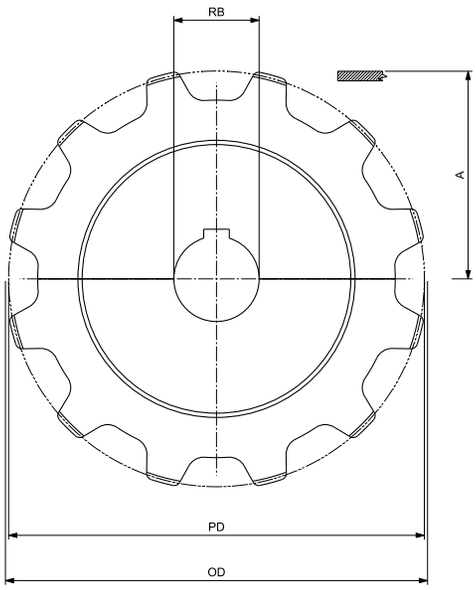

ROUND BORE - DRIVE

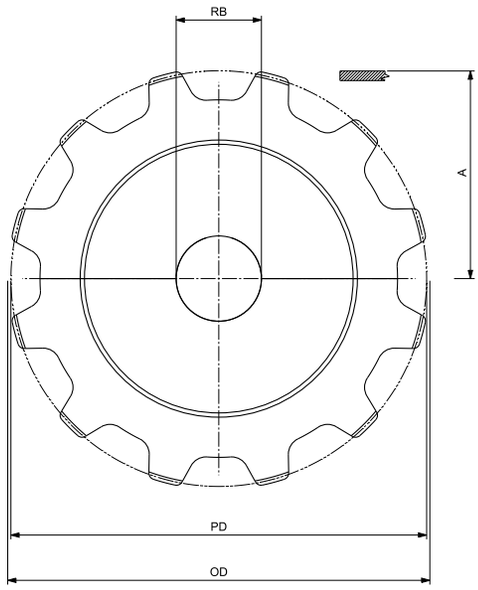

ROUND BORE - IDLER

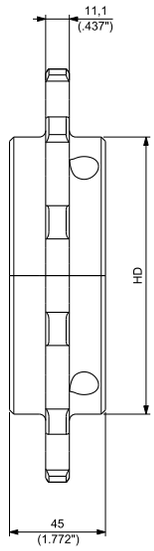

MACHINED SPLIT DRIVE AND IDLER SPROCKETS

N. TEETH	PITCH DIAMETER PD		OUTSIDE DIAMETER OD		WEAR STRIP POSITIONING A		HD		BORE SIZE*		PART NUMBER ROUND BORE RB		WEIGHT	
	mm	inch	mm	inch	mm	inch	mm	inch	mm	inch**	DRIVE	IDLER	Kg	lbs
8	130,66	5.144	132,30	5.209	53,33	2.100	80	3.15	25		**CMAS0217000825**	**CMAS0317000825**	0,34	0.75
									30		**CMAS0217000830**	**CMAS0317000830**	0,33	0.73
									35		**CMAS0217000835**	**CMAS0317000835**	0,32	0.70
									40		**CMAS0217000840**	**CMAS0317000840**	0,30	0.66
										1	CMAS02170008254	CMAS03170008254	0,34	0.75
										1 ¼	CMAS02170008317	CMAS03170008317	0,33	0.73
										1 ⅜	CMAS02170008349	CMAS03170008349	0,32	0.70
										1 7⁄16	CMAS02170008365	CMAS03170008365	0,31	0.68
										1 ½	CMAS02170008381	CMAS03170008381	0,30	0.66
10	161,80	6.370	165,20	6.504	68,90	2.713	110	4.33	25		**CMAS0217001025**	**CMAS0317001025**	0,60	1.32
									30		**CMAS0217001030**	**CMAS0317001030**	0,59	1.30
									35		**CMAS0217001035**	**CMAS0317001035**	0,57	1.27
									40		**CMAS0217001040**	**CMAS0317001040**	0,56	1.23
										1	CMAS02170010254	CMAS03170010254	0,61	1.34
										1 ¼	CMAS02170010317	CMAS03170010317	0,60	1.32
										1 ⅜	CMAS02170010349	CMAS03170010349	0,59	1.30
										1 7⁄16	CMAS02170010365	CMAS03170010365	0,57	1.27
										1 ½	CMAS02170010381	CMAS03170010381	0,56	1.23

*Diameter is indicated.
** Imperial round bore drive sprockets are supplied with setscrew. Metric round bore drive sprockets are supplied without setscrew.

Copyright Regina Catene Calibrate s.p.a. - 2020, All rights reserved

SUITABLE FOR CHAINS:

- **1700**
- **1702**
- **1701T**

MATERIALS		
SPROCKETS:	PA	POLYAMIDE
SCREWS:	SS	STAINLESS STEEL
NUTS:	B	BRASS

12T & 13T SPROCKETS

(for 8T & 10T see previous page)

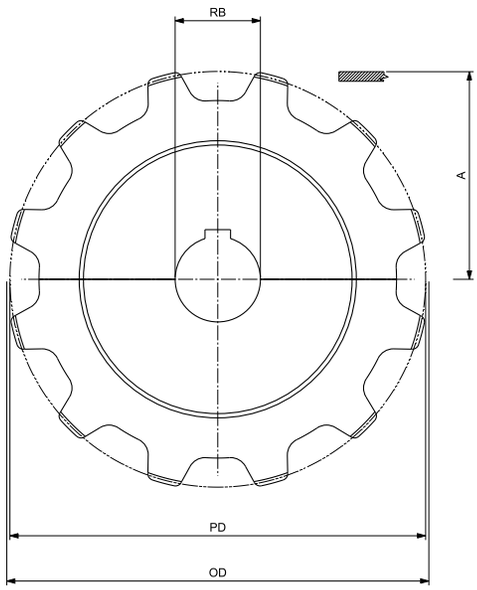

ROUND BORE - DRIVE

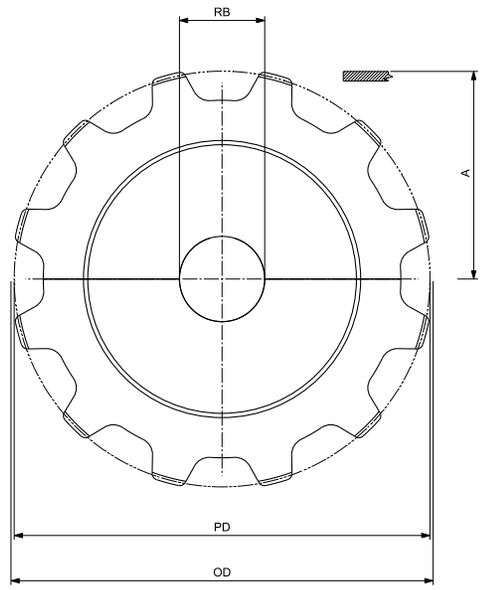

ROUND BORE - IDLER

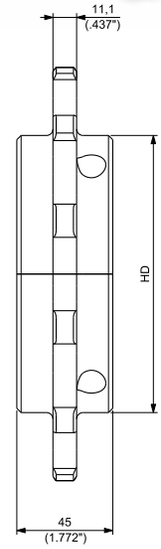

MACHINED SPLIT DRIVE AND IDLER SPROCKETS

N. TEETH	PITCH DIAMETER PD		OUTSIDE DIAMETER OD		WEAR STRIP POSITIONING A		HD		BORE SIZE*		PART NUMBER ROUND BORE RB		WEIGHT	
	mm	inch	mm	inch	mm	inch	mm	inch	mm	inch**	DRIVE	IDLER	Kg	lbs
12	193,19	7.606	198,00	7.795	84,60	3.331	130	5.12	25		**CMAS0217001225**	**CMAS0317001225**	0,84	1.85
									30		**CMAS0217001230**	**CMAS0317001230**	0,83	1.83
									35		**CMAS0217001235**	**CMAS0317001235**	0,82	1.80
									40		**CMAS0217001240**	**CMAS0317001240**	0,80	1.77
										1	CMAS02170012254	CMAS03170012254	0,84	1.85
										1 ¼	CMAS02170012317	CMAS03170012317	0,84	1.85
										1 ⅜	CMAS02170012349	CMAS03170012349	0,83	1.83
										1 7⁄16	CMAS02170012365	CMAS03170012365	0,82	1.80
										1 ½	CMAS02170012381	CMAS03170012381	0,81	1.78
13	208,93	8.226	214,20	8.433	92,47	3.641	150	5.91	25		**CMAS0217001325**	**CMAS0317001325**	0,84	1.85
									30		**CMAS0217001330**	**CMAS0317001330**	0,83	1.83
									35		**CMAS0217001335**	**CMAS0317001335**	0,82	1.80
									40		**CMAS0217001340**	**CMAS0317001340**	0,80	1.77
										1	CMAS02170013254	CMAS03170013254	0,84	1.85
										1 ¼	CMAS02170013317	CMAS03170013317	0,84	1.85
										1 ⅜	CMAS02170013349	CMAS03170013349	0,83	1.83
										1 7⁄16	CMAS02170013365	CMAS03170013365	0,82	1.80
										1 ½	CMAS02170013381	CMAS03170013381	0,81	1.78

*Diameter is indicated.
** Imperial round bore drive sprockets are supplied with setscrew. Metric round bore drive sprockets are supplied without setscrew.

Copyright Regina Catene Calibrate s.p.a. - 2020, All rights reserved

Acmi
REGINA
CHAIN
PERFORMANCE IN MOTION

frizzante
frizzante
frizzante

REGINA CHAIN

PERFORMANCE IN MOTION

Matveyor®

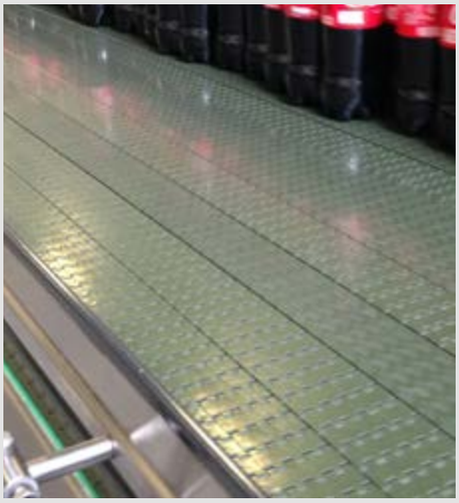

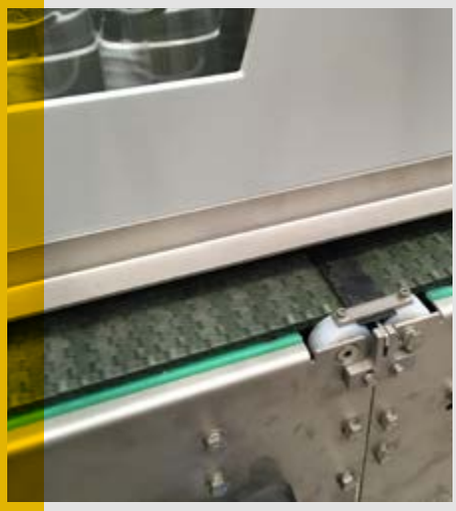

REGINA CHAIN

PERFORMANCE IN MOTION

Matveyor®

8mm Nanopitch Belt

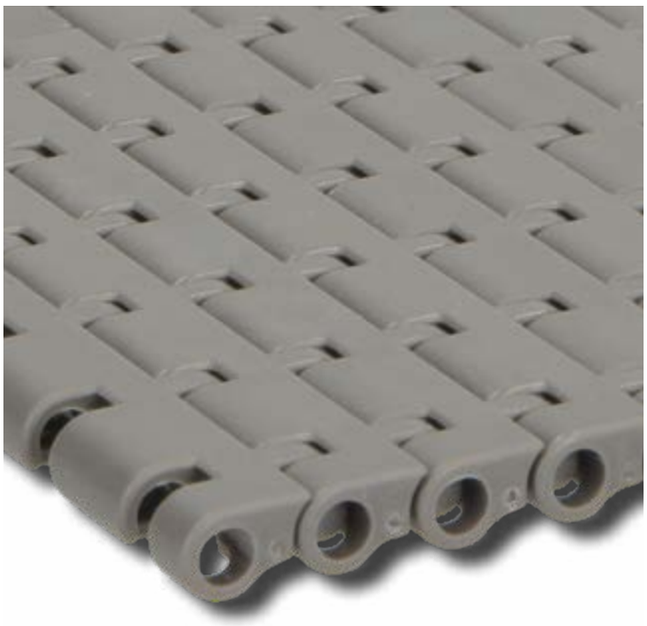

INDUSTRIES AND APPLICATIONS

Suitable for handling unstable and delicate products with small foot-print (loose or packaged) in a nose-over linear transfer from the head of one conveyor to the next one.

INDUSTRIES

Bottling and canning

Food filling

Container manufacturing

Pharmaceutical

Paper/cardboard

Consumer goods

APPLICATIONS

Infeed/outfeed packaging machines

Product handling within packaging machine

Dynamic alternative to the dead transfer plate between two conveyors equipped with longer pitch belts that do not allow for direct tight product transfer

FEATURES

- Super-short pitch of 8 mm (0.315"), with no chordal effect in the engagement with sprockets or nosebar, allowing the maximization of product stability during head transfer.

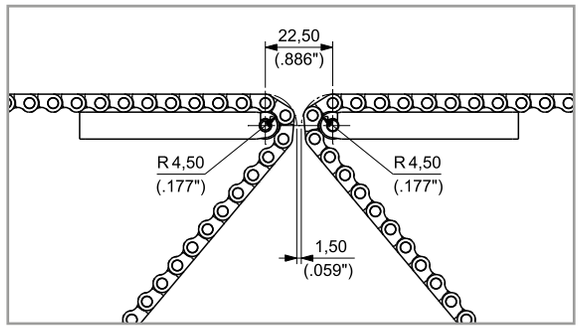

- Pinless and clipless snap-on assembly, easing belt installation and eliminating complexity related to belt closing junction.

- Highest mechanical strength among all 8 mm pitch belts available on the market with independent pin assembly.

Matveyor

Copyright Regina Catene Calibrate s.p.a. - 2020, All rights reserved

BELT ASSEMBLY

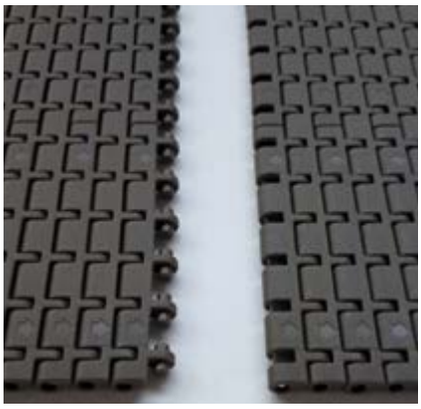

1) Bring the two ends of the belt close to each other on the conveyor. In order to guarantee the brick-lay assembly of the belt, make sure to always link 3" modules to 6" modules at belt edges.

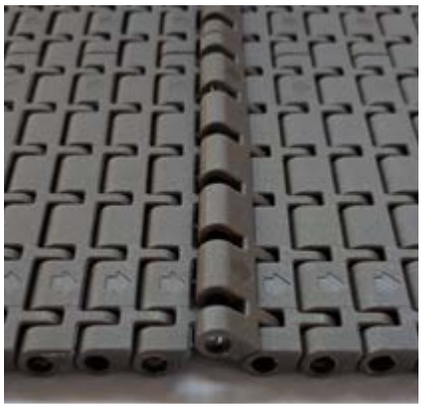

REQUIRED TOOLS
- Plastic hammer

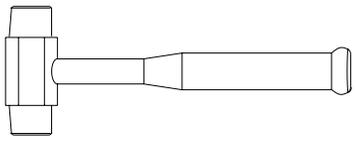

2) Position hinge end over pin end, making sure that each hinge is matched with its corresponding pin.

3) Starting from one edge of the belt, gently hammer the hinges into the corresponding pins along the belt width, by means of a plastic hammer. When the operation is completed, please remember to check that hinge and pins are jointed correctly.

BELT DISASSEMBLY

1) Insert the mounting pin under the hinges of the belt to be disassembled.

REQUIRED TOOLS
- Pin with 6 mm diameter and length L= belt width + 40 mm
- Screwdriver:

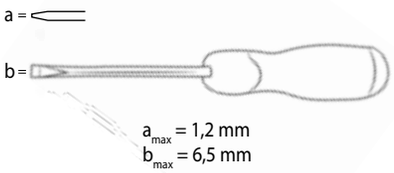

2) Insert the screwdriver into the space between the hinges.
NOTE: The screwdriver should have the dimensions indicated above.

3) Slightly leverage the screwdriver to separate the pins from their corresponding hinges.
DO NOT ROTATE THE SCREWDRIVER.

4) Repeat the previous operation along the belt width, acting on as many hinges as needed, until the belt comes apart completely.

Copyright Regina Catene Calibrate s.p.a. - 2020, All rights reserved

6,15 mm (0.242") THICKNESS SOLID TOP

NEW

Ideal to equip conveyors with tight nose-over transfer of unstable and delicate products with small foot-print. Particularly suitable for the following applications:
- As a dynamic alternative to the dead transfer plate between two conveyors equipped with longer pitch belts that do not allow for direct transfer of tight products.
- Product handling within packaging machines.
- All other unstable and delicate small foot-print loose products handling applications.

- **Belt widths:** 76,2 mm (3") or wider in 76,2 mm (3") increments
- **Working Load (at 25°C/77°F):** 8000 N/m (548 lbs/ft) for UP material
- **Belt weight:** 5,36 kg/m² (1.10 lbs/ft²) for UP material

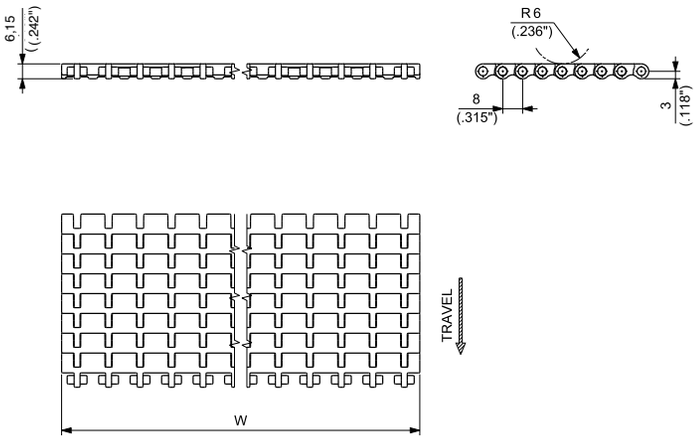

Materials see page 12

Sprockets see pages 163÷164

Applications see page 20

WIDTH W		MATERIAL
		Module
		UP ULTRA PERFORMANCE HOMOPOLYMER DELRIN ®
mm	inch	PART NUMBER
152,4	6	**8300UP006**
228,6	9	**8300UP009**
304,8	12	**8300UP012**
381,0	15	**8300UP015**
457,2	18	**8300UP018**
533,4	21	**8300UP021**
609,6	24	**8300UP024**
685,8	27	**8300UP027**
762,0	30	**8300UP030**
838,2	33	**8300UP033**
914,4	36	**8300UP036**
990,6	39	**8300UP039**

Belts wider than 990,6 mm (39") are available in 76,2 mm (3") increments.
To identify the Part Numbers, please substitute the last three digits of the PN with the desired width.
Example: for a 42" wide belt (=39+3"), the PN for UP material is "8300UP042".

Standard packaging:
Belts are supplied in the length requested by the customer.

Copyright Regina Catene Calibrate s.p.a. - 2020, All rights reserved

SUITABLE FOR CHAINS:
- **8300**

MATERIALS		
SPROCKETS:	**PA**	POLYAMIDE

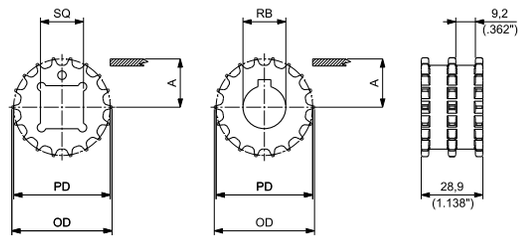

SQUARE BORE - DRIVE/IDLER ROUND BORE - DRIVE

MACHINED SOLID DRIVE SPROCKETS

N. TEETH	PITCH DIAMETER PD		OUTSIDE DIAMETER OD		WEAR STRIP POSITIONING A		BORE SIZE*		PART NUMBER SQUARE BORE SQ DRIVE/IDLER	PART NUMBER ROUND BORE RB DRIVE	WEIGHT	
	mm	inch	mm	inch	mm	inch	mm	inch**			Kg	lbs
18	46,07	1.814	47,00	1.850	20,04	0.789	20		**MPBAQ83001820**	**MPBAT83001820**	0,03	0.07
							25			**MPBAT83001825**	0,03	0.07
								¾	**MPBAQ830018190**	**MPBAT830018190**	0,03	0.07
								1		**MPBAT830018254**	0,03	0.07
24	61,29	2.413	62,30	2.453	27,65	1.088	20			**MPBAT83002420**	0,07	0.15
							25		**MPBAQ83002425**	**MPBAT83002425**	0,06	0.13
							30			**MPBAT83002430**	0,05	0.11
								1	**MPBAQ830024254**	**MPBAT830024254**	0,06	0.13
								1¼		**MPBAT830024317**	0,05	0.11

*In case of round bore, diameter is indicated. In case of square bore, side of the square is indicated.
** Imperial round bore drive sprockets are supplied with setscrew. Metric round bore drive sprockets are supplied without setscrew.

Copyright Regina Catene Calibrate s.p.a. - 2020, All rights reserved

SUITABLE FOR CHAINS:
- **8300**

MATERIALS		
SPROCKETS:	PA	POLYAMIDE
SCREWS:	SS	STAINLESS STEEL
NUTS:	B	BRASS

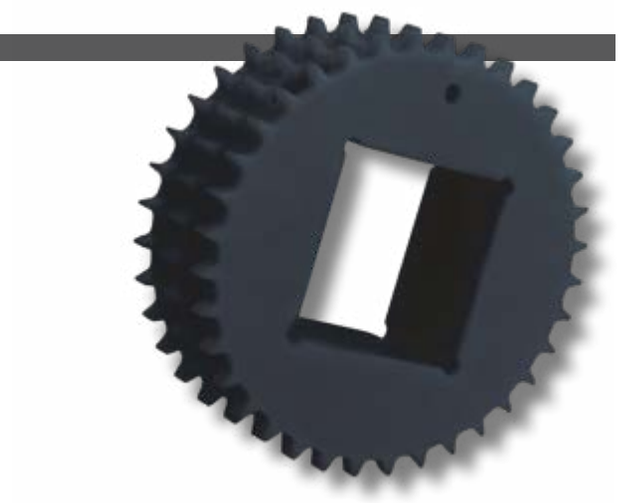

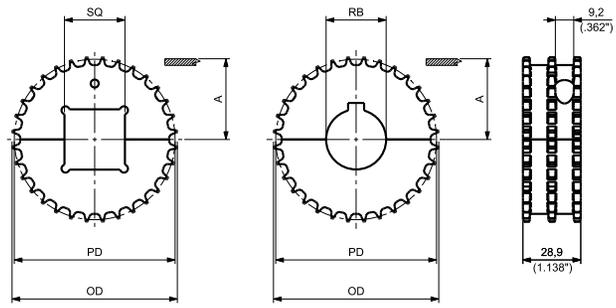

SQUARE BORE - DRIVE/IDLER

ROUND BORE - DRIVE

MACHINED SPLIT DRIVE AND IDLER SPROCKETS

N. TEETH	PITCH DIAMETER PD		OUTSIDE DIAMETER OD		WEAR STRIP POSITIONING A		BORE SIZE*		PART NUMBER SQUARE BORE SQ DRIVE/IDLER	PART NUMBER ROUND BORE RB DRIVE	WEIGHT	
	mm	inch	mm	inch	mm	inch	mm	inch**			Kg	lbs
32	81,59	3.212	82,60	3.252	37,80	1.488	25			**MPBAST83003225**	0,14	0.31
							30		**MPBASQ83003230**	**MPBAST83003230**	0,13	0.29
							35			**MPBAST83003235**	0,13	0.29
							40		**MPBASQ83003240**	**MPBAST83003240**	0,12	0.26
								1		**MPBAST830032254**	0,14	0.31
								1¼		**MPBAST830032317**	0,13	0.29
								1½	**MPBASQ830032381**	**MPBAST830032381**	0,12	0.26
36	91,79	3.614	92,70	3.650	42,99	1.692	25			**MPBAST83003625**	0,20	0.44
							30		**MPBASQ83003630**	**MPBAST83003630**	0,19	0.42
							35			**MPBAST83003635**	0,18	0.40
							40		**MPBASQ83003640**	**MPBAST83003640**	0,17	0.37
								1		**MPBAST830036254**	0,20	0.44
								1¼		**MPBAST830036317**	0,19	0.42
								1½	**MPBASQ830036381**	**MPBAST830036381**	0,18	0.40

*In case of round bore, diameter is indicated. In case of square bore, side of the square is indicated.
** Imperial round bore drive sprockets are supplied with setscrew. Metric round bore drive sprockets are supplied without setscrew.

Copyright Regina Catene Calibrate s.p.a. - 2020, All rights reserved

REGINA CHAIN

PERFORMANCE IN MOTION

Matveyor®

½" Pitch Belts and Chains

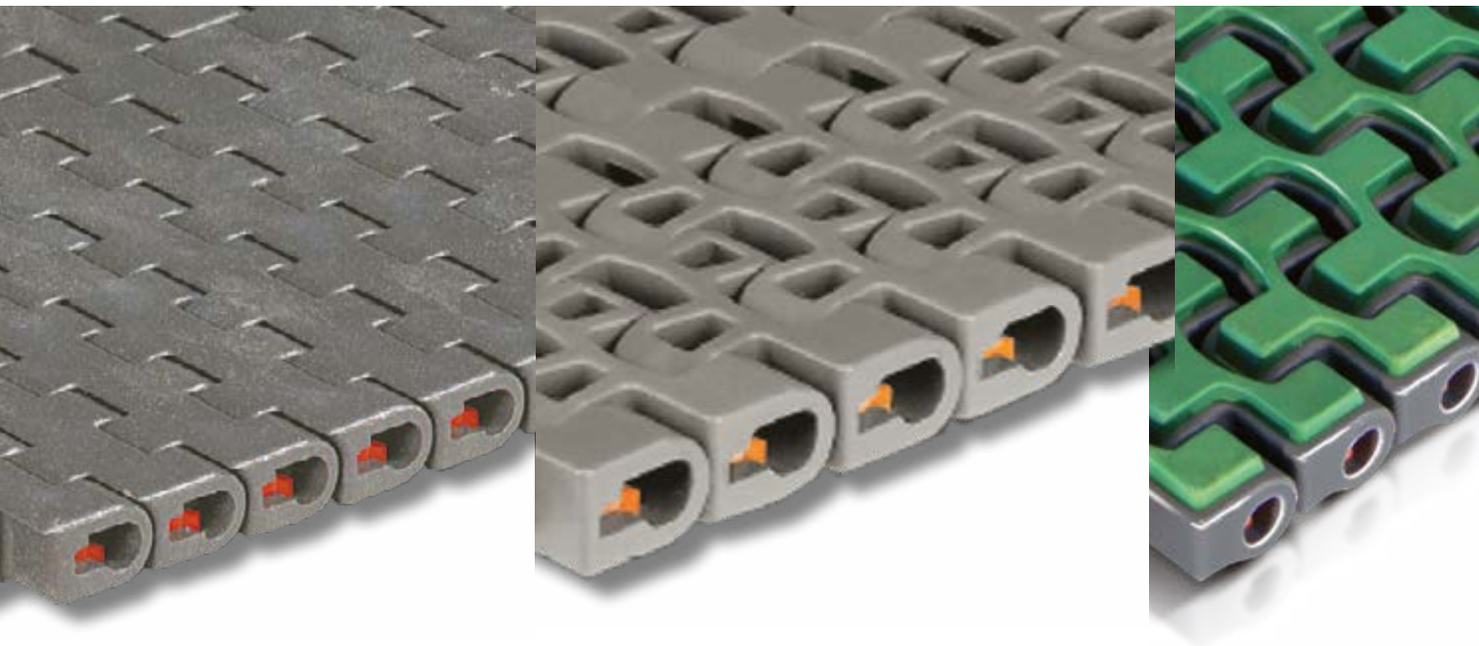

INDUSTRIES AND APPLICATIONS

Suitable for handling small and unstable products (loose or packaged) in a linear transfer from the head of one conveyor to the next one.

INDUSTRIES

Bottling and canning
Food filling
Container manufacturing
Pharmaceutical
Paper/cardboard
Consumer goods

APPLICATIONS

Depallettizer
Mass conveyors
Accumulation tables
Infeed packaging machines
Packaged product convey
Product handling within packaging machine (narrow chains)

REGINA SHORT PITCH (1/2") BELTS

REGINA offers the most complete range of 1/2" pitch belts available on the market, all with 8,7 mm thickness, having the following technical and geometrical features:

- Top surface: solid, rubberized and flush grid.
- Bottom surface: flat (available for metric stadard width only) or round.
- Width standard: metric (85 mm width increments) or imperial (3" width increments).
- Tracking guide: belts available with or without tracking guide, depending on the series.

The complete range of REGINA 1/2" pitch belts, together with their geometrical features and available materials is showed in the table below.

SERIES	TOP SURFACE	BOTTOM DESIGN	WIDTH STANDARD	TRACKING GUIDE VERSION		MODULE MATERIAL	RUBBER MATERIAL
				Without	With		
610	Solid	Round	Metric	Available	Available	NEW e-F.A.S.T. DK2™ UP PP	
600	Solid	Flat	Metric	Available	Available	e-F.A.S.T. DK2™ UP PP	
300	Solid	Round	Imperial	Available	Not available	e-F.A.S.T. DK2™ UP PP	
500	Flush Grid	Flat	Metric	Available	Available	UP PP	
200	Flush Grid	Round	Imperial	Available	Not available	UP PP	
HF 510	Rubberized	Round	Metric	Available	Available	ULF PP	TPE
HF 200	Rubberized	Round	Imperial	Available	Not available	ULF PP	TPE
LBP 610	Rollers	Round	Metric	Available	Available	UP	

Copyright Regina Catene Calibrate s.p.a. - 2020, All rights reserved

FEATURES

As a complement to its 1/2" pitch modular belts, REGINA proposes a complete range of nose-over transfer components, including static modular nose-over bars and an 8T sprocket, allowing for the following:

- Support products transfer from one conveyor to the next one
- Allow the belt to wrap around a small radius at the head of the conveyor, minimizing the deadplate width

NOSE-OVER TRANSFER

Exhibit 1 and Exhibit 2 display the minimum recommended center to center distance between head transfer components (nosebar or 8T sprockets), depending on the belt series.

EXHIBIT 1

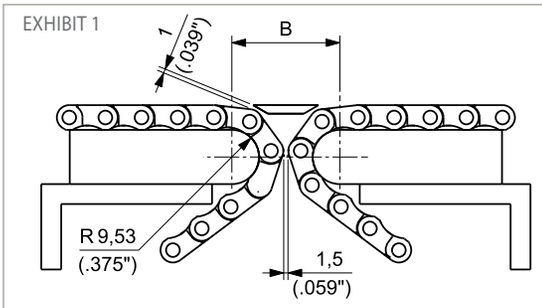

The minimum recommended chordal gap between belt and deadplate is 1 mm (0.039").

BELT SERIES	MINIMUM CENTER TO CENTER DISTANCE B	
	mm	inch
610, 300, 200	37,95	1.494
600, 500	40,76	1.604
HF 510, HF 200	41,95	1.652
LBP 610	57,37	2.258

EXHIBIT 2

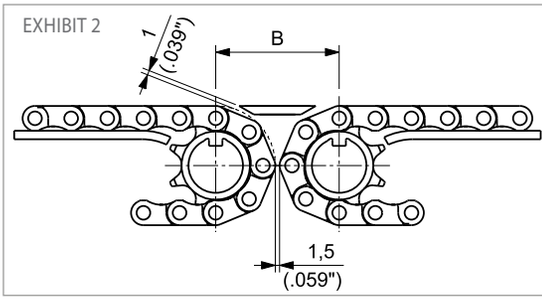

The minimum recommended chordal gap between belt and deadplate is 1 mm (0.039").

BELT SERIES	MINIMUM CENTER TO CENTER DISTANCE B	
	mm	inch
610, 300, 200	43,39	1.708
HF 510, HF 200	47,39	1.866
LBP 610	63,46	2.498

PRODUCT SELECTION

A critical aspect of choosing a REGINA solid top 1/2" pitch belt is to identify the best belt bottom contour suitable for the application (please refer to Exhibit 3). In particular:

- The round bottom design dramatically reduces the chordal effect when the belt engages with the nose-over bar
  - Such reduction is as high as 89%, from 1,4 mm of the flat-bottom to 0,15 mm of the round-bottom
- The flat bottom design guarantees a continuous contact between belt and wear strips
  - Such contact allows for less specific pressure than round bottom design

EXHIBIT 3 - COMPARISON BETWEEN REGINA SOLID TOP 1/2" PITCH FLAT BOTTOM AND ROUND BOTTOM BELTS DESIGN

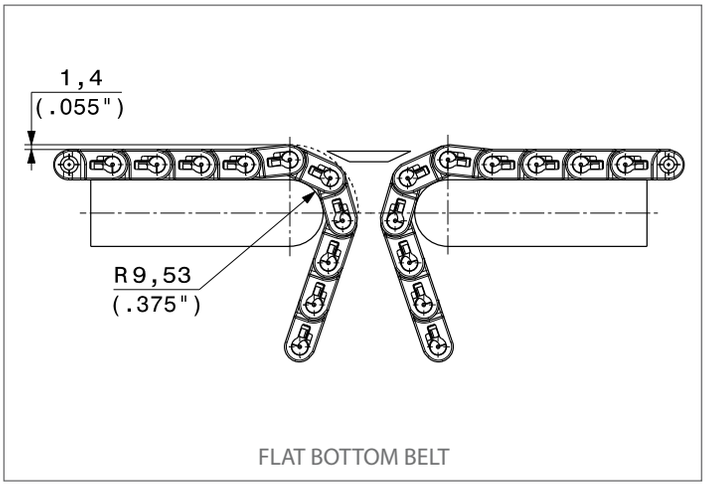

FLAT BOTTOM BELT

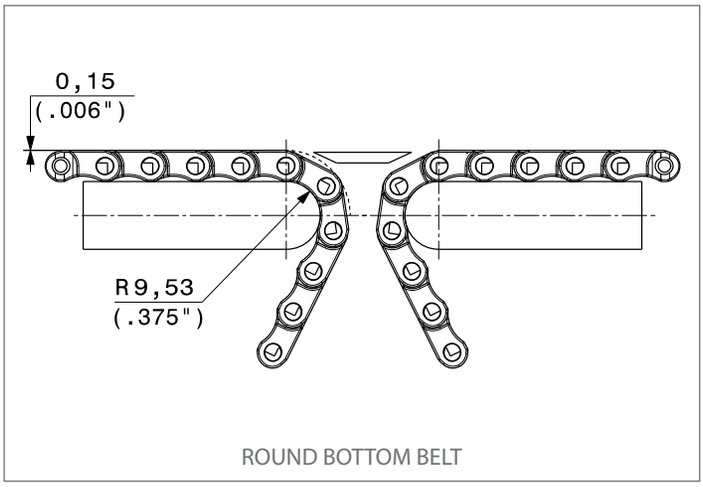

ROUND BOTTOM BELT

As a consequence:

- Round bottom surface design accomplishes greater product stability during end-to-end transfer.
- Flat bottom surface design minimizes belt wear.

Copyright Regina Catene Calibrate s.p.a. - 2020, All rights reserved

8,7 mm (0.343") THICKNESS
SOLID TOP

This belt offers a smooth and completely closed surface to provide excellent support and minimize product tipping.
Particularly suitable for conveyors where head transfer of products is required.

- **Belt widths:** 85 mm (3.346") or wider in 85 mm (3.346") increments
- **Working Load (at 25°C/77°F):** 14000 N/m (960 lbs/ft) for UP and DK2™ materials
  10000 N/m (685 lbs/ft) for PP material
- **Belt weight:** 9,55 kg/m² (1.95 lbs/ft²) for UP and DK2™ materials
  6,46 kg/m² (1.32 lbs/ft²) for PP material

DUPONT® KEVLAR® INSIDE

VERSION WITHOUT TRACKING GUIDE

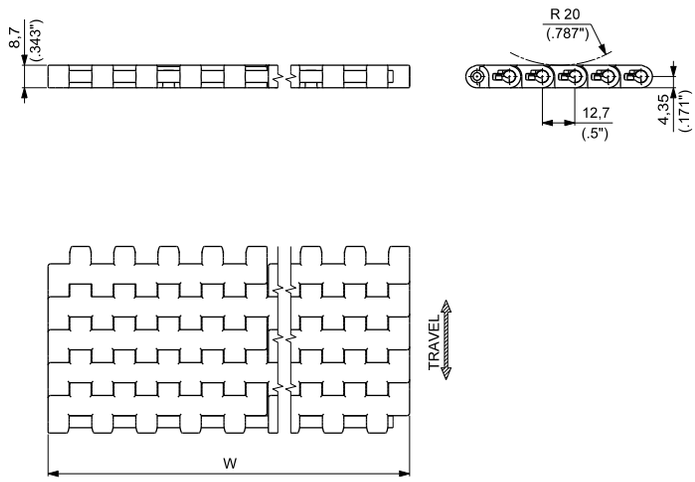

VERSION WITH TRACKING GUIDE

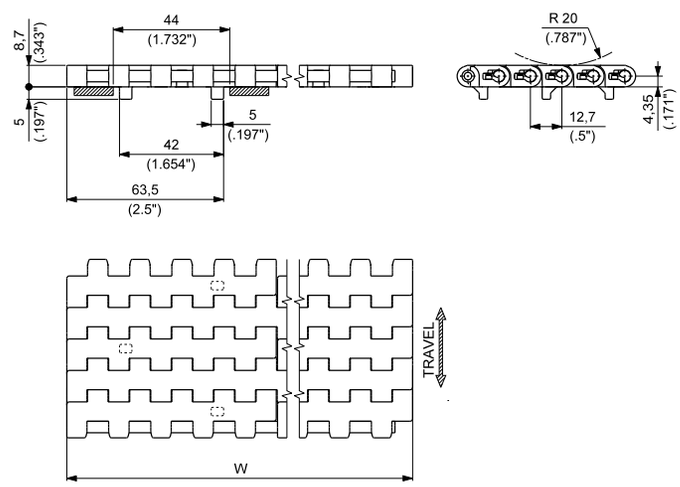

NOTE: The belt is also available with single tracking guide at both belt sides. Please contact REGINA customer service for further information.

Materials see page 12
Nosebar see page 181
Sprockets see pages 188÷192
Applications see page 22

WIDTH W		MATERIALS						
		Module						Pin
		UP ULTRA PERFORMANCE HOMOPOLYMER DELRIN ®		DK2™ SPECIAL DELRIN ® REINFORCED WITH KEVLAR ®		PP SPECIAL POLYPROPYLENE[1]		
		PART NUMBER		PART NUMBER		PART NUMBER		
mm	inch	WITHOUT TRACKING GUIDE	WITH TRACKING GUIDE	WITHOUT TRACKING GUIDE	WITH TRACKING GUIDE	WITHOUT TRACKING GUIDE	WITH TRACKING GUIDE	
85	3.35	**600AUP0085**	**600AGUP0085**	**600AD2K0085**	**600AGD2K0085**	**600APP0085**	**600AGPP0085**	PBT
170	6.69	**600BUP0170**	**600BG1UP0170**	**600BD2K0170**	**600BG1D2K0170**	**600BPP0170**	**600BG1PP0170**	POLYPROPYLENE (PBT on request)
255	10.04	**600BUP0255**	**600BG1UP0255**	**600BD2K0255**	**600BG1D2K0255**	**600BPP0255**	**600BG1PP0255**	
340	13.39	**600BUP0340**	**600BG1UP0340**	**600BD2K0340**	**600BG1D2K0340**	**600BPP0340**	**600BG1PP0340**	
425	16.73	**600BUP0425**	**600BG1UP0425**	**600BD2K0425**	**600BG1D2K0425**	**600BPP0425**	**600BG1PP0425**	
510	20.08	**600BUP0510**	**600BG1UP0510**	**600BD2K0510**	**600BG1D2K0510**	**600BPP0510**	**600BG1PP0510**	
595	23.43	**600BUP0595**	**600BG1UP0595**	**600BD2K0595**	**600BG1D2K0595**	**600BPP0595**	**600BG1PP0595**	
680	26.77	**600BUP0680**	**600BG1UP0680**	**600BD2K0680**	**600BG1D2K0680**	**600BPP0680**	**600BG1PP0680**	
765	30.12	**600BUP0765**	**600BG1UP0765**	**600BD2K0765**	**600BG1D2K0765**	**600BPP0765**	**600BG1PP0765**	
850	33.46	**600BUP0850**	**600BG1UP0850**	**600BD2K0850**	**600BG1D2K0850**	**600BPP0850**	**600BG1PP0850**	
935	36.81	**600BUP0935**	**600BG1UP0935**	**600BD2K0935**	**600BG1D2K0935**	**600BPP0935**	**600BG1PP0935**	
1020	40.16	**600BUP1020**	**600BG1UP1020**	**600BD2K1020**	**600BG1D2K1020**	**600BPP1020**	**600BG1PP1020**	

[1] ACTUAL WIDTH CAN BE UP TO 1% GREATER THAN NOMINAL WIDTH

Belts wider than 1020 mm (40.16") are available in 85 mm (3.35") increments.
To identify the Part Numbers, please substitute the last four digits of the PN with the desired width.
Example: for a 1105 mm wide belt (=1020+85 mm) without guide, the PN for UP material is "600BUP1105".

Standard packaging:
Belt widths ≤ 680 mm (26.77") are supplied in rolls of 3,048 m (10 ft) each.
Belt widths ≥ 765 mm (30.12") are supplied at the length requested by the customer.

Copyright Regina Catene Calibrate s.p.a. - 2020, All rights reserved

8,7 mm (0.343") THICKNESS SOLID TOP

This belt offers a smooth and completely closed surface to provide excellent support and minimize product tipping.
Particularly suitable for conveyors where head transfer of products is required.

- **Belt widths:** 85 mm (3.346") or wider in 85 mm (3.346") increments
- **Working Load (at 25°C/77°F):** 14000 N/m (960 lbs/ft) for e-F.A.S.T. material
- **Belt weight:** 9,55 kg/m² (1.95 lbs/ft²) for e-F.A.S.T. material

e-F.A.S.T. ECOLOGICAL FRICTION ABATING THERMO-PLASTIC

VERSION WITHOUT TRACKING GUIDE

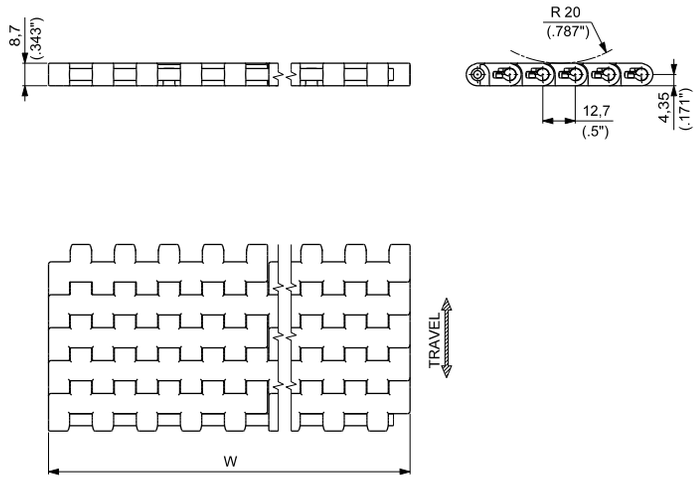

VERSION WITH TRACKING GUIDE

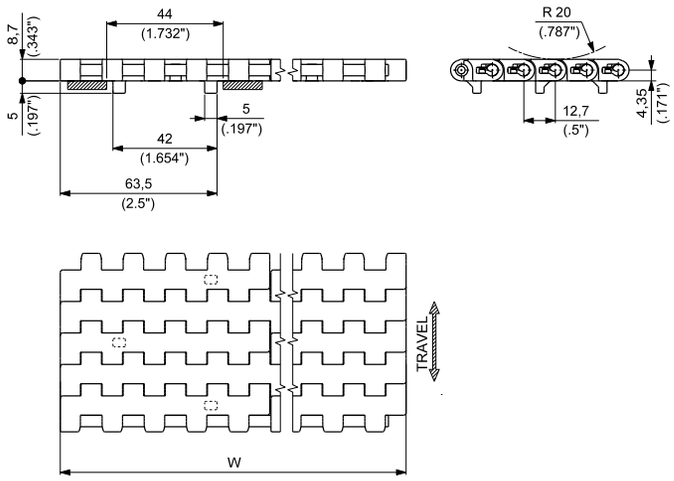

NOTE: The belt is also available with single tracking guide at both belt sides. Please contact REGINA customer service for further information.

Materials see page 12
Nosebar see page 181
Sprockets see pages 188÷192
Applications see page 22

WIDTH W		MATERIALS		
		NEW e-F.A.S.T. ECOLOGICAL FRICTION ABATING THERMOPLASTIC		Pin
		PART NUMBER		
mm	inch	WITHOUT TRACKING GUIDE	WITH TRACKING GUIDE	
85	3.35	**600AEF0085**	**600AGEF0085**	PBT
170	6.69	**600AEF0170**	**600AG1EF0170**	
255	10.04	**600AEF0255**	**600AG1EF0255**	
340	13.39	**600AEF0340**	**600AG1EF0340**	
425	16.73	**600AEF0425**	**600AG1EF0425**	
510	20.08	**600AEF0510**	**600AG1EF0510**	
595	23.43	**600AEF0595**	**600AG1EF0595**	
680	26.77	**600AEF0680**	**600AG1EF0680**	
765	30.12	**600AEF0765**	**600AG1EF0765**	
850	33.46	**600AEF0850**	**600AG1EF0850**	
935	36.81	**600AEF0935**	**600AG1EF0935**	
1020	40.16	**600AEF1020**	**600AG1EF1020**	

Belts wider than 1020 mm (40.16") are available in 85 mm (3.35") increments.
To identify the Part Numbers, please substitute the last four digits of the PN with the desired width.
Example: for a 1105 mm wide belt (=1020+85 mm) without guide, the PN for EF material is "600AEF1105".

Standard packaging:
Belt widths ≤ 680 mm (26.77") are supplied in rolls of 3,048 m (10 ft) each.
Belt widths ≥ 765 mm (30.12") are supplied at the length requested by the customer.

Copyright Regina Catene Calibrate s.p.a. - 2020, All rights reserved

ACTIVE TRANSFER MODULES
8,7 mm (0.343") THICKNESS
SOLID TOP

Active transfer modules 600G ATM series allow the transfer of the products between two 90° conveyor tracks without using dead plates.
Left and right version available.

DUPONT® KEVLAR® INSIDE

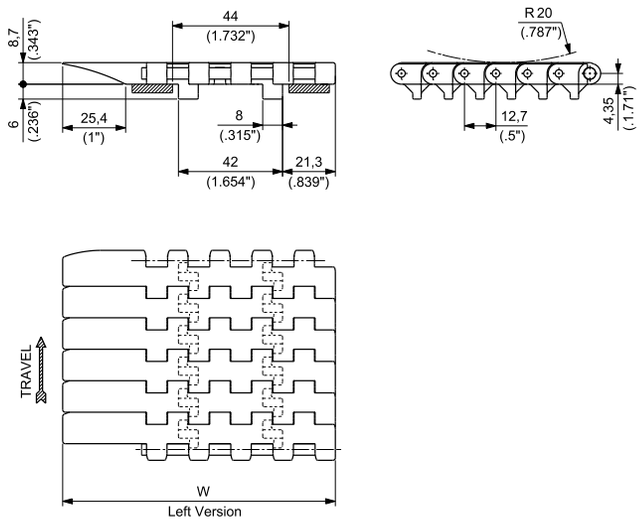

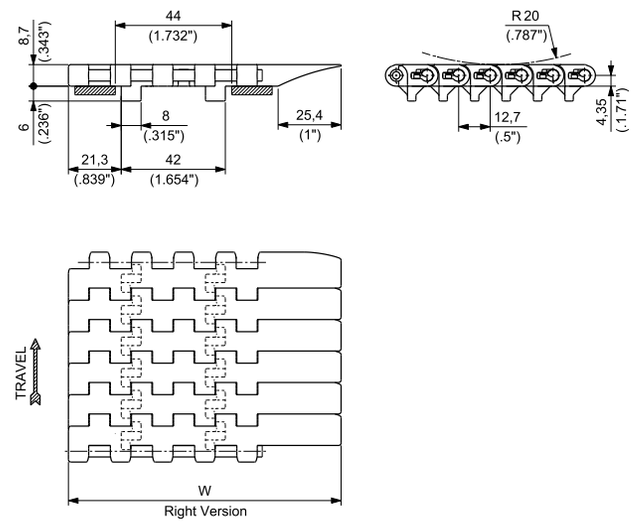

Materials see page 12
Sprockets see pages 188÷191
Applications see page 22

600G ATM - Left Version

MATERIALS Plate	MATERIALS Pin	ITEM DESCRIPTION	PART NUMBER	WIDTH W mm	WIDTH W inch	PLATE THICKNESS mm	PLATE THICKNESS inch	WORKING LOAD (25°C/77°F) N	WORKING LOAD (25°C/77°F) lbs	WEIGHT kg/m	WEIGHT lbs/ft
ULTRA PERFORMANCE HOMOPOLYMER DELRIN ® UP	POLYPROPYLENE	600BGATM UP 0085 SX	600BGATMUP085S	110	4.33	8,7	0.343	1190	268	0,96	0.64
SPECIAL DELRIN ® REINFORCED WITH KEVLAR ® DK2™	POLYPROPYLENE	600BGATM D2K 0085 SX	600BGATMD2K085S	110	4.33	8,7	0.343	1190	268	0,96	0.64

600G ATM - Right Version

MATERIALS Plate	MATERIALS Pin	ITEM DESCRIPTION	PART NUMBER	WIDTH W mm	WIDTH W inch	PLATE THICKNESS mm	PLATE THICKNESS inch	WORKING LOAD (25°C/77°F) N	WORKING LOAD (25°C/77°F) lbs	WEIGHT kg/m	WEIGHT lbs/ft
ULTRA PERFORMANCE HOMOPOLYMER DELRIN ® UP	POLYPROPYLENE	600BGATM UP 0085 DX	600BGATMUP085D	110	4.33	8,7	0.343	1190	268	0,96	0.64
SPECIAL DELRIN ® REINFORCED WITH KEVLAR ® DK2™	POLYPROPYLENE	600BGATM D2K 0085 DX	600BGATMD2K085D	110	4.33	8,7	0.343	1190	268	0,96	0.64

Standard packaging: Rolls of 3,048 m (10 feet)

Copyright Regina Catene Calibrate s.p.a. - 2020, All rights reserved

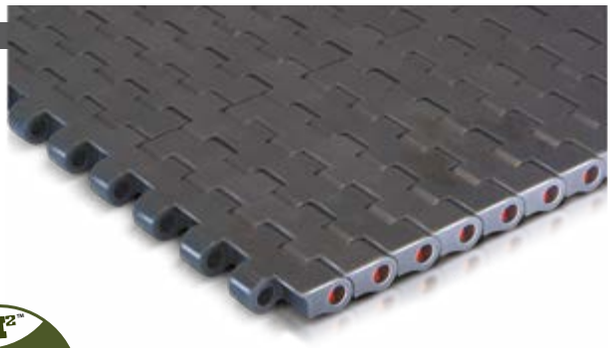

8,7 mm (0.343") THICKNESS
SOLID TOP

The belt offers a completely closed top surface design for an excellent product support without tipping. The round bottom surface combined to the reduced pitch (1/2") provides the minimum chordal effect for an optimum head transfer of products. Particularly suitable for conveyors where a head transfer of products is required.

- **Belt widths:** 85 mm (3.346") or wider in 85 mm (3.346") increments
- **Working Load (at 25°C/77°F):** 14000 N/m (960 lbs/ft) for UP and DK2™ materials
  10000 N/m (685 lbs/ft) for PP material
- **Belt weight:** 9,55 kg/m² (1.96 lbs/ft²) for UP and DK2™ materials
  6,46 kg/m² (1.32 lbs/ft²) for PP material

DUPONT® KEVLAR® INSIDE

VERSION WITHOUT TRACKING GUIDE

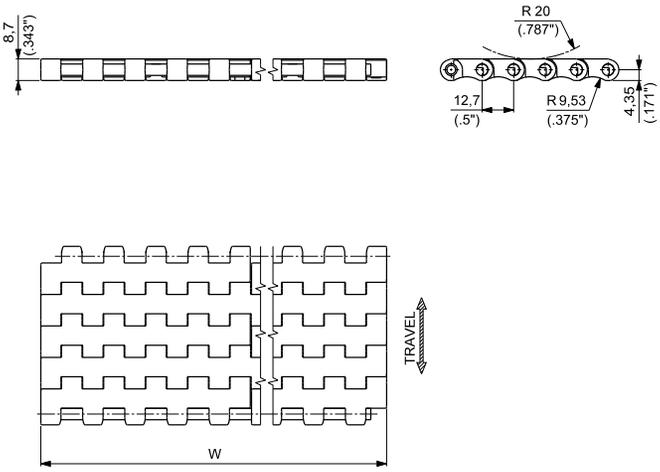

VERSION WITH TRACKING GUIDE

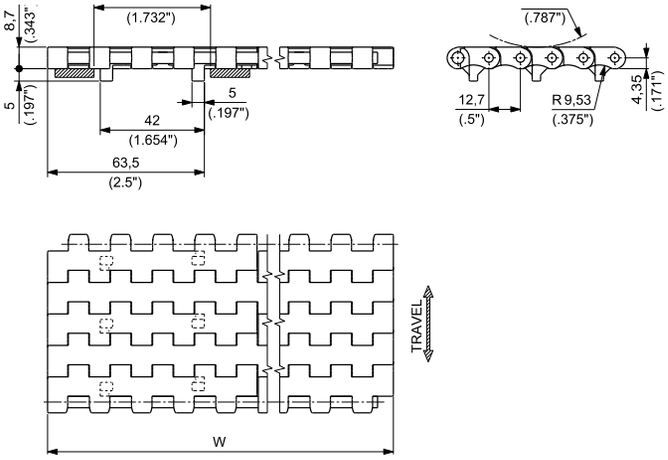

Materials see page 12
Nosebar see page 181
Sprockets see pages 188÷192
Applications see page 22

WIDTH W		MATERIALS						
		Module						Pin
		UP ULTRA PERFORMANCE HOMOPOLYMER DELRIN ®		DK2™ SPECIAL DELRIN ® REINFORCED WITH KEVLAR ®		PP SPECIAL POLYPROPYLENE[1]		
		PART NUMBER		PART NUMBER		PART NUMBER		
mm	inch	WITHOUT TRACKING GUIDE	WITH TRACKING GUIDE	WITHOUT TRACKING GUIDE	WITH TRACKING GUIDE	WITHOUT TRACKING GUIDE	WITH TRACKING GUIDE	
85	3.35	**610AUP0085**	**610AGUP0085**	**610AD2K0085**	**610AGD2K0085**	**610APP0085**	**610AGPP0085**	PBT
170	6.69	**610BUP0170**	**610BG1UP0170**	**610BD2K0170**	**610BG1D2K0170**	**610BPP0170**	**610BG1PP0170**	POLYPROPYLENE (PBT on request)
255	10.04	**610BUP0255**	**610BG1UP0255**	**610BD2K0255**	**610BG1D2K0255**	**610BPP0255**	**610BG1PP0255**	
340	13.39	**610BUP0340**	**610BG1UP0340**	**610BD2K0340**	**610BG1D2K0340**	**610BPP0340**	**610BG1PP0340**	
425	16.73	**610BUP0425**	**610BG1UP0425**	**610BD2K0425**	**610BG1D2K0425**	**610BPP0425**	**610BG1PP0425**	
510	20.08	**610BUP0510**	**610BG1UP0510**	**610BD2K0510**	**610BG1D2K0510**	**610BPP0510**	**610BG1PP0510**	
595	23.43	**610BUP0595**	**610BG1UP0595**	**610BD2K0595**	**610BG1D2K0595**	**610BPP0595**	**610BG1PP0595**	
680	26.77	**610BUP0680**	**610BG1UP0680**	**610BD2K0680**	**610BG1D2K0680**	**610BPP0680**	**610BG1PP0680**	
765	30.12	**610BUP0765**	**610BG1UP0765**	**610BD2K0765**	**610BG1D2K0765**	**610BPP0765**	**610BG1PP0765**	
850	33.46	**610BUP0850**	**610BG1UP0850**	**610BD2K0850**	**610BG1D2K0850**	**610BPP0850**	**610BG1PP0850**	
935	36.81	**610BUP0935**	**610BG1UP0935**	**610BD2K0935**	**610BG1D2K0935**	**610BPP0935**	**610BG1PP0935**	
1020	40.16	**610BUP1020**	**610BG1UP1020**	**610BD2K1020**	**610BG1D2K1020**	**610BPP1020**	**610BG1PP1020**	

[1] ACTUAL WIDTH CAN BE UP TO 1% GREATER THAN NOMINAL WIDTH

Belts wider than 1020 mm (40.16") are available in 85 mm (3.35") increments.
To identify the Part Numbers, please substitute the last four digits of the PN with the desired width.
Example: for a 1105 mm wide belt (=1020+85 mm) without guide, the PN for UP material is "600BUP1105".

Standard packaging:
Belt widths ≤ 680 mm (26.77") are supplied in rolls of 3,048 m (10 ft) each.
Belt widths ≥ 765 mm (30.12") are supplied in the length requested by the customer.

Copyright Regina Catene Calibrate s.p.a. - 2020, All rights reserved

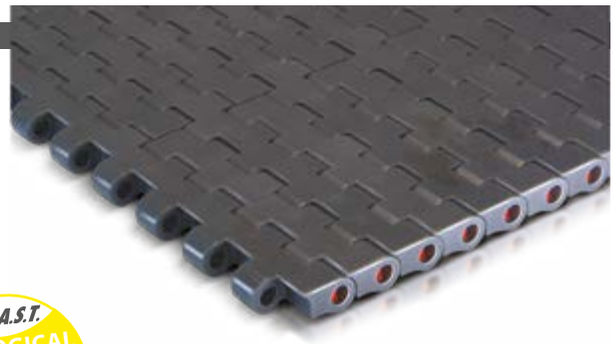

8,7 mm (0.343") THICKNESS
SOLID TOP

The belt offers a completely closed top surface design for an excellent product support without tipping. The round bottom surface combined to the reduced pitch (1/2") provides the minimum chordal effect for an optimum head transfer of products. Particularly suitable for conveyors where a head transfer of products is required.

- **Belt widths:** 85 mm (3.346") or wider in 85 mm (3.346") increments
- **Working Load (at 25°C/77°F):** 14000 N/m (960 lbs/ft) for e-F.A.S.T. material
- **Belt weight:** 9,55 kg/m² (1.95 lbs/ft²) for e-F.A.S.T. material

e-F.A.S.T. ECOLOGICAL FRICTION ABATING THERMO-PLASTIC

VERSION WITHOUT TRACKING GUIDE

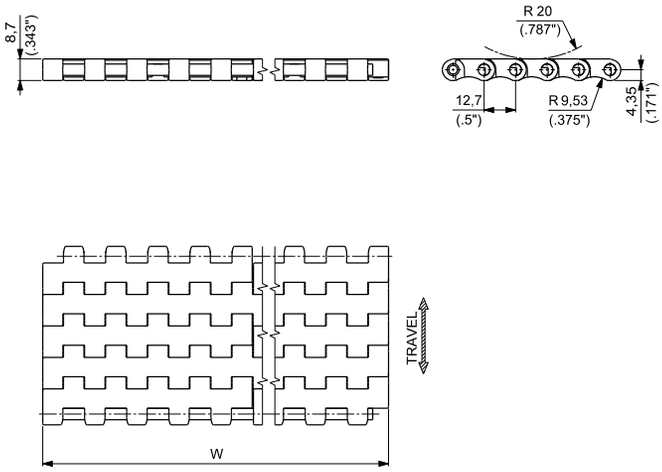

VERSION WITH TRACKING GUIDE

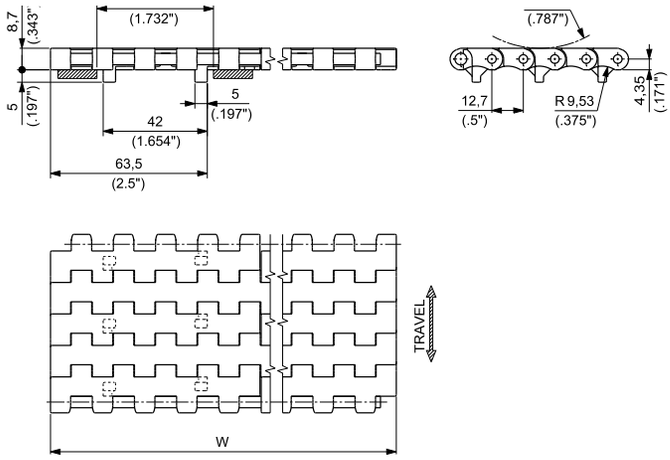

Materials see page 12

Nosebar see page 181

Sprockets see pages 188÷192

Applications see page 22

WIDTH W		MATERIALS		
		NEW e-F.A.S.T. ECOLOGICAL FRICTION ABATING THERMOPLASTIC		Pin
		PART NUMBER		
mm	inch	WITHOUT TRACKING GUIDE	WITH TRACKING GUIDE	
85	3.35	**610AEF0085**	**610AGEF0085**	PBT
170	6.69	**610AEF0170**	**610AG1EF0170**	
255	10.04	**610AEF0255**	**610AG1EF0255**	
340	13.39	**610AEF0340**	**610AG1EF0340**	
425	16.73	**610AEF0425**	**610AG1EF0425**	
510	20.08	**610AEF0510**	**610AG1EF0510**	
595	23.43	**610AEF0595**	**610AG1EF0595**	
680	26.77	**610AEF0680**	**610AG1EF0680**	
765	30.12	**610AEF0765**	**610AG1EF0765**	
850	33.46	**610AEF0850**	**610AG1EF0850**	
935	36.81	**610AEF0935**	**610AG1EF0935**	
1020	40.16	**610AEF1020**	**610AG1EF1020**	

Belts wider than 1020 mm (40.16") are available in 85 mm (3.35") increments.
To identify the Part Numbers, please substitute the last four digits of the PN with the desired width.
Example: for a 1105 mm wide belt (=1020+85 mm) without guide, the PN for EF material is "610AEF1105".

Standard packaging:
Belts widths ≤ 680 mm (26.77") are supplied in rolls of 3,048 m (10 ft) each.
Belts widths ≥ 765 mm (30.12") are supplied in the length requested by the customer.

 Copyright Regina Catene Calibrate s.p.a. - 2020, All rights reserved

8,7 mm (0.343") THICKNESS
FLUSH GRID

Excellent combination of support and open area (21%).
Optimum drainage of liquids and good support of the conveyed products.
Particularly suitable for conveyors where the head transfer of products is required.

- **Belt widths:** 85 mm (3.346") or wider in 85 mm (3.346") increments
- **Working Load (at 25°C/77°F):** 14000 N/m (960 lbs/ft) for UP material
  10000 N/m (685 lbs/ft) for PP material
- **Belt weight:** 7,06 kg/m² (1.45 lbs/ft²) for UP material
  4,76 kg/m² (0.97 lbs/ft²) for PP material

DuPont® KEVLAR® INSIDE

VERSION WITHOUT TRACKING GUIDE

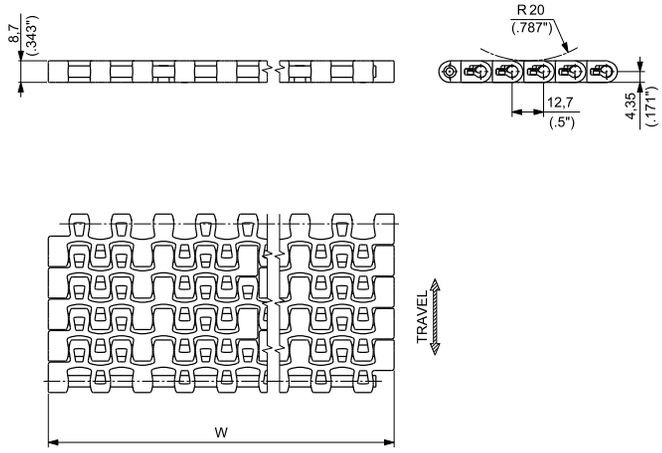

VERSION WITH TRACKING GUIDE

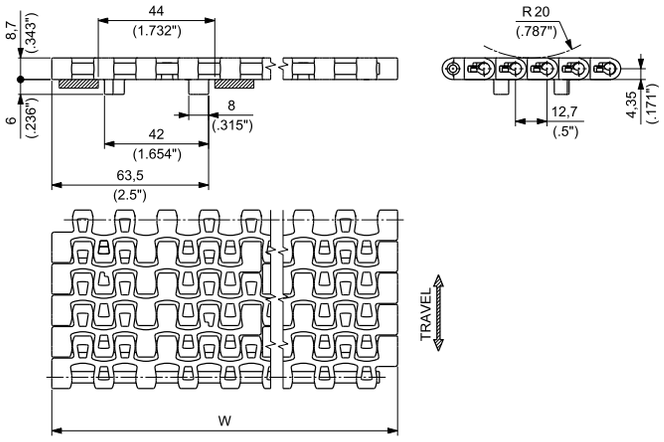

NOTE: The belt is also available with single tracking guide at both belt sides. Please contact REGINA customer service for further information.

Materials see page 12
Nosebar see page 181
Sprockets see pages 188÷192
Applications see page 22

WIDTH W		MATERIALS				
		Module				Pin
		UP ULTRA PERFORMANCE HOMOPOLYMER DELRIN ®		PP SPECIAL POLYPROPYLENE[1]		
		PART NUMBER		PART NUMBER		
mm	inch	WITHOUT TRACKING GUIDE	WITH TRACKING GUIDE	WITHOUT TRACKING GUIDE	WITH TRACKING GUIDE	
85	3.35	**500AUP0085**	**500AGUP0085**	**500APP0085**	**500AGPP0085**	PBT
170	6.69	**500BUP0170**	**500BG1UP0170**	**500BPP0170**	**500BG1PP0170**	POLYPROPYLENE (PBT on request)
255	10.04	**500BUP0255**	**500BG1UP0255**	**500BPP0255**	**500BG1PP0255**	
340	13.39	**500BUP0340**	**500BG1UP0340**	**500BPP0340**	**500BG1PP0340**	
425	16.73	**500BUP0425**	**500BG1UP0425**	**500BPP0425**	**500BG1PP0425**	
510	20.08	**500BUP0510**	**500BG1UP0510**	**500BPP0510**	**500BG1PP0510**	
595	23.43	**500BUP0595**	**500BG1UP0595**	**500BPP0595**	**500BG1PP0595**	
680	26.77	**500BUP0680**	**500BG1UP0680**	**500BPP0680**	**500BG1PP0680**	
765	30.12	**500BUP0765**	**500BG1UP0765**	**500BPP0765**	**500BG1PP0765**	
850	33.46	**500BUP0850**	**500BG1UP0850**	**500BPP0850**	**500BG1PP0850**	
935	36.81	**500BUP0935**	**500BG1UP0935**	**500BPP0935**	**500BG1PP0935**	
1020	40.16	**500BUP1020**	**500BG1UP1020**	**500BPP1020**	**500BG1PP1020**	

[1] ACTUAL WIDTH CAN BE UP TO 1% GREATER THAN NOMINAL WIDTH

Belts wider than 1020 mm (40.16") are available in 85 mm (3.35") increments.
To identify the Part Numbers, please substitute the last four digits of the PN with the desired width.
Example: for a 1105 mm wide belt (=1020+85 mm) without guide, the PN for UP material is "500BUP1105".

Standard packaging:
Belt widths ≤ 680 mm (26.77") are supplied in rolls of 3,048 m (10 ft) each.
Belt widths ≥ 765 mm (30.12") are supplied in the length requested by the customer.

Copyright Regina Catene Calibrate s.p.a. - 2020, All rights reserved

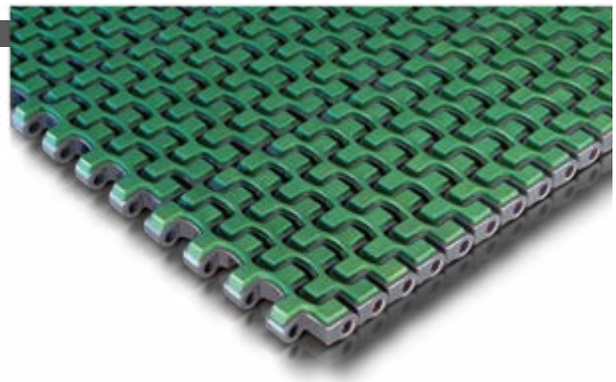

8,7 mm (0.343") THICKNESS RUBBERIZED SURFACE

Belt designed for handling packed containers like boxes, multi packs and cases in packaging lines. It is the optimal solution for high speed stop belts, metering belts, etc. The rubberized area is maximized, both in the transversal and longitudinal direction, reducing gaps between the rubber pads.

- **Belt widths:** 85 mm (3.346") or wider in 85 mm (3.346") increments
- **Working Load (at 25°C/77°F):** 14000 N/m (960 lbs/ft) for ULF material
- **Belt weight:** 9,14 kg/m² (1.87 lbs/ft²) for ULF material

VERSION WITHOUT TRACKING GUIDE

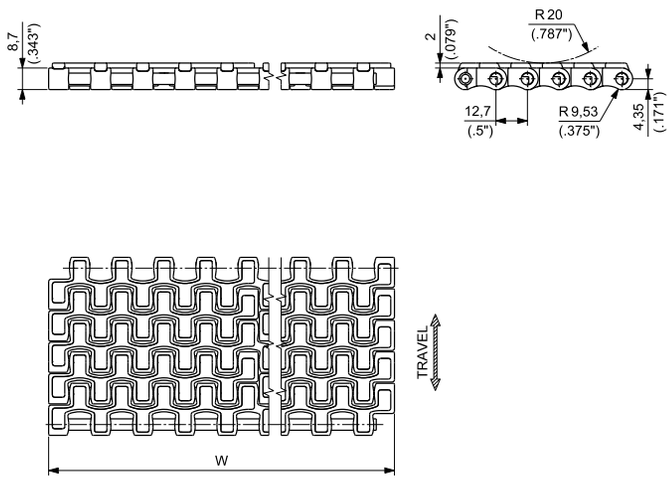

VERSION WITH TRACKING GUIDE

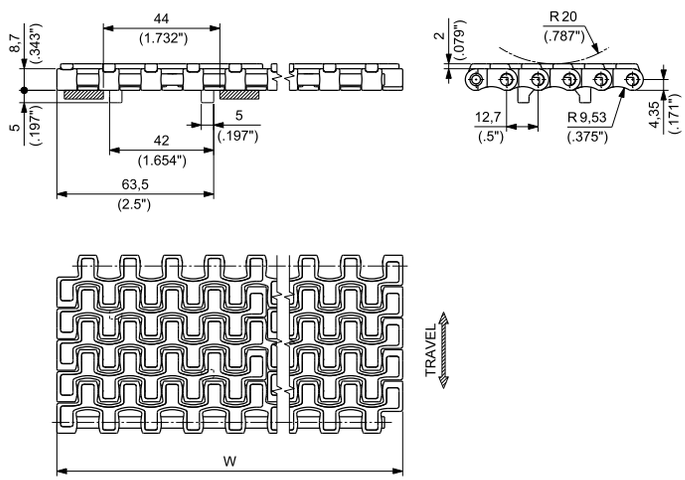

NOTE: The belt is also available with single tracking guide at both belt sides. Please contact REGINA customer service for further information.

Materials see page 12 | Nosebar see page 181 | Sprockets see pages 188÷192 | Applications see page 22

WIDTH W		MATERIALS			
		Module		Rubber	Pin
		ULF ULTRA LOW FRICTION POLYESTER RESIN			
		PART NUMBER			
mm	inch	WITHOUT TRACKING GUIDE	WITH TRACKING GUIDE		
85	3.35	**HF510ULF0085**	**HF510GULF0085**	THERMOPLASTIC TPE Hardness: 55 ShA	POM
170	6.69	**HF510ULF0170**	**HF510G1ULF0170**		
255	10.04	**HF510ULF0255**	**HF510G1ULF0255**		
340	13.39	**HF510ULF0340**	**HF510G1ULF0340**		
425	16.73	**HF510ULF0425**	**HF510G1ULF0425**		
510	20.08	**HF510ULF0510**	**HF510G1ULF0510**		
595	23.43	**HF510ULF0595**	**HF510G1ULF0595**		
680	26.77	**HF510ULF0680**	**HF510G1ULF0680**		
765	30.12	**HF510ULF0765**	**HF510G1ULF0765**		
850	33.46	**HF510ULF0850**	**HF510G1ULF0850**		
935	36.81	**HF510ULF0935**	**HF510G1ULF0935**		
1020	40.16	**HF510ULF1020**	**HF510G1ULF1020**		

Belts wider than 1020 mm (40.16") are available in 85 mm (3.35") increments.
To identify the Part Numbers, please substitute the last four digits of the PN with the desired width.
Example: for a 1105 mm wide belt (=1020+85 mm) without guide, the PN is "HF510ULF1105".
For HF 510 belts in PP material see next page.

Standard packaging:
Belt widths ≤ 170 mm (6.63") are supplied in rolls of 3,048 m (10 ft) each.
Belt widths ≥ 255 mm (10.04") and ≤ 425 mm (16.73") are supplied in rolls of 1,524 m (5 ft) each.
Belt widths ≥ 510 mm (20.08") are supplied in the lenght requested by the customer.

 Copyright Regina Catene Calibrate s.p.a. - 2020, All rights reserved

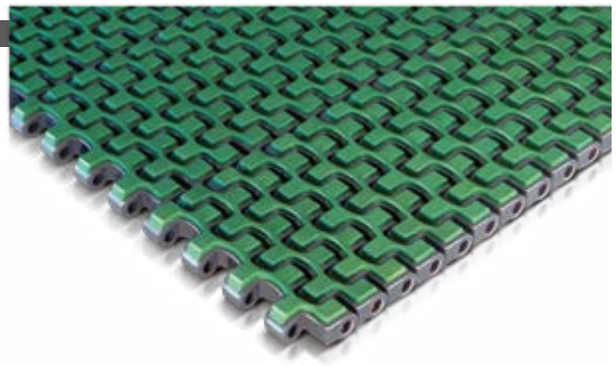

8,7 mm (0.343") THICKNESS RUBBERIZED SURFACE

Belt designed for handling packed containers like boxes, multi packs and cases in packaging lines. It is the optimal solution for high speed stop belts, metering belts, etc. The rubberized area is maximized, both in the transversal and longitudinal direction, reducing gaps between the rubber pads.

- **Belt widths:** 85 mm (3.346")or wider in 85 mm (3.346") increments
- **Working Load (at 25°C/77°F):** 10000 N/m (685 lbs/ft) for PP material
- **Belt weight:** 7,47 kg/m² (1.53 lbs/ft²) for PP material

VERSION WITHOUT TRACKING GUIDE

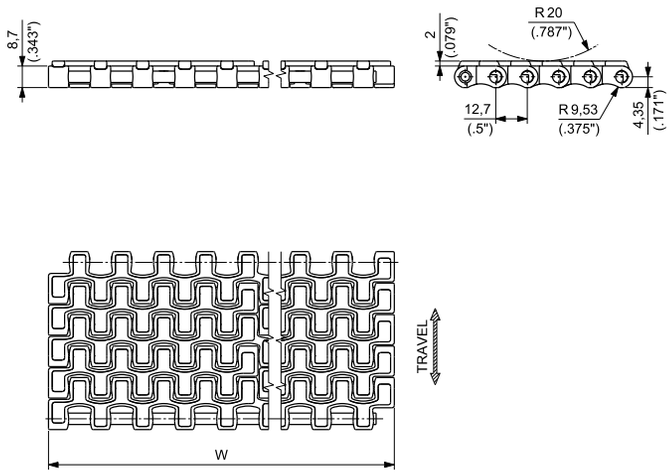

VERSION WITH TRACKING GUIDE

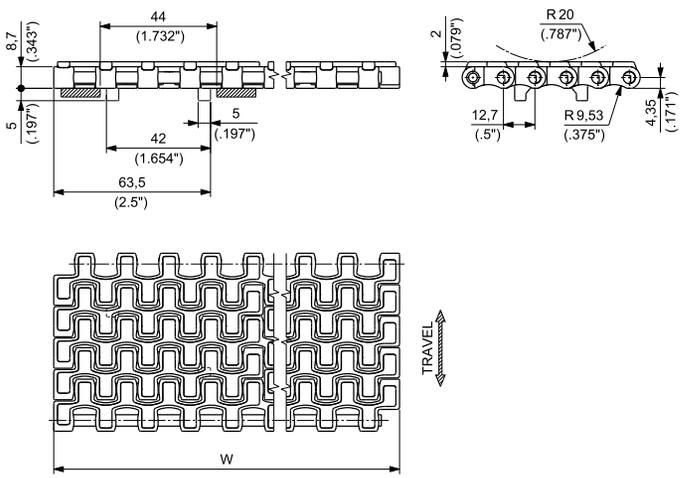

NOTE: The belt is also available with single tracking guide at both belt sides. Please contact REGINA customer service for further information.

Materials see page 12 | Nosebar see page 181 | Sprockets see pages 188÷192 | Applications see page 22

WIDTH W		Module		Rubber	Pin
		PP SPECIAL POLYPROPYLENE[1]			
		PART NUMBER			
mm	inch	WITHOUT TRACKING GUIDE	WITH TRACKING GUIDE		
85	3.35	**HF510APP0085**	**HF510AGPP0085**	THERMOPLASTIC TPE Hardness: 50 ShA	PBT
170	6.69	**HF510APP0170**	**HF510AG1PP0170**		
255	10.04	**HF510APP0255**	**HF510AG1PP0255**		
340	13.39	**HF510APP0340**	**HF510AG1PP0340**		
425	16.73	**HF510APP0425**	**HF510AG1PP0425**		
510	20.08	**HF510APP0510**	**HF510AG1PP0510**		
595	23.43	**HF510APP0595**	**HF510AG1PP0595**		
680	26.77	**HF510APP0680**	**HF510AG1PP0680**		
765	30.12	**HF510APP0765**	**HF510AG1PP0765**		
850	33.46	**HF510APP0850**	**HF510AG1PP0850**		
935	36.81	**HF510APP0935**	**HF510AG1PP0935**		
1020	40.16	**HF510APP1020**	**HF510AG1PP1020**		

[1] ACTUAL WIDTH CAN BE UP TO 1% GREATER THAN NOMINAL WIDTH

Belts wider than 1020 mm (40.16") are available in 85 mm (3.35") increments.
To identify the Part Numbers, please substitute the last four digits of the PN with the desired width.
Example: for a 1105 mm wide belt (=1020+85 mm) without guide, the PN for PP material is "HF510APP1105".
For HF 510 belts in ULF material see previous page.

Standard packaging:
Belt widths ≤ 170 mm (6.63") are supplied in rolls of 3,048 m (10 ft) each.
Belt widths ≥ 255 mm (10.04") and ≤ 425 mm (16.73") are supplied in rolls of 1,524 m (5 ft) each.
Belt widths ≥ 510 mm (20.08") are supplied in the lenght requested by the customer.

Copyright Regina Catene Calibrate s.p.a. - 2020, All rights reserved

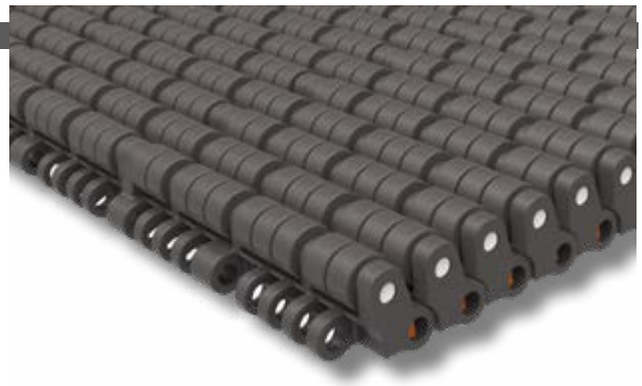

8,7 mm (0.343") THICKNESS LBP ROLLERS

NEW

Designed for accumulating applications where efficient nose-over transfer is required.
The round bottom surface, combined with the ½" pitch, provides the mimimum chordal effect minimizing dead plates.

- **Belt widths:** 85 mm (3.346") or wider in 85 mm (3.346") increments
- **Working Load (at 25°C/77°F):** 27000 N/m (1,850 lbs/ft)
- **Belt weight:** 18,3 kg/m² (3.75 lbs/ft²)

VERSION WITHOUT TRACKING GUIDE

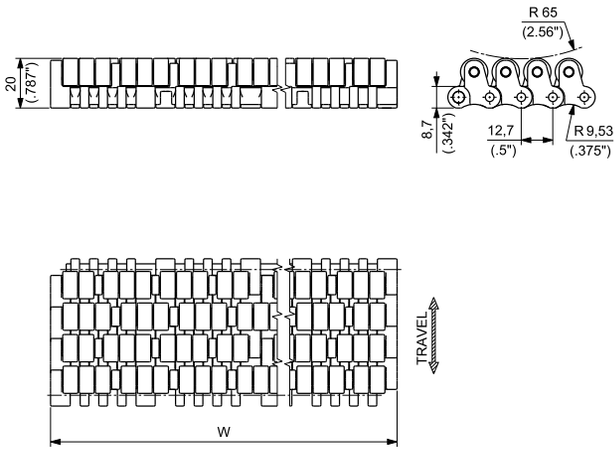

VERSION WITH TRACKING GUIDE

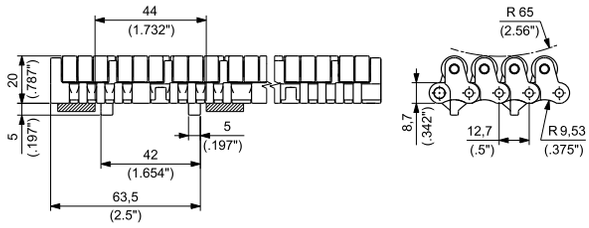

Materials see page 12
Nosebar see page 181
Sprockets see pages 188÷192
Applications see page 22

WIDTH W		MATERIALS		
		Module and Roller		Pin
		UP ULTRA PERFORMANCE HOMOPOLYMER DELRIN ®		
		PART NUMBER		
mm	inch	WITHOUT TRACKING GUIDE	WITH TRACKING GUIDE	
85	3.35	**LBP610AUP0085**	**LBP610AGUP0085**	PBT
170	6.69	**LBP610AUP0170**	**LBP610AG1UP0170**	
255	10.04	**LBP610AUP0255**	**LBP610AG1UP0255**	
340	13.39	**LBP610AUP0340**	**LBP610AG1UP0340**	
425	16.73	**LBP610AUP0425**	**LBP610AG1UP0425**	
510	20.08	**LBP610AUP0510**	**LBP610AG1UP0510**	
595	23.43	**LBP610AUP0595**	**LBP610AG1UP0595**	
680	26.77	**LBP610AUP0680**	**LBP610AG1UP0680**	
765	30.12	**LBP610AUP0765**	**LBP610AG1UP0765**	
850	33.46	**LBP610AUP0850**	**LBP610AG1UP0850**	
935	36.81	**LBP610AUP0935**	**LBP610AG1UP0935**	
1020	40.16	**LBP610AUP1020**	**LBP610AG1UP1020**	

Belts wider than 1020 mm (40.16") are available in 85 mm (3.35") increments.
To identify the Part Numbers, please substitute the last four digits of the PN with the desired width.
Example: for a 1105 mm wide belt (=1020+85 mm) without guide, the PN is "LBP610AUP1105".

Standard packaging:
Belt widths ≤ 680 mm (26.77") are supplied in rolls of 1,524 m (5 ft) each.
Belt widths ≥ 765 mm (30.12") and ≤ 935 mm (36.81") are supplied in rolls of 1,016 m (3.33 ft) each.
Belt widths ≥ 1020 mm (40.16") are supplied in the lenght requested by the customer.

Copyright Regina Catene Calibrate s.p.a. - 2020, All rights reserved

8,7 mm (0.343") THICKNESS
SOLID TOP

The belt offers a completely closed top surface design for an excellent product support without tipping. The round bottom surface combined with the reduced pitch (½") transfer of products.provides the minimal chordal effect for an optimum head transfer of products.

- **Belt widths:** 114,3 mm (4 ½"), 76,2 mm (3") or wider in 76,2 mm (3") increments
- **Working Load (at 25°C/77°F):** 14000 N/m (960 lbs/ft) for UP, DK2™ and e-F.A.S.T. materials
  10000 N/m (685 lbs/ft) for PP materials
- **Belt weight:** 9,52 kg/m² (1.95 lbs/ft²) for UP, DK2™ and e-F.A.S.T. materials
  6,55 kg/m² (1.34 lbs/ft²) for PP material

DUPONT® KEVLAR® INSIDE

e-F.A.S.T. ECOLOGICAL FRICTION ABATING THERMO-PLASTIC

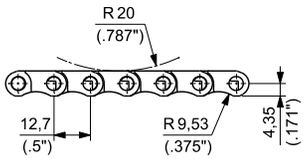

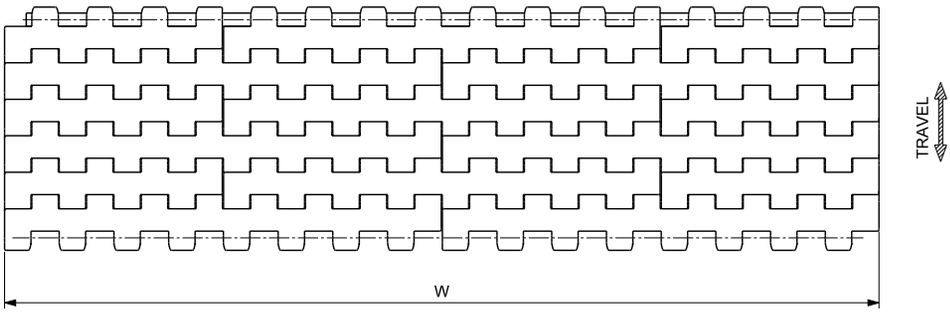

Materials see page 12
Nosebar see page 181
Sprockets see pages 188÷192
Applications see page 22

WIDTH W		MATERIALS				
		Module				Pin
		UP ULTRA PERFORMANCE HOMOPOLYMER DELRIN®	DK2™ SPECIAL DELRIN® REINFORCED WITH KEVLAR®	PP SPECIAL POLYPROPYLENE[1]	e-F.A.S.T. NEW ECOLOGICAL FRICTION ABATING THERMOPLASTIC	
mm	inch	PART NUMBER	PART NUMBER	PART NUMBER	PART NUMBER	
114,3	4.5	**300AUPKG/000**	**300AD2KKG/000**	**300APPKG/000**	**300AEFKG/000**	PBT
76,2	3	**300BUP003**	**300BD2K003**	**300BPP003**	**300AEF003**	PBT for e-F.A.S.T. material POLYPROPYLENE for all other materials (PBT on request for all other materials)
152,4	6	**300BUP006**	**300BD2K006**	**300BPP006**	**300AEF006**	
228,6	9	**300BUP009**	**300BD2K009**	**300BPP009**	**300AEF009**	
304,8	12	**300BUP012**	**300BD2K012**	**300BPP012**	**300AEF012**	
381,0	15	**300BUP015**	**300BD2K015**	**300BPP015**	**300AEF015**	
457,2	18	**300BUP018**	**300BD2K018**	**300BPP018**	**300AEF018**	
533,4	21	**300BUP021**	**300BD2K021**	**300BPP021**	**300AEF021**	
609,6	24	**300BUP024**	**300BD2K024**	**300BPP024**	**300AEF024**	
685,8	27	**300BUP027**	**300BD2K027**	**300BPP027**	**300AEF027**	
762,0	30	**300BUP030**	**300BD2K030**	**300BPP030**	**300AEF030**	
838,2	33	**300BUP033**	**300BD2K033**	**300BPP033**	**300AEF033**	
914,4	36	**300BUP036**	**300BD2K036**	**300BPP036**	**300AEF036**	
990,6	39	**300BUP039**	**300BD2K039**	**300BPP039**	**300AEF039**	

[1] ACTUAL WIDTH CAN BE UP TO 1% GREATER THAN NOMINAL WIDTH

Belts wider than 990,6 mm (39") are available in 76,2 (3") increments.
To identify the Part Numbers, please substitute the last three digits of the PN with the desired width.
Example: for a 42" wide belt (=39+3 inches), the PN for UP material is "300BUP042".

Standard packaging:
114,3 mm (4.5") wide belt is supplied in rolls of 3,048 m (10ft) each.
Other belt widths are supplied in the length requested by the customer.

Copyright Regina Catene Calibrate s.p.a. - 2020, All rights reserved

ACTIVE TRANSFER MODULES
8,7 mm (0.343") THICKNESS
SOLID TOP

Active transfer modules 300G ATM series allow the transfer of the products between two 90° conveyor tracks without using dead plates.
Left and right version in available.

DUPONT® KEVLAR® INSIDE

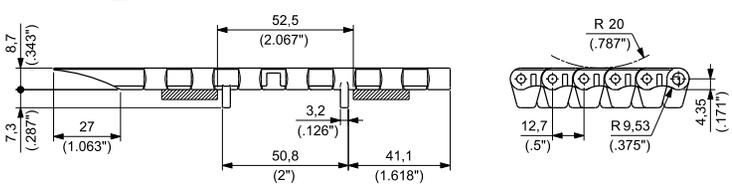

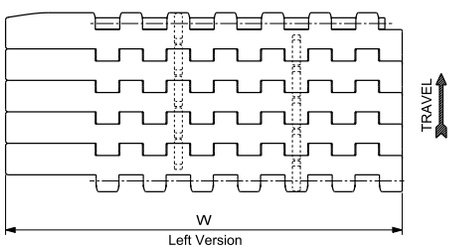

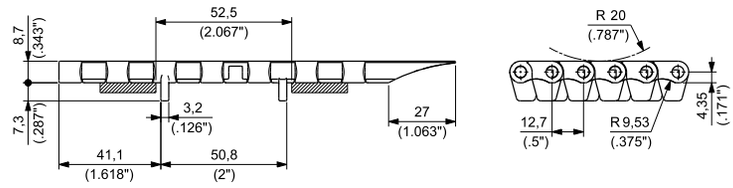

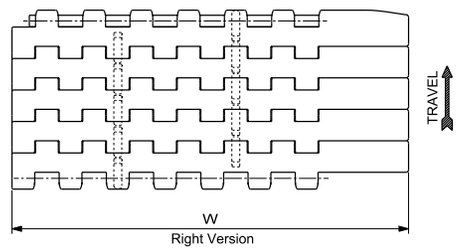

Materials see page 12
Sprockets see pages 188÷192
Applications see page 22

300G ATM - Left Version

MATERIALS Plate	MATERIALS Pin	ITEM DESCRIPTION	PART NUMBER	WIDTH W mm	WIDTH W inch	PLATE THICKNESS mm	PLATE THICKNESS inch	WORKING LOAD (25°C/77°F) N	WORKING LOAD (25°C/77°F) lbs	WEIGHT kg/m	WEIGHT lbs/ft
ULTRA PERFORMANCE HOMOPOLYMER DELRIN ® UP	PBT	300AGATM UP 450 SX	300AGATMUP450LH	160	6.30	8,7	0.343	1190	268	1,42	0.95
SPECIAL DELRIN ® REINFORCED WITH KEVLAR ® DK2™		300AGATM D2K 450 SX	300AGATMD2K450LH	160	6.30	8,7	0.343	1190	268	1,42	0.95

300G ATM - Right Version

MATERIALS Plate	MATERIALS Pin	ITEM DESCRIPTION	PART NUMBER	WIDTH W mm	WIDTH W inch	PLATE THICKNESS mm	PLATE THICKNESS inch	WORKING LOAD (25°C/77°F) N	WORKING LOAD (25°C/77°F) lbs	WEIGHT kg/m	WEIGHT lbs/ft
ULTRA PERFORMANCE HOMOPOLYMER DELRIN ® UP	PBT	300AGATM UP 450 DX	300AGATMUP450RH	160	6.30	8,7	0.343	1190	268	1,42	0.95
SPECIAL DELRIN ® REINFORCED WITH KEVLAR ® DK2™		300AGATM D2K 450 DX	300AGATMD2K450RH	160	6.30	8,7	0.343	1190	268	1,42	0.95

Standard packaging: Rolls of 3,048 m (10 feet)

Copyright Regina Catene Calibrate s.p.a. - 2020, All rights reserved

8,7 mm (0.343") THICKNESS
FLUSH GRID

The belt offers an excellent combination of support and open area for optimal liquid and air flow-through where frequent cleaning is required.

- **Belt widths:** 76,2 mm (3") or wider in 76,2 mm (3") increments
- **Working Load (at 25°C/77°F):** 14000 N/m (960 lbs/ft) for UP material
  10000 N/m (685 lbs/ft) for PP material
- **Belt weight:** 7,60 kg/m² (1.56 lbs/ft²) for UP material
  5,44 kg/m² (1.11 lbs/ft²) for PP material

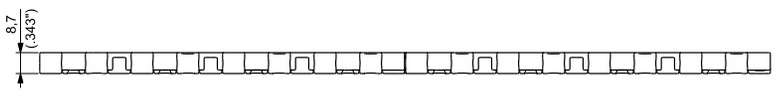

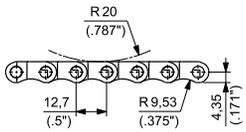

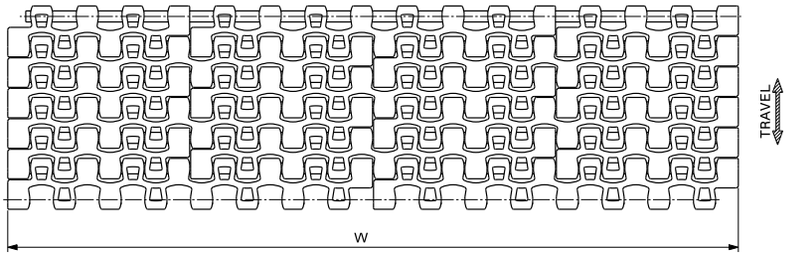

Materials see page 12
Nosebar see page 181
Sprockets see pages 188÷192
Applications see page 22

WIDTH W		MATERIALS		
		Module		Pin
		UP ULTRA PERFORMANCE HOMOPOLYMER DELRIN®	PP SPECIAL POLYPROPYLENE[1]	
		PART NUMBER	PART NUMBER	
76,2	3	**200BUP003**	**200BPP003**	POLYPROPYLENE (PBT on request)
152,4	6	**200BUP006**	**200BPP006**	
228,6	9	**200BUP009**	**200BPP009**	
304,8	12	**200BUP012**	**200BPP012**	
381,0	15	**200BUP015**	**200BPP015**	
457,2	18	**200BUP018**	**200BPP018**	
533,4	21	**200BUP021**	**200BPP021**	
609,6	24	**200BUP024**	**200BPP024**	
685,8	27	**200BUP027**	**200BPP027**	
762,0	30	**200BUP030**	**200BPP030**	
838,2	33	**200BUP033**	**200BPP033**	
914,4	36	**200BUP036**	**200BPP036**	
990,6	39	**200BUP039**	**200BPP039**	

[1] ACTUAL WIDTH CAN BE UP TO 1% GREATER THAN NOMINAL WIDTH

Belts wider than 990,6 mm (39") are available in 76,2 (3") increments.
To identify the Part Numbers, please substitute the last three digits of the PN with the desired width.
Example: for a 42" wide belt (=39+3 inches), the PN for UP material is "200BUP042".

Standard packaging:
Belts are supplied in the length requested by the customer.

Copyright Regina Catene Calibrate s.p.a. - 2020, All rights reserved

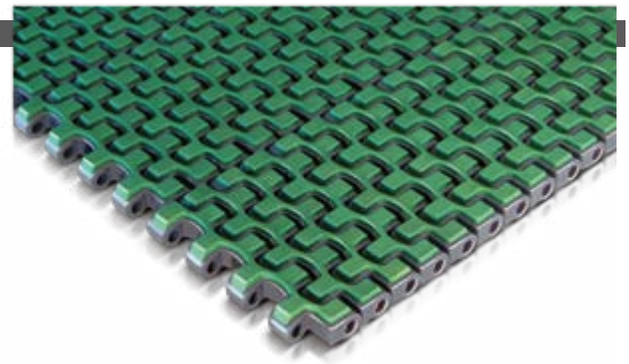

8,7 mm (0.343") THICKNESS RUBBERIZED SURFACE

Belt designed for handling packed containers like boxes, multi packs and cases in packaging lines. It is the optimal solution for high speed stop belts, metering belts, etc. The rubberized area is maximized, both in transversal and longitudinal direction, reducing gaps between the rubber pads.

- **Belt widths:** 76,2 mm (3") or wider in 76,2 mm (3") increments
- **Working Load (at 25°C/77°F):** 14000 N/m (960 lbs/ft) for ULF material
  10000 N/m (685 lbs/ft) for PP material
- **Belt weight:** 8,86 kg/m² (1.81 lbs/ft²) for ULF material
  7,32 kg/m² (1.50 lbs/ft²) for PP material

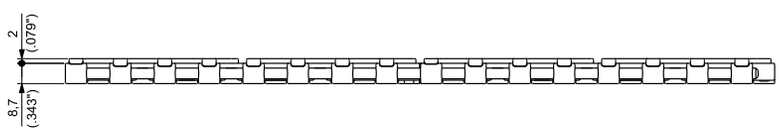

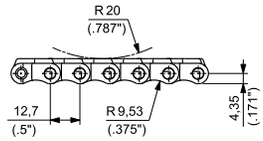

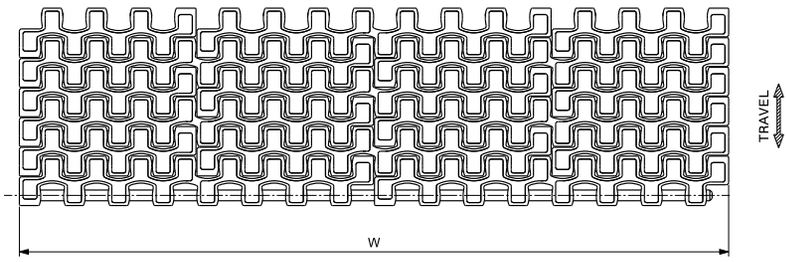

Materials see page 12
Nosebar see page 181
Sprockets see pages 188÷192
Applications see page 22

WIDTH W		MATERIALS			
		Module		Rubber	Pin
		ULF ULTRA LOW FRICTION POLYESTER RESIN	PP SPECIAL POLYPROPYLENE[1]		
		PART NUMBER	PART NUMBER		
76,2	3	**HF200ULF003**	**HF200APP003**	THERMOPLASTIC TPE Hardness: 55 ShA for ULF material 50 ShA for PP material	POM for ULF material PBT for PP material
152,4	6	**HF200ULF006**	**HF200APP006**		
228,6	9	**HF200ULF009**	**HF200APP009**		
304,8	12	**HF200ULF012**	**HF200APP012**		
381,0	15	**HF200ULF015**	**HF200APP015**		
457,2	18	**HF200ULF018**	**HF200APP018**		
533,4	21	**HF200ULF021**	**HF200APP021**		
609,6	24	**HF200ULF024**	**HF200APP024**		
685,8	27	**HF200ULF027**	**HF200APP027**		
762,0	30	**HF200ULF030**	**HF200APP030**		
838,2	33	**HF200ULF033**	**HF200APP033**		
914,4	36	**HF200ULF036**	**HF200APP036**		
990,6	39	**HF200ULF039**	**HF200APP039**		

[1] ACTUAL WIDTH CAN BE UP TO 1% GREATER THAN NOMINAL WIDTH

Belts wider than 990,6 mm (39") are available in 76,2 (3") increments.
To identify the Part Numbers, please substitute the last three digits of the PN with the desired width.
Example: for a 42" wide belt (=39+3 inches), the PN for ULF material is "HF200ULF042".

Standard packaging:
Belts are supplied in the length requested by the customer.

Copyright Regina Catene Calibrate s.p.a. - 2020, All rights reserved

STATIC NOSEBAR FOR END-TO-END TRANSFER

The nosebar is supplied in a machined modular design having an edge curved contour with a radius that fits exactly the ½" pitch belts. The design, combined with UHMWPE material improved with self-lubricating additives, ensures decreased wear of belt and nosebar and consistant low friction. The nosebar is fittable to the conveyor structure with M8 flat head screws (NOT INCLUDED).

MATERIALS

Nosebar: **SUPREME-L** Self-lubricating UHMWPE

WIDTHS W: 3", 85 mm

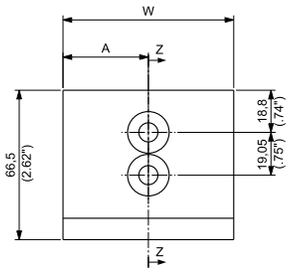

WIDTHS W: 6", 170 mm

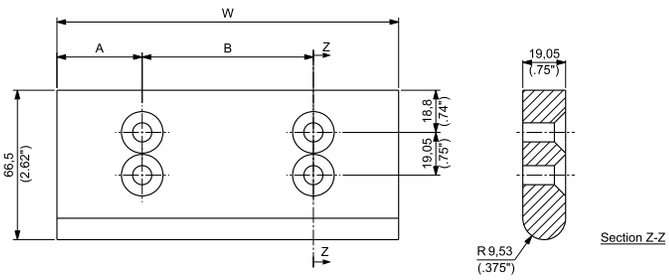

WIDTHS W: 9", 255 mm

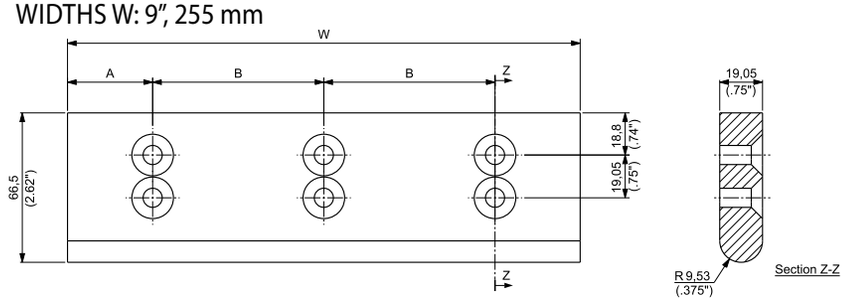

WIDTHS W: 12", 340 mm

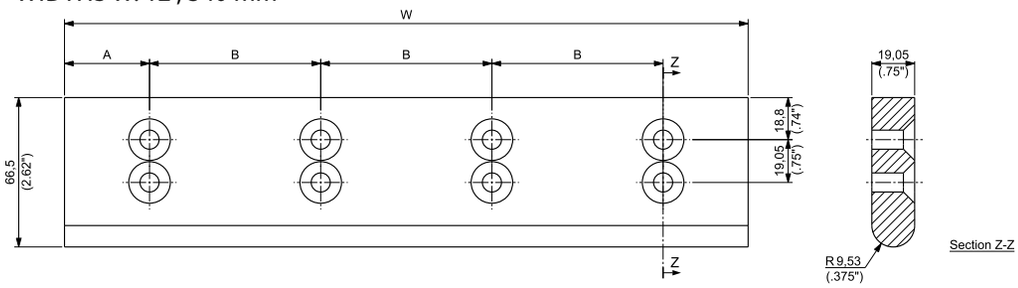

WIDTHS W: 15"

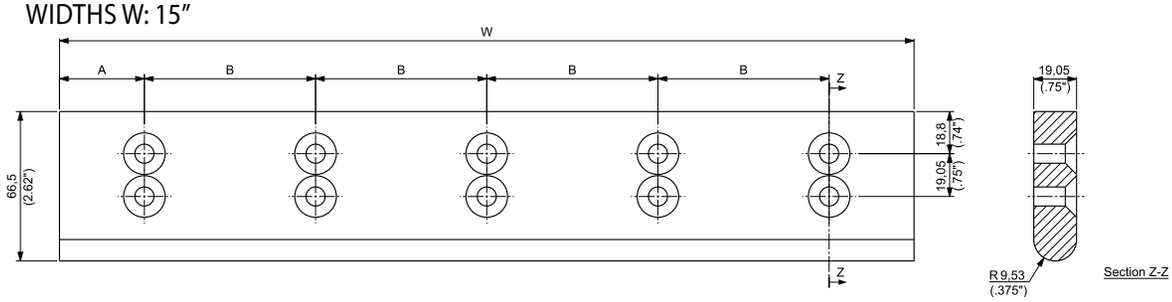

Materials see page 14

PART NUMBER	WIDTH W		A		B		WEIGHT		FOR BELTS SERIES
	mm	inch	mm	inch	mm	inch	kg	lbs	
CC000206	85,0	3.35	42,5	1.67	-	-	0,10	0.22	610 / 600
CC000207	170,0	6.69	42,5	1.67	85,0	3.35	0,19	0.42	LBP 610
CC000208	255,0	10.04	42,5	1.67	85,0	3.35	0,29	0.63	500
CC000209	340,0	13.39	42,5	1.67	85,0	3.35	0,38	0.84	HF 510
CC000201	76,2	3.00	38,1	1.50	-	-	0,09	0.19	
CC000202	152,4	6.00	38,1	1.50	76,2	3.00	0,17	0.37	300
CC000203	228,6	9.00	38,1	1.50	76,2	3.00	0,26	0.56	200
CC000204	304,8	12.00	38,1	1.50	76,2	3.00	0,34	0.75	HF 200
CC000205	381,0	15.00	38,1	1.50	76,2	3.00	0,43	0.94	

Copyright Regina Catene Calibrate s.p.a. - 2020, All rights reserved

INDUSTRIES AND APPLICATIONS

611 and RR 611 series comprise conveyor chains dedicated to the product dynamic dividing area of packaging machines. In this area, individual containers (made of plastic, metal or glass) are conveyed to the pack formation area, where the containers are clustered in the required format by dividing bars, electronically synchronized with the conveyor chains.

INDUSTRIES

Bottling and canning

Food filling

Container manufacturing

Pharmaceutical

Paper/cardboard

Consumer goods

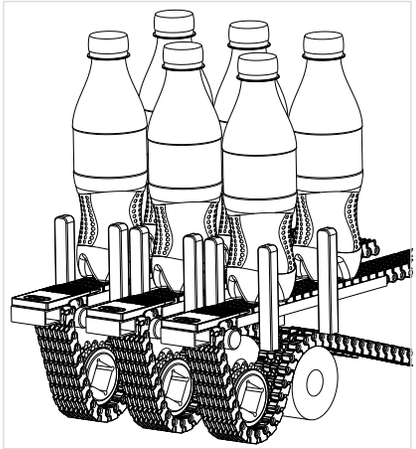

FEATURES

- 1/2" pitch combined with curved bottom contour provides chordal effect minimization, down to 0,15 mm with a 3/4" diameter nosebar, maximizing product stability during travel and head transfer.

- Raised rib surface with special "Z" design (RR611 series) allows the best support for the most unstable products like PET bottles with petaloid bottom.

- Clipless assembly of the modules, easing chain installation on the machines with no risk of pin disassembly in application.

- The most complete range of 1/2" pitch narrow chains available on the market, with widths that range from 29 mm to 76,2 mm, that makes possible conveying all type of containers.

Copyright Regina Catene Calibrate s.p.a. - 2020, All rights reserved

8,7 mm (0.343") THICKNESS
SOLID TOP

NEW

½" pitch chain, combined with curved bottom contour provides chordal effect minimization, down to 0,15 mm with a ¾" diameter nosebar, with the maximization of product stability during travel and head transfer.

VERSION WITHOUT TRACKING GUIDE

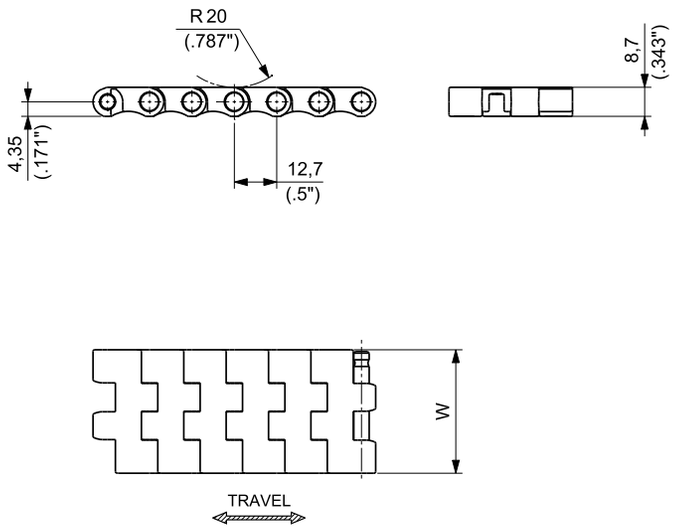

VERSION WITH TRACKING GUIDE

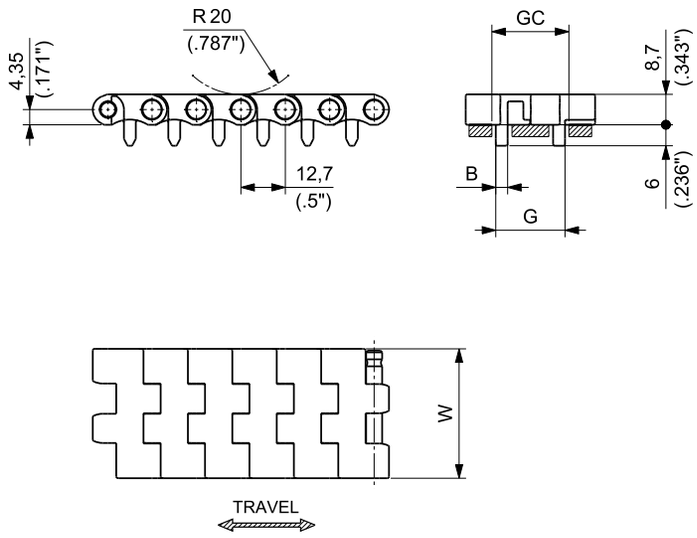

Materials see page 12
Sprockets see pages 186÷191
Applications see page 22

MATERIALS Plate	MATERIALS Pin	VERSION	ITEM DESCRIPTION	PART NUMBER	WIDTH W mm	WIDTH W inch	GUIDE TRACK GC mm	GUIDE TRACK GC inch	INTERNAL GUIDE G mm	INTERNAL GUIDE G inch	TRACKING GUIDE THICKNESS B mm	TRACKING GUIDE THICKNESS B inch	WORKING LOAD (25°C/77°F) N	WORKING LOAD (25°C/77°F) lbs	WEIGHT kg/m	WEIGHT lbs/ft
ULTRA PERFORMANCE HOMOPOLYMER DELRIN ® UP	PBT	WITHOUT TRACKING GUIDE	611A UP K 34	**611AUPKAA/000**	34	1.34	-	-	-	-	-	-	570	128	0,32	0.22
			611A UP K 37	**611AUPKAD/000**	37	1.46	-	-	-	-	-	-	570	128	0,35	0.24
			611A UP K 51	**611AUPKB/000**	51	2.01	-	-	-	-	-	-	570	128	0,49	0.33
			611A UP K 76	**611AUPKDA/000**	76	2.99	-	-	-	-	-	-	1.067	240	0,75	0.50
		WITH TRACKING GUIDE	611AG UP K 29	**611AGUPKWB/000**	29	1.14	21,8	0.86	19,8	0.79	3,40	0.134	570	128	0,29	0.19
			611AG UP K 34	**611AGUPKAA/000**	34	1.34	21,8	0.86	19,8	0.79	3,40	0.630	570	128	0,34	0.23
			611AG UP K 37	**611AGUPKAD/000**	37	1.46	21,8	0.86	19,8	0.79	3,40	0.630	570	128	0,37	0.25
			611AG UP K 51	**611AGUPKB/000**	51	2.01	37,8	1.49	35,8	1.41	5,00	0.926	570	128	0,52	0.35
			611AG UP K 76	**611AGUPKDA/000**	76	2.99	45,0	1.78	43,0	1.69	5,25	0.207	1.067	240	0,77	0.52

Standard packaging: Rolls of 3,048 m (10 feet)

Copyright Regina Catene Calibrate s.p.a. - 2020, All rights reserved

8,7 mm (0.343") THICKNESS
RAISED RIB

NEW

Raised rib surface with special "Z" design guarantees the best support for the most unstable products like PET bottles with petaloid base.

VERSION WITHOUT TRACKING GUIDE

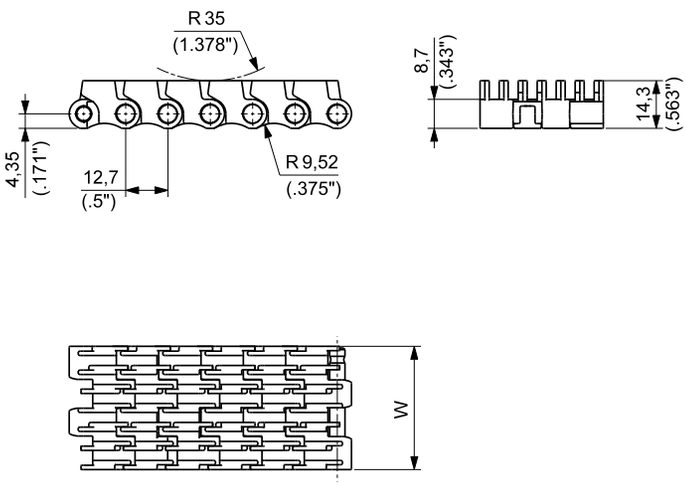

VERSION WITH TRACKING GUIDE

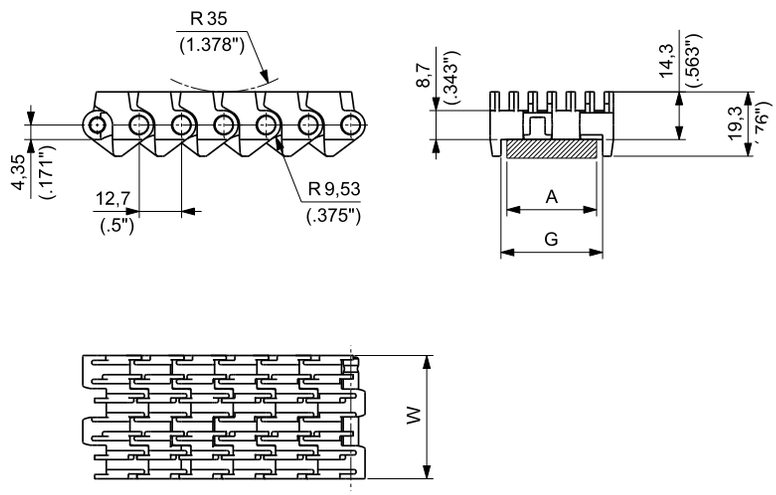

Materials see page 12
Combs see page 185
Sprockets see pages 188÷191
Applications see page 22

MATERIALS Plate	MATERIALS Pin	VERSION	ITEM DESCRIPTION	PART NUMBER	WIDTH W mm	WIDTH W inch	INTERNAL GUIDE G mm	INTERNAL GUIDE G inch	GUIDE TRACK A mm	GUIDE TRACK A inch	WORKING LOAD (25°C/77°F) N	WORKING LOAD (25°C/77°F) lbs	WEIGHT kg/m	WEIGHT lbs/ft
ULTRA PERFORMANCE HOMOPOLYMER DELRIN ® UP	PBT	WITHOUT TRACKING GUIDE	RR611A UP K 29	**RR611AUPKWB/000**	29	1.14	-	-	-	-	570	128	0,37	0.25
			RR611A UP K 37	**RR611AUPKAD/000**	37	1.46	-	-	-	-	570	128	0,47	0.32
			RR611A UP K 46	**RR611AUPKNA/000**	46	1.81	-	-	-	-	570	128	0,57	0.38
			RR611A UP K 55	**RR611AUPKCB/000**	55	2.17	-	-	-	-	570	128	0,69	0.46
			RR611A UP K 76	**RR611AUPKDA/000**	76	2.99	-	-	-	-	1067	240	0,75	0.50
		WITH TRACKING GUIDE	RR611AG UP K 37	**RR611AGUPKAD/000**	37	1.46	30,5	1.20	30	1.18	570	128	0,50	0.34

Standard packaging:
Rolls of 3,048 m (10 feet)

Copyright Regina Catene Calibrate s.p.a. - 2020, All rights reserved

TRANSFER COMBS

NEW

Combs are supplied complete with slot covers but without fastening screws.
One M5 hexagon socket contersunk head screw (NOT INCLUDED) is required for each comb.

MATERIALS

COMBS: **UP** ULTRA PERFORMANCE HOMOPOLYMER DELRIN ®

COMB FOR K 29 CHAIN

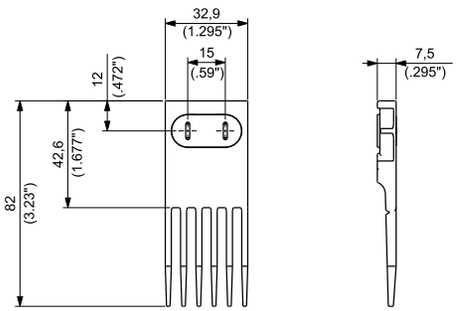

PART NUMBER **TC611-01**

COMB FOR K 37 CHAIN

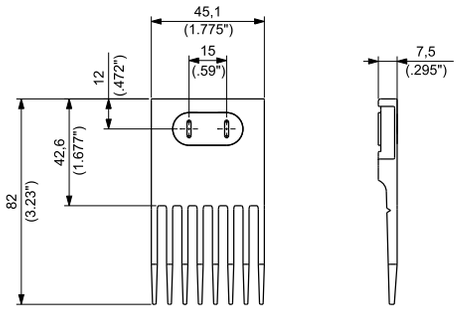

PART NUMBER **TC611-03**

COMB FOR K 46 CHAIN

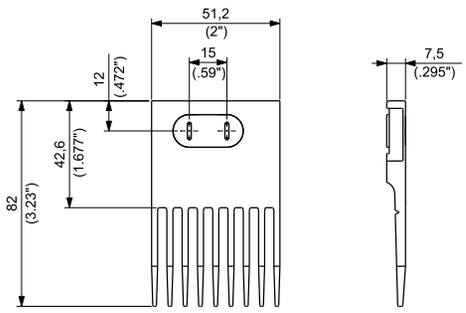

PART NUMBER **TC611-04**

COMB FOR K 55 CHAIN

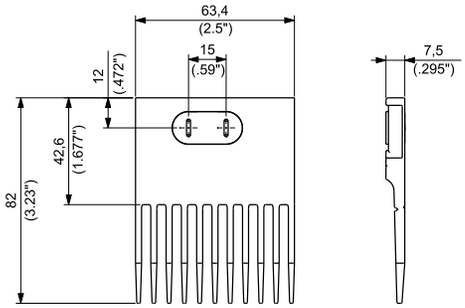

PART NUMBER **TC611-06**

COMB FOR K 76 CHAIN

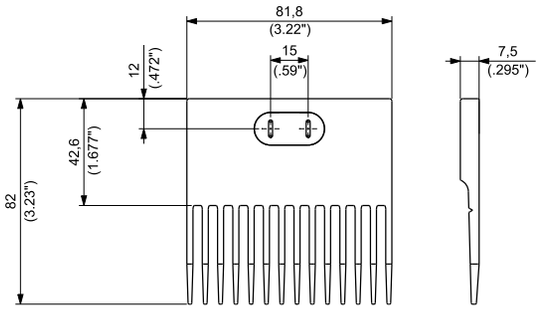

PART NUMBER **TC611-07**

Copyright Regina Catene Calibrate s.p.a. - 2020, All rights reserved

SUITABLE FOR CHAINS:

- **611 WITH TRACKING GUIDE (29 mm, 34 mm, 37 mm WIDTHS ONLY)**

MATERIALS		
SPROCKETS:	PGF	REINFORCED POLYAMIDE
SCREWS*:	SS	STAINLESS STEEL
NUTS*:	ZN	ZINC PLATED STEEL

* For split sprockets only.

16T SPROCKET

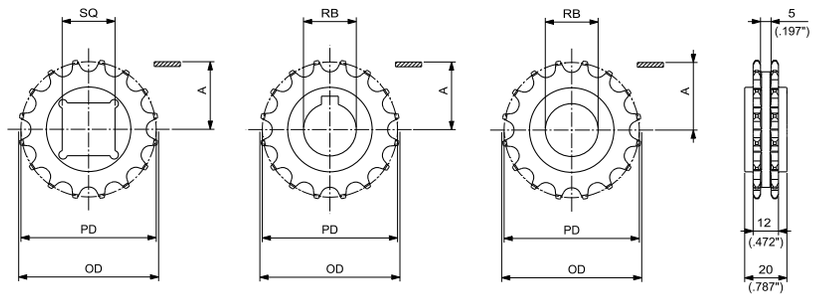

SQUARE BORE - DRIVE/IDLER ROUND BORE - DRIVE ROUND BORE - IDLER

28T SPROCKET

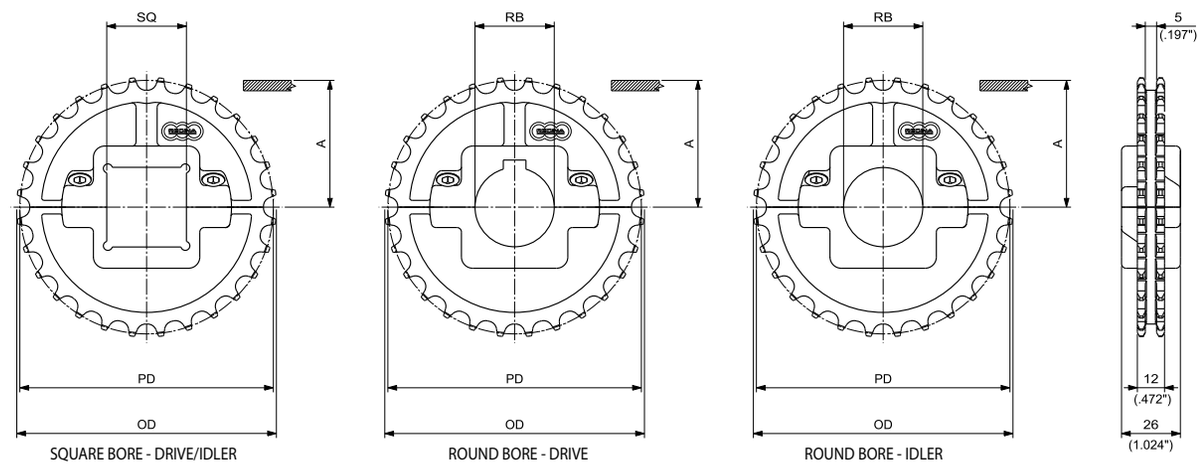

SQUARE BORE - DRIVE/IDLER ROUND BORE - DRIVE ROUND BORE - IDLER

MOULDED SOLID DRIVE AND IDLER SPROCKETS

N. TEETH	PITCH DIAMETER PD		OUTSIDE DIAMETER OD		WEAR STRIP POSITIONING A		BORE SIZE*		PART NUMBER SQUARE BORE SQ	PART NUMBER ROUND BORE RB		WEIGHT	
	mm	inch	mm	inch	mm	inch	mm	inch	DRIVE/IDLER	DRIVE	IDLER	Kg	lbs
16	65,10	2.563	66,30	2.610	28,20	1.110	20			**MPBT6111620**	**MPBF6111620**	0,05	0.11
							25		**MPBQ6111625**	**MPBT6111625**	**MPBF6111625**	0,04	0.09
							30			**MPBT6111630**	**MPBF6111630**	0,04	0.09
								1		**MPBT61116254**	**MPBF61116254**	0,04	0.09
								1¼		**MPBT61116317**	**MPBF61116317**	0,03	0.07

MOULDED SPLIT DRIVE AND IDLER SPROCKETS

N. TEETH	PITCH DIAMETER PD		OUTSIDE DIAMETER OD		WEAR STRIP POSITIONING A		BORE SIZE*		PART NUMBER SQUARE BORE SQ	PART NUMBER ROUND BORE RB		WEIGHT	
	mm	inch	mm	inch	mm	inch	mm	inch**	DRIVE/IDLER	DRIVE	IDLER	Kg	lbs
28	113,43	4.466	114,70	4.516	52,40	2.063	25			**MPBST6112825**	**MPBSF6112825**	0,15	0.33
							30			**MPBST6112830**	**MPBSF6112830**	0,15	0.33
							35			**MPBST6112835**	**MPBSF6112835**	0,14	0.31
							40		**MPBSQ6112840**	**MPBST6112840**	**MPBSF6112840**	0,13	0.29
								1		**MPBST61128254**	**MPBSF61128254**	0,15	0.33
								1¼		**MPBST61128317**	**MPBSF61128317**	0,14	0.31
								1½	**MPBSQ61128381**	**MPBST61128381**	**MPBSF61128381**	0,14	0.31

*In case of round bore, diameter is indicated. In case of square bore, side of the square is indicated.
** Imperial round bore drive sprockets are supplied with setscrew. Metric round bore drive sprockets are supplied without setscrew.

Copyright Regina Catene Calibrate s.p.a. - 2020, All rights reserved

SUITABLE FOR CHAINS:

- **611 WITH TRACKING GUIDE (29 mm, 34 mm, 37 mm WIDTHS ONLY)**

MATERIALS

SPROCKETS: **PA** POLYAMIDE

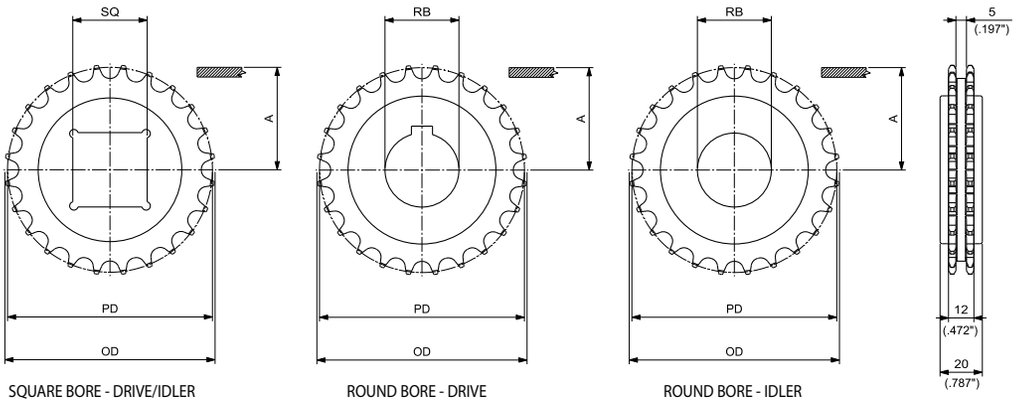

SQUARE BORE - DRIVE/IDLER ROUND BORE - DRIVE ROUND BORE - IDLER

MACHINED SOLID DRIVE AND IDLER SPROCKETS

N. TEETH	PITCH DIAMETER PD		OUTSIDE DIAMETER OD		WEAR STRIP POSITIONING A		BORE SIZE*		PART NUMBER SQUARE BORE SQ	PART NUMBER ROUND BORE RB		WEIGHT	
	mm	inch	mm	inch	mm	inch	mm	inch**	DRIVE/IDLER	DRIVE	IDLER	Kg	lbs
							25			**MPBAT6112425**	**MPBAF6112425**	0,10	0.22
							30			**MPBAT6112430**	**MPBAF6112430**	0,09	0.20
							35			**MPBAT6112435**	**MPBAF6112435**	0,09	0.20
24	97,30	3.831	99,50	3.917	44,30	1.744	40		**MPBAQ6112440**	**MPBAT6112440**	**MPBAF6112440**	0,08	0.18
								1		**MPBAT61124254**	**MPBAF61124254**	0,10	0.22
								1¼		**MPBAT61124317**	**MPBAF61124317**	0,10	0.22
								1½	**MPBAQ61124381**	**MPBAT61124381**	**MPBAF61124381**	0,09	0.20

*In case of round bore, diameter is indicated. In case of square bore, side of the square is indicated.
** Imperial round bore drive sprockets are supplied with setscrew. Metric round bore drive sprockets are supplied without setscrew.

Copyright Regina Catene Calibrate s.p.a. - 2020, All rights reserved

SUITABLE FOR CHAINS:

- **600 / 610 / LBP 610**
- **500 / HF 510**
- **300**
- **200 / HF 200**
- **611 WITHOUT TRACKING GUIDE (ALL WIDTHS)**
- **611 WITH TRACKING GUIDE (51 mm, 76 mm WIDTHS ONLY)**
- **RR 611 (ALL WIDTHS)**

MATERIALS

SPROCKETS: **PGF** REINFORCED POLYAMIDE

16T SPROCKET

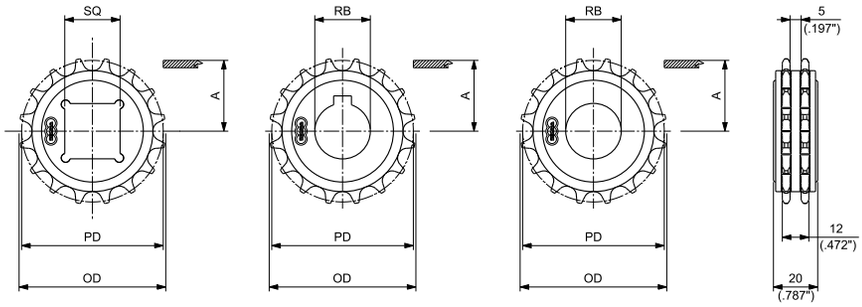

SQUARE BORE - DRIVE/IDLER ROUND BORE - DRIVE ROUND BORE - IDLER

28T SPROCKET

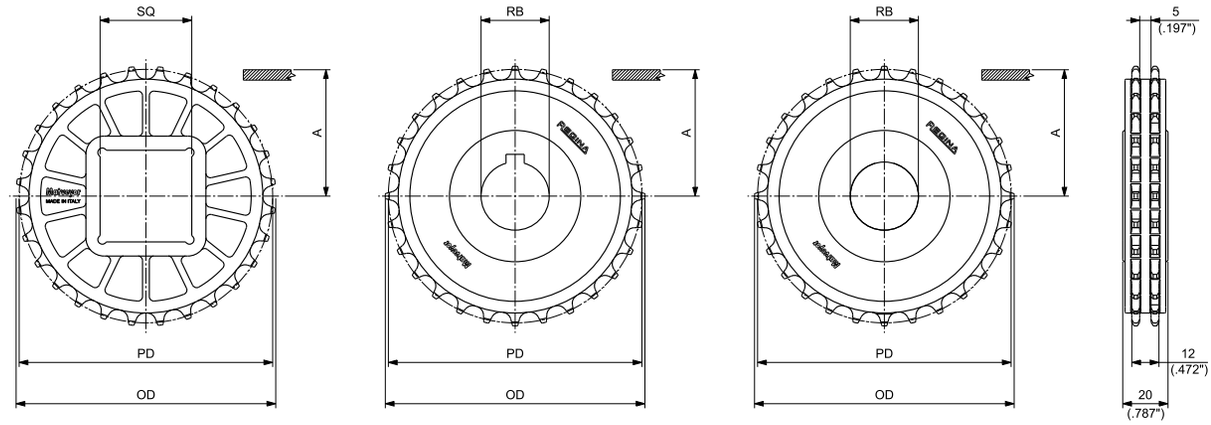

SQUARE BORE - DRIVE/IDLER ROUND BORE - DRIVE ROUND BORE - IDLER

MOULDED SOLID DRIVE AND IDLER SPROCKETS

N. TEETH	PITCH DIAMETER PD		OUTSIDE DIAMETER OD		WEAR STRIP POSITIONING A		BORE SIZE*		PART NUMBER SQUARE BORE SQ	PART NUMBER ROUND BORE RB		WEIGHT	
	mm	inch	mm	inch	mm	inch	mm	inch	DRIVE/IDLER	DRIVE	IDLER	Kg	lbs
16	65,10	2.563	66,30	2.610	28,20	1.110	20			**MPBT6001620**	**MPBF6001620**	0,06	0.13
							25		**MPBQ6001625**	**MPBT6001625**	**MPBF6001625**	0,05	0.12
							30			**MPBT6001630**	**MPBF6001630**	0,05	0.10
								1		MPBT60016254	MPBF60016254	0,05	0.12
								1¼		MPBT60016317	MPBF60016317	0,04	0.10
28	113,43	4.466	114,70	4.516	52,40	2.063	25			**MPBT6002825**	**MPBF6002825**	0,15	0.32
							30			**MPBT6002830**	**MPBF6002830**	0,14	0.31
							35			**MPBT6002835**	**MPBF6002835**	0,13	0.29
							40		**MPBQ6002840**	**MPBT6002840**	**MPBF6002840**	0,12	0.27
							60		**MPBQ6002860**			0,10	0.23
								1		MPBT60028254	MPBF60028254	0,15	0.32
								1¼		MPBT60028317	MPBF60028317	0,14	0.30
								1½	MPBQ60028381	MPBT60028381	MPBF60028381	0,13	0.28

*In case of round bore, diameter is indicated. In case of square bore, side of the square is indicated.

Copyright Regina Catene Calibrate s.p.a. - 2020, All rights reserved

SUITABLE FOR CHAINS:

- **600 / 610 / LBP 610**
- **500 / HF 510**
- **300**
- **200 / HF 200**
- **611 WITHOUT TRACKING GUIDE (ALL WIDTHS)**
- **611 WITH TRACKING GUIDE (51 mm, 76 mm WIDTHS ONLY)**
- **RR 611 (ALL WIDTHS)**

MATERIALS		
SPROCKETS:	**PA**	POLYAMIDE

8T SPROCKET

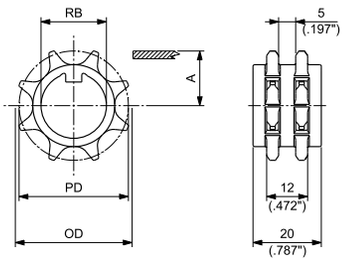

NOTE: CANNOT WORK WITH 600 AND 500 SERIES

14T - 19T SPROCKET

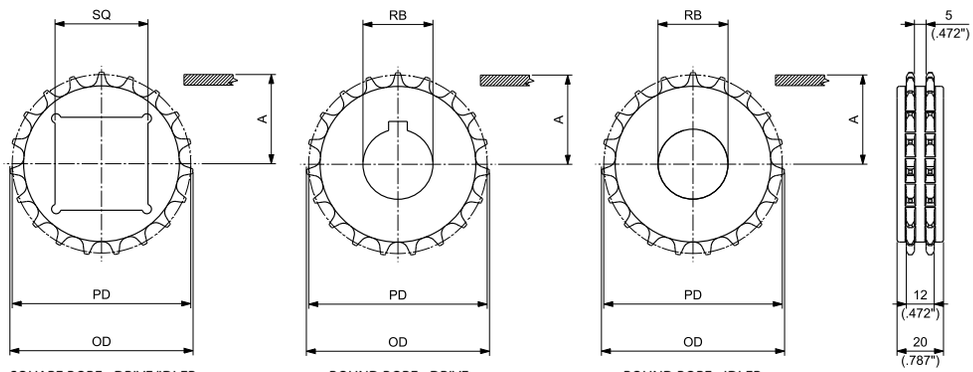

SQUARE BORE - DRIVE/IDLER ROUND BORE - DRIVE ROUND BORE - IDLER

MACHINED SOLID DRIVE AND IDLER SPROCKETS

N. TEETH	PITCH DIAMETER PD		OUTSIDE DIAMETER OD		WEAR STRIP POSITIONING A		BORE SIZE*		PART NUMBER SQUARE BORE SQ	PART NUMBER ROUND BORE RB		WEIGHT	
	mm	inch	mm	inch	mm	inch	mm	inch**	DRIVE/IDLER	DRIVE	IDLER	Kg	lbs
NEW 8(1)	33,19	1.307	34,20	1.346	12,25	0.482	20			**MPBAT6000820**	**MPBAF6000820**	0,01	0,01
								¾		MPBAT60008190	MPBAF60008190	0,01	0,01
NEW 14	57,07	2.247	59,00	2.323	24,18	0.952	25		**MPBAQ6001425**	**MPBAT6001425**	**MPBAF6001425**	0,03	0.06
								1		MPBAT60014254	MPBAF60014254	0,03	0.06
19	77,15	3.037	78,80	3.102	34,20	1.346	25			**MPBAT6001925**	**MPBAF6001925**	0,07	0.16
							30			**MPBAT6001930**	**MPBAF6001930**	0,07	0.15
							35			**MPBAT6001935**	**MPBAF6001935**	0,06	0.13
							40		**MPBAQ6001940**	**MPBAT6001940**	**MPBAF6001940**	0,05	0.12
								1		MPBAT60019254	MPBAF60019254	0,07	0.16
								1¼		MPBAT60019317	MPBAF60019317	0,07	0.14
								1½	MPBAQ60019381			0,05	0.11

*In case of round bore, diameter is indicated. In case of square bore, side of the square is indicated.
** Imperial round bore drive sprockets are supplied with setscrew (except for 8T sprocket). Metric round bore drive sprockets are supplied without setscrew.
(1) Cannot work with 600 and 500 series.

Copyright Regina Catene Calibrate s.p.a. - 2020, All rights reserved

SUITABLE FOR CHAINS:

- **600 / 610 / LBP 610**
- **500 / HF 510**
- **300**
- **200 / HF 200**
- **611 WITHOUT TRACKING GUIDE (ALL WIDTHS)**
- **611 WITH TRACKING GUIDE (51 mm, 76 mm WIDTHS ONLY)**
- **RR 611 (ALL WIDTHS)**

MATERIALS		
SPROCKETS:	PGF	REINFORCED POLYAMIDE
SCREWS:	SS	STAINLESS STEEL
NUTS:	ZN	ZINC PLATED STEEL

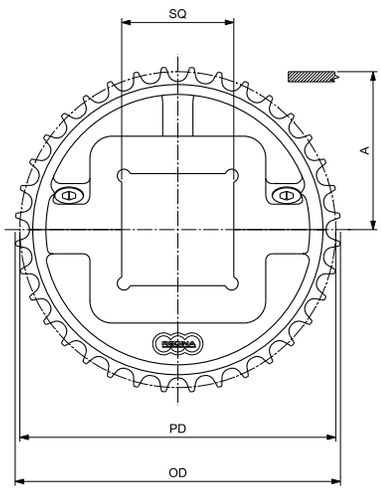

SQUARE BORE - DRIVE/IDLER

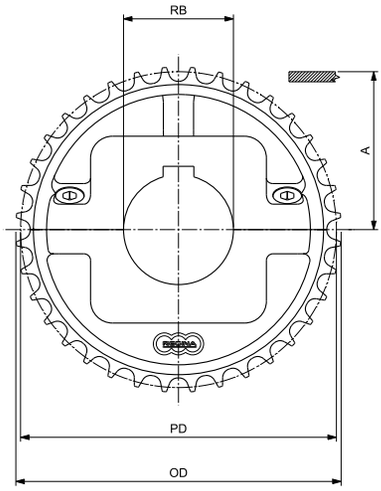

ROUND BORE - DRIVE

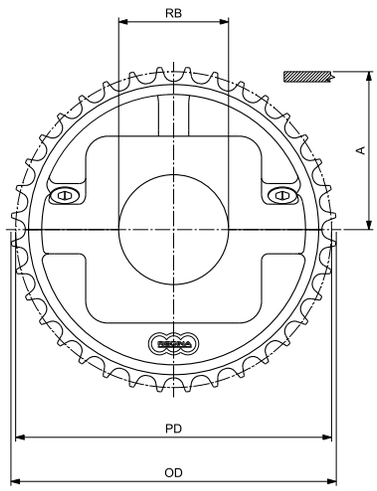

ROUND BORE - IDLER

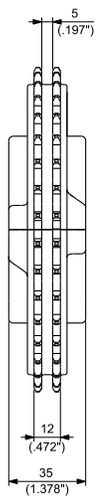

NOTE: FOR 28T SPROCKET, THE HUB WIDTH IS 26 mm (1.024")

MOULDED SPLIT DRIVE AND IDLER SPROCKETS

N. TEETH	PITCH DIAMETER PD		OUTSIDE DIAMETER OD		WEAR STRIP POSITIONING A		BORE SIZE*		PART NUMBER SQUARE BORE SQ	PART NUMBER ROUND BORE RB		WEIGHT	
	mm	inch	mm	inch	mm	inch	mm	inch**	DRIVE/IDLER	DRIVE	IDLER	Kg	lbs
							25			**MPBST6002825**	**MPBSF6002825**	0,16	0.35
							30			**MPBST6002830**	**MPBSF6002830**	0,16	0.34
NEW							35			**MPBST6002835**	**MPBSF6002835**	0,15	0.33
28	113,43	4.466	114,69	4.515	52,40	2.063	40		**MPBSQ6002840**	**MPBST6002840**	**MPBSF6002840**	0,14	0.32
								1		MPBST60028254	MPBSF60028254	0,16	0.35
								1¼		MPBST60028317	MPBSF60028317	0,15	0.34
								1½	MPBSQ60028381	MPBST60028381	MPBSF60028381	0,15	0.32
							30			**MPBST6003630**	**MPBSF6003630**	0,38	0.83
							35			**MPBST6003635**	**MPBSF6003635**	0,37	0.82
							40		**MPBSQ6003640**	**MPBST6003640**	**MPBSF6003640**	0,36	0.80
							45			**MPBST6003645**	**MPBSF6003645**	0,35	0.78
36	145,69	5.736	148,00	5.827	68,50	2.697	50		**MPBSQ6003650**	**MPBST6003650**	**MPBSF6003650**	0,34	0.75
								1		MPBST60036254	MPBSF60036254	0,38	0.85
								1 3/16		MPBST60036301	MPBSF60036301	0,38	0.83
								1¼		MPBST60036317	MPBSF60036317	0,38	0.83
								1 7/16		MPBST60036365	MPBSF60036365	0,37	0.81
								1½	MPBSQ60036381	MPBST60036381	MPBSF60036381	0,37	0.81
							30			**MPBST6003830**	**MPBSF6003830**	0,39	0.86
							35			**MPBST6003835**	**MPBSF6003835**	0,38	0.84
							40		**MPBSQ6003840**	**MPBST6003840**	**MPBSF6003840**	0,37	0.83
							45			**MPBST6003845**	**MPBSF6003845**	0,36	0.80
38	153,8	6.055	156,00	6.142	72,55	2.856	50		**MPBSQ6003850**	**MPBST6003850**	**MPBSF6003850**	0,35	0.78
								1		MPBST60038254	MPBSF60038254	0,40	0.87
								1 3/16		MPBST60038301	MPBSF60038301	0,39	0.86
								1¼		MPBST60038317	MPBSF60038317	0,39	0.86
								1 7/16		MPBST60038365	MPBSF60038365	0,38	0.84
								1½	MPBSQ60038381	MPBST60038381	MPBSF60038381	0,38	0.84

*In case of round bore, diameter is indicated. In case of square bore, side of the square is indicated.
** Imperial round bore drive sprockets are supplied with setscrew. Metric round bore drive sprockets are supplied without setscrew.

Copyright Regina Catene Calibrate s.p.a. - 2020, All rights reserved

SUITABLE FOR CHAINS:

- **600 / 610 / LBP 610**
- **500 / HF 510**
- **300**
- **200 / HF 200**
- **611 WITHOUT TRACKING GUIDE (ALL WIDTHS)**
- **611 WITH TRACKING GUIDE (51 mm, 76 mm WIDTHS ONLY)**
- **RR 611 (ALL WIDTHS)**

MATERIALS		
SPROCKETS:	PA	POLYAMIDE
SCREWS:	SS	STAINLESS STEEL
NUTS:	B	BRASS

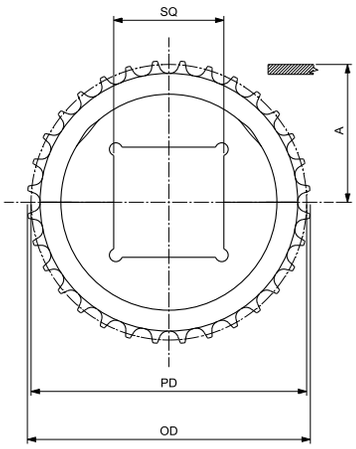

SQUARE BORE - DRIVE/IDLER

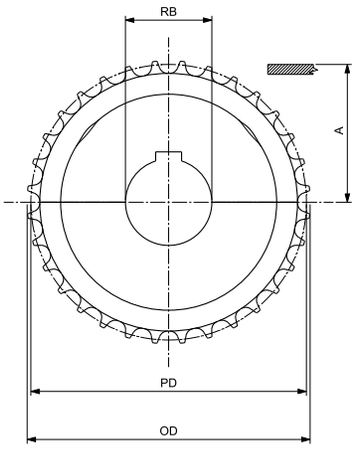

ROUND BORE - DRIVE

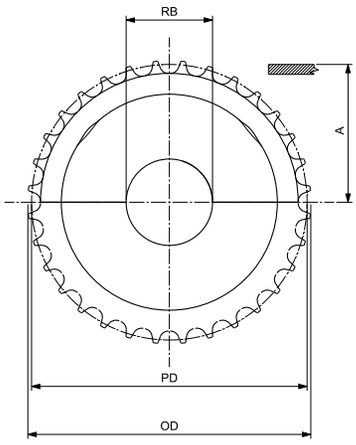

ROUND BORE - IDLER

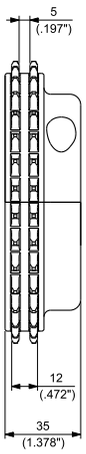

MACHINED SPLIT DRIVE AND IDLER SPROCKETS

N. TEETH	PITCH DIAMETER PD		OUTSIDE DIAMETER OD		WEAR STRIP POSITIONING A		BORE SIZE*		PART NUMBER SQUARE BORE SQ	PART NUMBER ROUND BORE RB		WEIGHT	
	mm	inch	mm	inch	mm	inch	mm	inch**	DRIVE/IDLER	DRIVE	IDLER	Kg	lbs
							25			**MPBAST6003225**	**MPBASF6003225**	0,41	0.90
							30			**MPBAST6003230**	**MPBASF6003230**	0,40	0.88
							35			**MPBAST6003235**	**MPBASF6003235**	0,39	0.85
							40		**MPBASQ6003240**	**MPBAST6003240**	**MPBASF6003240**	0,38	0.83
							45			**MPBAST6003245**	**MPBASF6003245**	0,36	0.80
32	129,57	5.101	131,00	5.157	60,44	2.379	50		**MPBASQ6003250**	**MPBAST6003250**	**MPBASF6003250**	0,35	0.77
								1		**MPBAST60032254**	**MPBASF60032254**	0,41	0.90
								1 3/16		**MPBAST60032301**	**MPBASF60032301**	0,40	0.88
								1 1/4		**MPBAST60032317**	**MPBASF60032317**	0,39	0.87
								1 7/16		**MPBAST60032365**	**MPBASF60032365**	0,38	0.85
								1 1/2		**MPBAST60032381**	**MPBASF60032381**	0,38	0.84

*In case of round bore, diameter is indicated. In case of square bore, side of the square is indicated.
** Imperial round bore drive sprockets are supplied with setscrew. Metric round bore drive sprockets are supplied without setscrew.

Copyright Regina Catene Calibrate s.p.a. - 2020, All rights reserved

SUITABLE FOR CHAINS:

- **500 / 600 / 610 / LBP 610 / HF 510 300 / 200 / HF 200**
- **1500 / 1600 / RR 1500 / HF 1600 / HFS 1600**
- **7300 / 7200**
- **USPM / USP / HF USPM / HFS USPM / LBP USPM / LBP XSPM**
- **782M / 783M / 793M**

MATERIALS		
SPROCKETS:	PGF	REINFORCED POLYAMIDE
SCREWS:	SS	STAINLESS STEEL
NUTS:	ZN	ZINC PLATED STEEL

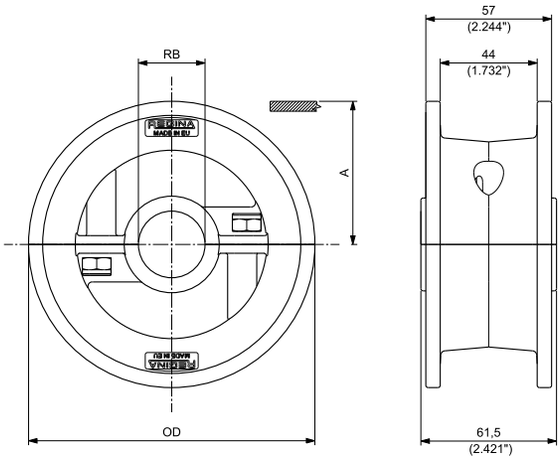

MOULDED SOLID IDLER WHEELS
SEE PAGE 123

MACHINED SPLIT IDLER WHEELS
SEE PAGE 125

MOULDED SPLIT IDLER WHEELS

N. TEETH	OUTSIDE DIAMETER OD mm	OUTSIDE DIAMETER OD inch	WEAR STRIP POSITIONING A mm	WEAR STRIP POSITIONING A inch	BORE SIZE* mm	BORE SIZE* inch	PART NUMBER ROUND BORE RB IDLER	WEIGHT Kg	WEIGHT lbs
21	129,80	5.110	64,90	2.555	25		CMTS048152125	0,33	0.72
					30		CMTS048152130	0,33	0.73
					35		CMTS048152135	0,31	0.68
					40		CMTS048152140	0,34	0.76
					45		CMTS048152145	0,31	0.69
						1	CMTS0481521254	0,33	0.72
						1¼	CMTS0481521317	0,33	0.71
23	142,30	5.602	71,15	2.801	25		CMTS048152325	0,36	0.80
					30		CMTS048152330	0,37	0.81
					35		CMTS048152335	0,35	0.76
					40		CMTS048152340	0,38	0.84
					45		CMTS048152345	0,35	0.77
						1	CMTS0481523254	0,36	0.80
						1¼	CMTS0481523317	0,36	0.79
25	154,70	6.091	77,35	3.045	25		CMTS048152525	0,40	0.89
					30		CMTS048152530	0,41	0.90
					35		CMTS048152535	0,39	0.85
					40		CMTS048152540	0,42	0.92
					45		CMTS048152545	0,39	0.86
						1	CMTS0481525254	0,40	0.89
						1¼	CMTS0481525317	0,40	0.88

*Diameter is indicated.

Copyright Regina Catene Calibrate s.p.a. - 2020, All rights reserved

REGINA CHAIN

PERFORMANCE IN MOTION

Matveyor®

1″ Pitch Light Duty Belts and Chains

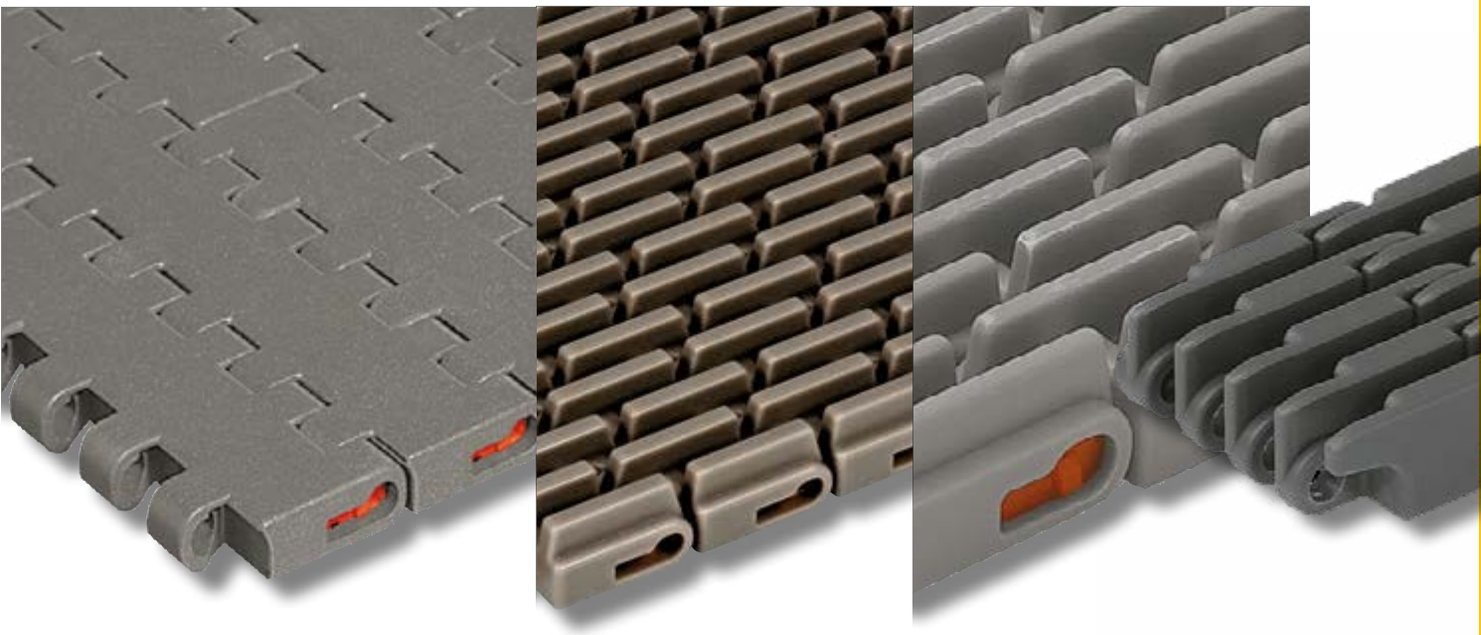

INDUSTRIES AND APPLICATIONS

Suitable for handling both loose & packaged products, such as plastic & glass bottles and aluminium & steel cans, in light duty applications

INDUSTRIES

Bottling and canning
Food filling
Container manufacturing
Pharmaceutical
Paper/cardboard
Consumer goods

APPLICATIONS

Depalletizer
Pressureless Inliners and Combiners
Single lane & mass conveyors
Accumulation tables
Infeed packaging machines
Palletizers

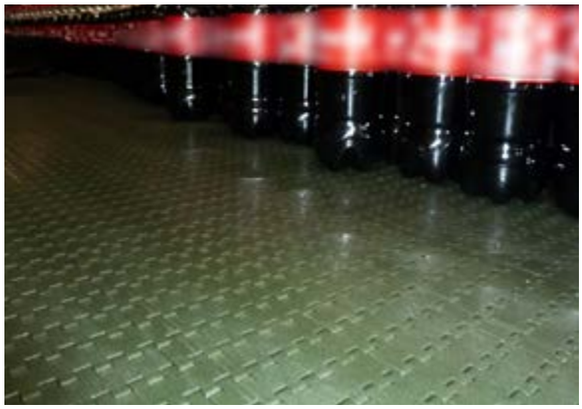

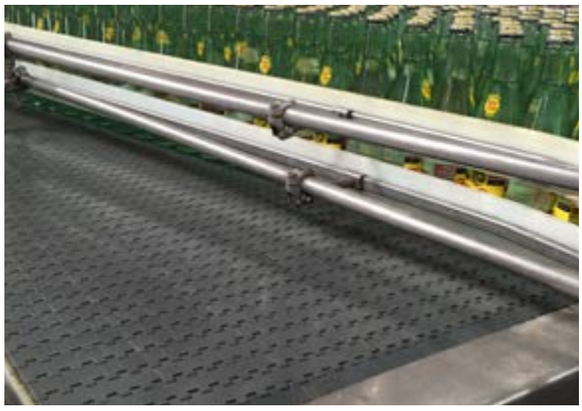

FEATURES

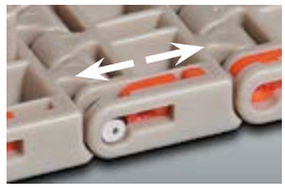

- Clip integrated with the module on the belt bottom results in an easy belt assembly and disassembly and in a uniform top surface.
- Round design edge and gap minimization between hinges allow a superior product handling in linear and side transfer of the products
- Optimized bottom sliding surface to guarantee wider contact with the wear strips and higher transversal stiffness:
  - Less specific pressure between belt and wear strips
  - Less wear
  - Superior flatness

- Rubberized belts available (HF 1600 series) featuring maximum and uniform rubberized area allowing outstanding gripping capabilities on the conveyed products.
- Solid top and flush grid belts can be used on conveyors side by side with Magnetic or TAB sideflexing chains 783 or 782 series allowing a smooth products transfer between straight running and sideflexing conveyors.
- Availability of a wide range of raised rib dedicated chains RR 1600 series suitable for the product dynamic dividing area of packaging machines.

Copyright Regina Catene Calibrate s.p.a. - 2020, All rights reserved

8,7 mm (0.343") THICKNESS
SOLID TOP

Extremely good flatness, manufacturing accuracy and low coefficient of friction make the side transfer of the product very easy.
Completely closed surface, no gap between the modules, even when engaging on the sprockets.
Particulary suitable for glass products, small sized products and unstable conta
(for example PET bottles with petaloid base).

DUPONT® KEVLAR® INSIDE

e-F.A.S.T. ECOLOGICAL FRICTION ABATING THERMO-PLASTIC

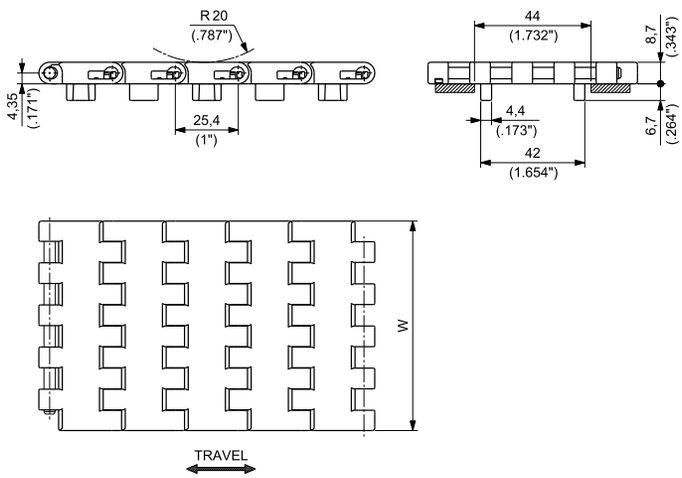

Materials see page 12
Sprockets see pages 212÷218
Applications see page 22

MATERIALS Plate	MATERIALS Pin	ITEM DESCRIPTION	PART NUMBER	WIDTH W mm	WIDTH W inch	PLATE THICKNESS mm	PLATE THICKNESS inch	WORKING LOAD (25°C/77°F) N	WORKING LOAD (25°C/77°F) lbs	WEIGHT kg/m	WEIGHT lbs/ft
ULTRA PERFORMANCE HOMOPOLYMER DELRIN ® UP		1600AG UP K 83,8	1600AGUPKRA/000	83,8	3.30	8,7	0.343	1850	416	0,75	0.50
SPECIAL DELRIN ® REINFORCED WITH KEVLAR ® DK2™	PBT	1600AG D2K K 83,8	1600AGD2KKRA/000	83,8	3.30	8,7	0.343	1850	416	0,75	0.50
NEW ECOLOGICAL FRICTION ABATING THERMOPLASTIC e-F.A.S.T.		1600AG EF K 83,8	1600AGEFKRA/000	83,8	3.30	8,7	0.343	1850	416	0,75	0.50

Standard packaging: Rolls of 3,048 m (10 feet)

Copyright Regina Catene Calibrate s.p.a. - 2020, All rights reserved

8,7 mm (0.343") THICKNESS
SOLID TOP

This belt offers a smooth surface to provide excellent support and minimize product tippage. Particulary suitable for glass products, small sized products and unstable containers (for example PET bottles with petaloid base).

- **Belt widths:** 85 mm (3.346") or wider in 85 mm (3.346") increments
- **Working Load (at 25°C/77°F):** 21600 N/m (1,480 lbs/ft) for UP, DK2™ and e-F.A.S.T. materials
- **Belt weight:** 7,66 kg/m² (1.57 lbs/ft²) for UP, DK2™ and e-F.A.S.T. materials

DUPONT® KEVLAR® INSIDE

e-F.A.S.T. ECOLOGICAL FRICTION ABATING THERMO-PLASTIC

VERSION WITHOUT TRACKING GUIDE

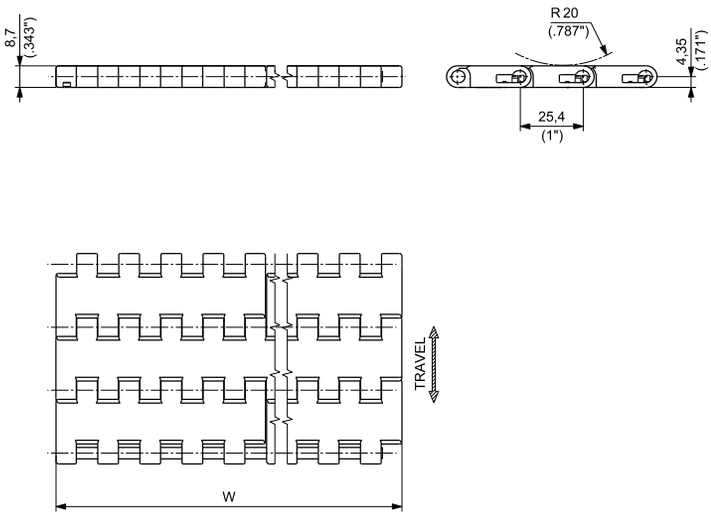

VERSION WITH TRACKING GUIDE

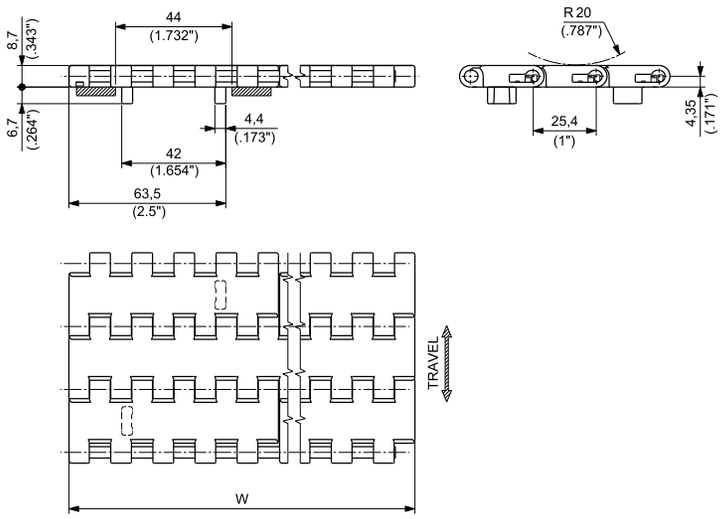

NOTE: The belt is also available with single tracking guide at both belt sides. Please contact REGINA customer service for further information.

Materials see page 12
Sprockets see pages 212÷218
Applications see page 22

WIDTH W		MATERIALS						
		Module						Pin
		UP ULTRA PERFORMANCE HOMOPOLYMER DELRIN ®		DK2™ SPECIAL DELRIN ® REINFORCED WITH KEVLAR ®		NEW e-F.A.S.T. ECOLOGICAL FRICTION ABATING THERMOPLASTIC		
		PART NUMBER		PART NUMBER		PART NUMBER		
mm	inch	WITHOUT TRACKING GUIDE	WITH TRACKING GUIDE	WITHOUT TRACKING GUIDE	WITH TRACKING GUIDE	WITHOUT TRACKING GUIDE	WITH TRACKING GUIDE	
85	3.35	**1600AUP0085**	**1600AGUP0085**	**1600AD2K0085**	**1600AGD2K0085**	**1600AEF0085**	**1600AGEF0085**	PBT
170	6.69	**1600BUP0170**	**1600BG1UP0170**	**1600BD2K0170**	**1600BG1D2K0170**	**1600AEF0170**	**1600AG1EF0170**	PBT for e-F.A.S.T. material POLYPROPYLENE for all other materials (PBT on request for all other materials)
255	10.04	**1600BUP0255**	**1600BG1UP0255**	**1600BD2K0255**	**1600BG1D2K0255**	**1600AEF0255**	**1600AG1EF0255**	
340	13.39	**1600BUP0340**	**1600BG1UP0340**	**1600BD2K0340**	**1600BG1D2K0340**	**1600AEF0340**	**1600AG1EF0340**	
425	16.73	**1600BUP0425**	**1600BG1UP0425**	**1600BD2K0425**	**1600BG1D2K0425**	**1600AEF0425**	**1600AG1EF0425**	
510	20.08	**1600BUP0510**	**1600BG1UP0510**	**1600BD2K0510**	**1600BG1D2K0510**	**1600AEF0510**	**1600AG1EF0510**	
595	23.43	**1600BUP0595**	**1600BG1UP0595**	**1600BD2K0595**	**1600BG1D2K0595**	**1600AEF0595**	**1600AG1EF0595**	
680	26.77	**1600BUP0680**	**1600BG1UP0680**	**1600BD2K0680**	**1600BG1D2K0680**	**1600AEF0680**	**1600AG1EF0680**	
765	30.12	**1600BUP0765**	**1600BG1UP0765**	**1600BD2K0765**	**1600BG1D2K0765**	**1600AEF0765**	**1600AG1EF0765**	
850	33.46	**1600BUP0850**	**1600BG1UP0850**	**1600BD2K0850**	**1600BG1D2K0850**	**1600AEF0850**	**1600AG1EF0850**	
935	36.81	**1600BUP0935**	**1600BG1UP0935**	**1600BD2K0935**	**1600BG1D2K0935**	**1600AEF0935**	**1600AG1EF0935**	
1020	40.16	**1600BUP1020**	**1600BG1UP1020**	**1600BD2K1020**	**1600BG1D2K1020**	**1600AEF1020**	**1600AG1EF1020**	

Belts wider than 1020 mm (40.16") are available in 85 mm (3.35") increments.
To identify the Part Numbers, please substitute the last four digits of the PN with the desired width.
Example: for a 1105 mm wide belt (=1020+85 mm) without guide, the PN for UP material is "1600BUP1105".

Standard packaging:
Belt widths ≤ 680 mm (26.77") are supplied in rolls of 3,048 m (10 ft) each.
Belt widths ≥ 765 mm (30.12") are supplied in the length requested by the customer.

Copyright Regina Catene Calibrate s.p.a. - 2020, All rights reserved

8,7 mm (0.343") THICKNESS
SOLID TOP

1600G ATM can be used in combination with 1600 modular belts.
Active transfer modules 1600G ATM allow the transfer of products between two 90° conveyor tracks without using dead plates.
The special wing shaped module profile supports the products dynamically during transfer on the take-away belts.
Available in left and right version.

DUPONT® KEVLAR® INSIDE

e-F.A.S.T. ECOLOGICAL FRICTION ABATING THERMO-PLASTIC

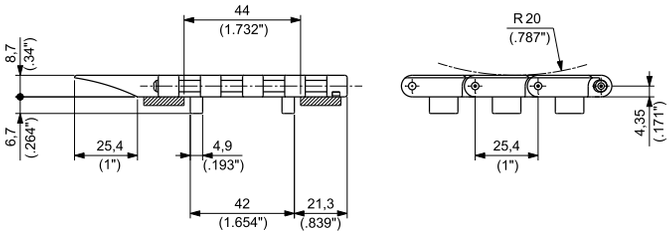

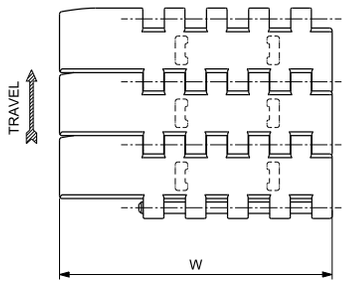

Left version

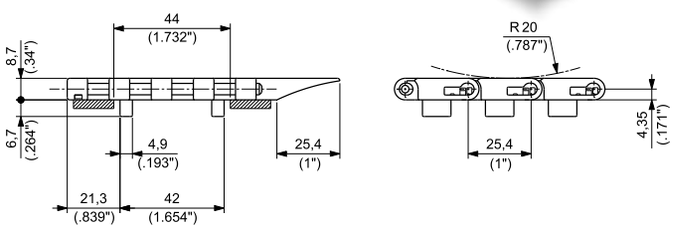

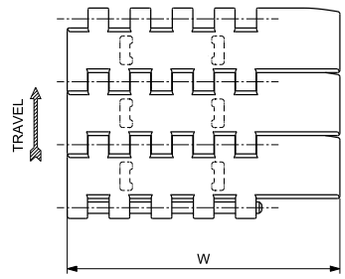

Right version

Materials see page 12
Sprockets see pages 212÷218
Applications see page 22

1600G ATM - Left Version

MATERIALS Plate	MATERIALS Pin	ITEM DESCRIPTION	PART NUMBER	WIDTH W mm	WIDTH W inch	PLATE THICKNESS mm	PLATE THICKNESS inch	WORKING LOAD (25°C/77°F) N	WORKING LOAD (25°C/77°F) lbs	WEIGHT kg/m	WEIGHT lbs/ft
ULTRA PERFORMANCE HOMOPOLYMER DELRIN® UP	POLYPROPYLENE	1600BGATM UP 0085 SX	1600BGATMUP085S	110	4.33	8,7	0.343	1840	414	0,85	0.57
SPECIAL DELRIN ® REINFORCED WITH KEVLAR ® DK2™ NEW	POLYPROPYLENE	1600BGATM D2K 0085 SX	1600BGATMD2K085S	110	4.33	8,7	0.343	1840	414	0,85	0.57
ECOLOGICAL FRICTION ABATING THERMOPLASTIC e-F.A.S.T.	PBT	1600AGATM EF 0085 SX	1600AGATMEF085S	110	4.33	8,7	0.343	1840	414	0,85	0.57

1600G ATM - Right Version

MATERIALS Plate	MATERIALS Pin	ITEM DESCRIPTION	PART NUMBER	WIDTH W mm	WIDTH W inch	PLATE THICKNESS mm	PLATE THICKNESS inch	WORKING LOAD (25°C/77°F) N	WORKING LOAD (25°C/77°F) lbs	WEIGHT kg/m	WEIGHT lbs/ft
ULTRA PERFORMANCE HOMOPOLYMER DELRIN ® UP	POLYPROPYLENE	1600BGATM UP 0085 DX	1600BGATMUP085D	110	4.33	8,7	0.343	1840	414	0,85	0.57
		1600BGATM UP 0170 DX	1600BGATMUP170D	195	7.68	8,7	0.343	3670	825	1,51	1.01
SPECIAL DELRIN ® REINFORCED WITH KEVLAR ® DK2™	POLYPROPYLENE	1600BGATM D2K 0085 DX	1600BGATMD2K085D	110	4.33	8,7	0.343	1840	414	0,85	0.57
		1600BGATM D2K 0170 DX	1600BGATMD2K170D	195	7.68	8,7	0.343	3670	825	1,51	1.01
ECOLOGICAL FRICTION ABATING THERMOPLASTIC e-F.A.S.T. NEW	PBT	1600AGATM EF 0085 DX	1600AGATMEF085D	110	4.33	8,7	0.343	1840	414	0,85	0.57
		1600AGATM EF 0170 DX	1600AGATMEF170D	195	7.68	8,7	0.343	3670	825	1,51	1.01

Standard packaging: Rolls of 3,048 m (10 feet)

Copyright Regina Catene Calibrate s.p.a. - 2020, All rights reserved

8,7 mm (0.343") THICKNESS FLUSH GRID

NEW

Extremely good flatness, manufacturing accuracy and low coefficient of friction make the side transfer of the product very easy.
Excellent combination of open and support areas to allow drainage of liquids and good support of the conveyed product.
Particulary suitable for aluminium cans conveying.

DUPONT® KEVLAR® INSIDE

e-F.A.S.T. ECOLOGICAL FRICTION ABATING THERMO-PLASTIC

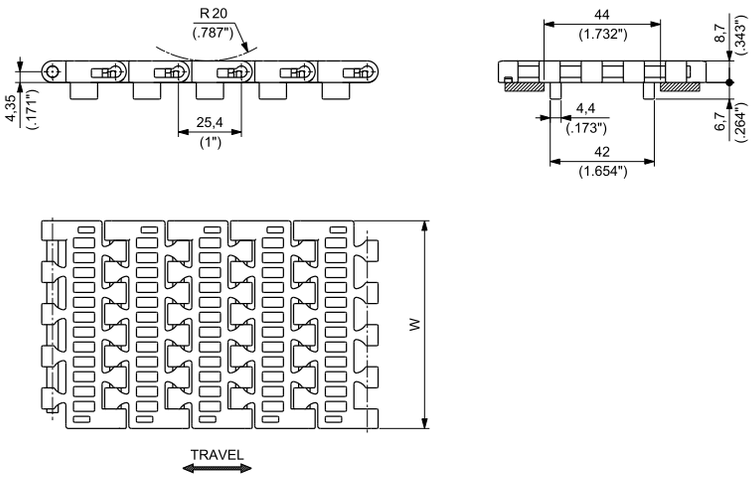

Materials see page 12
Sprockets see pages 212÷218
Applications see page 22

MATERIALS Plate	MATERIALS Pin	ITEM DESCRIPTION	PART NUMBER	WIDTH W mm	WIDTH W inch	PLATE THICKNESS mm	PLATE THICKNESS inch	WORKING LOAD (25°C/77°F) N	WORKING LOAD (25°C/77°F) lbs	WEIGHT kg/m	WEIGHT lbs/ft
ULTRA PERFORMANCE HOMOPOLYMER DELRIN ® UP		1500AG UP K 83,8	1500AGUPKRA/000	83,8	3.30	8,7	0.343	1850	416	0,66	0.44
SPECIAL DELRIN ® REINFORCED WITH KEVLAR ® DK2™	PBT	1500AG D2K K 83,8	1500AGD2KKRA/000	83,8	3.30	8,7	0.343	1850	416	0,66	0.44
NEW ECOLOGICAL FRICTION ABATING THERMOPLASTIC e-F.A.S.T.		1500AG EF K 83,8	1500AGEFKRA/000	83,8	3.30	8,7	0.343	1850	416	0,66	0.44

Standard packaging: Rolls of 3,048 m (10 feet)

Copyright Regina Catene Calibrate s.p.a. - 2020, All rights reserved

8,7 mm (0.343") THICKNESS FLUSH GRID

This belt has an excellent combination of open and support areas to allow drainage of liquids and good support of the conveyed product. This belt is particularly suitable for conveying of aluminium cans.

- **Belt widths:** 85 mm (3.346") or wider in 85 mm (3.346") increments
- **Working Load (at 25°C/77°F):** 21600 N/m (1,480 lbs/ft) for UP and DK2™ materials
  13200 N/m (904 lbs/ft) for PP material
- **Belt weight:** 6,58 kg/m² (1.58 lbs/ft²) for UP and DK2™ materials
  4,43 kg/m² (1.35 lbs/ft²) for PP material

DK2™ DUPONT® KEVLAR® INSIDE

VERSION WITHOUT TRACKING GUIDE

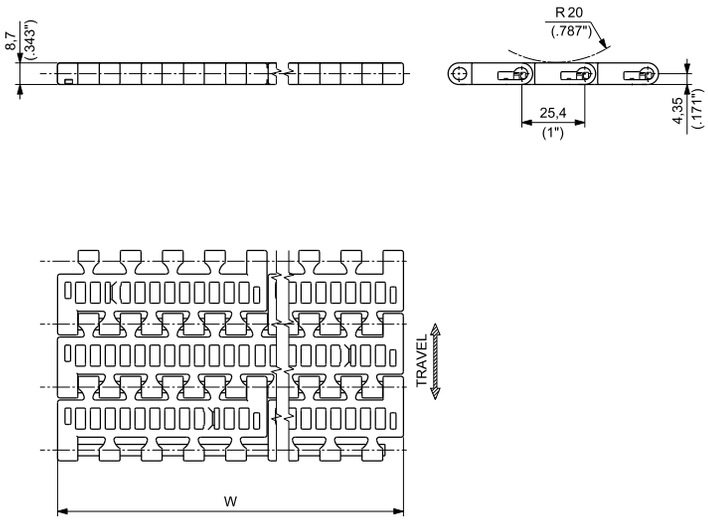

VERSION WITH TRACKING GUIDE

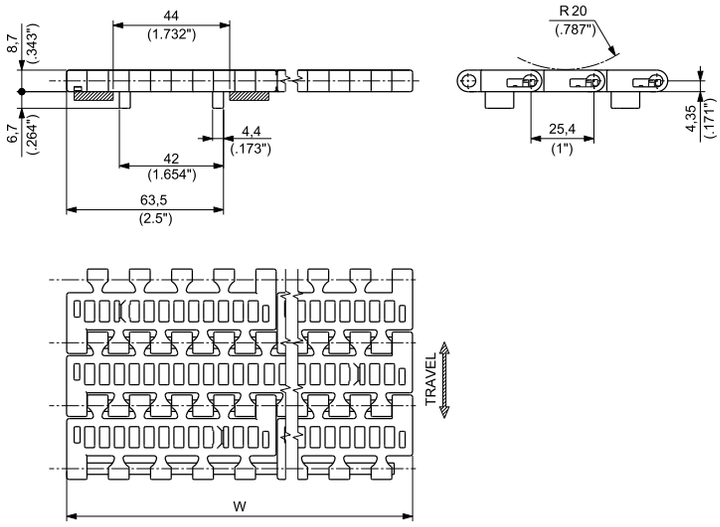

NOTE: The belt is also available with single tracking guide at both belt sides. Please contact REGINA customer service for further information.

Materials see page 12
Sprockets see pages 212÷218
Applications see page 22

WIDTH W		MATERIALS						
		Module						Pin
		UP ULTRA PERFORMANCE HOMOPOLYMER DELRIN®		DK2™ SPECIAL DELRIN ® REINFORCED WITH KEVLAR ®		PP SPECIAL POLYPROPYLENE(1)		
		PART NUMBER		PART NUMBER		PART NUMBER		
mm	inch	WITHOUT TRACKING GUIDE	WITH TRACKING GUIDE	WITHOUT TRACKING GUIDE	WITH TRACKING GUIDE	WITHOUT TRACKING GUIDE	WITH TRACKING GUIDE	
85	3.35	**1500AUP0085**	**1500AGUP0085**	**1500AD2K0085**	**1500AGD2K0085**	**1500APP0085**	**1500AGPP0085**	PBT
170	6.69	**1500BUP0170**	**1500BG1UP0170**	**1500BD2K0170**	**1500BG1D2K0170**	**1500BPP0170**	**1500BG1PP0170**	POLYPROPYLENE (PBT on request)
255	10.04	**1500BUP0255**	**1500BG1UP0255**	**1500BD2K0255**	**1500BG1D2K0255**	**1500BPP0255**	**1500BG1PP0255**	
340	13.39	**1500BUP0340**	**1500BG1UP0340**	**1500BD2K0340**	**1500BG1D2K0340**	**1500BPP0340**	**1500BG1PP0340**	
425	16.73	**1500BUP0425**	**1500BG1UP0425**	**1500BD2K0425**	**1500BG1D2K0425**	**1500BPP0425**	**1500BG1PP0425**	
510	20.08	**1500BUP0510**	**1500BG1UP0510**	**1500BD2K0510**	**1500BG1D2K0510**	**1500BPP0510**	**1500BG1PP0510**	
595	23.43	**1500BUP0595**	**1500BG1UP0595**	**1500BD2K0595**	**1500BG1D2K0595**	**1500BPP0595**	**1500BG1PP0595**	
680	26.77	**1500BUP0680**	**1500BG1UP0680**	**1500BD2K0680**	**1500BG1D2K0680**	**1500BPP0680**	**1500BG1PP0680**	
765	30.12	**1500BUP0765**	**1500BG1UP0765**	**1500BD2K0765**	**1500BG1D2K0765**	**1500BPP0765**	**1500BG1PP0765**	
850	33.46	**1500BUP0850**	**1500BG1UP0850**	**1500BD2K0850**	**1500BG1D2K0850**	**1500BPP0850**	**1500BG1PP0850**	
935	36.81	**1500BUP0935**	**1500BG1UP0935**	**1500BD2K0935**	**1500BG1D2K0935**	**1500BPP0935**	**1500BG1PP0935**	
1020	40.16	**1500BUP1020**	**1500BG1UP1020**	**1500BD2K1020**	**1500BG1D2K1020**	**1500BPP1020**	**1500BG1PP1020**	

(1) ACTUAL WIDTH CAN BE UP TO 1% GREATER THAN NOMINAL WIDTH

Belts wider than 1020 mm (40.16") are available in 85 mm (3.35") increments.
To identify the Part Numbers, please substitute the last four digits of the PN with the desired width.
Example: for a 1105 mm wide belt (=1020+85 mm) without guide, the PN for UP material is "1500BUP1105".

Standard packaging:
Belt widths ≤ 680 mm (26.77") are supplied in rolls of 3,048 m (10 ft) each.
Belt widths ≥ 765 mm (30.12") are supplied in the length requested by the customer.

Copyright Regina Catene Calibrate s.p.a. - 2020, All rights reserved

8,7 mm (0.343") THICKNESS
FLUSH GRID

This belt has an excellent combination of open and support areas to allow drainage of liquids and good support of the conveyed product. This belt is particularly suitable for conveying of aluminium cans.

- **Belt widths:** 85 mm (3.346") or wider in 85 mm (3.346") increments
- **Working Load (at 25°C/77°F):** 21600 N/m (1,480 lbs/ft) for e-F.A.S.T. materials
- **Belt weight:** 6,58 kg/m² (1.58 lbs/ft²) for e-F.A.S.T. materials

e-F.A.S.T. ECOLOGICAL FRICTION ABATING THERMO-PLASTIC

VERSION WITHOUT TRACKING GUIDE

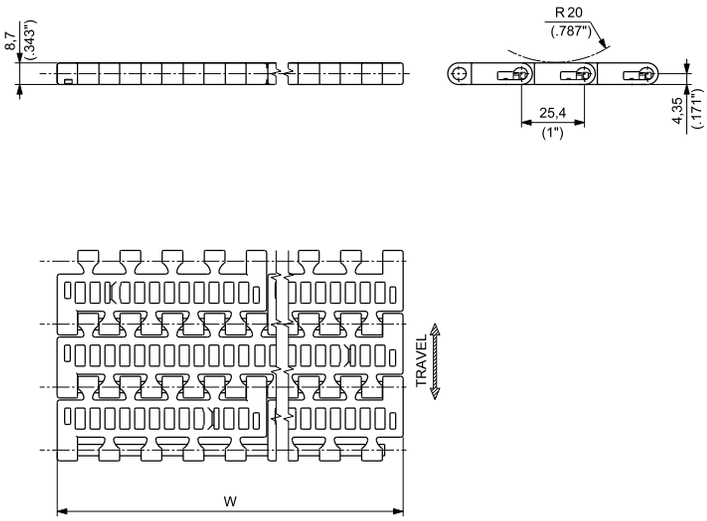

VERSION WITH TRACKING GUIDE

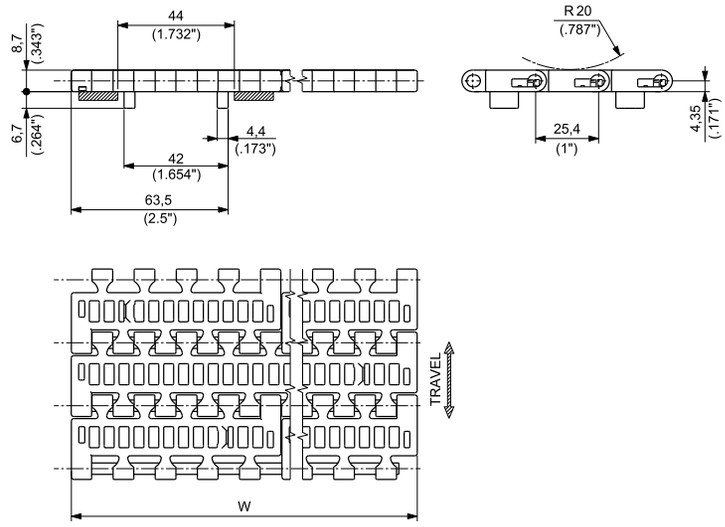

NOTE: The belt is also available with single tracking guide at both belt sides. Please contact REGINA customer service for further information.

Materials see page 12
Sprockets see pages 212÷218
Applications see page 22

WIDTH W		MATERIALS		
		NEW Module		Pin
		e-F.A.S.T. ECOLOGICAL FRICTION ABATING THERMOPLASTIC		
		PART NUMBER		
mm	inch	WITHOUT TRACKING GUIDE	WITH TRACKING GUIDE	
85	3.35	**1500AEF0085**	**1500AGEF0085**	PBT
170	6.69	**1500AEF0170**	**1500AG1EF0170**	
255	10.04	**1500AEF0255**	**1500AG1EF0255**	
340	13.39	**1500AEF0340**	**1500AG1EF0340**	
425	16.73	**1500AEF0425**	**1500AG1EF0425**	
510	20.08	**1500AEF0510**	**1500AG1EF0510**	
595	23.43	**1500AEF0595**	**1500AG1EF0595**	
680	26.77	**1500AEF0680**	**1500AG1EF0680**	
765	30.12	**1500AEF0765**	**1500AG1EF0765**	
850	33.46	**1500AEF0850**	**1500AG1EF0850**	
935	36.81	**1500AEF0935**	**1500AG1EF0935**	
1020	40.16	**1500AEF1020**	**1500AG1EF1020**	

Belts wider than 1020 mm (40.16") are available in 85 mm (3.35") increments.
To identify the Part Numbers, please substitute the last four digits of the PN with the desired width.
Example: for a 1105 mm wide belt (=1020+85 mm) without guide, the PN for EF material is "1500AEF1105".

Standard packaging:
Belt widths ≤ 680 mm (26.77") are supplied in rolls of 3,048 m (10 ft) each.
Belt widths ≥ 765 mm (30.12") are supplied in the length requested by the customer.

Copyright Regina Catene Calibrate s.p.a. - 2020, All rights reserved

ACTIVE TRANSFER MODULES
8,7 mm (0.343") THICKNESS
FLUSH GRID

1500G ATM can be used in combination with 1500 Modular belts series.
Active transfer modules 1500G ATM allow the transfer of products between two 90° conveyor tracks without using dead plates.
The special wing shaped module profile supports the products dynamically during transfer on the take-away belt.
This system is particularly suitable for aluminium cans.

DUPONT® KEVLAR® INSIDE

e-F.A.S.T. ECOLOGICAL FRICTION ABATING THERMO-PLASTIC

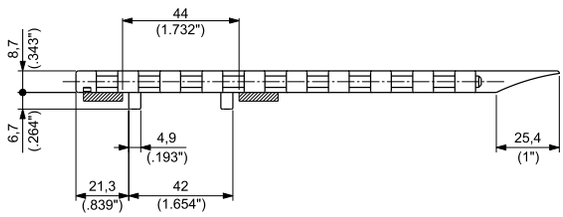

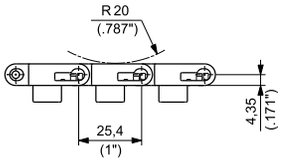

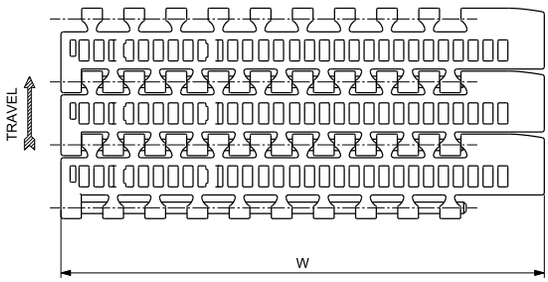

Right version

Materials see page 12

Sprockets see pages 212÷218

Applications see page 22

1500G ATM - Right Version

MATERIALS Plate	MATERIALS Pin	ITEM DESCRIPTION	PART NUMBER	WIDTH W mm	WIDTH W inch	PLATE THICKNESS mm	PLATE THICKNESS inch	WORKING LOAD (25°C/77°F) N	WORKING LOAD (25°C/77°F) lbs	WEIGHT kg/m	WEIGHT lbs/ft
ULTRA PERFORMANCE HOMOPOLYMER DELRIN® UP	POLYPROPYLENE	1500BGATM UP 0170 DX	1500BGATMUP170D	195	7.68	8,7	0.343	3670	825	0,85	0.57
SPECIAL DELRIN ® REINFORCED WITH KEVLAR ® DK2™	POLYPROPYLENE	1500BGATM D2K 0170 DX	1500BGATMD2K170D	195	7.68	8,7	0.343	3670	825	0,85	0.57
NEW ECOLOGICAL FRICTION ABATING THERMOPLASTIC e-F.A.S.T.	PBT	1500AGATM EF 0170 DX	1500AGATMEF170D	195	7.68	8,7	0.343	3670	825	0,85	0.57

Standard packaging: Rolls of 3,048 m (10 feet)

Copyright Regina Catene Calibrate s.p.a. - 2020, All rights reserved

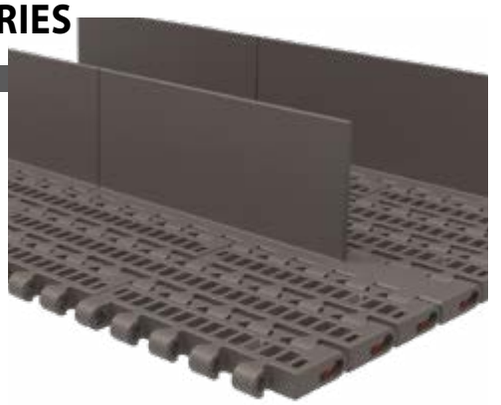

8,7 mm (0.343") THICKNESS
FLUSH GRID
FOR INCLINE/DECLINE APPLICATIONS

NEW

The 1500 series are also available in a version with flights.
Flights can now be integrated into 1500 series conveyors, to convey products in incline or decline applications.
Flight modules are single-piece elements made by injection-molding that, once assembled, become an integral part of the belt.

Flights are available in 1" (25,4 mm), 2" (50,8 mm) or 3" (76,2 mm) standard heights (F dimension).
Flights can be as wide as the module (see exhibit 1), or have a 45 mm (1.772") side indent (see exhibit 2).

EXHIBIT 1

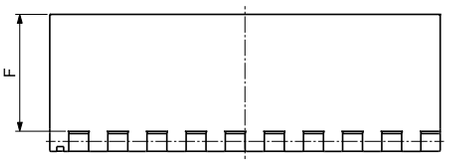

EXHIBIT 2

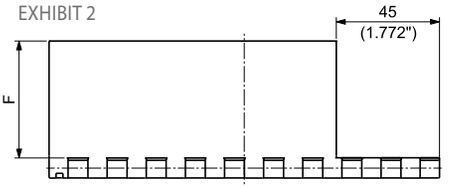

The position of flights into a 1500 modular belt can be customized to fit different applications or conveyor designs, by specifying the following parameters:

1) Flights pitch (K): distance between 2 rows of flights (see exhibit 3).

EXHIBIT 3

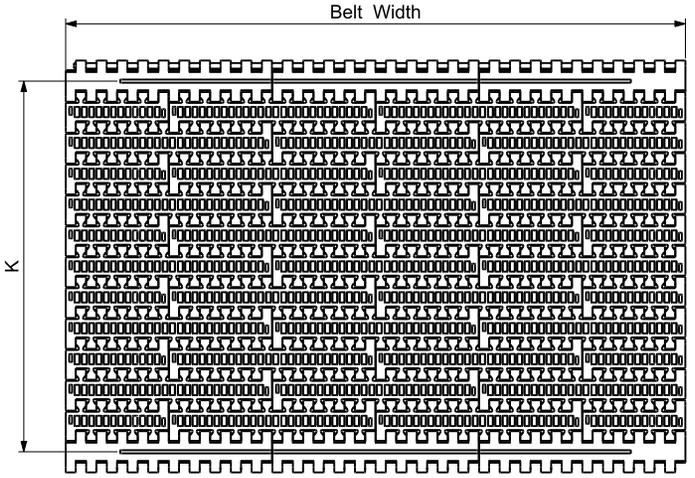

Copyright Regina Catene Calibrate s.p.a. - 2020, All rights reserved

2) Indent (see configuration examples below): the flight indent (N) is the distance between the edge of the belt and the edge of the flight.

It is required to support the belt on its return ways and to hold it down during back flexing.
Standard indent (N) values:
- No side indent
- 45 mm (1.772")

3) N. of Notches and dimension (see configuration examples below): the notch (G) is a gap in each row of flights, longitudinally aligned, to allow supporting the belts on their return ways or in backflexing applications.
The distance (D) is the notch distance from the belt edge.

4) N. of Notches available:
- N. 1 notch in the centre
- N. 2 symmetrical notches
- N. 3 symmetrical notches

The belt can be also supplied without notches.
Standard gap (G) values:
- 45 mm (1.772")

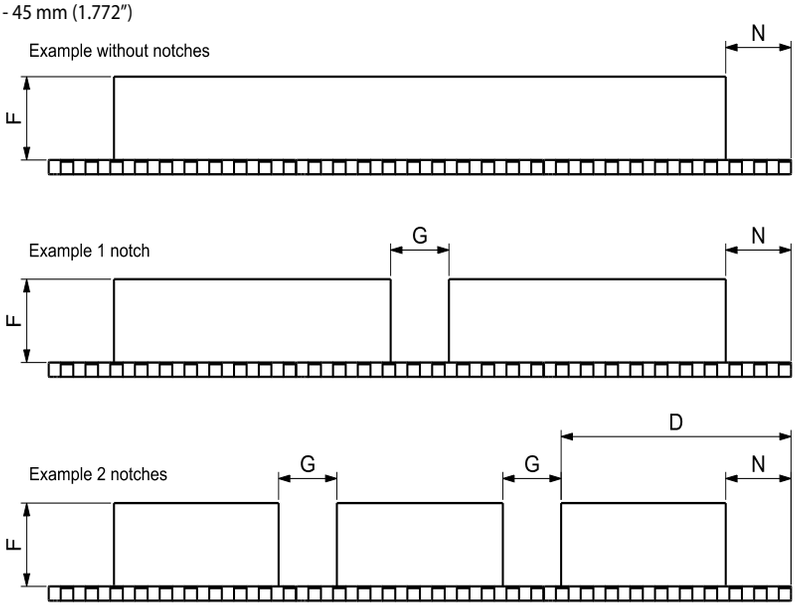

CATALOGUE REFERENCE

Use the checklist below to select the correct belt version according to the application needs. Check boxes and fill-in the required values, then contact REGINA Sales Department.

SERIES: 1500 (Flush grid surface)
MATERIAL: Polypropylene PP (grey)

Belt Width (W)	☐ (multiples of 85 mm increments)
Flight height (F)	☐ 1" (25,4 mm)
	☐ 2" (50,8 mm)
	☐ 3" (76,2 mm)
	☐ (special value less than 3" on request)
Flights pitch (K)	☐ (flights row every.. th belt row)
Side indent (N)	☐ No side indent
	☐ 45 mm (1.771") indent
	☐ (special value on request)
N. of notches	☐ No notch
	☐ 1 notch in the centre
	☐ 2 symmetrical notches
	☐ 3 symmetrical notches
Notch width (G)	☐ 45 mm (1.771")
	☐ (special value on request)
Notch distance (D)	☐

Copyright Regina Catene Calibrate s.p.a. - 2020, All rights reserved

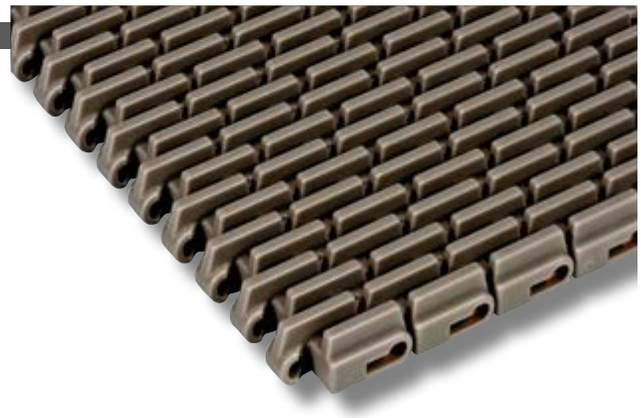

8,7 mm (0.343") THICKNESS
RAISED RIB

This belt allows smooth head transfer of the products, thanks to the optimized ratio rib thickness / spacing and the special click-combs.
Particularly suitable for products infeed of packaging machines.

- **Belt widths:** 170 mm (6.69") or wider in 85 mm (3.34") increments
- **Working Load (at 25°C/77°F):** 21600 N/m (1,480 lbs/ft)
- **Belt weight:** 9,62 kg/m² (1.97 lbs/ft²)

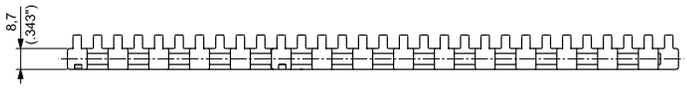

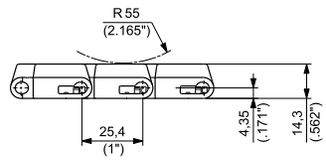

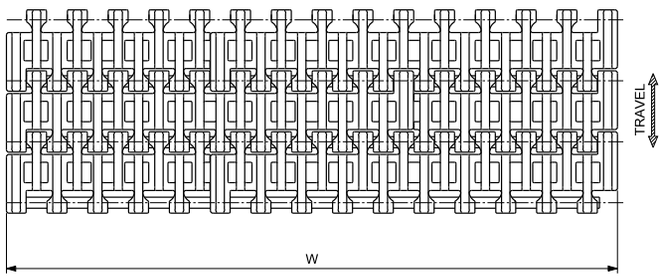

Materials see page 12
Combs see page 205
Sprockets see pages 212÷218
Applications see page 22

WIDTH W		MATERIALS	
		Module	Pin
		UP ULTRA PERFORMANCE HOMOPOLYMER DELRIN ®	
mm	inch	PART NUMBER	
170	6.69	**RR1500BUP0170**	POLYPROPYLENE
255	10.04	**RR1500BUP0255**	
340	13.39	**RR1500BUP0340**	
425	16.73	**RR1500BUP0425**	
510	20.08	**RR1500BUP0510**	
595	23.43	**RR1500BUP0595**	
680	26.77	**RR1500BUP0680**	
765	30.12	**RR1500BUP0765**	
850	33.46	**RR1500BUP0850**	
935	36.81	**RR1500BUP0935**	
1020	40.16	**RR1500BUP1020**	

Belts wider than 1020 mm (40.16") are available in 85 mm (3.35") increments.
To identify the Part Numbers, please substitute the last four digits of the PN with the desired width.
Example: for a 1105 mm wide belt (=1020+85 mm), the PN for UP material is "RR1500BUP1105".

Standard packaging:
Belt widths ≤ 680 mm (26.77") are supplied in rolls of 3,048 m (10 ft) each.
Belt widths ≥ 765 mm (30.12") are supplied in the length requested by the customer.

Copyright Regina Catene Calibrate s.p.a. - 2020, All rights reserved

TRANSFER COMBS

The comb is click-fitted on the omega style profile without using any fastening screws.

MATERIALS		
COMBS:	DG	ACETAL RESIN
PROFILE:	SS	STAINLESS STEEL

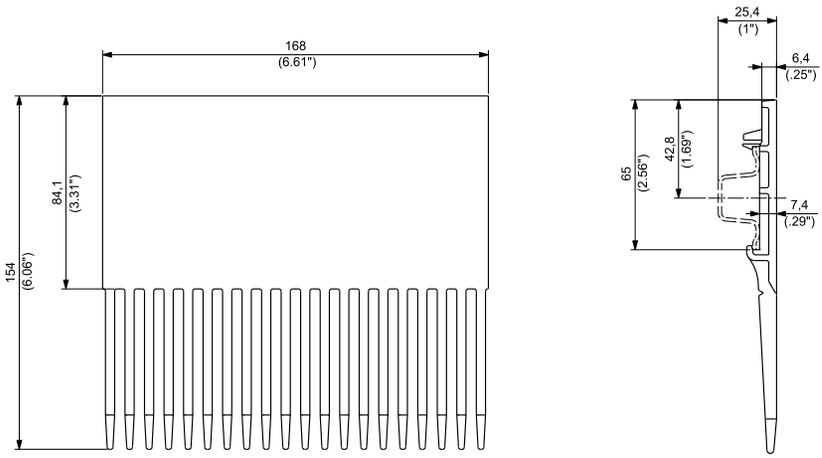

PART NUMBER **TC1500-01**

OMEGA STYLE PROFILE

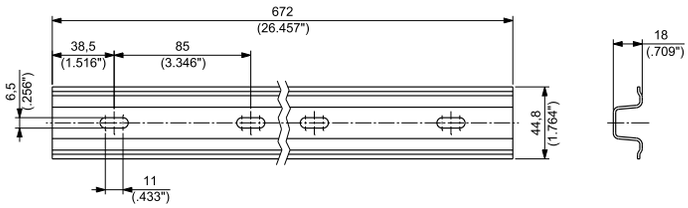

PART NUMBER **PRT-RR1500-0672**

Copyright Regina Catene Calibrate s.p.a. - 2020, All rights reserved

8,7 mm (0.343") THICKNESS
RUBBERIZED SURFACE - FULL COVER

This belts is specifically designed for handling shrink wrapped packs, boxes, plastic trays and other type of containers in incline, decline or timing applications.
The rubberized area is maximized to provide outstanding gripping capabilities on the conveyed products.

- **Belt widths:** 85 mm (3.346") or wider in 85 mm (3.346") increments
- **Working Load (at 25°C/77°F):** 21600 N/m (1,480 lbs/ft) for ULF material
  13200 N/m (904 lbs/ft) for PP material
- **Belt weight:** 9,05 kg/m² (1.85 lbs/ft²) for ULF material
  6,84 kg/m² (1.40 lbs/ft²) for PP material

VERSION WITHOUT TRACKING GUIDE

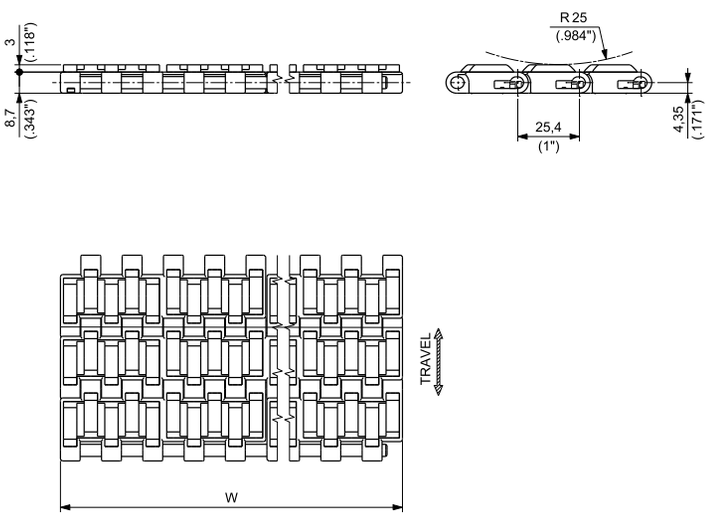

VERSION WITH TRACKING GUIDE

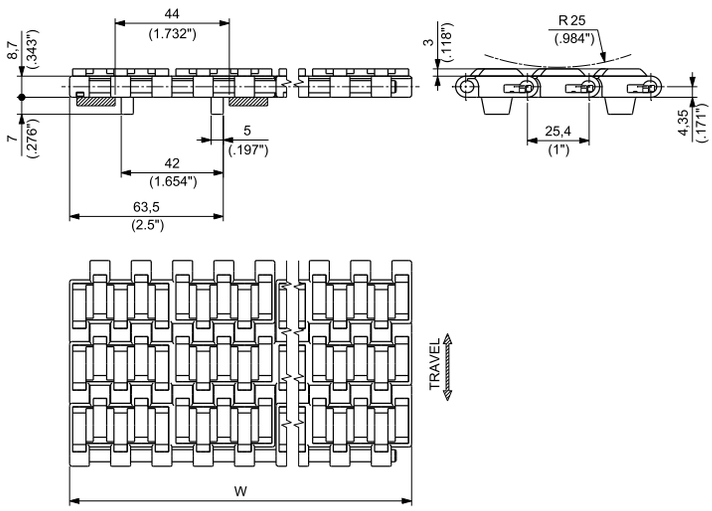

Materials see page 12
Sprockets see pages 212÷218
Applications see page 22

WIDTH W		MATERIALS					
		Module				Rubber	Pin
		ULF ULTRA LOW FRICTION POLYESTER RESIN		PP SPECIAL POLYPROPYLENE[1]			
		PART NUMBER		PART NUMBER			
mm	inch	WITHOUT TRACKING GUIDE	WITH TRACKING GUIDE	WITHOUT TRACKING GUIDE	WITH TRACKING GUIDE		
85	3.35	**HF1600ULF0085**	**HF1600GULF0085**	**HF1600APP0085**	**HF1600AGPP0085**	THERMOPLASTIC TPE Hardness: 55 ShA for ULF material 50 ShA for PP material	POM for ULF material PBT for PP material
170	6.69	**HF1600ULF0170**	**HF1600G1ULF0170**	**HF1600APP0170**	**HF1600AG1PP0170**		
255	10.04	**HF1600ULF0255**	**HF1600G1ULF0255**	**HF1600APP0255**	**HF1600AG1PP0255**		
340	13.39	**HF1600ULF0340**	**HF1600G1ULF0340**	**HF1600APP0340**	**HF1600AG1PP0340**		
425	16.73	**HF1600ULF0425**	**HF1600G1ULF0425**	**HF1600APP0425**	**HF1600AG1PP0425**		
510	20.08	**HF1600ULF0510**	**HF1600G1ULF0510**	**HF1600APP0510**	**HF1600AG1PP0510**		
595	23.43	**HF1600ULF0595**	**HF1600G1ULF0595**	**HF1600APP0595**	**HF1600AG1PP0595**		
680	26.77	**HF1600ULF0680**	**HF1600G1ULF0680**	**HF1600APP0680**	**HF1600AG1PP0680**		
756	30.12	**HF1600ULF0765**	**HF1600G1ULF0765**	**HF1600APP0765**	**HF1600AG1PP0765**		
850	33.46	**HF1600ULF0850**	**HF1600G1ULF0850**	**HF1600APP0850**	**HF1600AG1PP0850**		
935	36.81	**HF1600ULF0935**	**HF1600G1ULF0935**	**HF1600APP0935**	**HF1600AG1PP0935**		
1020	40.16	**HF1600ULF1020**	**HF1600G1ULF1020**	**HF1600APP1020**	**HF1600AG1PP1020**		

[1] ACTUAL WIDTH CAN BE UP TO 1% GREATER THAN NOMINAL WIDTH

Belts wider than 1020 mm (40.16") are available in 85 mm (3.35") increments.
To identify the Part Numbers, please substitute the last four digits of the PN with the desired width.
Example: for a 1105 mm wide belt (=1020+85 mm) without guide, the PN for ULF material is "HF1600ULF1105".

Standard packaging:
Belt widths ≤ 425 mm (16.73") are supplied in rolls of 1,524 m (5 ft) each.
Belt widths ≥ 510 mm (20.08") are supplied in the length requested by the customer.

Copyright Regina Catene Calibrate s.p.a. - 2020, All rights reserved

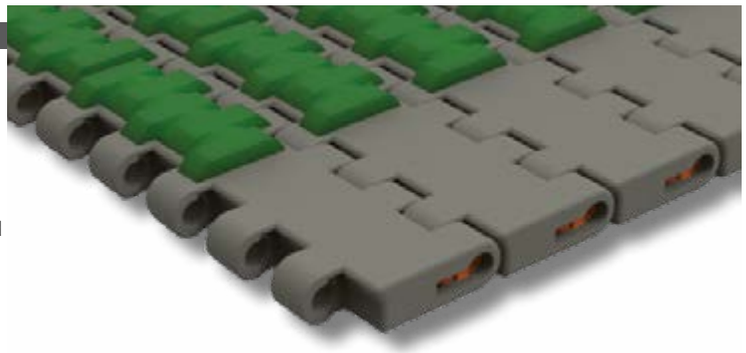

8,7 mm (0.343") THICKNESS
RUBBERIZED SURFACE - SIDE INDENT

The belt is specifically designed for handling shrink wrapped packs, boxes, plastic trayes and other types of containers in incline, decline or timing applications.

- **Belt widths:** 255 mm (10.04") or wider in 85 mm (3.346") increments
- **Working Load (at 25°C/77°F):** 21600 N/m (1,480 lbs/ft) for ULF material
  13200 N/m (904 lbs/ft) for PP material
- **Belt weight:** 8,91 kg/m² (1.82 lbs/ft²) for ULF material
  6,71 kg/m² (1.37 lbs/ft²) for PP material

VERSION WITHOUT TRACKING GUIDE

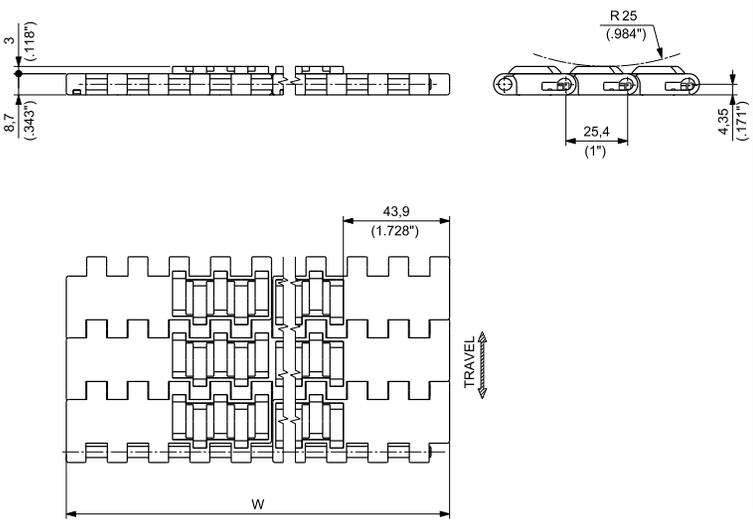

VERSION WITH TRACKING GUIDE

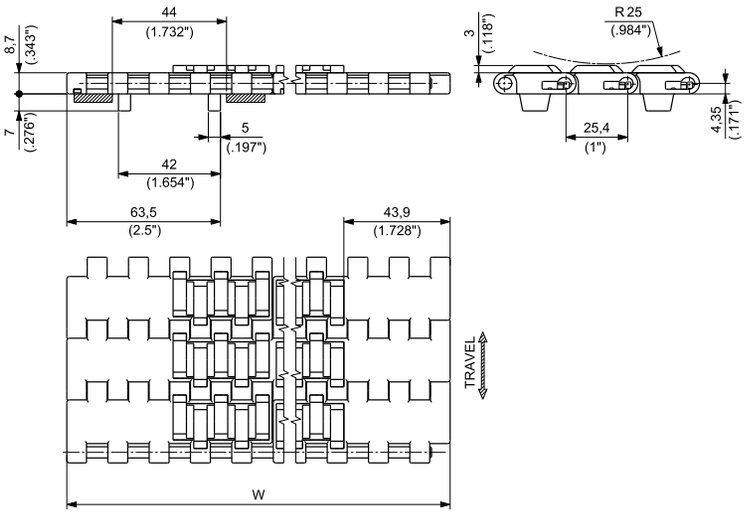

Materials see page 12
Sprockets see pages 212÷218
Applications see page 22

WIDTH W		MATERIALS					
		Module				Rubber	Pin
		ULF ULTRA LOW FRICTION POLYESTER RESIN		PP SPECIAL POLYPROPYLENE [1]			
		PART NUMBER		PART NUMBER			
mm	inch	WITHOUT TRACKING GUIDE	WITH TRACKING GUIDE	WITHOUT TRACKING GUIDE	WITH TRACKING GUIDE		
255	10.04	**HFS1600ULF0255**	**HFS1600G1ULF0255**	**HFS1600APP0255**	**HFS1600AG1PP0255**	THERMOPLASTIC TPE Hardness: 55 ShA for ULF material 50 ShA for PP material	POM for ULF material PBT for PP material
340	13.39	**HFS1600ULF0340**	**HFS1600G1ULF0340**	**HFS1600APP0340**	**HFS1600AG1PP0340**		
425	16.73	**HFS1600ULF0425**	**HFS1600G1ULF0425**	**HFS1600APP0425**	**HFS1600AG1PP0425**		
510	20.08	**HFS1600ULF0510**	**HFS1600G1ULF0510**	**HFS1600APP0510**	**HFS1600AG1PP0510**		
595	23.43	**HFS1600ULF0595**	**HFS1600G1ULF0595**	**HFS1600APP0595**	**HFS1600AG1PP0595**		
680	26.77	**HFS1600ULF0680**	**HFS1600G1ULF0680**	**HFS1600APP0680**	**HFS1600AG1PP0680**		
765	30.12	**HFS1600ULF0765**	**HFS1600G1ULF0765**	**HFS1600APP0765**	**HFS1600AG1PP0765**		
850	33.46	**HFS1600ULF0850**	**HFS1600G1ULF0850**	**HFS1600APP0850**	**HFS1600AG1PP0850**		
935	36.81	**HFS1600ULF0935**	**HFS1600G1ULF0935**	**HFS1600APP0935**	**HFS1600AG1PP0935**		
1020	40.16	**HFS1600ULF1020**	**HFS1600G1ULF1020**	**HFS1600APP1020**	**HFS1600AG1PP1020**		

[1] ACTUAL WIDTH CAN BE UP TO 1% GREATER THAN NOMINAL WIDTH

Belts wider than 1020 mm (40.16") are available in 85 mm (3.35") increments.
To identify the Part Numbers, please substitute the last four digits of the PN with the desired width.
Example: for a 1105 mm wide belt (=1020+85 mm) without guide, the PN for ULF material is "HFS1600ULF1105".

Standard packaging:
Belt widths ≤ 425 mm (16.73") are supplied in rolls of 1,524 m (5 ft) each.
Belt widths ≥ 510 mm (20.08") are supplied in the length requested by the customer.

Copyright Regina Catene Calibrate s.p.a. - 2020, All rights reserved

8,7 mm (0.343") THICKNESS
RAISED RIB

The ideal ratio rib thickness/spacing offers high support even for the most unstable products, such as PET bottles with petaloid bottom, cans, 3-piece cans.
Optimum liquid drainage and good mechanical strength.

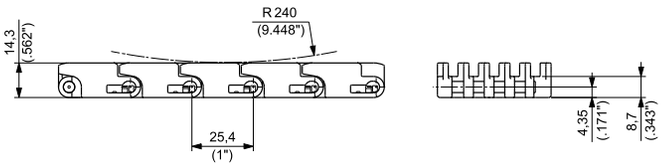

Materials see page 12
Combs see page 209
Sprockets see pages 212÷218
Applications see page 22

MATERIALS Plate	MATERIALS Pin	ITEM DESCRIPTION	PART NUMBER	WIDTH W mm	WIDTH W inch	PLATE THICKNESS mm	PLATE THICKNESS inch	WORKING LOAD (25°C/77°F) N	WORKING LOAD (25°C/77°F) lbs	WEIGHT kg/m	WEIGHT lbs/ft
ULTRA PERFORMANCE HOMOPOLYMER DELRIN ® UP	PBT	RR1600A UP K 30	R1600AUPKMA/000	30,0	1.18	8,7	0.343	700	157	0,39	0.26
		RR1600A UP K 38,5	R1600AUPKMB/000	38,5	1.52	8,7	0.343	950	214	0,49	0.33
		RR1600A UP K 47	R1600AUPKNB/000	47,0	1.85	8,7	0.343	1150	259	0,60	0.40
		RR1600A UP K 58	R1600AUPKPB/000	58,0	2.28	8,7	0.343	1400	315	0,75	0.50
SPECIAL POLYPROPYLENE[1] PP		RR1600A PP K 30	R1600APPKMA/000	30,0	1.18	8,7	0.343	700	157	0,26	0.17
		RR1600A PP K 38,5	R1600APPKMB/000	38,5	1.52	8,7	0.343	950	214	0,33	0.22
		RR1600A PP K 47	R1600APPKNB/000	47,0	1.85	8,7	0.343	1150	259	0,40	0.27
		RR1600A PP K 58	R1600APPKPB/000	58,0	2.28	8,7	0.343	1400	315	0,49	0.33

[1] ACTUAL WIDTH CAN BE UP TO 0,5% GREATER THAN NOMINAL WIDTH

Standard packaging:
Rolls of 3,048 m (10 feet)

Copyright Regina Catene Calibrate s.p.a. - 2020, All rights reserved

TRANSFER COMBS

Combs are supplied with slot covers but without fastening screws.
One fastening screw is required for each comb.
It can be ordered using P/N 16300020.

MATERIALS		
COMBS:	DG	ACETAL RESIN
SCREWS*:	SS	STAINLESS STEEL

*Screws are not included in the combs.

COMB FOR K 58 CHAIN

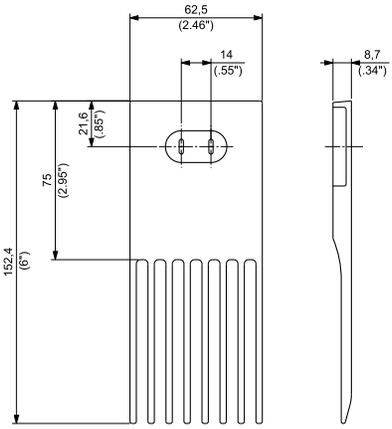

PART NUMBER **TC1600-01**

COMB FOR K 47 CHAIN

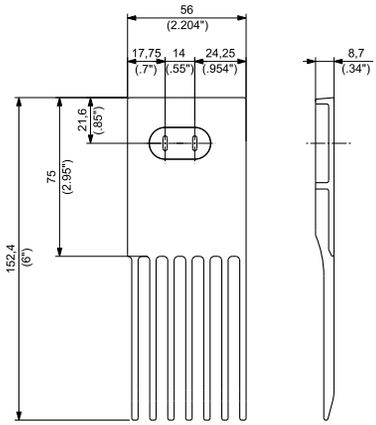

PART NUMBER **TC1600-02**

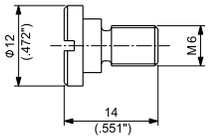

PART NUMBER **16300020**

COMB FOR K 38,5 CHAIN

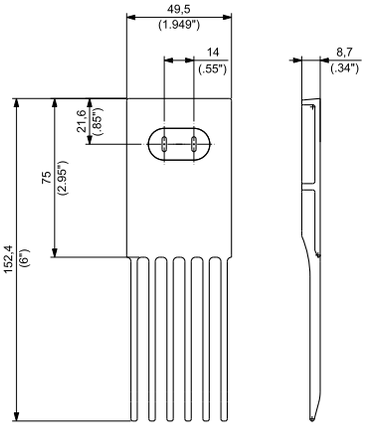

PART NUMBER **TC1600-03**

COMB FOR K 30 CHAIN

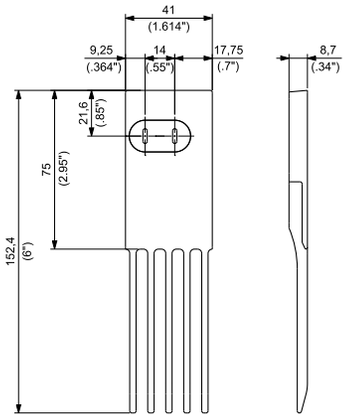

PART NUMBER **TC1600-04**

Copyright Regina Catene Calibrate s.p.a. - 2020, All rights reserved

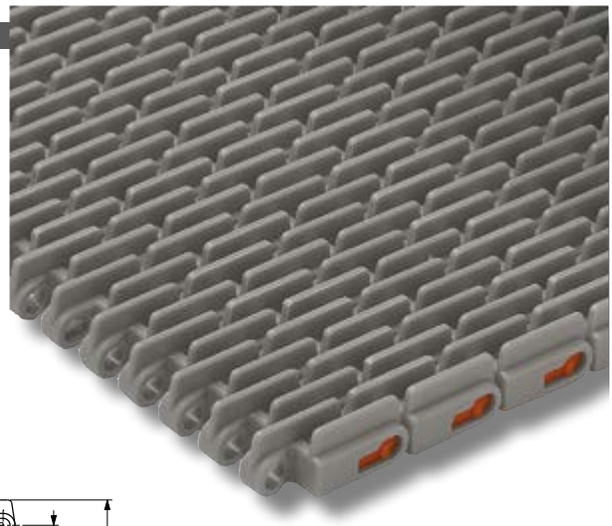

9,6 mm (0.378") THICKNESS
RAISED RIB

This belt allows the head transfer of the products by using transfer combs and has a open area to allow liquid drainage and belt cleaning.
Particularly suitable for product infeed of packaging machines.

- **Belt widths:** 152,4 mm (6") or wider in 76,2 mm (3") increments
- **Working Load (at 25°C/77°F):** 21580 N/m (1,480 lbs/ft) for UP material
  10920 N/m (748 lbs/ft) for PP material
- **Belt weight: :** 9,27 kg/m² (1.90 lbs/ft²) for UP material
  6,16 kg/m² (1.26 lbs/ft²) for PP material

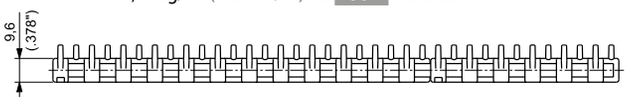

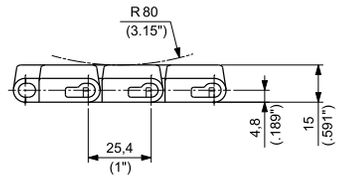

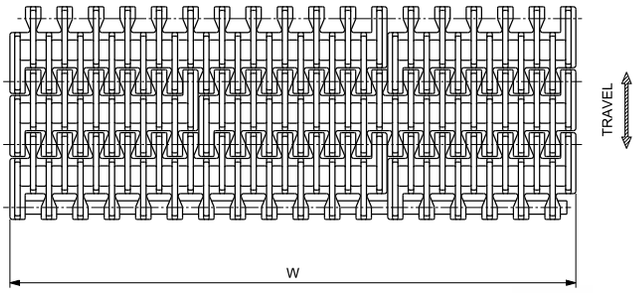

Materials see page 12
Combs see page 211
Sprockets see pages 212÷218
Applications see page 22

WIDTH W		MATERIALS		
		Module		Pin
		UP ULTRA PERFORMANCE HOMOPOLYMER DELRIN ®	PP SPECIAL POLYPROPYLENE[1]	
mm	inch	PART NUMBER	PART NUMBER	
152,4	6	**1110UP006**	**1110PP006**	POLYPROPYLENE
228,6	9	**1110UP009**	**1110PP009**	
304,8	12	**1110UP012**	**1110PP012**	
381,0	15	**1110UP015**	**1110PP015**	
457,2	18	**1110UP018**	**1110PP018**	
533,4	21	**1110UP021**	**1110PP021**	
609,6	24	**1110UP024**	**1110PP024**	
685,8	27	**1110UP027**	**1110PP027**	
762,0	30	**1110UP030**	**1110PP030**	
838,2	33	**1110UP033**	**1110PP033**	
914,4	36	**1110UP036**	**1110PP036**	
990,6	39	**1110UP039**	**1110PP039**	
1066,8	42	**1110UP042**	**1110PP042**	
1143,0	45	**1110UP045**	**1110PP045**	
1219,2	48	**1110UP048**	**1110PP048**	
1295,4	51	**1110UP051**	**1110PP051**	
1371,6	54	**1110UP054**	**1110PP054**	
1447,8	57	**1110UP057**	**1110PP057**	
1524,0	60	**1110UP060**	**1110PP060**	

[1] ACTUAL WIDTH CAN BE UP TO 1% GREATER THAN NOMINAL WIDTH

Belts wider than 1524 mm (60") are available in 76,2 mm (3") increments.
To identify the Part Numbers, please substitute the last three digits of the PN with the desired width.
Example: for a 63" wide belt (=60+3 inches), the PN for PP material is "1110PP063".

Standard packaging:
Belts are supplied in the length requested by the customer.

Copyright Regina Catene Calibrate s.p.a. - 2020, All rights reserved

TRANSFER COMBS

Combs are supplied with slot covers but without fastening screws.
Two fastening screws are required for each comb.
They can be ordered using P/N 16300020.

Special note: the comb fastening screws for 1110 belts are not interchangeable with fastening screws for 3125 belts.

MATERIALS		
COMBS:	DG	ACETAL RESIN
SCREWS*:	SS	STAINLESS STEEL

*Screws are not included in the combs.

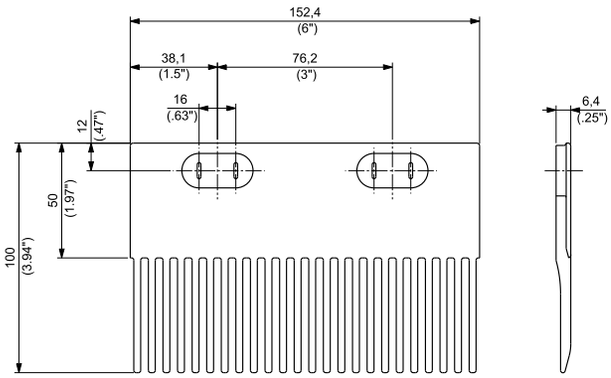

PART NUMBER **TC1110-01**

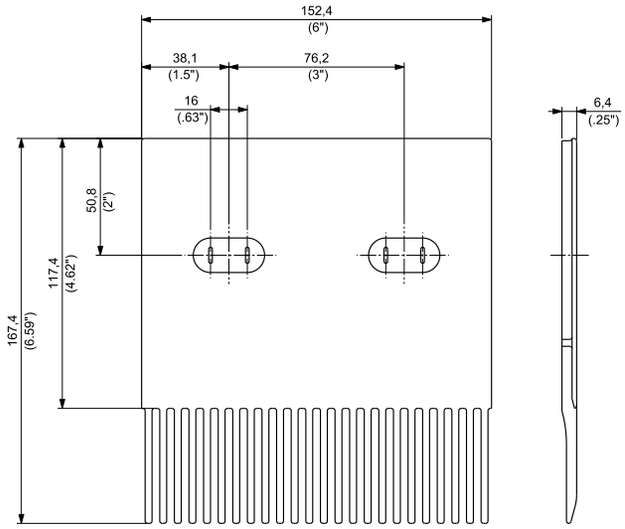

PART NUMBER **TC1110-02**

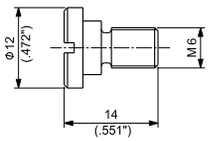

PART NUMBER **16300020**

Copyright Regina Catene Calibrate s.p.a. - 2020, All rights reserved

SUITABLE FOR CHAINS:

- **1500**
- **1600**
- **HF 1600**
- **HFS 1600**
- **RR 1500**
- **RR 1600**
- **1110**

MATERIALS	
SPROCKETS:	PGF REINFORCED POLYAMIDE

8T & 12T SPROCKETS

(for 13T , 18T, 19T & 21T see next pages)

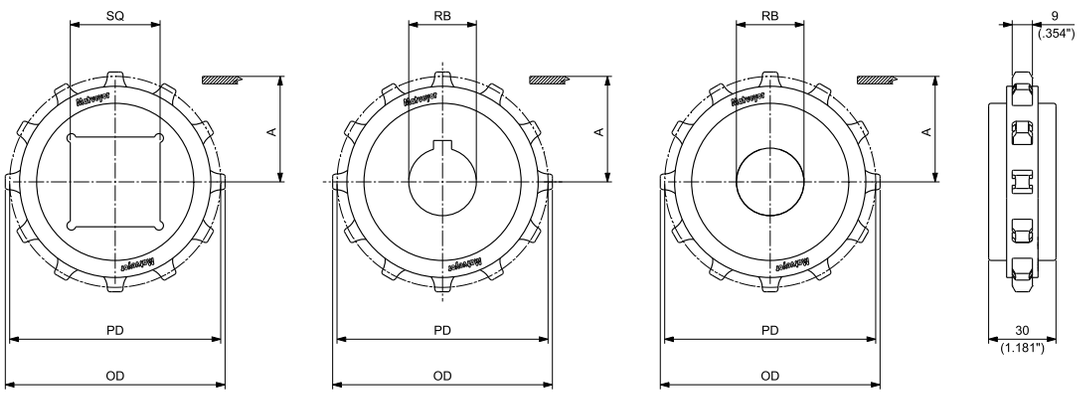

SQUARE BORE - DRIVE/IDLER ROUND BORE - DRIVE ROUND BORE - IDLER

NOTE: FOR 8T SPROCKET, THE HUB WIDTH IS 25 mm (0.984")

MOULDED SOLID DRIVE AND IDLER SPROCKETS

N. TEETH	PITCH DIAMETER PD		OUTSIDE DIAMETER OD		WEAR STRIP POSITIONING A		BORE SIZE*		PART NUMBER SQUARE BORE SQ	PART NUMBER ROUND BORE RB		WEIGHT	
	mm	inch	mm	inch	mm	inch	mm	inch	DRIVE/IDLER	DRIVE	IDLER	Kg	lbs
8	66,37	2.613	64,50	2.539	28,80	1.134	20			**MPBT10100820**	**MPBF10100820**	0,05	0.11
							25			**MPBT10100825**	**MPBF10100825**	0,04	0.10
							30			**MPBT10100830**	**MPBF10100830**	0,04	0.08
								1¼		**MPBT101008254**	**MPBF101008254**	0,04	0.10
								1½		**MPBT101008317**	**MPBF101008317**	0,03	0.07
12	98,14	3.864	97,90	3.854	44,70	1.760	30			**MPBT10101230**	**MPBF10101230**	0,14	0.30
							35			**MPBT10101235**	**MPBF10101235**	0,13	0.28
							40		**MPBQ10101240**	**MPBT10101240**	**MPBF10101240**	0,12	0.27
								1 3/16		**MPBT101012301**	**MPBF101012301**	0,14	0.30
								1 7/16		**MPBT101012365**	**MPBF101012365**	0,12	0.27
								1½		**MPBT101012381**	**MPBF101012381**	0,12	0.26

*In case of round bore, diameter is indicated. In case of square bore, side of the square is indicated.

Copyright Regina Catene Calibrate s.p.a. - 2020, All rights reserved

SUITABLE FOR CHAINS:

- **1500**
- **1600**
- **HF 1600**
- **HFS 1600**
- **RR 1500**
- **RR 1600**
- **1110**

MATERIALS
SPROCKETS: PGF REINFORCED POLYAMIDE

13T & 18T SPROCKETS

(for 19T & 21T see next page, for 8T & 12T see previous page)

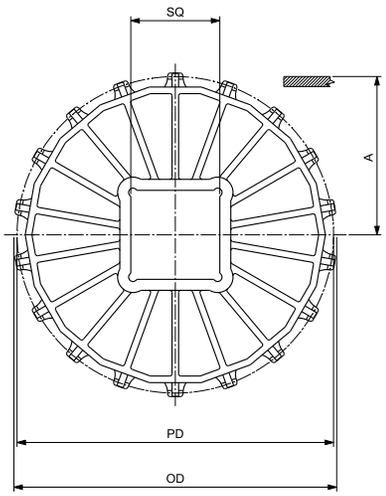

SQUARE BORE - DRIVE/IDLER

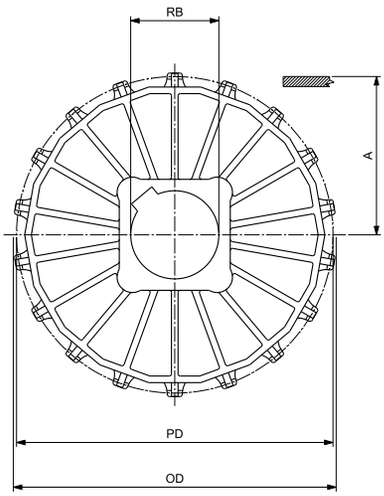

ROUND BORE - DRIVE

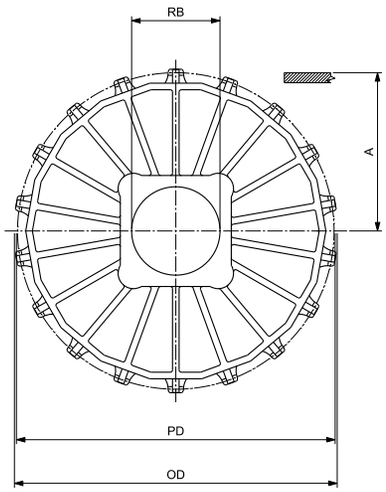

ROUND BORE - IDLER

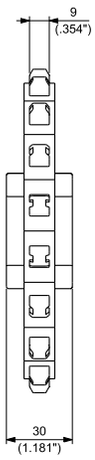

MOULDED SOLID DRIVE AND IDLER SPROCKETS

N. TEETH	PITCH DIAMETER PD		OUTSIDE DIAMETER OD		WEAR STRIP POSITIONING A		BORE SIZE*		PART NUMBER SQUARE BORE SQ DRIVE/IDLER	PART NUMBER ROUND BORE RB DRIVE	PART NUMBER ROUND BORE RB IDLER	WEIGHT	
	mm	inch	mm	inch	mm	inch	mm	inch				Kg	lbs
13	106,14	4.179	106,20	4.181	48,70	1.917	30			**MPBT10101330**	**MPBF10101330**	0,17	0.38
							35			**MPBT10101335**	**MPBF10101335**	0,15	0.33
							40		**MPBQ10101340**	**MPBT10101340**	**MPBF10101340**	0,16	0.36
								1 3/16		**MPBT101013301**	**MPBF101013301**	0,17	0.38
								1 7/16		**MPBT101013365**	**MPBF101013365**	0,16	0.35
								1½	**MPBQ10101381**	**MPBT101013381**	**MPBF101013381**	0,15	0.34
18	146,27	5.759	147,20	5.795	68,80	2.709	30			**MPBT10101830**	**MPBF10101830**	0,19	0.41
							35			**MPBT10101835**	**MPBF10101835**	0,21	0.47
							40		**MPBQ10101840**	**MPBT10101840**	**MPBF10101840**	0,20	0.44
							60		**MPBQ10101860**			0,16	0.36
								1 3/16		**MPBT101018301**		0,21	0.46
								1 7/16		**MPBT101018365**	**MPBF101018365**	0,20	0.43
								1½		**MPBT101018381**	**MPBF101018381**	0,19	0.42

*In case of round bore, diameter is indicated. In case of square bore, side of the square is indicated.

Copyright Regina Catene Calibrate s.p.a. - 2020, All rights reserved

SUITABLE FOR CHAINS:

- **1500**
- **1600**
- **HF 1600**
- **HFS 1600**
- **RR 1500**
- **RR 1600**
- **1110**

MATERIALS

SPROCKETS: **PGF** REINFORCED POLYAMIDE

19T & 21T SPROCKETS

(for 8T, 12T, 13T & 18T see previous pages)

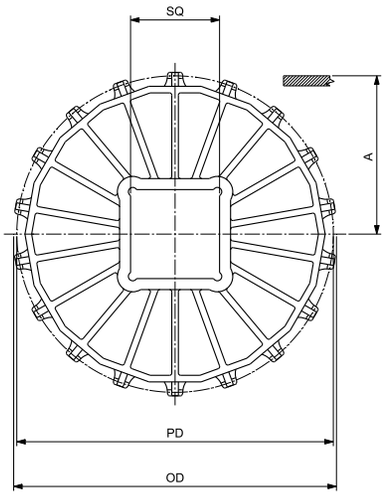

SQUARE BORE - DRIVE/IDLER

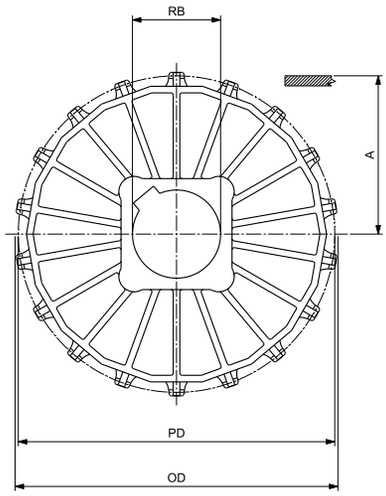

ROUND BORE - DRIVE

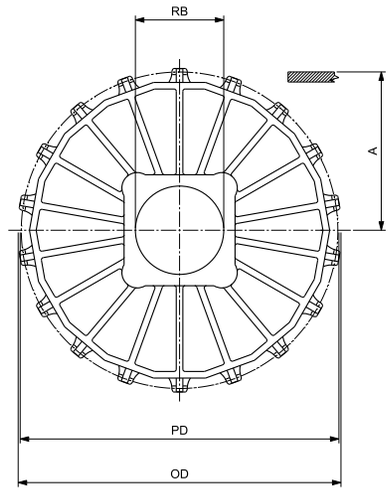

ROUND BORE - IDLER

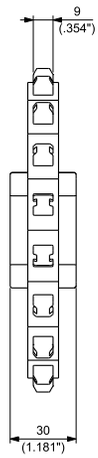

MOULDED SOLID DRIVE AND IDLER SPROCKETS

N. TEETH	PITCH DIAMETER PD		OUTSIDE DIAMETER OD		WEAR STRIP POSITIONING A		BORE SIZE*		PART NUMBER SQUARE BORE SQ DRIVE/IDLER	PART NUMBER ROUND BORE RB DRIVE	PART NUMBER ROUND BORE RB IDLER	WEIGHT	
	mm	inch	mm	inch	mm	inch	mm	inch				Kg	lbs
19	154,32	6.076	155,30	6.114	72,80	2.866	30			**MPBT10101930**	**MPBF10101930**	0,18	0.41
							35			**MPBT10101935**	**MPBF10101935**	0,17	0.38
							40		**MPBQ10101940**	**MPBT10101940**	**MPBF10101940**	0,16	0.35
							50			**MPBT10101950**	**MPBF10101950**	0,19	0.42
							60		**MPBQ10101960**	**MPBT10101960**	**MPBF10101960**	0,15	0.34
							65		**MPBQ10101965**			0,17	0.37
								1		**MPBT101019254**	**MPBF101019254**	0,19	0.43
								1 3/16		**MPBT101019301**	**MPBF101019301**	0,18	0.41
								1 7/16		**MPBT101019365**	**MPBF101019365**	0,17	0.37
								1½	**MPBQ101019381**	**MPBT101019381**	**MPBF101019381**	0,17	0.36
								2½	**MPBQ101019635**			0,17	0.37
21	170,42	6.709	171,60	6.756	80,90	3.185	30			**MPBT10102130**	**MPBF10102130**	0,27	0.59
							35			**MPBT10102135**	**MPBF10102135**	0,26	0.57
							40		**MPBQ10102140**	**MPBT10102140**	**MPBF10102140**	0,25	0.54
							50			**MPBT10102150**	**MPBF10102150**	0,29	0.64
							60		**MPBQ10102160**			0,22	0.49
								1 3/16		**MPBT101021301**	**MPBF101021301**	0,27	0.59
								1 7/16		**MPBT101021365**	**MPBF101021365**	0,25	0.56
								1½	**MPBQ101021381**	**MPBT101021381**	**MPBF101021381**	0,25	0.55

*In case of round bore, diameter is indicated. In case of square bore, side of the square is indicated.

Copyright Regina Catene Calibrate s.p.a. - 2020, All rights reserved

SUITABLE FOR CHAINS:

- **1500**
- **1600**
- **HF 1600**
- **HFS 1600**
- **RR 1500**
- **RR 1600**
- **1110**

MATERIALS

SPROCKETS: **PA** POLYAMIDE

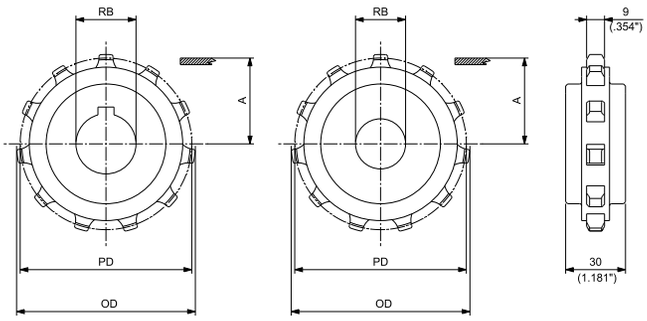

ROUND BORE - DRIVE

ROUND BORE - IDLER

MACHINED SOLID DRIVE AND IDLER SPROCKETS

N. TEETH	PITCH DIAMETER PD		OUTSIDE DIAMETER OD		WEAR STRIP POSITIONING A		BORE SIZE*		PART NUMBER ROUND BORE RB		WEIGHT	
	mm	inch	mm	inch	mm	inch	mm	inch**	DRIVE	IDLER	Kg	lbs
10	82,20	3.236	81,30	3.201	36,70	1.445	25		**MPBAT10101025**	**MPBAF10101025**	0,09	0.19
							30		**MPBAT10101030**	**MPBAF10101030**	0,08	0.18
								1	**MPBAT101010254**	**MPBAF101010254**	0,09	0.19
								1¼	**MPBAT101010317**	**MPBAF101010317**	0,08	0.17
								1½	**MPBAT101010381**	**MPBAF101010381**	0,07	0.14
11	90,16	3.550	89,60	3.528	40,70	1.602	25		**MPBAT10101125**	**MPBAF10101125**	0,11	0.25
							30		**MPBAT10101130**	**MPBAF10101130**	0,11	0.23
								1	**MPBAT101011254**	**MPBAF101011254**	0,11	0.25
								1¼	**MPBAT101011317**	**MPBAF101011317**	0,10	0.23
								1½	**MPBAT101011381**	**MPBAF101011381**	0,09	0.20

*Diameter is indicated.

** Imperial round bore drive sprockets are supplied with setscrew. Metric round bore drive sprockets are supplied without setscrew.

Copyright Regina Catene Calibrate s.p.a. - 2020, All rights reserved

SPROCKETS - **1010 SERIES**

SUITABLE FOR CHAINS:

- **1500**
- **1600**
- **HF 1600**
- **HFS 1600**
- **RR 1500**
- **RR 1600**
- **1110**

MATERIALS		
SPROCKETS:	PGF	REINFORCED POLYAMIDE
SCREW:	SS	STAINLESS STEEL
NUTS:	S+NC	ZINC PLATED STEEL

16T & 18T SPROCKETS

(for 19T & 20T see next page)

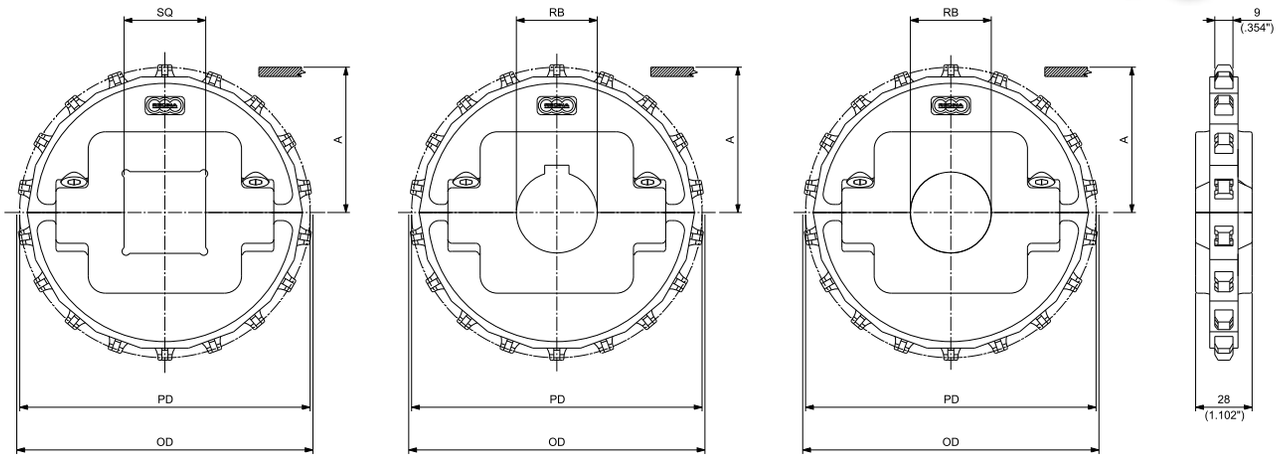

SQUARE BORE - DRIVE/IDLER | ROUND BORE - DRIVE | ROUND BORE - IDLER

MOULDED SPLIT DRIVE AND IDLER SPROCKETS

N. TEETH	PITCH DIAMETER PD		OUTSIDE DIAMETER OD		WEAR STRIP POSITIONING A		BORE SIZE*		PART NUMBER SQUARE BORE SQ	PART NUMBER ROUND BORE RB		WEIGHT	
	mm	inch	mm	inch	mm	inch	mm	inch**	DRIVE/IDLER	DRIVE	IDLER	Kg	lbs
							30			MPBST10101630	MPBSF10101630	0,27	0.59
							35			MPBST10101635	MPBSF10101635	0,26	0.58
							40		MPBSQ10101640	MPBST10101640	MPBSF10101640	0,25	0.56
							45			MPBST10101645	MPBSF10101645	0,25	0.54
							50		MPBSQ10101650	MPBST10101650	MPBSF10101650	0,24	0.52
16	130,20	5.126	130,10	5.122	60,70	2.390	60		MPBSQ10101660			0,19	0.42
								1		MPBST101016254	MPBSF101016254	0,27	0.61
								1 3/16		MPBST101016301	MPBSF101016301	0,27	0.59
								1 1/4		MPBST101016317	MPBSF101016317	0,27	0.59
								1 7/16		MPBST101016365	MPBSF101016365	0,26	0.57
								1 1/2	MPBSQ101016381	MPBST101016381	MPBSF101016381	0,26	0.57
							30			MPBST10101830	MPBSF10101830	0,32	0.71
							35			MPBST10101835	MPBSF10101835	0,32	0.70
							40		MPBSQ10101840	MPBST10101840	MPBSF10101840	0,31	0.68
							45			MPBST10101845	MPBSF10101845	0,30	0.66
							50		MPBSQ10101850	MPBST10101850	MPBSF10101850	0,29	0.64
18	146,27	5.759	146,50	5.768	68,80	2.709	60		MPBSQ10101860	MPBST10101860	MPBSF10101860	0,27	0.59
								1		MPBST101018254	MPBSF101018254	0,33	0.72
								1 3/16		MPBST101018301	MPBSF101018301	0,32	0.71
								1 1/4		MPBST101018317	MPBSF101018317	0,32	0.71
								1 7/16		MPBST101018365	MPBSF101018365	0,31	0.69
								1 1/2	MPBSQ101018381	MPBST101018381	MPBSF101018381	0,31	0.69
								2		MPBST101018508	MPBSF101018508	0,29	0.63

*In case of round bore, diameter is indicated. In case of square bore, side of the square is indicated.
** Imperial round bore drive sprockets are supplied with setscrew. Metric round bore drive sprockets are supplied without setscrew.

Copyright Regina Catene Calibrate s.p.a. - 2020, All rights reserved

Matveyor

SUITABLE FOR CHAINS:

- **1500**
- **1600**
- **HF 1600**
- **HFS 1600**
- **RR 1500**
- **RR 1600**
- **1110**

MATERIALS		
SPROCKETS:	PGF	REINFORCED POLYAMIDE
SCREW:	SS	STAINLESS STEEL
NUTS:	S+NC	ZINC PLATED STEEL

19T & 20T SPROCKETS

(for 16T & 18T see previous page)

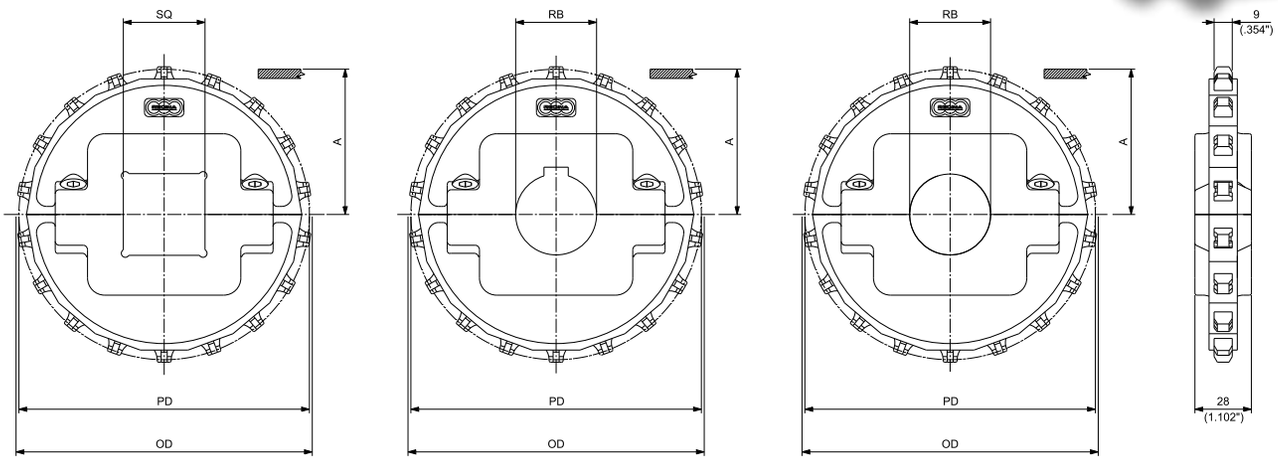

SQUARE BORE - DRIVE/IDLER

ROUND BORE - DRIVE

ROUND BORE - IDLER

MOULDED SPLIT DRIVE AND IDLER SPROCKETS

N. TEETH	PITCH DIAMETER PD		OUTSIDE DIAMETER OD		WEAR STRIP POSITIONING A		BORE SIZE*		PART NUMBER SQUARE BORE SQ DRIVE/IDLER	PART NUMBER ROUND BORE RB DRIVE	PART NUMBER ROUND BORE RB IDLER	WEIGHT	
	mm	inch	mm	inch	mm	inch	mm	inch**				Kg	lbs
							30			**MPBST10101930**	**MPBSF10101930**	0,33	0.72
							35			**MPBST10101935**	**MPBSF10101935**	0,32	0.71
							40		**MPBSQ10101940**	**MPBST10101940**	**MPBSF10101940**	0,31	0.69
							45			**MPBST10101945**	**MPBSF10101945**	0,30	0.67
							50		**MPBSQ10101950**	**MPBST10101950**	**MPBSF10101950**	0,30	0.65
19	154,32	6.076	154,60	6.087	72,80	2.866	60		**MPBSQ10101960**	**MPBST10101960**	**MPBSF10101960**	0,27	0.61
								1		**MPBST101019254**	**MPBSF101019254**	0,35	0.77
								1 3/16		**MPBST101019301**	**MPBSF101019301**	0,33	0.72
								1 1/4		**MPBST101019317**	**MPBSF101019317**	0,32	0.71
								1 7/16		**MPBST101019365**	**MPBSF101019365**	0,32	0.70
								1 1/2	**MPBSQ101019381**	**MPBST101019381**	**MPBSF101019381**	0,32	0.70
								2		**MPBST101019508**	**MPBSF101019508**	0,28	0.62
								2 1/2	**MPBSQ101019635**			0,25	0.54
							30			**MPBST10102030**	**MPBSF10102030**	0,35	0.78
							35			**MPBST10102035**	**MPBSF10102035**	0,35	0.77
							40		**MPBSQ10102040**	**MPBST10102040**	**MPBSF10102040**	0,34	0.75
							50			**MPBST10102050**	**MPBSF10102050**	0,32	0.71
							60		**MPBSQ10102060**	**MPBST10102060**	**MPBSF10102060**	0,30	0.66
							65		**MPBSQ10102065**			0,26	0.58
20	162,37	6.393	162,80	6.409	76,80	3.024		1		**MPBST101020254**	**MPBSF101020254**	0,36	0.79
								1 3/16		**MPBST101020301**	**MPBSF101020301**	0,35	0.78
								1 1/4		**MPBST101020317**	**MPBSF101020317**	0,35	0.78
								1 7/16		**MPBST101020365**	**MPBSF101020365**	0,35	0.76
								1 1/2	**MPBSQ101020381**	**MPBST101020381**	**MPBSF101020381**	0,34	0.76
								2		**MPBST101020508**	**MPBSF101020508**	0,32	0.71
								2 1/2	**MPBSQ101020635**			0,27	0.59

*In case of round bore, diameter is indicated. In case of square bore, side of the square is indicated.

** Imperial round bore drive sprockets are supplied with setscrew. Metric round bore drive sprockets are supplied without setscrew.

Copyright Regina Catene Calibrate s.p.a. - 2020, All rights reserved

SUITABLE FOR CHAINS:

- 1500
- 1600
- HF 1600
- HFS 1600
- RR 1500
- RR 1600
- 1110

MATERIALS		
SPROCKETS:	PA	POLYAMIDE
SCREWS:	SS	STAINLESS STEEL
NUTS:	B	BRASS

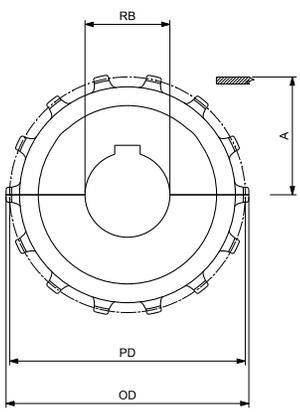

ROUND BORE - DRIVE

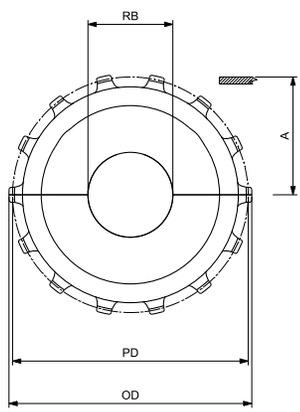

ROUND BORE - IDLER

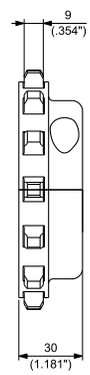

MOULDED SOLID IDLER WHEELS
SEE PAGE 123

MOULDED SPLIT IDLER WHEELS
SEE PAGE 186

MACHINED SPLIT IDLER WHEELS
SEE PAGE 125

MACHINED SPLIT DRIVE AND IDLER SPROCKETS

N. TEETH	PITCH DIAMETER PD		OUTSIDE DIAMETER OD		WEAR STRIP POSITIONING A		BORE SIZE*		PART NUMBER ROUND BORE RB		WEIGHT	
	mm	inch	mm	inch	mm	inch	mm	inch**	DRIVE	IDLER	Kg	lbs
							25		**MPBAST10101425**	**MPBASF10101425**	0,26	0.57
							30		**MPBAST10101430**	**MPBASF10101430**	0,25	0.55
							35		**MPBAST10101435**	**MPBASF10101435**	0,24	0.53
							40		**MPBAST10101440**	**MPBASF10101440**	0,23	0.51
14	114,15	4.494	114,40	4.504	52,70	2.075		1	**MPBAST101014254**	**MPBASF101014254**	0,26	0.56
								1 3/16	**MPBAST101014301**	**MPBASF101014301**	0,25	0.55
								1 1/4	**MPBAST101014317**	**MPBASF101014317**	0,25	0.54
								1 7/16	**MPBAST101014365**	**MPBASF101014365**	0,24	0.52
								1 1/2	**MPBAST101014381**	**MPBASF101014381**	0,23	0.52

*Diameter is indicated.
** Imperial round bore drive sprockets are supplied with setscrew. Metric round bore drive sprockets are supplied without setscrew.

Copyright Regina Catene Calibrate s.p.a. - 2020, All rights reserved

PERFORMANCE IN MOTION

Matveyor®

¾" Pitch Medium Duty Belts and Chains

INDUSTRIES AND APPLICATIONS

Suitable for handling loose & packaged products, such as plastic & glass bottles and aluminium & steel cans, in medium duty applications.

INDUSTRIES

Bottling and canning
Food filling
Container manufacturing
Pharmaceutical
Paper/cardboard
Consumer goods

APPLICATIONS

Depalletizer
Pressureless Inliners and Combiners
Single lane & mass conveyors
Accumulation tables
Infeed packaging machines
Case conveyors
Palletizers

FEATURES

- Smooth and uniform top surface, thanks to location of retention clip underneath modules and reduced gaps between hinges.

- Maximized bottom sliding surface to guarantee limited wear.

- The optimized design and location of retention clip, which can be easily rotated from both the bottom and the side of the belt, results in an easy belt assembly and disassembly.

SIDE

BOTTOM

- The belts can be used on conveyors side by side with Magnetic or TAB sideflexing chains 782 or 783 series allowing a smooth products transfer between straight running and sideflexing conveyors.

Copyright Regina Catene Calibrate s.p.a. - 2020, All rights reserved

8,7 mm (0.343") THICKNESS
SOLID TOP

DUPONT® KEVLAR® INSIDE

e-F.A.S.T. ECOLOGICAL FRICTION ABATING THERMO-PLASTIC

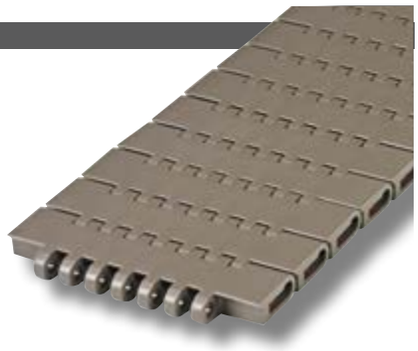

Extremely good flatness, manufacturing accuracy, and low coefficient of friction, make the side transfer of the products very easy.
Completely closed surface, no gap between the modules, even when engaging on the sprockets.
Particularly suitable for glass products, small sized products and unstable containers (for example PET bottles with petaloid base).

VERSION WITHOUT TRACKING GUIDE

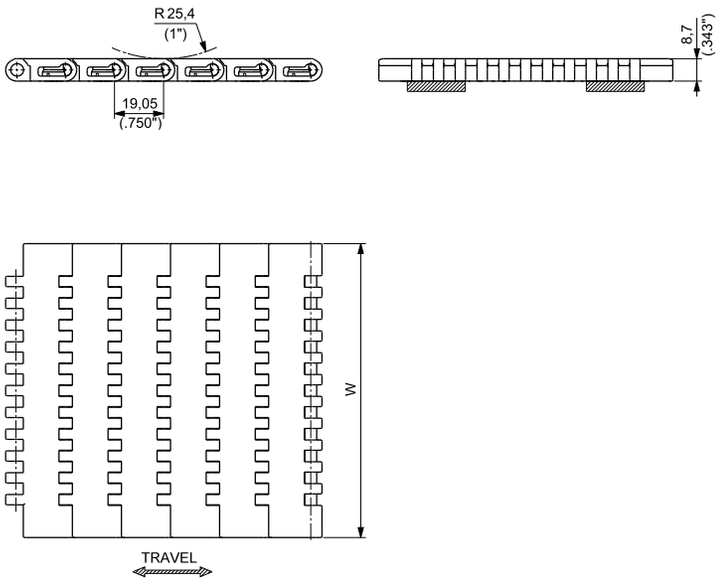

VERSION WITH TRACKING GUIDE

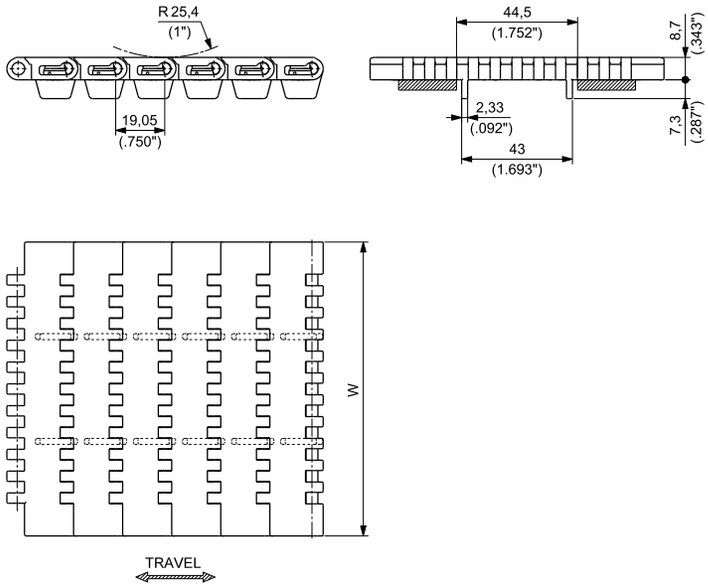

Materials see page 12
Sprockets see pages 220÷222
Applications see page 22

MATERIALS Plate	MATERIALS Pin	VERSION	ITEM DESCRIPTION	PART NUMBER	WIDTH W mm	WIDTH W inch	PLATE THICKNESS mm	PLATE THICKNESS inch	WORKING LOAD (25°C/77°F) N	WORKING LOAD (25°C/77°F) lbs	WEIGHT kg/m	WEIGHT lbs/ft
ULTRA PERFORMANCE HOMOPOLYMER DELRIN ® UP		WITHOUT TRACKING GUIDE	7300 UP 325	7300UPKD/000	82,6	3.25	8,7	0.343	2300	517	0,84	0.57
			7300 UP 450	7300UPKG/000	114,3	4.50	8,7	0.343	3290	740	1,15	0.77
			7300 UP 600	7300UPKH/000	152,4	6.00	8,7	0.343	4370	982	1,51	1.01
			7300 UP 750	7300UPKL/000	190,5	7.50	8,7	0.343	5450	1225	1,87	1.26
SPECIAL DELRIN ® REINFORCED WITH KEVLAR ® DK2™	PBT		7300 D2K 325	7300D2KKD/000	82,6	3.25	8,7	0.343	2300	517	0,84	0.57
			7300 D2K 450	7300D2KKG/000	114,3	4.50	8,7	0.343	3290	740	1,15	0.77
			7300 D2K 600	7300D2KKH/000	152,4	6.00	8,7	0.343	4370	982	1,51	1.01
			7300 D2K 750	7300D2KKL/000	190,5	7.50	8,7	0.343	5450	1225	1,87	1.26
NEW ECOLOGICAL FRICTION ABATING THERMOPLASTIC e-F.A.S.T.			7300 EF 325	7300EFKD/000	82,6	3.25	8,7	0.343	2300	517	0,84	0.57
			7300 EF 450	7300EFKG/000	114,3	4.50	8,7	0.343	3290	740	1,15	0.77
			7300 EF 600	7300EFKH/000	152,4	6.00	8,7	0.343	4370	982	1,51	1.01
			7300 EF 750	7300EFKL/000	190,5	7.50	8,7	0.343	5450	1225	1,87	1.26
ULTRA PERFORMANCE HOMOPOLYMER DELRIN ® UP		WITH TRACKING GUIDE	7300G UP 325	7300GUPKD/000	82,6	3.25	8,7	0.343	2300	517	0,84	0.57
			7300G UP 450	7300GUPKG/000	114,3	4.50	8,7	0.343	3290	740	1,15	0.77
			7300G UP 600	7300GUPKH/000	152,4	6.00	8,7	0.343	4370	982	1,51	1.01
			7300G UP 750	7300GUPKL/000	190,5	7.50	8,7	0.343	5450	1225	1,87	1.26
SPECIAL DELRIN ® REINFORCED WITH KEVLAR ® DK2™	PBT		7300G D2K 325	7300GD2KKD/000	82,6	3.25	8,7	0.343	2300	517	0,84	0.57
			7300G D2K 450	7300GD2KKG/000	114,3	4.50	8,7	0.343	3290	740	1,15	0.77
			7300G D2K 600	7300GD2KKH/000	152,4	6.00	8,7	0.343	4370	982	1,51	1.01
			7300G D2K 750	7300GD2KKL/000	190,5	7.50	8,7	0.343	5450	1225	1,87	1.26
NEW ECOLOGICAL FRICTION ABATING THERMOPLASTIC e-F.A.S.T.			7300G EF 325	7300GEFKD/000	82,6	3.25	8,7	0.343	2300	517	0,84	0.57
			7300G EF 450	7300GEFKG/000	114,3	4.50	8,7	0.343	3290	740	1,15	0.77
			7300G EF 600	7300GEFKH/000	152,4	6.00	8,7	0.343	4370	982	1,51	1.01
			7300G EF 750	7300GEFKL/000	190,5	7.50	8,7	0.343	5450	1225	1,87	1.26

Standard packaging: Rolls of 3,048 m (10 feet)

Copyright Regina Catene Calibrate s.p.a. - 2020, All rights reserved

8,7 mm (0.343") THICKNESS
SOLID TOP

This belt offers a smooth surface to provide excellent support and minimize product tippage.
Particulary suitable for glass products, small sized products and unstable containers
(for example PET bottles with petaloid base).

- **Belt widths:** 228,6 mm (9") or wider in 76,2 mm (3") increments
- **Working Load (at 25°C/77°F):** 30000 N/m (2,056 lbs/ft) for UP, DK2™ and e-F.A.S.T. materials
- **Belt weight:** 9,36 kg/m² (1.92 lbs/ft²) for UP, DK2™ and e-F.A.S.T. materials

DUPONT® KEVLAR® INSIDE

e-F.A.S.T. ECOLOGICAL FRICTION ABATING THERMO-PLASTIC

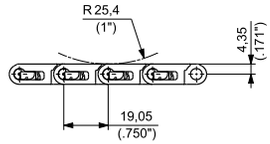

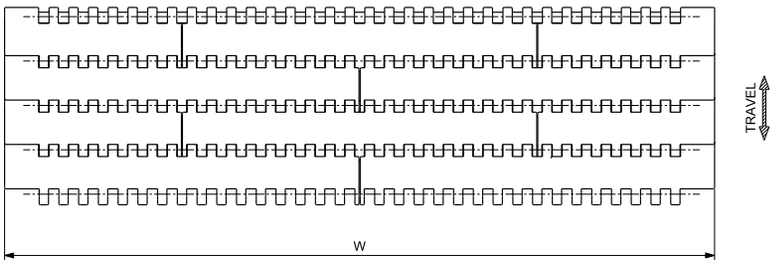

Materials see page 12
Sprockets see pages 220÷222
Applications see page 22

WIDTH W		MATERIALS			
		Module			Pin
		UP ULTRA PERFORMANCE HOMOPOLYMER DELRIN ®	DK2™ SPECIAL DELRIN ® REINFORCED WITH KEVLAR ®	NEW e-F.A.S.T. ECOLOGICAL FRICTION ABATING THERMOPLASTIC	
mm	inch	PART NUMBER	PART NUMBER		
228,6	9	**7300UP009**	**7300D2K009**	**7300EF009**	PBT
304,8	12	**7300UP012**	**7300D2K012**	**7300EF012**	
381,0	15	**7300UP015**	**7300D2K015**	**7300EF015**	
457,2	18	**7300UP018**	**7300D2K018**	**7300EF018**	
533,4	21	**7300UP021**	**7300D2K021**	**7300EF021**	
609,6	24	**7300UP024**	**7300D2K024**	**7300EF024**	
685,8	27	**7300UP027**	**7300D2K027**	**7300EF027**	
762,0	30	**7300UP030**	**7300D2K030**	**7300EF030**	
838,2	33	**7300UP033**	**7300D2K033**	**7300EF033**	
914,4	36	**7300UP036**	**7300D2K036**	**7300EF036**	
990,6	39	**7300UP039**	**7300D2K039**	**7300EF039**	
1066,8	42	**7300UP042**	**7300D2K042**	**7300EF042**	
1143,0	45	**7300UP045**	**7300D2K045**	**7300EF045**	
1219,2	48	**7300UP048**	**7300D2K048**	**7300EF048**	
1295,4	51	**7300UP051**	**7300D2K051**	**7300EF051**	
1371,6	54	**7300UP054**	**7300D2K054**	**7300EF054**	
1447,8	57	**7300UP057**	**7300D2K057**	**7300EF057**	
1524,0	60	**7300UP060**	**7300D2K060**	**7300EF060**	

Belts wider than 1524 mm (60") are available in 76,2 mm (3") increments.
To identify the Part Numbers, please substitute the last three digits of the PN with the desired width.
Example: for a 63" wide belt (=60+3 inches) the PN for UP material is "7300UP063".
On request belts available in ½" (8,5 mm) increments, starting from 9" (228,6 mm).

Standard packaging:
Belts are supplied in the length requested by the customer.

 Copyright Regina Catene Calibrate s.p.a. - 2020, All rights reserved

ACTIVE TRANSFER MODULES
8,7 mm (0.343") THICKNESS
SOLID TOP

DUPONT® KEVLAR® INSIDE

e-F.A.S.T. ECOLOGICAL FRICTION ABATING THERMO-PLASTIC

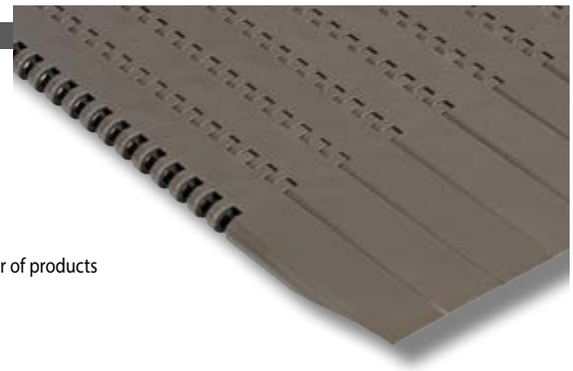

7300G ATM can be used in combination with 7300 modular belts. Active transfer modules 7300G ATM allow the transfer of products between two 90° conveyor tracks without using dead plates.
The special wing shaped module profile supports the products dynamically during transfer on the take-away belts.
Available left and right version.

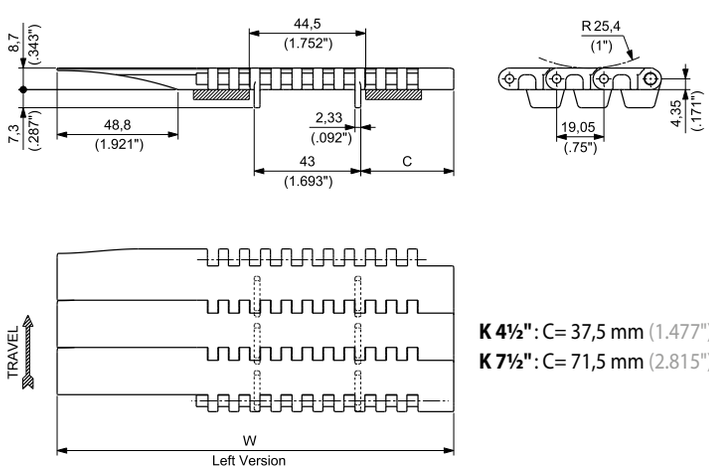

K 4½": C= 37,5 mm (1.477")
K 7½": C= 71,5 mm (2.815")

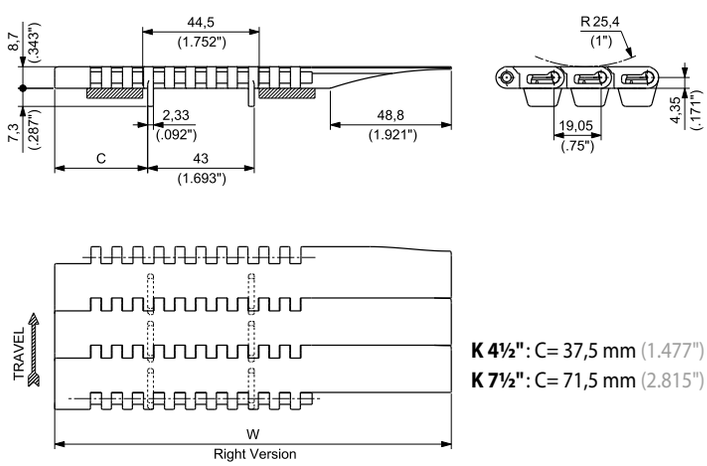

K 4½": C= 37,5 mm (1.477")
K 7½": C= 71,5 mm (2.815")

Materials see page 12
Sprockets see pages 220÷222
Applications see page 22

7300G ATM - Left Version

MATERIALS Plate	MATERIALS Pin	ITEM DESCRIPTION	PART NUMBER	WIDTH W mm	WIDTH W inch	PLATE THICKNESS mm	PLATE THICKNESS inch	WORKING LOAD (25°C/77°F) N	WORKING LOAD (25°C/77°F) lbs	WEIGHT kg/m	WEIGHT lbs/ft
ULTRA PERFORMANCE HOMOPOLYMER DELRIN® UP	PBT	7300GATM UP 450 SX	7300GATMUP450LH	160,0	6.30	8,7	0.343	3290	740	1,28	0.86
		7300GATM UP 750 SX	7300GATMUP750LH	236,2	9.30	8,7	0.343	4370	982	1,99	1.34
SPECIAL DELRIN ® REINFORCED WITH KEVLAR ® DK2™		7300GATM D2K 450 SX	7300GATMD2K450LH	160,0	6.30	8,7	0.343	3290	740	1,28	0.86
		7300GATM D2K 750 SX	7300GATMD2K750LH	236,2	9.30	8,7	0.343	4370	982	1,99	1.34
NEW ECOLOGICAL FRICTION ABATING THERMOPLASTIC e-F.A.S.T.		7300GATM EF 450 SX	7300GATMEF450LH	160,0	6.30	8,7	0.343	3290	740	1,28	0.86
		7300GATM EF 750 SX	7300GATMEF750LH	236,2	9.30	8,7	0.343	4370	982	1,99	1.34

7300G ATM - Right Version

MATERIALS Plate	MATERIALS Pin	ITEM DESCRIPTION	PART NUMBER	WIDTH W mm	WIDTH W inch	PLATE THICKNESS mm	PLATE THICKNESS inch	WORKING LOAD (25°C/77°F) N	WORKING LOAD (25°C/77°F) lbs	WEIGHT kg/m	WEIGHT lbs/ft
ULTRA PERFORMANCE HOMOPOLYMER DELRIN ® UP	PBT	7300GATM UP 450 DX	7300GATMUP450RH	160,0	6.30	8,7	0.343	3290	740	1,28	0.86
		7300GATM UP 750 DX	7300GATMUP750RH	236,2	9.30	8,7	0.343	4370	982	1,99	1.34
SPECIAL DELRIN ® REINFORCED WITH KEVLAR ® DK2™		7300GATM D2K 450 DX	7300GATMD2K450RH	160,0	6.30	8,7	0.343	3290	740	1,28	0.86
		7300GATM D2K 750 DX	7300GATMD2K750RH	236,2	9.30	8,7	0.343	4370	982	1,99	1.34
NEW ECOLOGICAL FRICTION ABATING THERMOPLASTIC e-F.A.S.T.		7300GATM EF 450 DX	7300GATMEF450RH	160,0	6.30	8,7	0.343	3290	740	1,28	0.86
		7300GATM EF 750 DX	7300GATMEF750RH	236,2	9.30	8,7	0.343	4370	982	1,99	1.34

Standard packaging: Rolls of 3,048 m (10 feet)

Copyright Regina Catene Calibrate s.p.a. - 2020, All rights reserved

8,7 mm (0.343") THICKNESS
FLUSH GRID

This belt has an excellent combination of open and support areas to allow drainage of liquids and good support of the conveyed product.
This belt is particularly suitable for conveying of aluminium cans.

DUPONT® KEVLAR® INSIDE

e-F.A.S.T. ECOLOGICAL FRICTION ABATING THERMO-PLASTIC

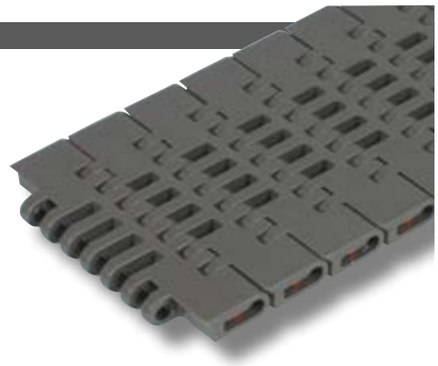

VERSION WITHOUT TRACKING GUIDE

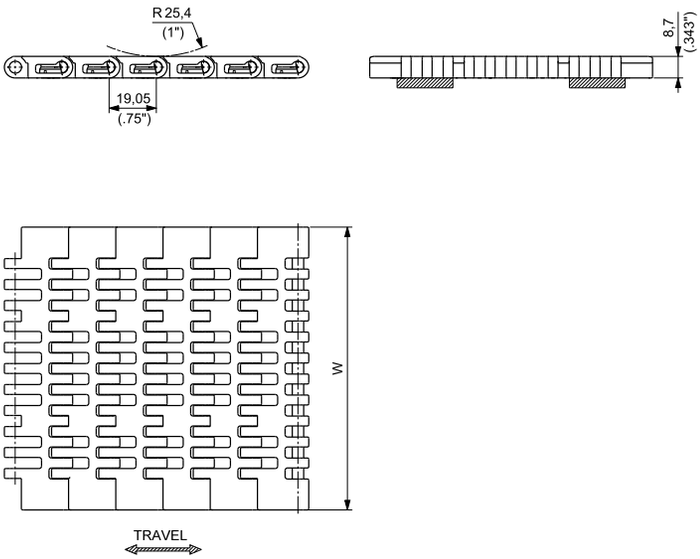

VERSION WITH TRACKING GUIDE

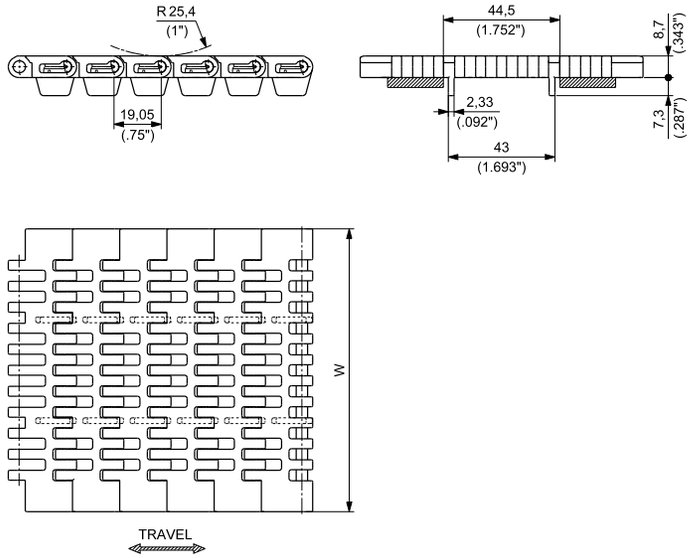

Materials see page 12

Sprockets see pages 220÷222

Applications see page 22

MATERIALS Plate	MATERIALS Pin	VERSION	ITEM DESCRIPTION	PART NUMBER	WIDTH W mm	WIDTH W inch	PLATE THICKNESS mm	PLATE THICKNESS inch	WORKING LOAD (25°C/77°F) N	WORKING LOAD (25°C/77°F) lbs	WEIGHT kg/m	WEIGHT lbs/ft
ULTRA PERFORMANCE HOMOPOLYMER DELRIN ® UP	PBT	WITHOUT TRACKING GUIDE	7200 UP 325	7200UPKD/000	82,6	3.25	8,7	0.343	2300	517	0,80	0.54
			7200 UP 450	7200UPKG/000	114,3	4.50	8,7	0.343	3290	740	1,08	0.72
			7200 UP 600	7200UPKH/000	152,4	6.00	8,7	0.343	4370	982	1,41	0.95
			7200 UP 750	7200UPKL/000	190,5	7.50	8,7	0.343	5450	1225	1,74	1.17
SPECIAL DELRIN ® REINFORCED WITH KEVLAR ® DK2™			7200 D2K 325	7200D2KKD/000	82,6	3.25	8,7	0.343	2300	517	0,80	0.54
			7200 D2K 450	7200D2KKG/000	114,3	4.50	8,7	0.343	3290	740	1,08	0.72
			7200 D2K 600	7200D2KKH/000	152,4	6.00	8,7	0.343	4370	982	1,41	0.95
			7200 D2K 750	7200D2KKL/000	190,5	7.50	8,7	0.343	5450	1225	1,74	1.17
NEW ECOLOGICAL FRICTION ABATING THERMOPLASTIC e-F.A.S.T.			7200 EF 325	7200EFKD/000	82,6	3.25	8,7	0.343	2300	517	0,80	0.54
			7200 EF 450	7200EFKG/000	114,3	4.50	8,7	0.343	3290	740	1,08	0.72
			7200 EF 600	7200EFKH/000	152,4	6.00	8,7	0.343	4370	982	1,41	0.95
			7200 EF 750	7200EFKL/000	190,5	7.50	8,7	0.343	5450	1225	1,74	1.17
ULTRA PERFORMANCE HOMOPOLYMER DELRIN ® UP	PBT	WITH TRACKING GUIDE	7200G UP 325	7200GUPKD/000	82,6	3.25	8,7	0.343	2300	517	0,80	0.54
			7200G UP 450	7200GUPKG/000	114,3	4.50	8,7	0.343	3290	740	1,08	0.72
			7200G UP 600	7200GUPKH/000	152,4	6.00	8,7	0.343	4370	982	1,41	0.95
			7200G UP 750	7200GUPKL/000	190,5	7.50	8,7	0.343	5450	1225	1,74	1.17
SPECIAL DELRIN ® REINFORCED WITH KEVLAR ® DK2™			7200G D2K 325	7200GD2KKD/000	82,6	3.25	8,7	0.343	2300	517	0,80	0.54
			7200G D2K 450	7200GD2KKG/000	114,3	4.50	8,7	0.343	3290	740	1,08	0.72
			7200G D2K 600	7200GD2KKH/000	152,4	6.00	8,7	0.343	4370	982	1,41	0.95
			7200G D2K 750	7200GD2KKL/000	190,5	7.50	8,7	0.343	5450	1225	1,74	1.17
NEW ECOLOGICAL FRICTION ABATING THERMOPLASTIC e-F.A.S.T.			7200G EF 325	7200GEFKD/000	82,6	3.25	8,7	0.343	2300	517	0,80	0.54
			7200G EF 450	7200GEFKG/000	114,3	4.50	8,7	0.343	3290	740	1,08	0.72
			7200G EF 600	7200GEFKH/000	152,4	6.00	8,7	0.343	4370	982	1,41	0.95
			7200G EF 750	7200GEFKL/000	190,5	7.50	8,7	0.343	5450	1225	1,74	1.17

Standard packaging:
Rolls of 3,048 m (10 feet)

Copyright Regina Catene Calibrate s.p.a. - 2020, All rights reserved

8,7 mm (0.343") THICKNESS
FLUSH GRID

This belt has an excellent combination of open and support areas to allow drainage of liquids and good support of the conveyed product. This belt is particularly suitable for conveying of aluminium cans.

- **Belt widths:** 228,6 mm (9") or wider in 76,2 mm (3") increments
- **Working Load (at 25°C/77°F):** 30000 N/m (2,056 lbs/ft) for UP, DK2™ and e-F.A.S.T. materials
- **Belt weight:** 8,46 kg/m² (1.73 lbs/ft²) for UP, DK2™ and e-F.A.S.T. materials

DUPONT® KEVLAR® INSIDE

e-F.A.S.T. ECOLOGICAL FRICTION ABATING THERMO-PLASTIC

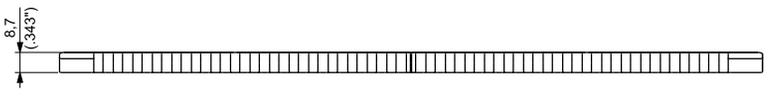

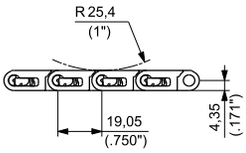

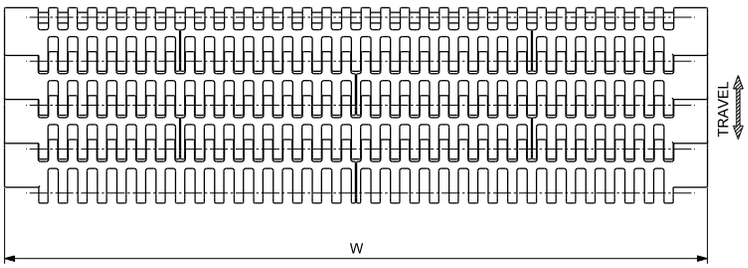

Materials see page 12
Sprockets see pages 220÷222
Applications see page 22

WIDTH W		MATERIALS			
		Module		NEW	Pin
		UP ULTRA PERFORMANCE HOMOPOLYMER DELRIN ®	DK2™ SPECIAL DELRIN ® REINFORCED WITH KEVLAR ®	e-F.A.S.T. ECOLOGICAL FRICTION ABATING THERMOPLASTIC	
mm	inch	PART NUMBER	PART NUMBER		
228,6	9	**7200UP009**	**7200D2K009**	**7200EF009**	PBT
304,8	12	**7200UP012**	**7200D2K012**	**7200EF012**	
381,0	15	**7200UP015**	**7200D2K015**	**7200EF015**	
457,2	18	**7200UP018**	**7200D2K018**	**7200EF018**	
533,4	21	**7200UP021**	**7200D2K021**	**7200EF021**	
609,6	24	**7200UP024**	**7200D2K024**	**7200EF024**	
685,8	27	**7200UP027**	**7200D2K027**	**7200EF027**	
762,0	30	**7200UP030**	**7200D2K030**	**7200EF030**	
838,2	33	**7200UP033**	**7200D2K033**	**7200EF033**	
914,4	36	**7200UP036**	**7200D2K036**	**7200EF036**	
990,6	39	**7200UP039**	**7200D2K039**	**7200EF039**	
1066,8	42	**7200UP042**	**7200D2K042**	**7200EF042**	
1143,0	45	**7200UP045**	**7200D2K045**	**7200EF045**	
1219,2	48	**7200UP048**	**7200D2K048**	**7200EF048**	
1295,4	51	**7200UP051**	**7200D2K051**	**7200EF051**	
1371,6	54	**7200UP054**	**7200D2K054**	**7200EF054**	
1447,8	57	**7200UP057**	**7200D2K057**	**7200EF057**	
1524,0	60	**7200UP060**	**7200D2K060**	**7200EF060**	

Belts wider than 1524 mm (60") are available in 76,2 mm (3") increments.
To identify the Part Numbers, please substitute the last three digits of the PN with the desired width.
Example: for a 63" wide belt (=60+3 inches) the PN for UP material is "7200UP063".
On request belts available in ½" (8,5 mm) increments, starting from 9" (228,6 mm).

Standard packaging:
Belts are supplied in the length requested by the customer.

Copyright Regina Catene Calibrate s.p.a. - 2020, All rights reserved

SUITABLE FOR CHAINS:
- **7200**
- **7300**

MATERIALS		
SPROCKETS:	PGF	REINFORCED POLYAMIDE
SCREW:	SS	STAINLESS STEEL
NUTS:	S+ZN	ZINC PLATED STEEL

24T & 25T SPROCKETS
(for 27T see next page)

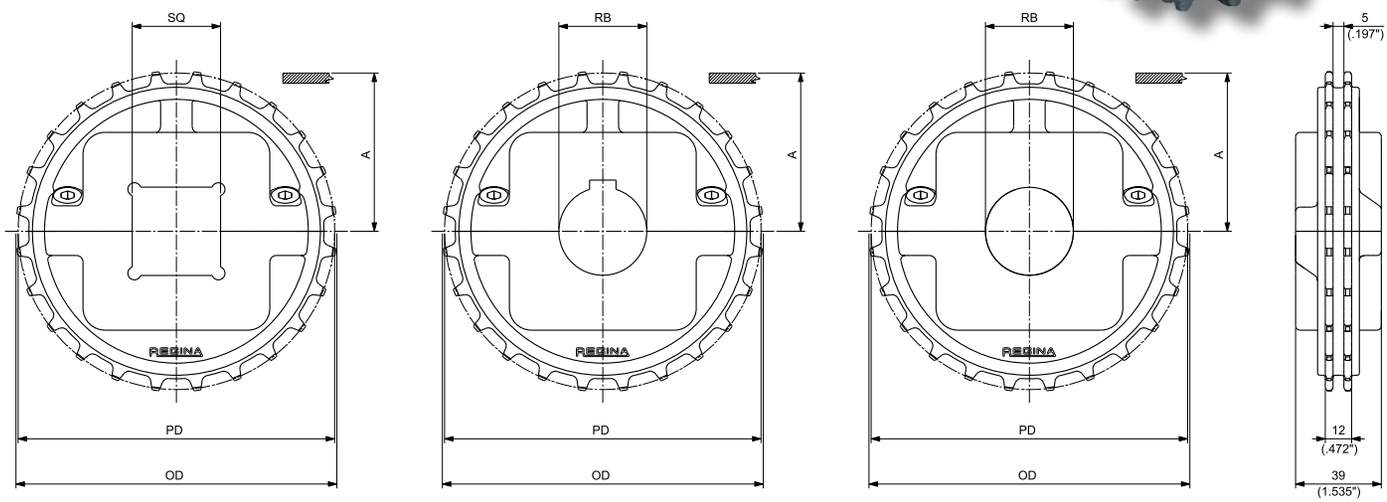

SQUARE BORE - DRIVE/IDLER | ROUND BORE - DRIVE | ROUND BORE - IDLER

MOULDED SPLIT DRIVE AND IDLER SPROCKETS

N. TEETH	PITCH DIAMETER PD		OUTSIDE DIAMETER OD		WEAR STRIP POSITIONING A		BORE SIZE*		PART NUMBER SQUARE BORE SQ	PART NUMBER ROUND BORE RB		WEIGHT	
	mm	inch	mm	inch	mm	inch	mm	inch**	DRIVE/IDLER	DRIVE	IDLER	Kg	lbs
24	145,95	5.746	146,00	5.748	68,60	2.701	30			**MPBST73002430**	**MPBSF73002430**	0,41	0.91
							35			**MPBST73002435**	**MPBSF73002435**	0,41	0.90
							40		**MPBSQ73002440**	**MPBST73002440**	**MPBSF73002440**	0,40	0.88
							45			**MPBST73002445**	**MPBSF73002445**	0,39	0.86
							50		**MPBSQ73002450**	**MPBST73002450**	**MPBSF73002450**	0,38	0.83
							60			**MPBST73002460**	**MPBSF73002460**	0,35	0.78
								1	**MPBSQ730024254**	**MPBST730024254**	**MPBSF730024254**	0,42	0.93
								1 3/16		**MPBST730024301**	**MPBSF730024301**	0,41	0.91
								1 1/4		**MPBST730024317**	**MPBSF730024317**	0,41	0.91
								1 7/16		**MPBST730024365**	**MPBSF730024365**	0,40	0.89
								1 1/2	**MPBSQ730024381**	**MPBST730024381**	**MPBSF730024381**	0,40	0.88
								2	**MPBSQ730024508**	**MPBST730024508**	**MPBSF730024508**	0,38	0.83
								2 1/2	**MPBSQ730024635**	**MPBST730024635**	**MPBSF730024635**	0,34	0.76
25	152,99	6.023	152,00	5.984	71,70	2.823	30			**MPBST73002530**	**MPBSF73002530**	0,43	0.94
							35			**MPBST73002535**	**MPBSF73002535**	0,42	0.93
							40		**MPBSQ73002540**	**MPBST73002540**	**MPBSF73002540**	0,41	0.91
							45			**MPBST73002545**	**MPBSF73002545**	0,40	0.89
							50		**MPBSQ73002550**	**MPBST73002550**	**MPBSF73002550**	0,39	0.86
							60			**MPBST73002560**	**MPBSF73002560**	0,37	0.81
								1	**MPBSQ730025254**	**MPBST730025254**	**MPBSF730025254**	0,43	0.96
								1 3/16		**MPBST730025301**	**MPBSF730025301**	0,43	0.94
								1 1/4		**MPBST730025317**	**MPBSF730025317**	0,43	0.94
								1 7/16		**MPBST730025365**	**MPBSF730025365**	0,42	0.92
								1 1/2	**MPBSQ730025381**	**MPBST730025381**	**MPBSF730025381**	0,42	0.92
								2	**MPBSQ730025508**	**MPBST730025508**	**MPBSF730025508**	0,39	0.86
								2 1/2	**MPBSQ730025635**	**MPBST730025635**	**MPBSF730025635**	0,36	0.79

*In case of round bore, diameter is indicated. In case of square bore, side of the square is indicated.
** Imperial round bore drive sprockets are supplied with setscrew. Metric round bore drive sprockets are supplied without setscrew.

Copyright Regina Catene Calibrate s.p.a. - 2020, All rights reserved

SUITABLE FOR CHAINS:
- **7200**
- **7300**

MATERIALS		
SPROCKETS:	PGF	REINFORCED POLYAMIDE
SCREW:	SS	STAINLESS STEEL
NUTS:	S+ZN	ZINC PLATED STEEL

27T SPROCKET
(for 24T & 25T see previous page)

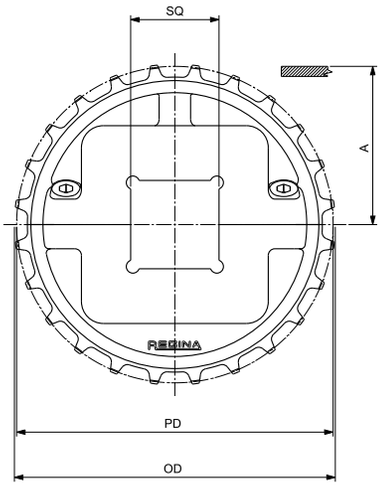

SQUARE BORE - DRIVE/IDLER

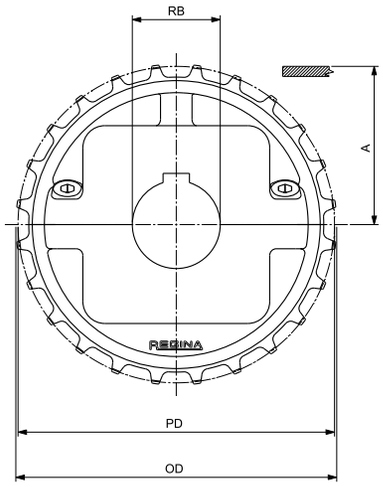

ROUND BORE - DRIVE

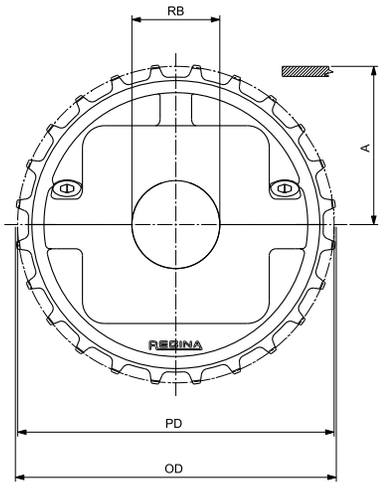

ROUND BORE - IDLER

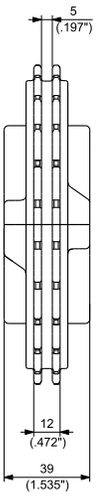

MOULDED SOLID IDLER WHEELS
SEE PAGE 123

MOULDED SPLIT IDLER WHEELS
SEE PAGE 186

MACHINED SPLIT IDLER WHEELS
SEE PAGE 125

MOULDED SPLIT DRIVE AND IDLER SPROCKETS

N. TEETH	PITCH DIAMETER PD		OUTSIDE DIAMETER OD		WEAR STRIP POSITIONING A		BORE SIZE*		PART NUMBER SQUARE BORE SQ	PART NUMBER ROUND BORE RB		WEIGHT	
	mm	inch	mm	inch	mm	inch	mm	inch**	DRIVE/IDLER	DRIVE	IDLER	Kg	lbs
							30			**MPBST73002730**	**MPBSF73002730**	0,46	1.01
							35			**MPBST73002735**	**MPBSF73002735**	0,45	0.99
							40		**MPBSQ73002740**	**MPBST73002740**	**MPBSF73002740**	0,44	0.97
							45			**MPBST73002745**	**MPBSF73002745**	0,43	0.95
							50		**MPBSQ73002750**	**MPBST73002750**	**MPBSF73002750**	0,42	0.93
27	164,09	6.460	164,20	6.465	77,70	3.059	60			**MPBST73002760**	**MPBSF73002760**	0,40	0.87
								1	**MPBSQ730027254**	**MPBST730027254**	**MPBSF730027254**	0,46	1.02
								1 3/16		**MPBST730027301**	**MPBSF730027301**	0,46	1.01
								1 1/4		**MPBST730027317**	**MPBSF730027317**	0,46	1.01
								1 7/16		**MPBST730027365**	**MPBSF730027365**	0,45	0.99
								1 1/2	**MPBSQ730027381**	**MPBST730027381**	**MPBSF730027381**	0,45	0.98
								2	**MPBSQ730027508**	**MPBST730027508**	**MPBSF730027508**	0,42	0.93
								2 1/2	**MPBSQ730027635**	**MPBST730027635**	**MPBSF730027635**	0,39	0.85

*In case of round bore, diameter is indicated. In case of square bore, side of the square is indicated.
** Imperial round bore drive sprockets are supplied with setscrew. Metric round bore drive sprockets are supplied without setscrew.

Copyright Regina Catene Calibrate s.p.a. - 2020, All rights reserved

SUITABLE FOR CHAINS:
- **7200**
- **7300**

MATERIALS		
SPROCKETS:	PA	POLYAMIDE
SCREWS:	SS	STAINLESS STEEL
NUTS:	B	BRASS

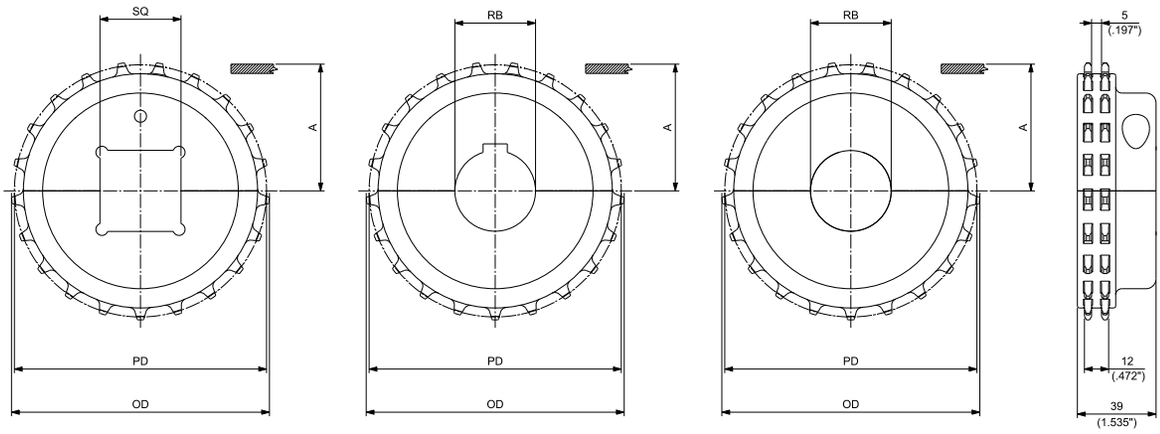

SQUARE BORE - DRIVE/IDLER | ROUND BORE - DRIVE | ROUND BORE - IDLER

MACHINED SPLIT DRIVE AND IDLER SPROCKETS

N. TEETH	PITCH DIAMETER PD		OUTSIDE DIAMETER OD		WEAR STRIP POSITIONING A		BORE SIZE*		PART NUMBER SQUARE BORE SQ DRIVE/IDLER	PART NUMBER ROUND BORE RB DRIVE	PART NUMBER ROUND BORE RB IDLER	WEIGHT	
	mm	inch	mm	inch	mm	inch	mm	inch**				Kg	lbs
							25			**MPBAST73001725**	**MPBASF73001725**	0,25	0.54
							30			**MPBAST73001730**	**MPBASF73001730**	0,24	0.52
							35			**MPBAST73001735**	**MPBASF73001735**	0,23	0.50
17	103,67	4.081	103,60	4.079	47,50	1.870	40		**MPBASQ73001740**	**MPBAST73001740**	**MPBASF73001740**	0,21	0.47
								1	**MPBASQ730017254**	**MPBAST730017254**	**MPBASF730017254**	0,25	0.54
								1 3/16		**MPBAST730017301**	**MPBASF730017301**	0,24	0.52
								1 1/4		**MPBAST730017317**	**MPBASF730017317**	0,23	0.52
								1 3/8		**MPBAST730017349**	**MPBASF730017349**	0,23	0.50
								1 7/16		**MPBAST730017365**	**MPBASF730017365**	0,22	0.49
								1 1/2	**MPBSQ730017381**	**MPBAST730017381**	**MPBASF730017381**	0,22	0.48
							25			**MPBAST73002125**	**MPBASF73002125**	0,42	0.92
							30			**MPBAST73002130**	**MPBASF73002130**	0,41	0.90
							35			**MPBAST73002135**	**MPBASF73002135**	0,40	0.88
							40		**MPBASQ73002140**	**MPBAST73002140**	**MPBASF73002140**	0,39	0.85
							45			**MPBAST73002145**	**MPBASF73002145**	0,37	0.82
							50		**MPBASQ73002150**	**MPBAST73002150**	**MPBASF73002150**	0,35	0.78
21	127,82	5.032	127,90	5.035	59,60	2.346	60			**MPBAST73002160**	**MPBASF73002160**	0,32	0.69
								1	**MPBASQ730021254**	**MPBAST730021254**	**MPBASF730021254**	0,42	0.92
								1 3/16		**MPBAST730021301**	**MPBASF730021301**	0,41	0.90
								1 1/4		**MPBAST730021317**	**MPBASF730021317**	0,41	0.90
								1 3/8		**MPBAST730021349**	**MPBASF730021349**	0,40	0.88
								1 7/16		**MPBAST730021365**	**MPBASF730021365**	0,39	0.87
								1 1/2	**MPBASQ730021381**	**MPBAST730021381**	**MPBASF730021381**	0,39	0.86
								2	**MPBASQ730021508**	**MPBAST730021508**	**MPBASF730021508**	0,35	0.77

*In case of round bore, diameter is indicated. In case of square bore, side of the square is indicated.
** Imperial round bore drive sprockets are supplied with setscrew. Metric round bore drive sprockets are supplied without setscrew.

Copyright Regina Catene Calibrate s.p.a. - 2020, All rights reserved

REGINA CHAIN

PERFORMANCE IN MOTION

Matveyor®

1″ Pitch Heavy Duty Belts and Chains

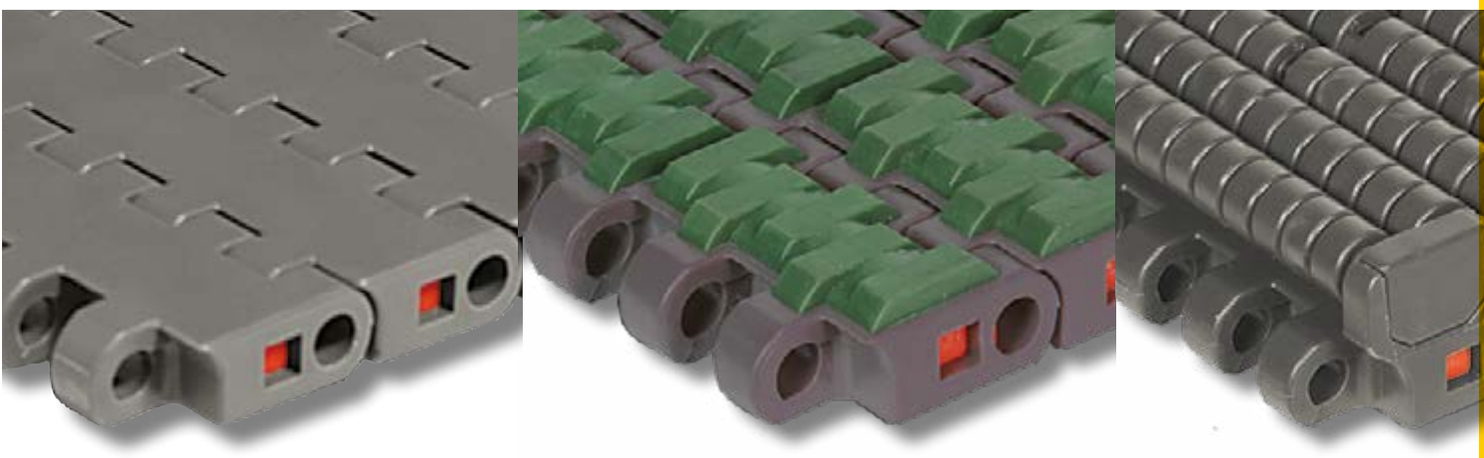

INDUSTRIES AND APPLICATIONS

Suitable for handling loose and packaged products, such as glass bottles, aluminium & steel cans, in heavy duty applications

INDUSTRIES

Bottling and canning

Container manufacturing
(in particular glass bottles)

Paper/cardboard

APPLICATIONS

Depalletizer

Pressureless Inliners and Combiners

Single lane & mass conveyors

Accumulation tables

Case conveyors

Palletizers

FEATURES

- Strong hinge design ensure high mechanical strength for the most demanding applications.
- Round design edge and no gap between hinges allow a superior product handling in linear and side transfer of the products.
- Large and close bottom sliding surface with strong edges allow:
  - Higher belt wear resistance thanks to the less specific pressure between belt and wear strips
  - Maximum resistance against broken debris present on the line
- The belts can be used on conveyors side by side with Magnetic or TAB sideflexing chains 793 series allowing a smooth products transfer between straight running and sideflexing conveyors.
- Availability of LBP version (LBP USPM and LBP XSPM series), equipped with superior rotation capability rollers, to safely handle packaged products in long center to center accumulation conveyors.
- Rubberized belts available (HF USPM series) displaying maximum and inform rubberized area allowing outstanding gripping capacity on the conveyed products.

Copyright Regina Catene Calibrate s.p.a. - 2020, All rights reserved

12,7 mm (0.5") THICKNESS
SOLID TOP

The extremely good flatness, manufacturing accuracy and low coefficient of friction make the side transfer of the products very easy.
Completely closed surface, no gap between the modules, even when engaging on the sprockets. Particulary suitable for glass products, small sized products and unstable containers (for example PET bottles with petaloid base)

DUPONT® KEVLAR® INSIDE

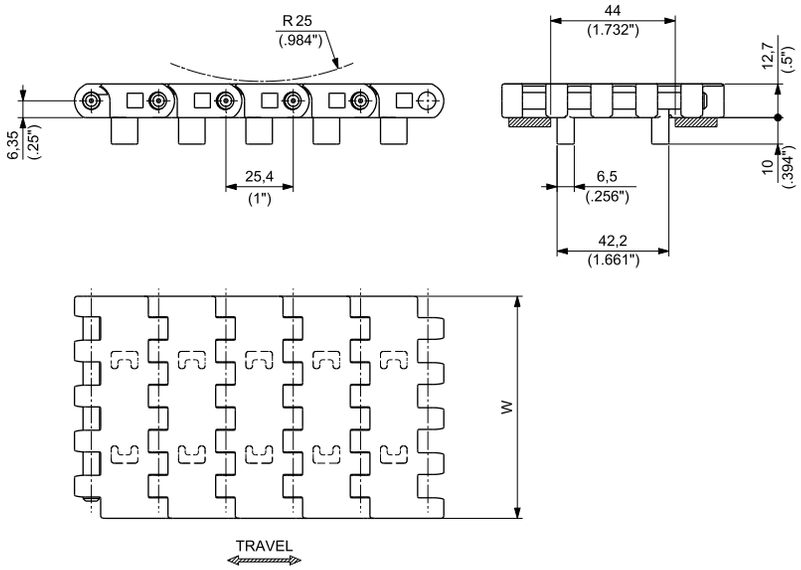

Materials see page 12
Sprockets see pages 241÷243
Applications see page 22

MATERIALS Plate	MATERIALS Pin	ITEM DESCRIPTION	PART NUMBER	WIDTH W mm	WIDTH W inch	PLATE THICKNESS mm	PLATE THICKNESS inch	WORKING LOAD (25°C/77°F) N	WORKING LOAD (25°C/77°F) lbs	WEIGHT kg/m	WEIGHT lbs/ft
ULTRA PERFORMANCE HOMOPOLYMER DELRIN ® UP	PBT	USPMG UP K 83,8	USPMGUPKRA/000	83,8	3.30	12,7	0.50	2975	670	1,24	0.83
SPECIAL DELRIN ® REINFORCED WITH KEVLAR ® DK2™	PBT	USPMG D2K K 83,8	USPMGD2KRA/000	83,8	3.30	12,7	0.50	2975	670	1,24	0.68
ABRASION RESISTANT POLYAMIDE[1] AR	PBT	USPMG AR K 83,8	USPMGARKRA/000	83,8	3.30	12,7	0.50	2975	670	1,19	0.80

[1] ACTUAL WIDTH CAN BE UP TO 0,5% GREATER THAN NOMINAL WIDTH

Standard packaging: Rolls of 3,048 m (10 feet)

Copyright Regina Catene Calibrate s.p.a. - 2020, All rights reserved

12,7 mm (0.5") THICKNESS
SOLID TOP

Extremely good flatness, manufacturing accuracy and low coefficient of friction make the side transfer of the products very easy.
Completely closed surface, no gap between the modules, even when engaging on the sprockets. Particulary suitable for glass products, small sized products and unstable containers (for example PET bottles with petaloid base)

- **Belt widths:** 85 mm (3.34") or wider in 85 mm (3.34") increments
- **Working Load (at 25°C/77°F):** 35000 N/m (2400 lbs/ft) for UP, DK2™ and AR materials
- **Belt weight:** 14,11 kg/m² (2.89 lbs/ft²) for UP and DK2™ materials
  13,59 kg/m² (2.78 lbs/ft²) for AR material

DUPONT® KEVLAR® INSIDE

VERSION WITHOUT TRACKING GUIDE

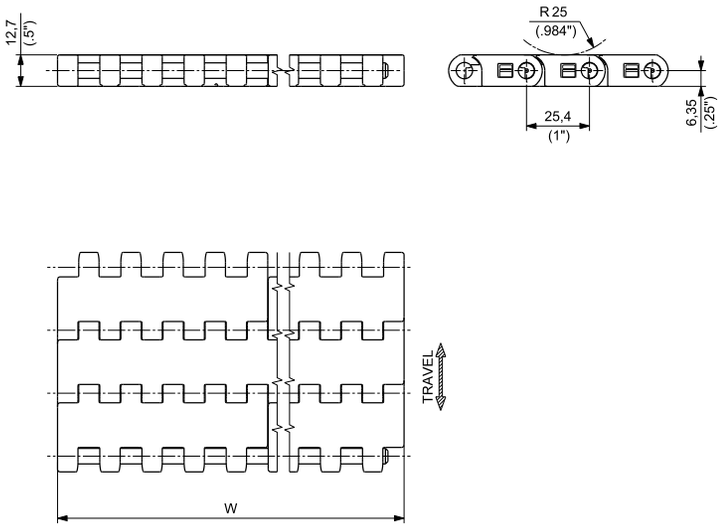

VERSION WITH TRACKING GUIDE

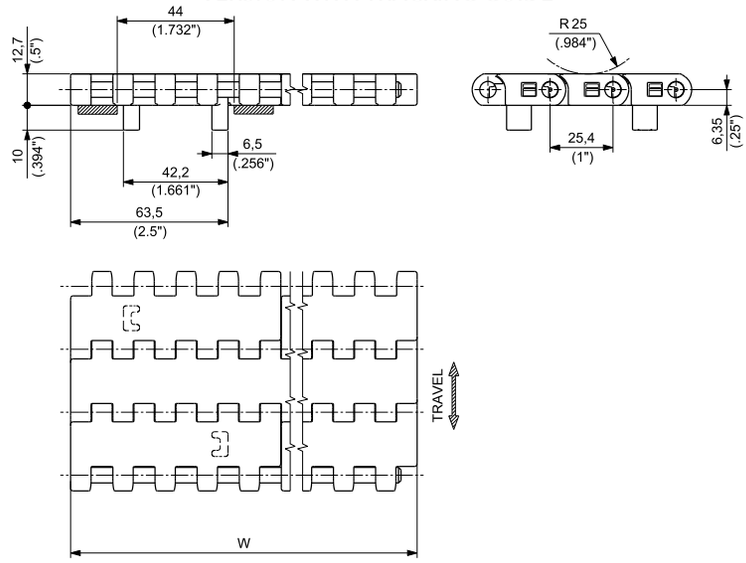

NOTE: The belt is also available with single tracking guide at both belt sides. Please contact REGINA customer service for further information.

Materials see page 12
Sprockets see pages 241÷243
Applications see page 22

WIDTH W		MATERIALS						
		Module						Pin
		UP ULTRA PERFORMANCE HOMOPOLYMER DELRIN ®		DK2™ SPECIAL DELRIN ® REINFORCED WITH KEVLAR ®		AR ABRASION RESISTANT POLYAMIDE[1]		
		PART NUMBER		PART NUMBER		PART NUMBER		
mm	inch	WITHOUT TRACKING GUIDE	WITH TRACKING GUIDE	WITHOUT TRACKING GUIDE	WITH TRACKING GUIDE	WITHOUT TRACKING GUIDE	WITH TRACKING GUIDE	
85	3.34	**USPMUP0085**	**USPMGUP0085**	**USPMD2K0085**	**USPMGD2K0085**	**USPMAR0085**	**USPMGAR0085**	PBT
170	6.69	**USPMUP0170**	**USPMG1UP0170**	**USPMD2K0170**	**USPMG1D2K0170**	**USPMAR0170**	**USPMG1AR0170**	
255	10.04	**USPMUP0255**	**USPMG1UP0255**	**USPMD2K0255**	**USPMG1D2K0255**	**USPMAR0255**	**USPMG1AR0255**	
340	13.39	**USPMUP0340**	**USPMG1UP0340**	**USPMD2K0340**	**USPMG1D2K0340**	**USPMAR0340**	**USPMG1AR0340**	
425	16.73	**USPMUP0425**	**USPMG1UP0425**	**USPMD2K0425**	**USPMG1D2K0425**	**USPMAR0425**	**USPMG1AR0425**	
510	20.08	**USPMUP0510**	**USPMG1UP0510**	**USPMD2K0510**	**USPMG1D2K0510**	**USPMAR0510**	**USPMG1AR0510**	
595	23.43	**USPMUP0595**	**USPMG1UP0595**	**USPMD2K0595**	**USPMG1D2K0595**	**USPMAR0595**	**USPMG1AR0595**	
680	26.77	**USPMUP0680**	**USPMG1UP0680**	**USPMD2K0680**	**USPMG1D2K0680**	**USPMAR0680**	**USPMG1AR0680**	
765	30.12	**USPMUP0765**	**USPMG1UP0765**	**USPMD2K0765**	**USPMG1D2K0765**	**USPMAR0765**	**USPMG1AR0765**	
850	33.46	**USPMUP0850**	**USPMG1UP0850**	**USPMD2K0850**	**USPMG1D2K0850**	**USPMAR0850**	**USPMG1AR0850**	
935	36.81	**USPMUP0935**	**USPMG1UP0935**	**USPMD2K0935**	**USPMG1D2K0935**	**USPMAR0935**	**USPMG1AR0935**	
1020	40.16	**USPMUP1020**	**USPMG1UP1020**	**USPMD2K1020**	**USPMG1D2K1020**	**USPMAR1020**	**USPMG1AR1020**	

[1] ACTUAL WIDTH CAN BE UP TO 1% GREATER THAN NOMINAL WIDTH

Belts wider than 1020 mm (40.16") are available in 85 mm (3.35") increments.
To identify the Part Numbers, please substitute the last four digits of the PN with the desired width.
Example: for a 1105 mm wide belt (=1020+85 mm) without guide, the PN for UP material is "USPMUP1105".

Standard packaging:
Belt widths ≤ 680 mm (26.77") are supplied in rolls of 3,048 m (10 ft) each.
Belt widths ≥ 765 mm (30.12") are supplied in the length requested by the customer.

Copyright Regina Catene Calibrate s.p.a. - 2020, All rights reserved

ACTIVE TRANSFER MODULES
12,7 mm (0.5") THICKNESS
SOLID TOP

Extremely good flatness, manufacturing accuracy and low coefficient of friction make the side transfer of the products very easy. Completely closed surface, no gap between the modules, even when engaging on the sprockets. Particularly suitable for glass products, small sized products and unstable containers (for example PET bottles with petaloid base)

DUPONT® KEVLAR® INSIDE

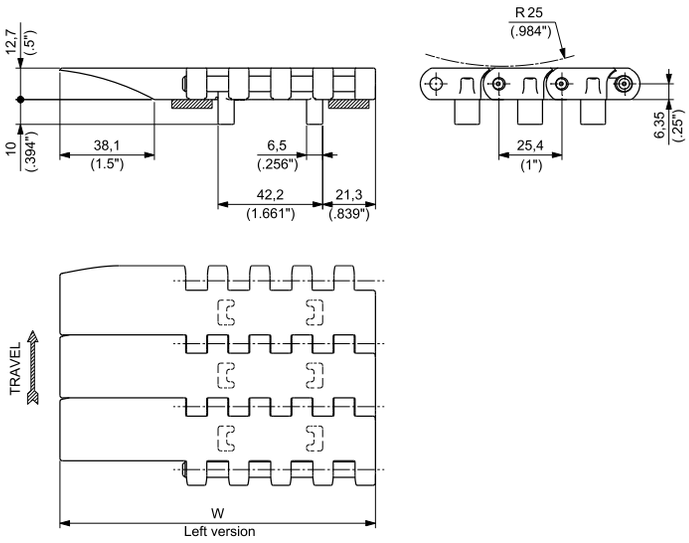

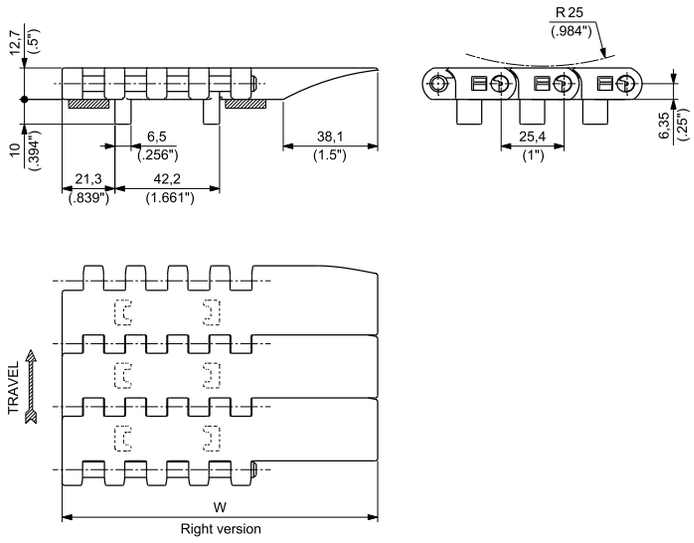

Materials see page 12
Sprockets see pages 241÷243
Applications see page 22

USPMG ATM - Left Version

MATERIALS Plate	MATERIALS Pin	ITEM DESCRIPTION	PART NUMBER	WIDTH W mm	WIDTH W inch	PLATE THICKNESS mm	PLATE THICKNESS inch	WORKING LOAD (25°C/77°F) N	WORKING LOAD (25°C/77°F) lbs	WEIGHT kg/m	WEIGHT lbs/ft
ULTRA PERFORMANCE HOMOPOLYMER DELRIN ® UP	PBT	USPMGATM UP 0085 SX	USPMGATMUP085S	127,5	5.02	12,7	0.5	2975	669	1,55	1.04
SPECIAL DELRIN ® REINFORCED WITH KEVLAR ® DK2™	PBT	USPMGATM D2K 0085 SX	USPMGATMD2K085S	127,5	5.02	12,7	0.5	2975	669	1,55	1.04
ABRASION RESISTANT POLYAMIDE (1) AR	PBT	USPMGATM AR 0085 SX	USPMGATMAR085S	127,5	5.02	12,7	0.5	2975	669	1,50	1.01

USPMG ATM - Right Version

MATERIALS Plate	MATERIALS Pin	ITEM DESCRIPTION	PART NUMBER	WIDTH W mm	WIDTH W inch	PLATE THICKNESS mm	PLATE THICKNESS inch	WORKING LOAD (25°C/77°F) N	WORKING LOAD (25°C/77°F) lbs	WEIGHT kg/m	WEIGHT lbs/ft
ULTRA PERFORMANCE HOMOPOLYMER DELRIN ® UP	PBT	USPMGATM UP 0085 DX	USPMGATMUP085D	127,5	5.02	12,7	0.5	2975	669	1,55	1.04
SPECIAL DELRIN ® REINFORCED WITH KEVLAR ® DK2™	PBT	USPMGATM D2K 0085 DX	USPMGATMD2K085D	127,5	5.02	12,7	0.5	2975	669	1,55	1.04
ABRASION RESISTANT POLYAMIDE (1) AR	PBT	USPMGATM AR 0085 DX	USPMGATMAR085D	127,5	5.02	12,7	0.5	2975	669	1,50	1.01

(1) ACTUAL WIDTH CAN BE UP TO 0,5% GREATER THAN NOMINAL WIDTH

Standard packaging: Rolls of 3,048 m (10 feet)

Copyright Regina Catene Calibrate s.p.a. - 2020, All rights reserved

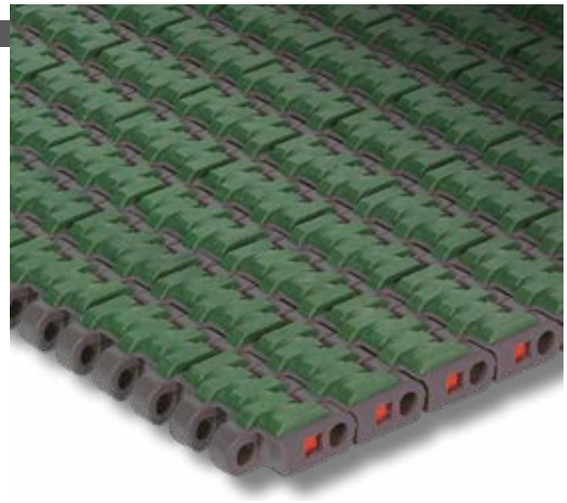

12,7 mm (0.5") THICKNESS
RUBBERIZED SURFACE - FULL COVER

HF USPM belts are an ideal solution for heavy duty inclines, declines and package handling (acceleration, deceleration and rotation).

- **Belt widths:** 85 mm (3.346") or wider in 85 mm (3.346") increments
- **Working Load (at 25°C/77°F):** 35000 N/m (2,400 lbs/ft) for ULF material
  18100 N/m (1,240 lbs/ft) for PP material
- **Belt weight:** 14,84 kg/m² (3.04 lbs/ft²) for ULF material
  10,38 kg/m² (2.13 lbs/ft²) for PP material

VERSION WITHOUT TRACKING GUIDE

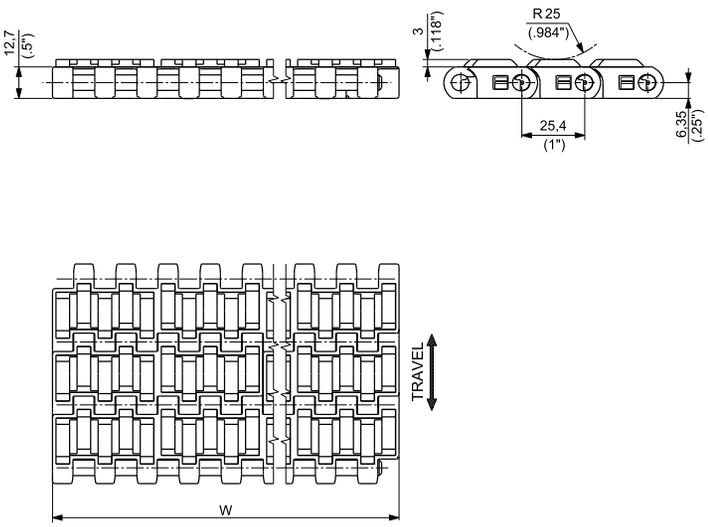

VERSION WITH TRACKING GUIDE

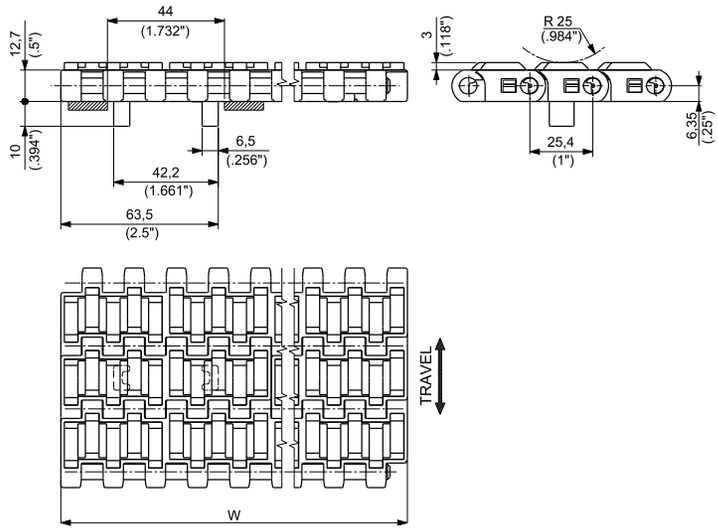

Materials see page 12
Sprockets see pages 241÷243
Applications see page 22

WIDTH W		MATERIALS					
		Module				Rubber	Pin
		ULF ULTRA LOW FRICTION POLYESTER RESIN		PP SPECIAL POLIPROPYLENE[1]			
		PART NUMBER		PART NUMBER			
mm	inche	WITHOUT TRACKING GUIDE	WITH TRACKING GUIDE	WITHOUT TRACKING GUIDE	WITH TRACKING GUIDE		
85	3.35	**HFUMULF0085**	**HFUMGULF0085**	**HFUMPP0085**	**HFUMGPP0085**	THERMOPLASTIC TPE Hardness: 55 ShA for ULF material 50 ShA for PP material	POM for ULF material PBT for PP material
170	6.69	**HFUMULF0170**	**HFUMG1ULF0170**	**HFUMPP0170**	**HFUMG1PP0170**		
255	10.04	**HFUMULF0255**	**HFUMG1ULF0255**	**HFUMPP0255**	**HFUMG1PP0255**		
340	13.39	**HFUMULF0340**	**HFUMG1ULF0340**	**HFUMPP0340**	**HFUMG1PP0340**		
425	16.73	**HFUMULF0425**	**HFUMG1ULF0425**	**HFUMPP0425**	**HFUMG1PP0425**		
510	20.08	**HFUMULF0510**	**HFUMG1ULF0510**	**HFUMPP0510**	**HFUMG1PP0510**		
595	23.43	**HFUMULF0595**	**HFUMG1ULF0595**	**HFUMPP0595**	**HFUMG1PP0595**		
680	26.77	**HFUMULF0680**	**HFUMG1ULF0680**	**HFUMPP0680**	**HFUMG1PP0680**		
765	30.12	**HFUMULF0765**	**HFUMG1ULF0765**	**HFUMPP0765**	**HFUMG1PP0765**		
850	33.46	**HFUMULF0850**	**HFUMG1ULF0850**	**HFUMPP0850**	**HFUMG1PP0850**		
935	36,81	**HFUMULF0935**	**HFUMG1ULF0935**	**HFUMPP0935**	**HFUMG1PP0935**		
1020	40,16	**HFUMULF1020**	**HFUMG1ULF1020**	**HFUMPP1020**	**HFUMG1PP1020**		

[1] ACTUAL WIDTH CAN BE UP TO 1% GREATER THAN NOMINAL WIDTH

Belts wider than 1020 mm (40.16") are available in 85 mm (3.35") increments.
To identify the Part Numbers, please substitute the last four digits of the PN with the desired width.
Example: for a 1105 mm wide belt (=1020+85 mm) without guide, the PN for ULF material is "HFUMULF1105".

Standard packaging:
Belt widths ≤ 425 mm (16.73") are supplied in rolls of 1,524 m (5 ft) each.
Belt widths ≥ 510 mm (20.08") are supplied in the length requested by the customer.

Copyright Regina Catene Calibrate s.p.a. - 2020, All rights reserved

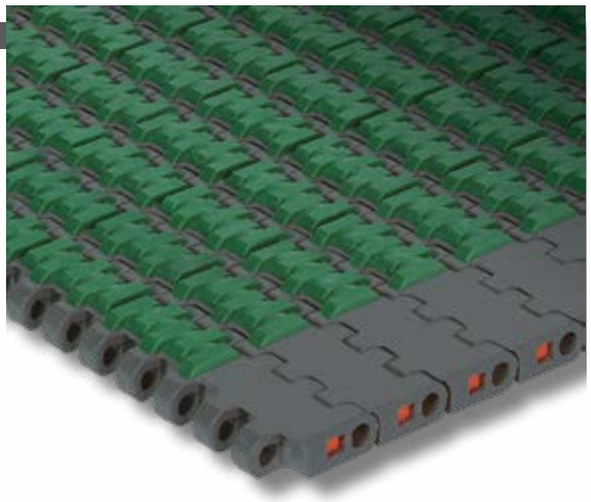

12,7 mm (0.5") THICKNESS
RUBBERIZED SURFACE - SIDE INDENT

HFS USPM belts are an ideal solution for heavy duty inclines, declines and package handling (acceleration, deceleration and rotation).

- **Belt widths:** 255 mm (10.04") or wider in 85 mm (10.04") increments
- **Working Load (at 25°C/77°F):** 35000 N/m (2,400 lbs/ft) for ULF material
  18100 N/m (1,240 lbs/ft) for PP material
- **Belt weight:** 14,71 kg/m² (3.01 lbs/ft²) for ULF material
  10,38 kg/m² (2.13 lbs/ft²) for PP material

VERSION WITHOUT TRACKING GUIDE

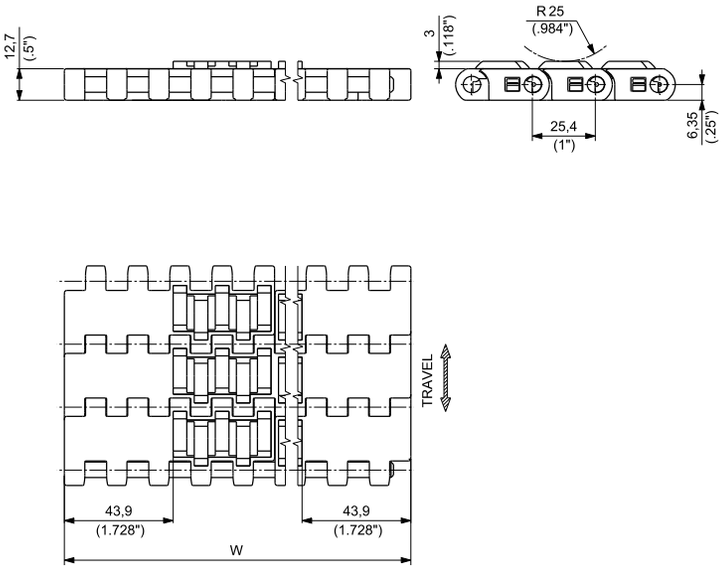

VERSION WITH TRACKING GUIDE

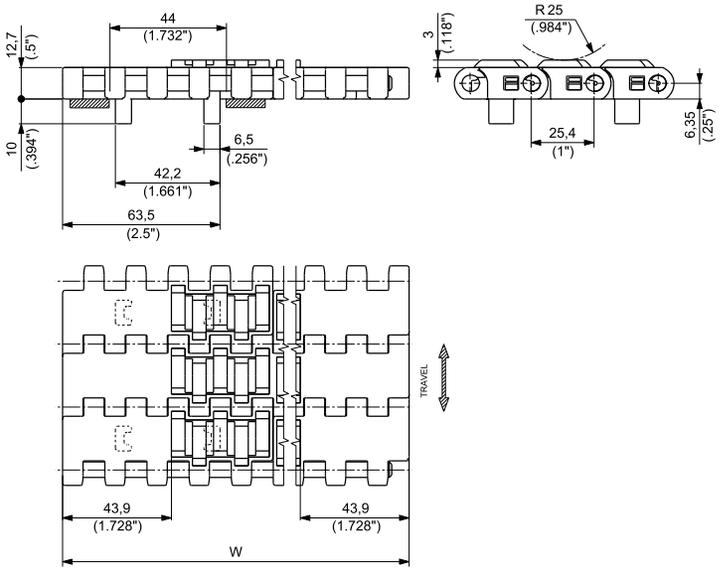

Materials see page 12
Sprockets see pages 241÷243
Applications see page 22

WIDTH W		MATERIALS					
		Module				Rubber	Pin
		ULF ULTRA LOW FRICTION POLYESTER RESIN		PP SPECIAL POLIPROPYLENE[1]			
		PART NUMBER		PART NUMBER			
mm	inches	WITHOUT TRACKING GUIDE	WITH TRACKING GUIDE	WITHOUT TRACKING GUIDE	WITH TRACKING GUIDE		
255	10.04	**HFSUMULF0255**	**HFSUMG1ULF0255**	**HFSUMPP0255**	**HFSUMG1PP0255**	THERMOPLASTIC TPE Hardness: 55 ShA for ULF material 50 ShA for PP material	POM for ULF material PBT for PP material
340	13.39	**HFSUMULF0340**	**HFSUMG1ULF0340**	**HFSUMPP0340**	**HFSUMG1PP0340**		
425	16.73	**HFSUMULF0425**	**HFSUMG1ULF0425**	**HFSUMPP0425**	**HFSUMG1PP0425**		
510	20.08	**HFSUMULF0510**	**HFSUMG1ULF0510**	**HFSUMPP0510**	**HFSUMG1PP0510**		
595	23.43	**HFSUMULF0595**	**HFSUMG1ULF0595**	**HFSUMPP0595**	**HFSUMG1PP0595**		
680	26.77	**HFSUMULF0680**	**HFSUMG1ULF0680**	**HFSUMPP0680**	**HFSUMG1PP0680**		
765	30.12	**HFSUMULF0765**	**HFSUMG1ULF0765**	**HFSUMPP0765**	**HFSUMG1PP0765**		
850	33.46	**HFSUMULF0850**	**HFSUMG1ULF0850**	**HFSUMPP0850**	**HFSUMG1PP0850**		
935	36.81	**HFSUMULF0935**	**HFSUMG1ULF0935**	**HFSUMPP0935**	**HFSUMG1PP0935**		
1020	40.16	**HFSUMULF1020**	**HFSUMG1ULF1020**	**HFSUMPP1020**	**HFSUMG1PP1020**		

[1] ACTUAL WIDTH CAN BE UP TO 1% GREATER THAN NOMINAL WIDTH

Belts wider than 1020 mm (40.16") are available in 85 mm (3.35") increments.
To identify the Part Numbers, please substitute the last four digits of the PN with the desired width.
Example: for a 1105 mm wide belt (=1020+85 mm) without guide, the PN for ULF material is "HFSUMULF1105".

Standard packaging:
Belt widths ≤ 425 mm (16.73") are supplied in rolls of 1,524 m (5 ft) each.
Belt widths ≥ 510 mm (20.08") are supplied in the length requested by the customer.

Copyright Regina Catene Calibrate s.p.a. - 2020, All rights reserved

12,7 mm (0.5") THICKNESS
LBP ROLLERS

Suitable for applications where a conveyor with a large accumulating section is neededed.

- **Belt widths:** 85 mm (3.346") or wider in 85 mm (3.346") increments
- **Working Load (at 25°C/77°F):** 35000 N/m (2400 lbs/ft)
- **Belt weight:** 31,11 kg/m² (6.37 lbs/ft²)

VERSION WITHOUT TRACKING GUIDE

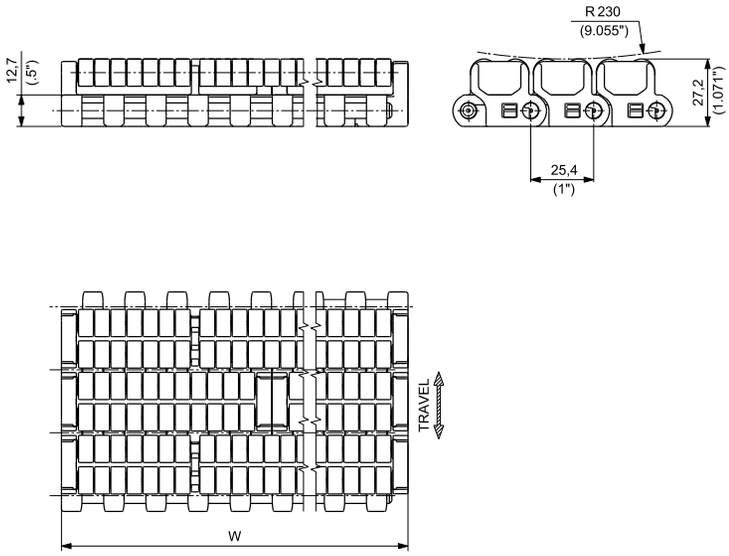

VERSION WITH TRACKING GUIDE

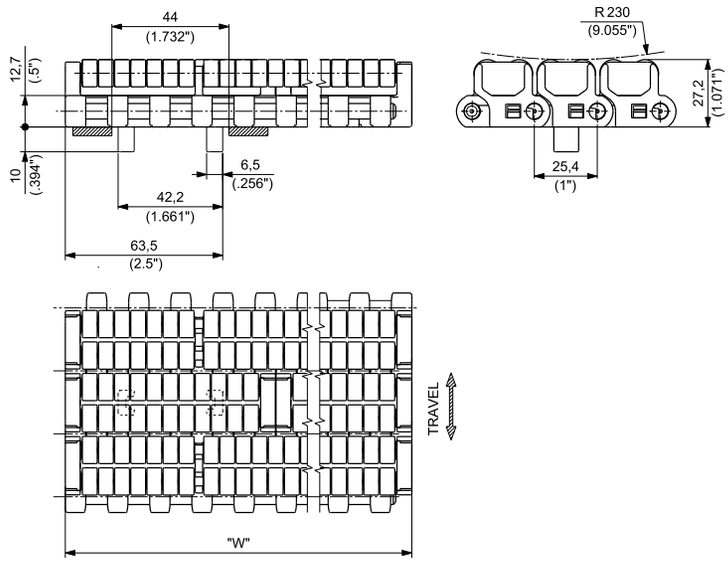

Materials see page 12
Sprockets see pages 241÷243
Applications see page 22

WIDTH W		MATERIALS		
		Module and roller		Pin
		UP ULTRA PERFORMANCE HOMOPOLYMER DELRIN ®		
		PART NUMBER		
mm	inch	WITHOUT TRACKING GUIDE	WITH TRACKING GUIDE	
85	3.35	**LBPUSPMUP0085**	**LBPUSPMGUP0085**	PBT
170	6.69	**LBPUSPMUP0170**	**LBPUSPMG1UP0170**	
255	10.04	**LBPUSPMUP0255**	**LBPUSPMG1UP0255**	
340	13.39	**LBPUSPMUP0340**	**LBPUSPMG1UP0340**	
425	16.73	**LBPUSPMUP0425**	**LBPUSPMG1UP0425**	
510	20.08	**LBPUSPMUP0510**	**LBPUSPMG1UP0510**	
595	23.43	**LBPUSPMUP0595**	**LBPUSPMG1UP0595**	
680	26.77	**LBPUSPMUP0680**	**LBPUSPMG1UP0680**	
765	30.12	**LBPUSPMUP0765**	**LBPUSPMG1UP0765**	
850	33.46	**LBPUSPMUP0850**	**LBPUSPMG1UP0850**	
935	36.81	**LBPUSPMUP0935**	**LBPUSPMG1UP0935**	
1020	40.16	**LBPUSPMUP1020**	**LBPUSPMG1UP1020**	

Belts wider than 1020 mm (40.16") are available in 85 mm (3.35") increments.
To identify the Part Numbers, please substitute the last four digits of the PN with the desired width.
Example: for a 1105 mm wide belt (=1020+85 mm) without guide, the PN for UP material is "LBPUSPMUP1105".

Standard packaging:
Belt widths ≤ 425 mm (16.73") are supplied in rolls of 1,524 m (5 ft) each.
Belt widths ≥ 510 mm (20.09") and ≤ 935 (36.81") are supplied in rolls of 1,016 m (3.33 ft) each.
Belt widths ≥ 1020 mm (40.16") are supplied in the lenght requested by the customer.

Copyright Regina Catene Calibrate s.p.a. - 2020, All rights reserved

11 mm (0.433") THICKNESS
LBP ROLLERS
SAFETY DESIGN

NEW

Designed for product accumulation applications where a combination of high performance, improved safety and energy saving are required. LBP rollers allow for pressure reduction among accumulated products and for belt pull reduction.

- **Belt widths:** 85 mm (3.346") or wider in 85 mm (3.346") increments
- **Working Load (at 25°C/77°F):** 34000 N/m (2,330 lbs/ft)
- **Belt weight:** 19,40 kg/m² (3.97 lbs/ft²)

VERSION WITHOUT TRACKING GUIDE

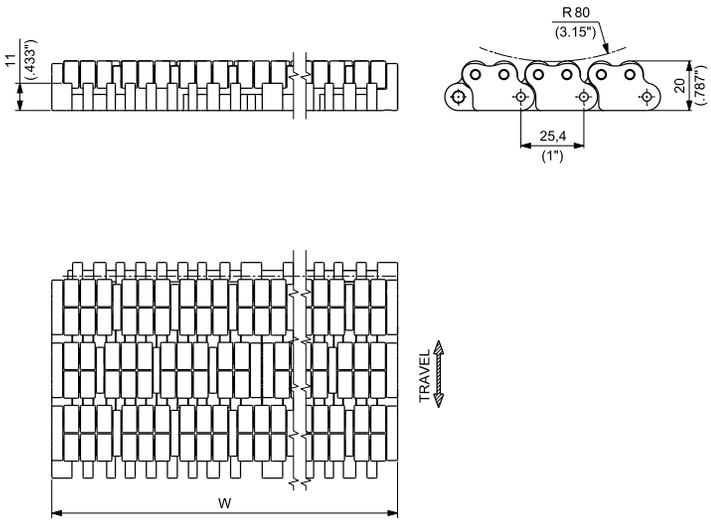

VERSION WITH TRACKING GUIDE

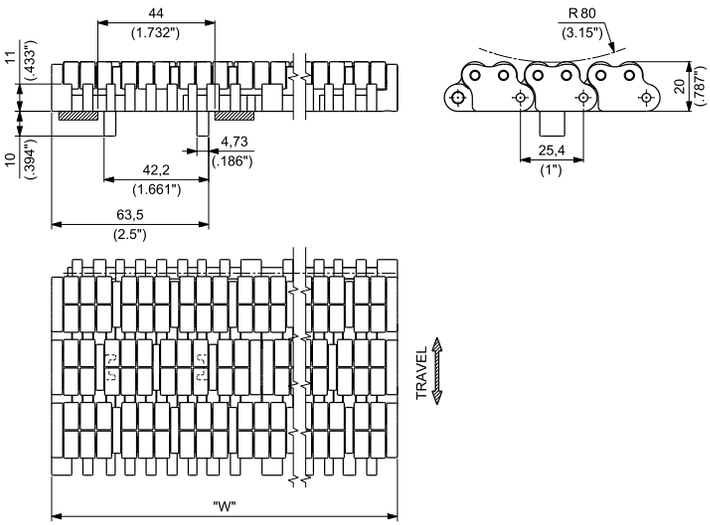

Materials see page 12
Sprockets see pages 241÷243
Applications see page 22

WIDTH W		MATERIALS		
		Module and roller		Pin
		UP ULTRA PERFORMANCE HOMOPOLYMER DELRIN ®		
		PART NUMBER		
mm	inch	WITHOUT TRACKING GUIDE	WITH TRACKING GUIDE	
85	3.35	**LBPXSPMUP0085**	**LBPXSPMGUP0085**	PBT
170	6.69	**LBPXSPMUP0170**	**LBPXSPMG1UP0170**	
255	10.04	**LBPXSPMUP0255**	**LBPXSPMG1UP0255**	
340	13.39	**LBPXSPMUP0340**	**LBPXSPMG1UP0340**	
425	16.73	**LBPXSPMUP0425**	**LBPXSPMG1UP0425**	
510	20.08	**LBPXSPMUP0510**	**LBPXSPMG1UP0510**	
595	23.43	**LBPXSPMUP0595**	**LBPXSPMG1UP0595**	
680	26.77	**LBPXSPMUP0680**	**LBPXSPMG1UP0680**	
765	30.12	**LBPXSPMUP0765**	**LBPXSPMG1UP0765**	
850	33.46	**LBPXSPMUP0850**	**LBPXSPMG1UP0850**	
935	36.81	**LBPXSPMUP0935**	**LBPXSPMG1UP0935**	
1020	40.16	**LBPXSPMUP1020**	**LBPXSPMG1UP1020**	

Belts wider than 1020 mm (40.16") are available in 85 mm (3.35") increments.
To identify the Part Numbers, please substitute the last four digits of the PN with the desired width.
Example: for a 1105 mm wide belt (=1020+85 mm) without guide, the PN is "LBPXSPMUP1105".

Standard packaging:
Belt widths ≤ 425 mm (16.73") are supplied in rolls of 1,524 m (5 ft) each.
Belt widths ≥ 510 mm (20.09") and ≤ 935 (36.81") are supplied in rolls of 1,016 m (3.33 ft) each.
Belt widths ≥ 1020 mm (40.16") are supplied in the lenght requested by the customer.

Copyright Regina Catene Calibrate s.p.a. - 2020, All rights reserved

12,7 mm (0.5") THICKNESS
SOLID TOP

Completely closed surface, no gap between modules, even when engaging on the sprockets. Particularly suitable for glass products.

DUPONT® KEVLAR® INSIDE

VERSION WITHOUT TRACKING GUIDE

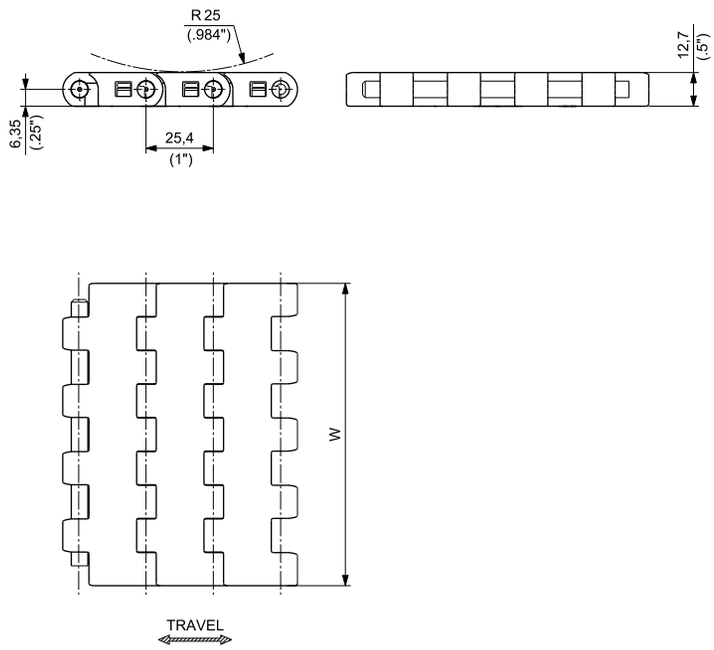

VERSION WITH TRACKING GUIDE

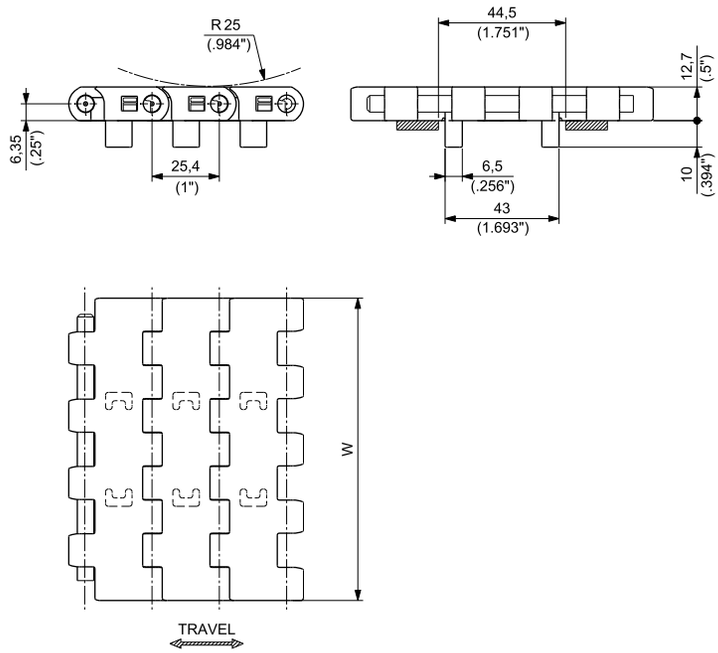

Materials see page 12
Sprockets see pages 241÷243
Applications see page 22

MATERIALS Plate	MATERIALS Pin	VERSION	ITEM DESCRIPTION	PART NUMBER	WIDTH W mm	WIDTH W inch	PLATE THICKNESS mm	PLATE THICKNESS inch	WORKING LOAD (25°C/77°F) N	WORKING LOAD (25°C/77°F) lbs	WEIGHT kg/m	WEIGHT lbs/ft
ULTRA PERFORMANCE HOMOPOLYMER DELRIN ® UP	PBT	WITHOUT TRACKING GUIDE	USP UP 325	USPUPKD/000	82,6	3.25	12,7	0.50	2500	562	1,27	0.86
			USP UP 450	USPUPKG/000	114,3	4.50	12,7	0.50	3430	771	1,73	1.16
			USP UP 750	USPUPKL/000	190,5	7.50	12,7	0.50	5710	1284	2,83	1.90
SPECIAL DELRIN ® REINFORCED WITH KEVLAR ® DK2™			USP D2K 325	USPD2KKD/000	82,6	3.25	12,7	0.50	2500	562	1,27	0.86
			USP D2K 450	USPD2KKG/000	114,3	4.50	12,7	0.50	3430	771	1,73	1.16
			USP D2K 750	USPD2KKL/000	190,5	7.50	12,7	0.50	5710	1284	2,83	1.90
ABRASION RESISTANT POLYAMIDE (1) AR			USP AR 325	USPARKD/000	82,6	3.25	12,7	0.50	2500	562	1,23	0.82
			USP AR 450	USPARKG/000	114,3	4.50	12,7	0.50	3430	771	1,67	1.12
			USP AR 750	USPARKL/000	190,5	7.50	12,7	0.50	5710	1284	2,73	1.83
ULTRA PERFORMANCE HOMOPOLYMER DELRIN ® UP	PBT	WITH TRACKING GUIDE	USPG UP 325	USPGUPKD/000	82,6	3.25	12,7	0.50	2500	562	1,27	0.86
			USPG UP 450	USPGUPKG/000	114,3	4.50	12,7	0.50	3430	771	1,73	1.16
			USPG UP 750	USPGUPKL/000	190,5	7.50	12,7	0.50	5710	1284	2,83	1.90
SPECIAL DELRIN ® REINFORCED WITH KEVLAR ® DK2™			USPG D2K 325	USPGD2KKD/000	82,6	3.25	12,7	0.50	2500	562	1,27	0.86
			USPG D2K 450	USPGD2KKG/000	114,3	4.50	12,7	0.50	3430	771	1,73	1.16
			USPG D2K 750	USPGD2KKL/000	190,5	7.50	12,7	0.50	5710	1284	2,83	1.90
ABRASION RESISTANT POLYAMIDE(1) AR			USPG AR 325	USPGARKD/000	82,6	3.25	12,7	0.50	2500	562	1,23	0.82
			USPG AR 450	USPGARKG/000	114,3	4.50	12,7	0.50	3430	771	1,67	1.12
			USPG AR 750	USPGARKL/000	190,5	7.50	12,7	0.50	5710	1284	2,73	1.83

(1) ACTUAL WIDTH CAN BE UP TO 0,5% GREATER THAN NOMINAL WIDTH

Standard packaging: Rolls of 3,048 m (10 feet)

Copyright Regina Catene Calibrate s.p.a. - 2020, All rights reserved

12,7 mm (0.5") THICKNESS
SOLID TOP

Completely closed surface, no gap between the modules, even when engaging on the sprockets. Particulary suitable for glass products.

- **Belt widths:** 154,2 mm (6") or wider in 76,2 mm (3") increments
- **Working Load (at 25°C/77°F):** 30000 N/m (2400 lbs/ft) for UP , DK2™ and AR materials
- **Belt weight:** 13,93 kg/m² (2.85 lbs/ft²) for UP and DK2™ materials
  13,40 kg/m² (2.74 lbs/ft²) for AR material

DUPONT® KEVLAR® INSIDE

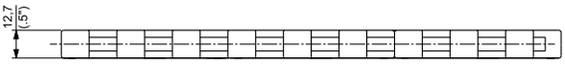

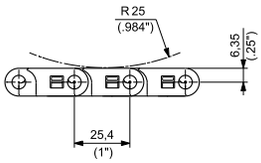

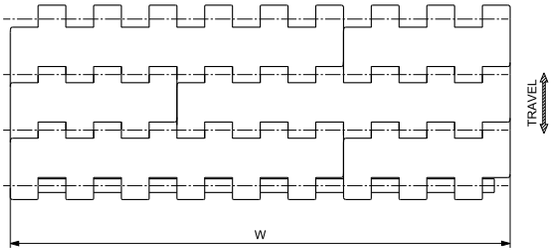

Materials see page 12
Sprockets see pages 241÷243
Applications see page 22

WIDTH W		MATERIALS			
		Module			Pin
		UP ULTRA PERFORMANCE HOMOPOLYMER DELRIN®	DK2™ SPECIAL DELRIN® REINFORCED WITH KEVLAR®	AR ABRASION RESISTANT POLYAMIDE[1]	
mm	inch	PART NUMBER	PART NUMBER	PART NUMBER	
152,20	6.0	**USPUP006**	**USPD2K006**	**USPAR006**	PBT
228,60	9.0	**USPUP009**	**USPD2K009**	**USPAR009**	
304,80	12.0	**USPUP012**	**USPD2K012**	**USPAR012**	
381,00	15.0	**USPUP015**	**USPD2K015**	**USPAR015**	
457,20	18.0	**USPUP018**	**USPD2K018**	**USPAR018**	
533,40	21.0	**USPUP021**	**USPD2K021**	**USPAR021**	
609,60	24.0	**USPUP024**	**USPD2K024**	**USPAR024**	
685,80	27.0	**USPUP027**	**USPD2K027**	**USPAR027**	
762,00	30.0	**USPUP030**	**USPD2K030**	**USPAR030**	
838,20	33.0	**USPUP033**	**USPD2K033**	**USPAR033**	
914,40	36.0	**USPUP036**	**USPD2K036**	**USPAR036**	
996,60	39.0	**USPUP039**	**USPD2K039**	**USPAR039**	
1066,80	42.0	**USPUP042**	**USPD2K042**	**USPAR042**	
1143,00	45.0	**USPUP045**	**USPD2K045**	**USPAR045**	
1219,20	48.0	**USPUP048**	**USPD2K048**	**USPAR048**	
1295,40	51.0	**USPUP051**	**USPD2K051**	**USPAR051**	
1371,60	54.0	**USPUP054**	**USPD2K054**	**USPAR054**	
1447,80	57.0	**USPUP057**	**USPD2K057**	**USPAR057**	
1524,00	60.0	**USPUP060**	**USPD2K060**	**USPAR060**	

[1] ACTUAL WIDTH CAN BE UP TO 1% GREATER THAN NOMINAL WIDTH

Standard packaging:
Belts are supplied in the length requested by the customer.

Belts wider than 1524 mm (60") are available in 76,2 (3") increments.
To identify the Part Numbers, please substitute the last three digits of the PN with the desired width.
Example: for a 63" wide belt (=60+3 inches), the PN for UP material is "USPUP063".
Available on request increments of 25,4 mm (1").
Example: 48+1=49 inches width, the PN for UP material is "USPUP049".

Copyright Regina Catene Calibrate s.p.a. - 2020, All rights reserved

ACTIVE TRANSFER MODULES
12,7 mm (0.5") THICKNESS
SOLID TOP

DUPONT® KEVLAR® INSIDE

To be used in combination with USP belt series.
Active transfer modules USPG ATM series allow the transfer of the products between two 90° conveyor tracks without using dead plates. The special module profile, wing shaped, supports the products dynamically during transfer on the take-away belt. Available left and right version.

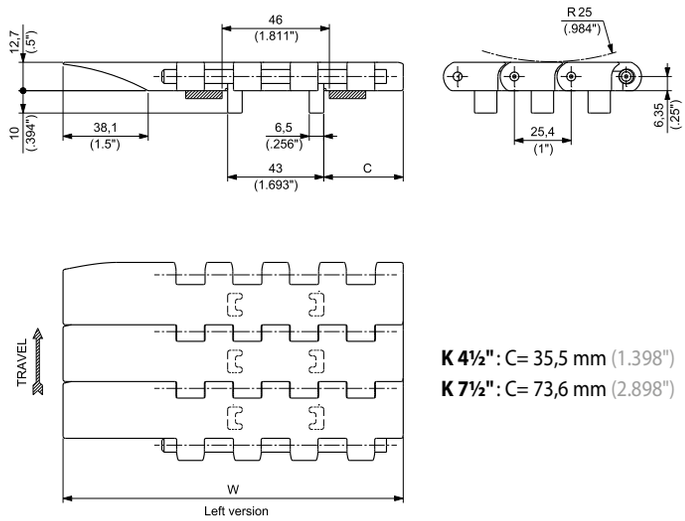

K 4½": C= 35,5 mm (1.398")
K 7½": C= 73,6 mm (2.898")

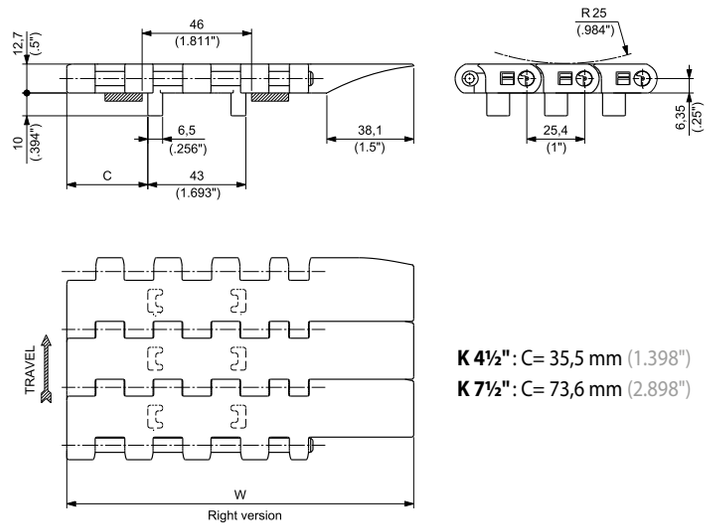

K 4½": C= 35,5 mm (1.398")
K 7½": C= 73,6 mm (2.898")

Materials see page 12
Sprockets see pages 241÷243
Applications see page 22

USPG ATM - Left Version

MATERIALS Plate	MATERIALS Pin	ITEM DESCRIPTION	PART NUMBER	WIDTH W mm	WIDTH W inch	PLATE THICKNESS mm	PLATE THICKNESS inch	WORKING LOAD (25°C/77°F) N	WORKING LOAD (25°C/77°F) lbs	WEIGHT kg/m	WEIGHT lbs/ft
ULTRA PERFORMANCE HOMOPOLYMER DELRIN ® UP	PBT	USPGATM UP 450 SX	USPGATMUP450S	152,4	6.0	12,7	0.5	3480	782	1,97	1.32
		USPGATM UP 750 SX	USPGATMUP750S	228,6	9.0	12,7	0.5	5715	1.285	3,06	2.05
SPECIAL DELRIN ® REINFORCED WITH KEVLAR ® DK2™		USPGATM D2K 450 SX	USPGATMD2K450S	152,4	6.0	12,7	0.5	3480	782	1,97	1.32
		USPGATM D2K 750 SX	USPGATMD2K750S	228,6	9.0	12,7	0.5	5715	1.285	3,06	2.05
ABRASION RESISTANT POLYAMIDE (1) AR		USPGATM AR 450 SX	USPGATMAR450S	152,4	6.0	12,7	0.5	3480	782	1,97	1.32
		USPGATM AR 750 SX	USPGATMAR750S	228,6	9.0	12,7	0.5	5715	1.285	3,06	2.05

USPG ATM - Right Version

MATERIALS Plate	MATERIALS Pin	ITEM DESCRIPTION	PART NUMBER	WIDTH W mm	WIDTH W inch	PLATE THICKNESS mm	PLATE THICKNESS inch	WORKING LOAD (25°C/77°F) N	WORKING LOAD (25°C/77°F) lbs	WEIGHT kg/m	WEIGHT lbs/ft
ULTRA PERFORMANCE HOMOPOLYMER DELRIN ® UP	PBT	USPGATM UP 450 DX	USPGATMUP450D	152,4	6.0	12,7	0.5	3480	782	1,97	1.32
		USPGATM UP 750 DX	USPGATMUP750D	228,6	9.0	12,7	0.5	5715	1.285	3,06	2.05
SPECIAL DELRIN ® REINFORCED WITH KEVLAR ® DK2™		USPGATM D2K 450 DX	USPGATMD2K450D	152,4	6.0	12,7	0.5	3480	782	1,97	1.32
		USPGATM D2K 750 DX	USPGATMD2K750D	228,6	9.0	12,7	0.5	5715	1.285	3,06	2.05
ABRASION RESISTANT POLYAMIDE(1) AR		USPGATM AR 450 DX	USPGATMAR450D	152,4	6.0	12,7	0.5	3480	782	1,97	1.32
		USPGATM AR 750 DX	USPGATMAR750D	228,6	9.0	12,7	0.5	5715	1.285	3,06	2.05

(1) ACTUAL WIDTH CAN BE UP TO 0,5% GREATER THAN NOMINAL WIDTH

Standard packaging: Rolls of 3,048 m (10 feet)

Copyright Regina Catene Calibrate s.p.a. - 2020, All rights reserved

SUITABLE FOR CHAINS:

- **USPM**
- **USP**
- **LBP USPM**
- **LBP XSPM**
- **HF USPM / HFS USPM**

MATERIALS

SPROCKETS: **PA** POLYAMIDE

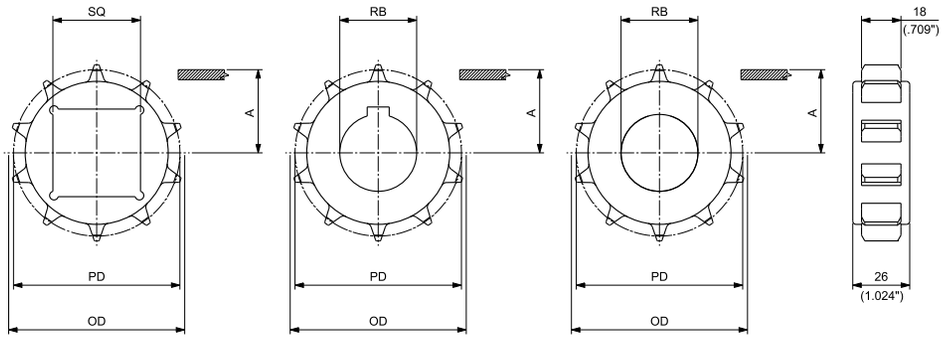

SQUARE BORE - DRIVE/IDLER ROUND BORE - DRIVE ROUND BORE - IDLER

MACHINED SOLID DRIVE AND IDLER SPROCKETS

N. TEETH	PITCH DIAMETER PD		OUTSIDE DIAMETER OD		WEAR STRIP POSITIONING A		BORE SIZE*		PART NUMBER SQUARE BORE SQ	PART NUMBER ROUND BORE RB		WEIGHT	
	mm	inch	mm	inch	mm	inch	mm	inch**	DRIVE/IDLER	DRIVE	IDLER	Kg	lbs
8	66,37	2.613	63,80	2.512	26,80	1.055	20			**MPBATUSP0820**	**MPBAFUSP0820**	0,05	0.11
							25			**MPBATUSP0825**	**MPBAFUSP0825**	0,05	0.10
							30			**MPBATUSP0830**	**MPBAFUSP0830**	0,04	0.09
								1		**MPBATUSP08254**	**MPBAFUSP08254**	0,05	0.10
								1 3/16		**MPBATUSP08301**	**MPBAFUSP08301**	0,04	0.09
								1 1/4		**MPBATUSP08317**	**MPBAFUSP08317**	0,04	0.08
10	82,19	3.236	80,40	3.165	34,70	1.366	30		**MPBAQUSP1030**	**MPBATUSP1030**	**MPBAFUSP1030**	0,09	0.19
							35			**MPBATUSP1035**	**MPBAFUSP1035**	0,08	0.17
							40		**MPBAQUSP1040**	**MPBATUSP1040**	**MPBAFUSP1040**	0,07	0.15
								1		**MPBATUSP10254**	**MPBAFUSP10254**	0,09	0.20
								1 3/16		**MPBATUSP10301**	**MPBAFUSP10301**	0,09	0.19
								1 1/4		**MPBATUSP10317**	**MPBAFUSP10317**	0,08	0.18

*In case of round bore, diameter is indicated. In case of square bore, side of the square is indicated.
** Imperial round bore drive sprockets are supplied with setscrew. Metric round bore drive sprockets are supplied without setscrew.

Copyright Regina Catene Calibrate s.p.a. - 2020, All rights reserved

SPROCKETS - **USP SERIES**

SUITABLE FOR CHAINS:

- **USPM**
- **USP**
- **LBP USPM**
- **LBP XSPM**
- **HF USPM / HFS USPM**

MATERIALS		
SPROCKETS:	PGF	REINFORCED POLYAMIDE
SCREW:	SS	STAINLESS STEEL
NUTS:	S+ZN	ZINC PLATED STEEL

12T, 13T,14T, 15T & 16T SPROCKETS

(for 18T & 21T see next page)

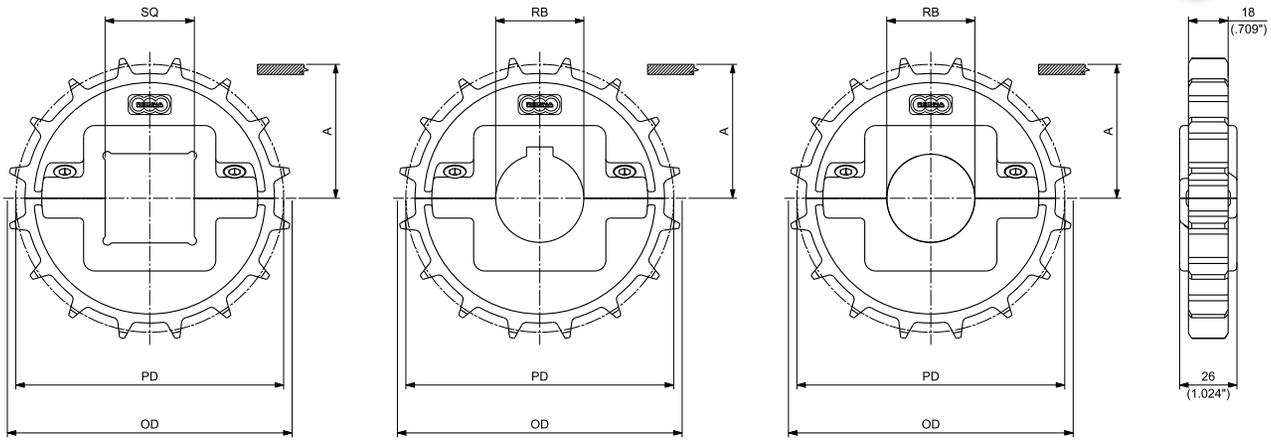

SQUARE BORE - DRIVE/IDLER | ROUND BORE - DRIVE | ROUND BORE - IDLER

MOULDED SPLIT DRIVE AND IDLER SPROCKETS

N. TEETH	PITCH DIAMETER PD		OUTSIDE DIAMETER OD		WEAR STRIP POSITIONING A		BORE SIZE*		PART NUMBER SQUARE BORE SQ	PART NUMBER ROUND BORE RB		WEIGHT	
	mm	inch	mm	inch	mm	inch	mm	inch**	DRIVE/IDLER	DRIVE	IDLER	Kg	lbs
NEW 12	98,14	3.864	97,00	3.819	42,70	1.681	30			MPBSTUSP1230	MPBSFUSP1230	0,12	0.27
							35			MPBSTUSP1235	MPBSFUSP1235	0,12	0.26
							40			MPBSTUSP1240	MPBSFUSP1240	0,11	0.25
								1		MPBSTUSP12254	MPBSFUSP12254	0,13	0.28
								1¼		MPBSTUSP12317	MPBSFUSP12317	0,12	0.27
								1½	MPBSQUSP12381			0,11	0.24
NEW 13	106,14	4.179	105,50	4.154	46,70	1.839	30			MPBSTUSP1330	MPBSFUSP1330	0,12	0.26
							35			MPBSTUSP1335	MPBSFUSP1335	0,11	0.25
							40			MPBSTUSP1340	MPBSFUSP1340	0,11	0.24
								1		MPBSTUSP13254	MPBSFUSP13254	0,12	0.27
								1¼		MPBSTUSP13317	MPBSFUSP13317	0,12	0.26
								1½	MPBSQUSP13381			0,11	0.24
NEW 14	114,15	4.494	113,15	4.455	50,70	1.996	30			MPBSTUSP1430	MPBSFUSP1430	0,15	0.33
							35			MPBSTUSP1435	MPBSFUSP1435	0,14	0.32
							40		MPBSQUSP1440	MPBSTUSP1440	MPBSFUSP1440	0,14	0.30
								1		MPBSTUSP14254	MPBSFUSP14254	0,15	0.34
								1¼		MPBSTUSP14317	MPBSFUSP14317	0,15	0.32
								1½	MPBSQUSP14381	MPBSTUSP14381	MPBSFUSP14381	0,14	0.31
NEW 15	122,17	4.810	121,50	4.783	54,70	2.154	30			MPBSTUSP1530	MPBSFUSP1530	0,19	0.42
							35			MPBSTUSP1535	MPBSFUSP1535	0,18	0.40
							40		MPBSQUSP1540	MPBSTUSP1540	MPBSFUSP1540	0,18	0.39
								1		MPBSTUSP15254	MPBSFUSP15254	0,19	0.42
								1 3/16		MPBSTUSP15301	MPBSFUSP15301	0,19	0.41
								1¼		MPBSTUSP15317	MPBSFUSP15317	0,19	0.41
								1 7/16		MPBSTUSP15365	MPBSFUSP15365	0,18	0.40
								1½	MPBSQUSP15381	MPBSTUSP15381	MPBSFUSP15381	0,18	0.40
NEW 16	130,19	5.126	129,20	5.087	58,80	2.315	30			MPBSTUSP1630	MPBSFUSP1630	0,20	0.44
							35			MPBSTUSP1635	MPBSFUSP1635	0,20	0.43
							40		MPBSQUSP1640	MPBSTUSP1640	MPBSFUSP1640	0,19	0.42
							45			MPBSTUSP1645	MPBSFUSP1645	0,18	0.40
							50			MPBSTUSP1650	MPBSFUSP1650	0,17	0.38
								1		MPBSTUSP16254	MPBSFUSP16254	0,20	0.45
								1 3/16		MPBSTUSP16301	MPBSFUSP16301	0,20	0.44
								1¼		MPBSTUSP16317	MPBSFUSP16317	0,20	0.44
								1 7/16		MPBSTUSP16365	MPBSFUSP16365	0,19	0.43
								1½	MPBSQUSP16381	MPBSTUSP16381	MPBSFUSP16381	0,19	0.42

*In case of round bore, diameter is indicated. In case of square bore, side of the square is indicated.
** Imperial round bore drive sprockets are supplied with setscrew. Metric round bore drive sprockets are supplied without setscrew.

Copyright Regina Catene Calibrate s.p.a. - 2020, All rights reserved

SUITABLE FOR CHAINS:

- **USPM**
- **USP**
- **LBP USPM**
- **LBP XSPM**
- **HF USPM / HFS USPM**

MATERIALS		
SPROCKETS:	PGF	REINFORCED POLYAMIDE
SCREW:	SS	STAINLESS STEEL
NUTS:	S+ZN	ZINC PLATED STEEL

18T & 21T SPROCKETS

(for 12T, 13T,14T, 15T & 16T see previous page)

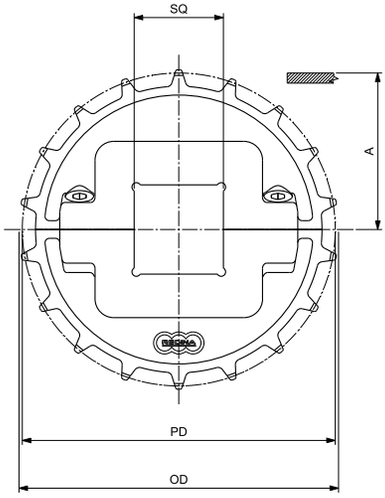

SQUARE BORE - DRIVE/IDLER

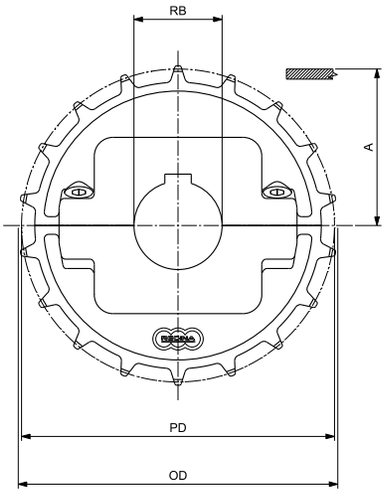

ROUND BORE - DRIVE

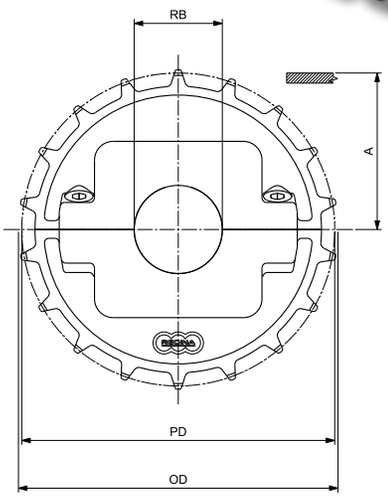

ROUND BORE - IDLER

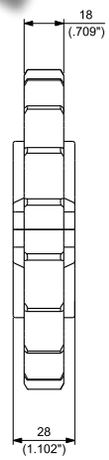

MOULDED SOLID IDLER WHEELS
SEE PAGE 123

MOULDED SPLIT IDLER WHEELS
SEE PAGE 186

MACHINED SPLIT IDLER WHEELS
SEE PAGE 125

MOULDED SPLIT DRIVE AND IDLER SPROCKETS

N. TEETH	PITCH DIAMETER PD		OUTSIDE DIAMETER OD		WEAR STRIP POSITIONING A		BORE SIZE*		PART NUMBER SQUARE BORE SQ	PART NUMBER ROUND BORE RB		WEIGHT	
	mm	inch	mm	inch	mm	inch	mm	inch**	DRIVE/IDLER	DRIVE	IDLER	Kg	lbs
							30			**MPBSTUSP1830**	**MPBSFUSP1830**	0,33	0.73
							35			**MPBSTUSP1835**	**MPBSFUSP1835**	0,32	0.71
							40		**MPBSQUSP1840**	**MPBSTUSP1840**	**MPBSFUSP1840**	0,32	0.70
							45			**MPBSTUSP1845**	**MPBSFUSP1845**	0,31	0.68
							50		**MPBSQUSP1850**	**MPBSTUSP1850**	**MPBSFUSP1850**	0,30	0.66
							60		**MPBSQUSP1860**	**MPBSTUSP1860**	**MPBSFUSP1860**	0,28	0.61
18	146,27	5.759	145,00	5.709	66,79	2.629	65		**MPBSQUSP1865**			0,24	0.52
								1		**MPBSTUSP18254**	**MPBSFUSP18254**	0,34	0.74
								1 3/16		**MPBSTUSP18301**	**MPBSFUSP18301**	0,33	0.73
								1 1/4		**MPBSTUSP18317**	**MPBSFUSP18317**	0,33	0.72
								1 7/16		**MPBSTUSP18365**	**MPBSFUSP18365**	0,32	0.71
								1 1/2	**MPBSQUSP18381**	**MPBSTUSP18381**	**MPBSFUSP18381**	0,32	0.70
								2		**MPBSTUSP18508**	**MPBSFUSP18508**	0,30	0.65
							30			**MPBSTUSP2130**	**MPBSFUSP2130**	0,40	0.88
							35			**MPBSTUSP2135**	**MPBSFUSP2135**	0,39	0.86
							40		**MPBSQUSP2140**	**MPBSTUSP2140**	**MPBSFUSP2140**	0,38	0.85
							45			**MPBSTUSP2145**	**MPBSFUSP2145**	0,38	0.83
							50		**MPBSQUSP2150**	**MPBSTUSP2150**	**MPBSFUSP2150**	0,37	0.81
							60		**MPBSQUSP2160**	**MPBSTUSP2160**	**MPBSFUSP2160**	0,34	0.76
21	170,42	6.709	170,00	6.693	78,84	3.104	65		**MPBSQUSP2165**			0,31	0.67
								1		**MPBSTUSP21254**	**MPBSFUSP21254**	0,40	0.89
								1 3/16		**MPBSTUSP21301**	**MPBSFUSP21301**	0,40	0.88
								1 1/4		**MPBSTUSP21317**	**MPBSFUSP21317**	0,40	0.88
								1 7/16		**MPBSTUSP21365**	**MPBSFUSP21365**	0,39	0.86
								1 1/2	**MPBSQUSP21381**	**MPBSTUSP21381**	**MPBSFUSP21381**	0,39	0.85
								2		**MPBSTUSP21508**	**MPBSFUSP21508**	0,36	0.80

*In case of round bore, diameter is indicated. In case of square bore, side of the square is indicated.
** Imperial round bore drive sprockets are supplied with setscrew. Metric round bore drive sprockets are supplied without setscrew.

Copyright Regina Catene Calibrate s.p.a. - 2020, All rights reserved

REGINA CHAIN

PERFORMANCE IN MOTION

Matveyor®

1″ Pitch Sideflexing Chains

1" PITCH LIGHT DUTY SIDEFLEXING CHAINS - **783T, 783M AND 782M SERIES**

INDUSTRIES AND APPLICATIONS

Suitable for handling loose products, such as plastic & glass bottles and aluminium & steel cans in the following industries and applications.

INDUSTRIES

Bottling and canning

Container manufacturing

Consumer goods

APPLICATIONS

Single lane & mass conveying

Pressureless inliners and combiners

FEATURES

- 783 and 782 series can be used on conveyors side by side with 600, 610, 500, 300, 200, 1500, 1600, 7200, 7300 series due to the same thickness of 8,7mm for easy installation and standardization of wearstrips.
- Tab chains 783T series use the same curves as Fitetop plastic chains 880T, 879T series and Flitetop steel chains 881T and 981T series.

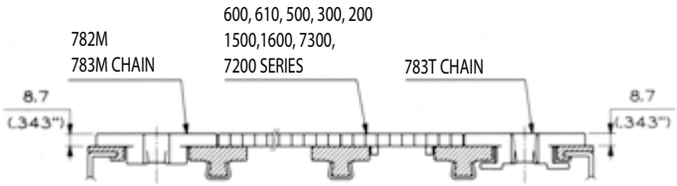

1" PITCH HEAVY DUTY SIDEFLEXING CHAINS - **793T, 793M AND 793L SERIES**

INDUSTRIES AND APPLICATIONS

Suitable for handling loose products, such as plastic & glass bottles and aluminium & steel cans in the following industries and applications.

INDUSTRIES

Bottling and canning

Container manufacturing
(in particular glass manufacturing)

Consumer goods

APPLICATIONS

Single lane & mass conveying

Pressureless Inliners and combiners

FEATURES

- 793 series can be used on conveyors side by side with USP, USPM, UCC series due to the same thickness of 12,7 mm for easy installation and standardization of wearstrips.
- Tab chains 793T series use the same curves as Flitetop plastic chains 880T, 879T series and steel chains 881T and 981T series.

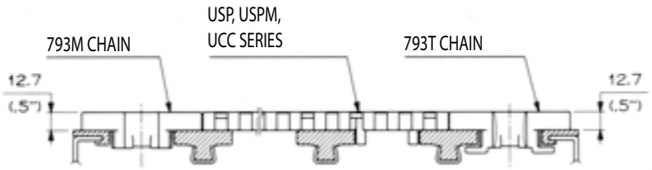

Copyright Regina Catene Calibrate s.p.a. - 2020, All rights reserved

TAB
8,7 mm (0.343") THICKNESS
SOLID TOP
LIGHT DUTY

DUPONT® KEVLAR® INSIDE

e-F.A.S.T. ECOLOGICAL FRICTION ABATING THERMO-PLASTIC

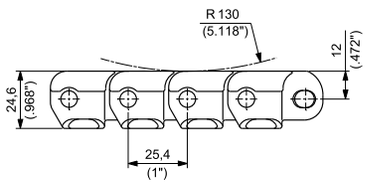

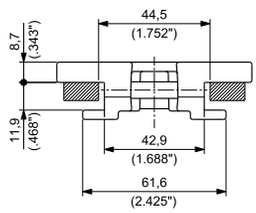

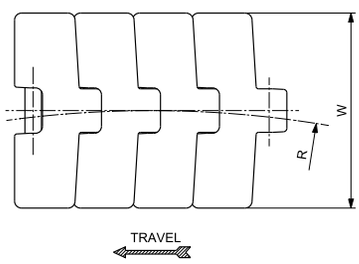

Materials see page 12
Sprockets see page 251
Corner tracks see page 320
Applications see page 22

MATERIALS Plate	MATERIALS Pin	ITEM DESCRIPTION	PART NUMBER	WIDTH W mm	WIDTH W Inch	PLATE THICKNESS mm	PLATE THICKNESS inch	SIDEFLEXING RADIUS R mm	SIDEFLEXING RADIUS R inch	WORKING LOAD (25°C/77°F) N	WORKING LOAD (25°C/77°F) lbs	WEIGHT kg/m	WEIGHT lbs/ft
ULTRA PERFORMANCE HOMOPOLYMER DELRIN ® UP		UP 783T K 3 ¼	UP783TKD/000	82,6	3.25	8,7	0.343	457,2	18	1700	382	1,76	1.19
		UP 783T K 83,8	UP783TKRA/000	83,8	3.30	8,7	0.343	457,2	18	1700	382	1,78	1.19
		UP 783T K 4 ½	UP783TKG/000	114,3	4.50	8,7	0.343	609,6	24	1700	382	2,04	1.37
SPECIAL DELRIN ® REINFORCED WITH KEVLAR ® DK2™	AUSTENITIC STAINLESS STEEL	D2K 783T K 3 ¼	D2K783TKD/000	82,6	3.25	8,7	0.343	457,2	18	1700	382	1,76	1.19
		D2K 783T K 83,8	D2K783TKRA/000	83,8	3.30	8,7	0.343	457,2	18	1700	382	1,78	1.19
		D2K 783T K 4 ½	D2K783TKG/000	114,3	4.50	8,7	0.343	609,6	24	1700	382	2,04	1.37
NEW ECOLOGICAL FRICTION ABATING THERMOPLASTIC e-F.A.S.T.		EF 783T K 3 ¼	EF783TKD/000	82,6	3.25	8,7	0.343	457,2	18	1700	382	1,76	1.19
		EF 783T K 83,8	EF783TKRA/000	83,8	3.30	8,7	0.343	457,2	18	1700	382	1,78	1.19
		EF 783T K 4 ½	EF783TKG/000	114,3	4.50	8,7	0.343	609,6	24	1700	382	2,04	1.37

Standard packaging: Rolls of 3,048 m (10 feet)

Copyright Regina Catene Calibrate s.p.a. - 2020, All rights reserved

MAGNETIC
8,7 mm (0.343") THICKNESS
SOLID TOP (783M) AND FLUSH GRID (782M)
LIGHT DUTY

DUPONT® KEVLAR® INSIDE

e-F.A.S.T. ECOLOGICAL FRICTION ABATING THERMO-PLASTIC

783M - SOLID TOP SURFACE

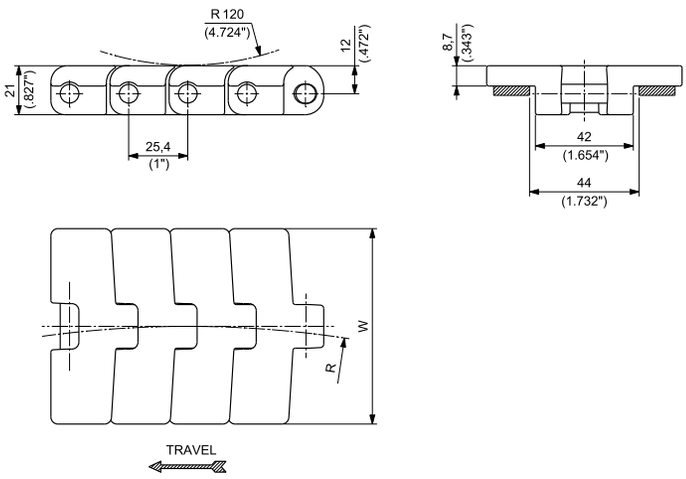

782M - FLUSH GRID SURFACE

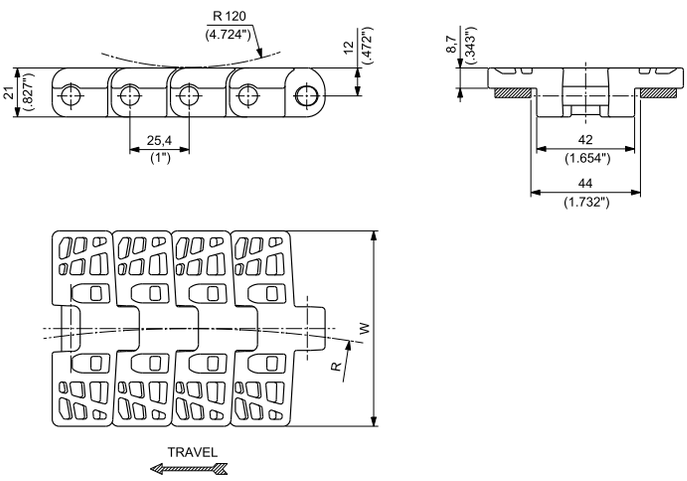

Materials see page 12
Sprockets see page 251
Corner tracks see page 280
Applications see page 22

MATERIALS Plate	MATERIALS Pin	SURFACE	ITEM DESCRIPTION	PART NUMBER	WIDTH W mm	WIDTH W inch	PLATE THICKNESS mm	PLATE THICKNESS inch	SIDEFLEXING RADIUS R mm	SIDEFLEXING RADIUS R inch	WORKING LOAD (25°C/77°F) N	WORKING LOAD (25°C/77°F) lbs	WEIGHT kg/m	WEIGHT lbs/ft
ULTRA PERFORMANCE HOMOPOLYMER DELRIN ® UP	MAGNETIC STAINLESS STEEL	SOLID TOP	UP 783M K 83,8	UP783MKRA/000	83,8	3.30	8,7	0.343	500	19.69	1700	382	1,82	1.22
SPECIAL DELRIN ® REINFORCED WITH KEVLAR ® DK2™			D2K 783M K 83,8	D2K783MKRA/000	83,8	3.30	8,7	0.343	500	19.69	1700	382	1,82	1.22
NEW ECOLOGICAL FRICTION ABATING THERMOPLASTIC e-F.A.S.T.			EF 783M K 83,8	EF783MKRA/000	83,8	3.30	8,7	0.343	500	19.69	1700	382	1,82	1.22
ULTRA PERFORMANCE HOMOPOLYMER DELRIN ® UP		FLUSH GRID	UP 782M K 83,8	UP782MKRA/000	83,8	3.30	8,7	0.343	500	19.69	1700	382	1,71	1.15
SPECIAL DELRIN ® REINFORCED WITH KEVLAR ® DK2™			D2K 782M K 83,8	D2K782MKRA/000	83,8	3.30	8,7	0.343	500	19.69	1700	382	1,71	1.15
NEW ECOLOGICAL FRICTION ABATING THERMOPLASTIC e-F.A.S.T.			EF 782M K 83,8	EF782MKRA/000	83,8	3.30	8,7	0.343	500	19.69	1700	382	1,71	1.15

Standard packaging: Rolls of 3,048 m (10 feet)

Copyright Regina Catene Calibrate s.p.a. - 2020, All rights reserved

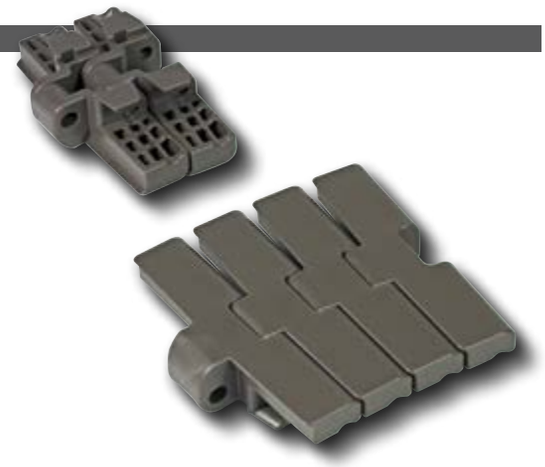

TAB
12,7 mm (0.5") THICKNESS
SOLID TOP
HEAVY DUTY

DUPONT® KEVLAR® INSIDE

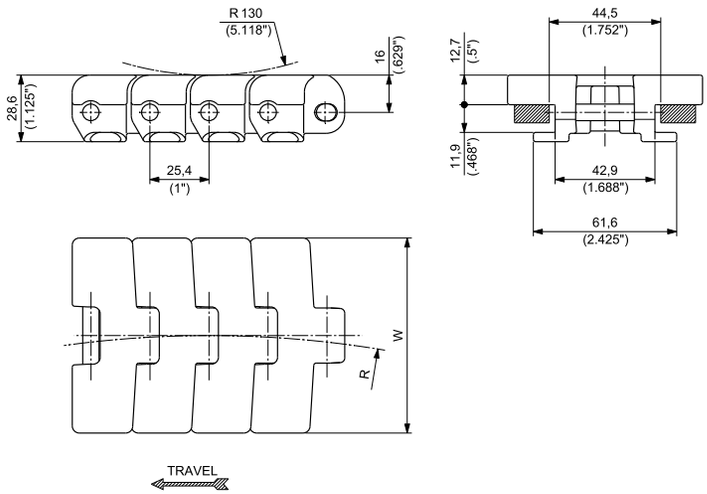

Materials see page 12
Sprockets see page 251
Corner tracks see page 320
Applications see page 22

MATERIALS Plate	MATERIALS Pin	ITEM DESCRIPTION	PART NUMBER	WIDTH W mm	WIDTH W inch	PLATE THICKNESS mm	PLATE THICKNESS inch	SIDEFLEXING RADIUS R mm	SIDEFLEXING RADIUS R inch	WORKING LOAD (25°C/77°F) N	WORKING LOAD (25°C/77°F) lbs	WEIGHT kg/m	WEIGHT lbs/ft
ULTRA PERFORMANCE HOMOPOLYMER DELRIN® UP	AUSTENITIC STAINLESS STEEL	UP 793T K 3 ¼	UP793TKD/000	82,6	3.25	12,7	0.50	457,2	18	2200	495	2,09	1.41
		UP 793T K 83,8	UP793TKRA/000	83,8	3.30	12,7	0.50	457,2	18	2200	495	2,11	1.42
		UP 793T K 4 ½	UP793TKG/000	114,3	4.50	12,7	0.50	609,6	24	2200	495	2,48	1.67
SPECIAL DELRIN® REINFORCED WITH KEVLAR® DK2™		D2K 793T K 3 ¼	D2K793TKD/000	82,6	3.25	12,7	0.50	457,2	18	2200	495	2,09	1.41
		D2K 793T K 83,8	D2K793TKRA/000	83,8	3.30	12,7	0.50	457,2	18	2200	495	2,11	1.42
		D2K 793T K 4 ½	D2K793TKG/000	114,3	4.50	12,7	0.50	609,6	24	2200	495	2,48	1.67
ABRASION RESISTANT POLYAMIDE AR		AR 793T K 3 ¼	AR793TKD/000	82,6	3.25	12,7	0.50	457,2	18	2200	495	2,02	1.36
		AR 793T K 83,8	AR793TKRA/000	83,8	3.30	12,7	0.50	457,2	18	2200	495	2,04	1.37
		AR 793T K 4 ½	AR793TKG/000	114,3	4.50	12,7	0.50	609,6	24	2200	495	2,40	1.61

Standard packaging: Rolls of 3,048 m (10 feet)

Copyright Regina Catene Calibrate s.p.a. - 2020, All rights reserved

MAGNETIC
12,7 mm (0.5") THICKNESS
SOLID TOP
HEAVY DUTY

DUPONT® KEVLAR® INSIDE

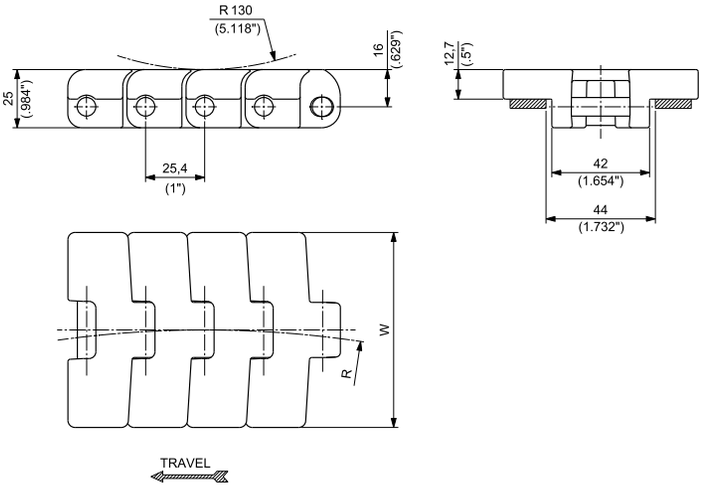

Materials see page 12
Sprockets see page 251
Corner tracks see page 280
Applications see page 22

MATERIALS Plate	MATERIALS Pin	ITEM DESCRIPTION	PART NUMBER	WIDTH W mm	WIDTH W inch	PLATE THICKNESS mm	PLATE THICKNESS inch	SIDEFLEXING RADIUS R mm	SIDEFLEXING RADIUS R inch	WORKING LOAD (25°C/77°F) N	WORKING LOAD (25°C/77°F) lbs	WEIGHT kg/m	WEIGHT lbs/ft
ULTRA PERFORMANCE HOMOPOLYMER DELRIN® UP	MAGNETIC STAINLESS STEEL	UP 793M K 83,8	UP793MKRA/000	83,8	3.30	12,7	0.50	500	19.685	2200	495	2,10	1.41
		UP 793M K 4 ½	UP793MKG/000	114,3	4.50	12,7	0.50	500	19.685	2200	495	2,46	1.65
SPECIAL DELRIN® REINFORCED WITH KEVLAR® DK2™		D2K 793M K 83,8	D2K793MKRA/000	83,8	3.30	12,7	0.50	500	19.685	2200	495	2,10	1.41
		D2K 793M K 4 ½	D2K793MKG/000	114,3	4.50	12,7	0.50	500	19.685	2200	495	2,46	1.65
ABRASION RESISTANT POLYAMIDE AR		AR 793M K 83,8	AR793MKRA/000	83,8	3.30	12,7	0.50	500	19.685	2200	495	2,04	1.37
		AR 793M K 4 ½	AR793MKG/000	114,3	4.50	12,7	0.50	500	19.685	2200	495	2,38	1.60

Standard packaging: Rolls of 3,048 m (10 feet)

Copyright Regina Catene Calibrate s.p.a. - 2020, All rights reserved

1" PITCH SIDEFLEXING CHAINS - **793L SERIES**

LOW PIN CENTER
12,7 mm (0.5") THICKNESS
SOLID TOP
HEAVY DUTY

NEW

The special Low Pin Center chain design holds the chains down flat and level in the curves, unlike conventional beveled and TAB chain styles, which lift up on the outer edges. This eliminates product tippage, especially on multi-strand conveyors. All of this comes without the extra cost of magnetic corner tracks.
These chains can simply be lifted anywhere in the carry track for easy cleaning and maintenance.

DUPONT® KEVLAR® INSIDE

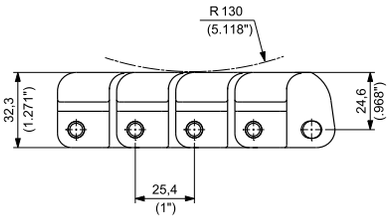

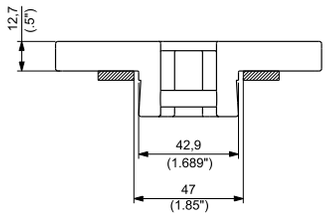

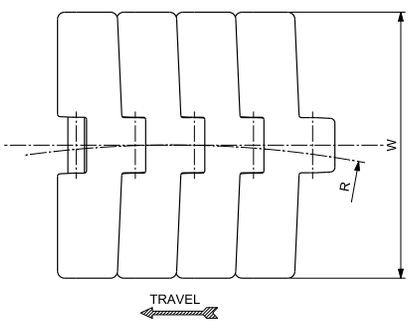

Materials see page 12
Sprockets see page 251
Corner tracks see page 328
Applications see page 22

MATERIALS Plate	MATERIALS Pin	ITEM DESCRIPTION	PART NUMBER	WIDTH W mm	WIDTH W inch	PLATE THICKNESS mm	PLATE THICKNESS inch	SIDEFLEXING RADIUS R mm	SIDEFLEXING RADIUS R inch	WORKING LOAD (25°C/77°F) N	WORKING LOAD (25°C/77°F) lbs	WEIGHT kg/m	WEIGHT lbs/ft
ULTRA PERFORMANCE HOMOPOLYMER DELRIN ® UP	AUSTENITIC STAINLESS STEEL	UP 793L K 4 ½	UP793LKG/000	114,3	4.5	12,7	0.50	609,6	24	2200	495	2,55	1.71
SPECIAL DELRIN ® REINFORCED WITH KEVLAR ® DK2™	AUSTENITIC STAINLESS STEEL	D2K 793L K 4 ½	D2K793LKG/000	114,3	4.5	12,7	0.50	609,6	24	2200	495	2,55	1.71

Standard packaging: Rolls of 3,048 m (10 feet)

Copyright Regina Catene Calibrate s.p.a. - 2020, All rights reserved

SUITABLE FOR CHAINS:

- **782M**
- **783M**
- **783T**
- **793M**
- **793T**
- **793L**

MATERIALS		
SPROCKETS:	PGF	REINFORCED POLYAMIDE
SCREW:	SS	STAINLESS STEEL
NUTS:	S+ZN	ZINC PLATED STEEL

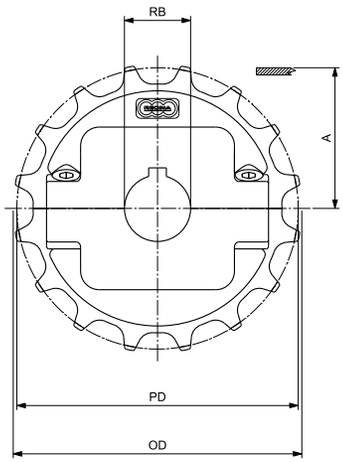

ROUND BORE - DRIVE

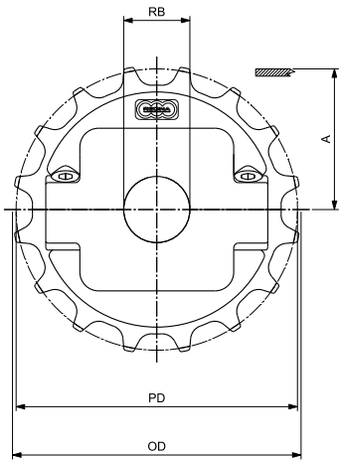

ROUND BORE - IDLER

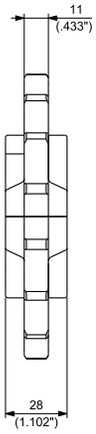

MOULDED SOLID IDLER WHEELS FOR 782M, 783M, 793M CHAINS
SEE PAGE 123

MOULDED SPLIT IDLER WHEELS FOR 782M, 783M, 793M CHAINS
SEE PAGE 186

MACHINED SPLIT IDLER WHEELS FOR 782M, 783M, 793M CHAINS
SEE PAGE 125

MOULDED SPLIT DRIVE AND IDLER SPROCKETS

N. TEETH	PITCH DIAMETER PD mm	PITCH DIAMETER PD inch	OUTSIDE DIAMETER OD mm	OUTSIDE DIAMETER OD inch	WEAR STRIP POSITIONING A mm	WEAR STRIP POSITIONING A inch	BORE SIZE* mm	BORE SIZE* inch**	PART NUMBER ROUND BORE RB DRIVE	PART NUMBER ROUND BORE RB IDLER	WEIGHT Kg	WEIGHT lbs
16	130,20	5.126	131,30	5.169	68,40	2.693	25		**CMT027821601**	**CMT037821601**	0,26	0.58
							30		**CMT027821602**	**CMT037821602**	0,26	0.57
							35		**CMT027821603**	**CMT037821603**	0,25	0.56
							40		**CMT027821604**	**CMT037821604**	0,24	0.54
							45		**CMT027821605**	**CMT037821605**	0,24	0.52
							50		**CMT027821613**	**CMT037821613**	0,23	0.50
					77,00 (for 793L chain only)	3.031		1	**CMT027821606**	**CMT037821606**	0,26	0.58
								1 3/16	**CMT027821607**	**CMT037821607**	0,26	0.57
								1 1/4	**CMT027821608**	**CMT037821608**	0,26	0.57
								1 3/8	**CMT027821611**	**CMT037821611**	0,25	0.56
								1 7/16	**CMT027821609**	**CMT037821609**	0,25	0.55
								1 1/2	**CMT027821610**	**CMT037821610**	0,25	0.55
18	146,27	5.759	147,60	5.811	76,44	3.009	25		**CMT027821801**	**CMT037821801**	0,29	0.63
							30		**CMT027821802**	**CMT037821802**	0,28	0.62
							35		**CMT027821803**	**CMT037821803**	0,28	0.61
							40		**CMT027821804**	**CMT037821804**	0,27	0.59
							45		**CMT027821805**	**CMT037821805**	0,26	0.58
							50		**CMT027821813**	**CMT037821813**	0,25	0.56
					85,04 (for 793L chain only)	3.348		1	**CMT027821806**	**CMT037821806**	0,29	0.63
								1 3/16	**CMT027821807**	**CMT037821807**	0,28	0.62
								1 1/4	**CMT027821808**	**CMT037821808**	0,28	0.62
								1 3/8	**CMT027821811**	**CMT037821811**	0,28	0.61
								1 7/16	**CMT027821809**	**CMT037821809**	0,27	0.60
								1 1/2	**CMT027821810**	**CMT037821810**	0,27	0.60
19	154,32	6.076	156,30	6.154	80,46	3.168	25		**CMT027821901**	**CMT037821901**	0,32	0.71
							30		**CMT027821902**	**CMT037821902**	0,31	0.69
							35		**CMT027821903**	**CMT037821903**	0,31	0.68
							40		**CMT027821904**	**CMT037821904**	0,30	0.66
							45		**CMT027821905**	**CMT037821905**	0,29	0.65
							50		**CMT027821913**	**CMT037821913**	0,28	0.63
					89,06 (for 793L chain only)	3.506		1	**CMT027821906**	**CMT037821906**	0,32	0.70
								1 3/16	**CMT027821907**	**CMT037821907**	0,31	0.69
								1 1/4	**CMT027821908**	**CMT037821908**	0,31	0.69
								1 3/8	**CMT027821911**	**CMT037821911**	0,31	0.68
								1 7/16	**CMT027821909**	**CMT037821909**	0,31	0.68
								1 1/2	**CMT027821910**	**CMT037821910**	0,30	0.67

*Diameter is indicated.
** Imperial round bore drive sprockets are supplied with setscrew. Metric round bore drive sprockets are supplied without setscrew.

Copyright Regina Catene Calibrate s.p.a. - 2020, All rights reserved

PERFORMANCE IN MOTION

Matveyor®

1¼" Pitch Heavy Duty Sideflexing Belts

INDUSTRIES AND APPLICATIONS

REGINA Sideflexing belts are suitable for packaging applications requiring speed and heavy packs carriage around curves, in particular: multi packs of plastic bottles, cartons, shrink wrapped cans.

INDUSTRIES

Bottling & canning

Food filling

Pharmaceutical

Paper / Cardboard

Consumer goods

BELT CONVEYING CAPABILITY

L-PATH

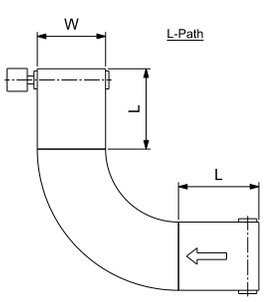

APPLICATION EXAMPLE 1

- Belt width W: 850 mm
- Straight section L: 1200 mm
- Curve radius: 1600 mm
- Speed: 30 m/min
- Load: N°32 shrink packs 3x2 1.SL PET in double track
- Total weight on the conveyor: 290 kg

U-PATH

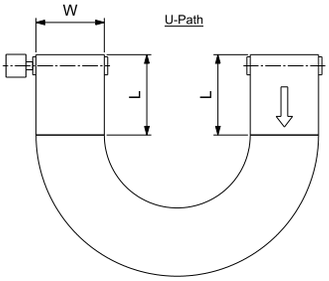

APPLICATION EXAMPLE 2

- Belt width W: 850 mm
- Straight section L: 1200 mm
- Curve radius: 1600 mm
- Speed: 30 m/min
- Load: N°45 shrink packs 3x2 1.SL PET in double track
- Total weight on the conveyor: 400 kg

C-PATH

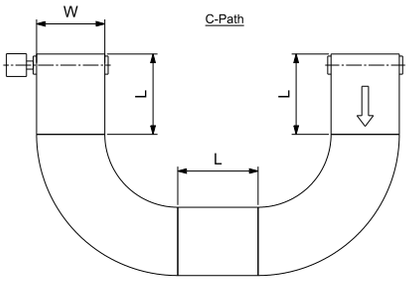

APPLICATION EXAMPLE 3

- Belt width W: 850 mm
- Straight section L: 1200 mm
- Curve radius: 1600 mm
- Speed: 30 m/min
- Load: N°55 shrink packs 3x2 1L PET in double track
- Total weight on the conveyor: 330 kg
- N° 1 drive only to link two curves

Copyright Regina Catene Calibrate s.p.a. - 2020, All rights reserved

1 1/4" PITCH HEAVY DUTY SIDEFLEXING BELTS - **2556 SERIES**

FEATURES

BENEFITS

- Belt equipped with radial bearing.
- Split guide system to prevent overturning and provide radial force resistance in sideflexing section.

- Drastic friction reduction in curve sections.
- No curve overheating
  -Drastic wear and noise reduction
  -Smooth belt running
- No special materiai requirement for curve profile (UHMWPE standard)
  -Cost saving

- Outer modules with reinforced hinges and larger cross-section.

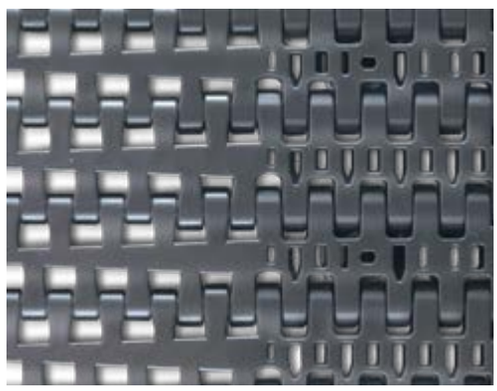

- High conveying capability for the most demanding layouts:
  -180° single curve
  -2x90° curves

- Available in tight radius version (SR):
  -Reinforced design of the inner modules
  -Minimum ratio (1.2) between inner radius of the curve and belt width.

- Higher transversal and longitudinal stiffness.
- More compact curves for reduced footprint layout.

- "Poka yoke" design of the outer hinges.

- Prevention of any assembling mistakes.

- Guide system suitable for conveyors frame with 44 mm guide clearance.

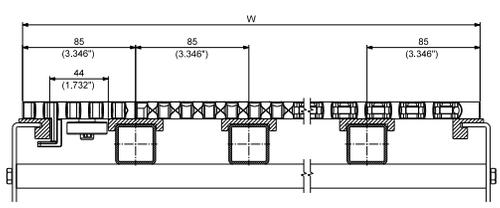

- Wear strips standardization.

Copyright Regina Catene Calibrate s.p.a. - 2020, All rights reserved

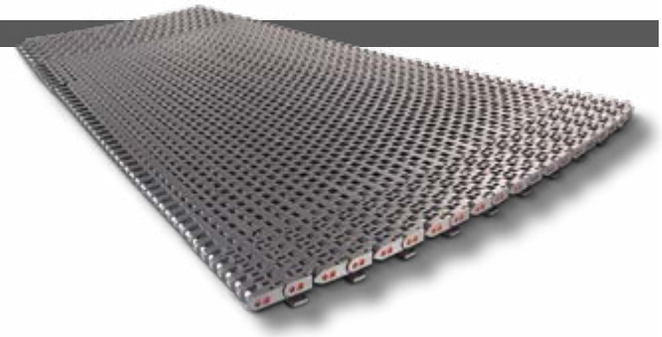

TAB+BEARING
12,7 mm (0.5") THICKNESS
REINFORCED OUTER MODULES
STANDARD SIDEFLEXING RADIUS

For traditional left, right or "**U**" turn conveying.
Average ratio between internal sideflexing radius and width = **1.8.**
Guide system with **one side TAB+ Stainless Steel Bearing (waterproof).**

- Belt widths: from 255 mm (10.04") to 850 mm (33.46") in 85 mm (3.35") increments

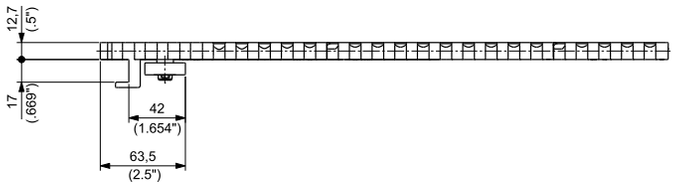

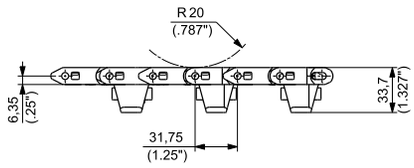

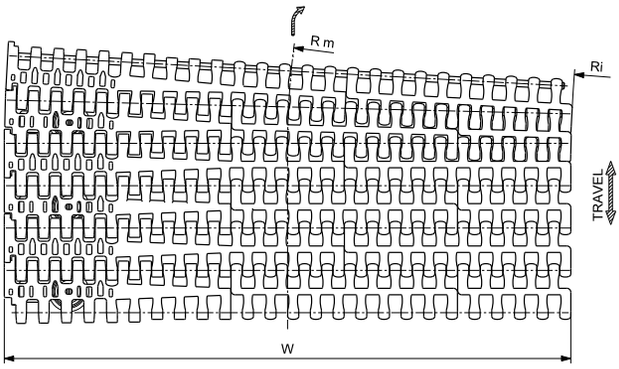

Materials see page 12
Sprockets see pages 257÷258
Corner tracks see page 324
Applications see page 22

MATERIALS		PART NUMBER	WIDTH W		SIDEFLEXING RADIUS				WEIGHT	
					INNER Ri		MEDIUM Rm			
Module	Pin		mm	inch	mm	inch	mm	inch	kg/m	lbs/ft
ULTRA PERFORMANCE HOMOPOLYMER DELRIN ® UP	PBT	**2556HTB-UP0255**	255	10.04	472,5	18.60	600	23.62	3,24	2.18
		2556HTB-UP0340	340	13.39	630,0	24.80	800	31.50	3,97	2.67
		2556HTB-UP0425	425	16.73	787,3	31.00	1000	39.37	4,70	3.16
		2556HTB-UP0510	510	20.08	945,0	37.21	1200	47.24	5,43	3.65
		2556HTB-UP0595	595	23.43	1102,5	43.41	1400	55.12	6,16	4.14
		2556HTB-UP0680	680	26.77	1260,0	49.61	1600	62.99	6,90	4.64
		2556HTB-UP0765	765	30.12	1417,5	55.81	1800	70.87	7,63	5.13
		2556HTB-UP0850	850	33.46	1575,0	62.01	2000	78.74	8,36	5.62

Standard packaging:
Rolls of 1,524 m (5 ft)

Copyright Regina Catene Calibrate s.p.a. - 2020, All rights reserved

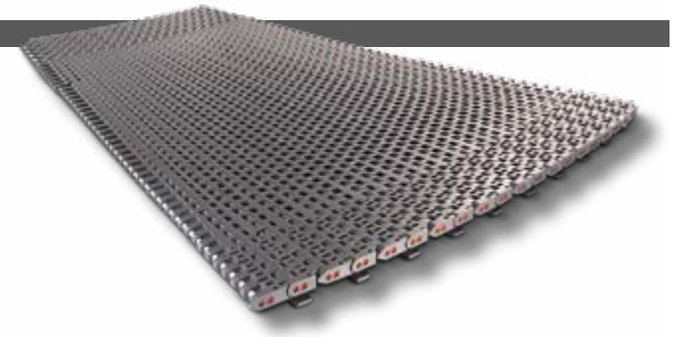

TAB+BEARING
12,7 mm (0.5") THICKNESS
REINFORCED OUTER MODULES
REDUCED SIDEFLEXING RADIUS

For traditional left, right or **"U"** turn conveying.
Average ratio between internal sideflexing radius and width= **1.2**.
Suitable to be used in more compact conveyors, saving flor space.
For **heavy duty** applications with high working load and speed.
Guide system with **one side TAB+Stainless Steel Bearing (waterproof).**

- Belt widths: from 340 mm (13.39") to 850 mm (33.46") in 85 mm (3.35") increments

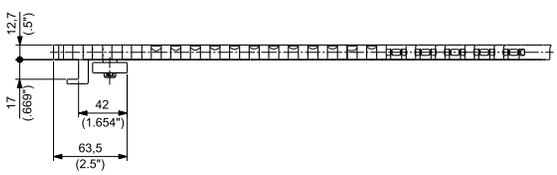

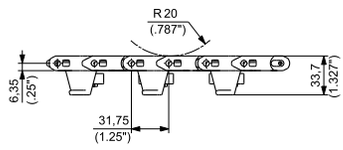

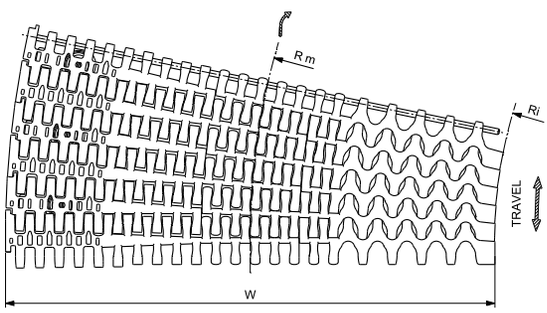

Materials see page 12
Sprockets see pages 257÷258
Corner tracks see page 324
Applications see page 22

MATERIALS		PART NUMBER	WIDTH W		SIDEFLEXING RADIUS				WEIGHT	
					INNER Ri		MEDIUM Rm			
Module	Pin		mm	inch	mm	inch	mm	inch	kg/m	lbs/ft
ULTRA PERFORMANCE HOMOPOLYMER DELRIN ® UP	PBT	**2556HTB-SRUP0340**	340	13.39	330,0	12.99	500	19.69	3,91	2.63
		2556HTB-SRUP0425	425	16.73	387,5	15.26	600	23.62	4,70	3.16
		2556HTB-SRUP0510	510	20.08	545,0	21.46	800	31.50	5,43	3.65
		2556HTB-SRUP0595	595	23.43	702,5	27.66	1000	39.37	6,17	4.15
		2556HTB-SRUP0680	680	26.77	860,0	33.86	1200	47.24	6,90	4.64
		2556HTB-SRUP0765	765	30.12	1017,5	40.06	1400	55.12	7,63	5.13
		2556HTB-SRUP0850	850	33.46	1175,5	46.26	1600	62.99	8,36	5.62

Standard packaging: Rolls of 1,524 m (5 ft)

Copyright Regina Catene Calibrate s.p.a. - 2020, All rights reserved

SUITABLE FOR CHAINS:
- **2556HTB**
- **2556HTB-SR**

MATERIALS		
SPROCKETS:	**PA**	POLYAMIDE

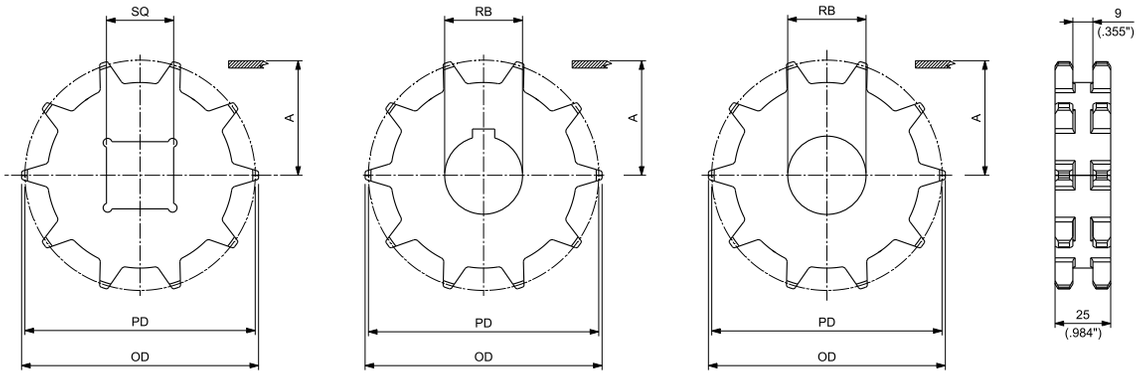

SQUARE BORE - DRIVE/IDLER

ROUND BORE - DRIVE

ROUND BORE - IDLER

MACHINED DOUBLE ROW SOLID DRIVE AND IDLER SPROCKETS

N. TEETH	PITCH DIAMETER PD		OUTSIDE DIAMETER OD		WEAR STRIP POSITIONING A		BORE SIZE**		PART NUMBER SQUARE BORE SQ	PART NUMBER ROUND BORE RB		WEIGHT	
	mm	inch	mm	inch	mm	inch	mm	inch***	DRIVE/IDLER	DRIVE	IDLER	Kg	lbs
8*	82,97	3.267	86,50	3.406	35,14	1.383	30			**MPBAT255508D30**	**MPBAF255508D30**	0,08	0.17
							35			**MPBAT255508D35**	**MPBAF255508D35**	0,07	0.16
								1		**MPBAT255508D254**	**MPBAF255508D254**	0,08	0.19
								1¼		**MPBAT255508D317**	**MPBAF255508D317**	0,08	0.17
10	102,75	4.045	106,50	4.193	45,03	1.773	30			**MPBAT255510D30**	**MPBAF255510D30**	0,15	0.32
							35			**MPBAT255510D35**	**MPBAF255510D35**	0,14	0.31
							40		**MPBAQ255510D40**	**MPBAT255510D40**	**MPBAF255510D40**	0,13	0.29
								1		**MPBAT255510D254**	**MPBAF255510D254**	0,16	0.34
								1¼		**MPBAT255510D317**	**MPBAF255510D317**	0,15	0.32
								1½	**MPBAQ255510D381**	**MPBAT255510D381**	**MPBAF255510D381**	0,14	0.30

*For some shaft dimensions, shaft needs to be properly machined down to avoid interference with the belt tabs. Please contact REGINA Application Engineering for more details.
**In case of round bore, diameter is indicated. In case of square bore, side of the square is indicated.
*** Imperial round bore drive sprockets are supplied with setscrew. Metric round bore drive sprockets are supplied without setscrew.

Copyright Regina Catene Calibrate s.p.a. - 2020, All rights reserved

SUITABLE FOR CHAINS:
- **2556HTB**
- **2556HTB-SR**

MATERIALS		
SPROCKETS:	PA	POLYAMIDE
SCREWS:	SS	STAINLESS STEEL
NUTS:	B	BRASS

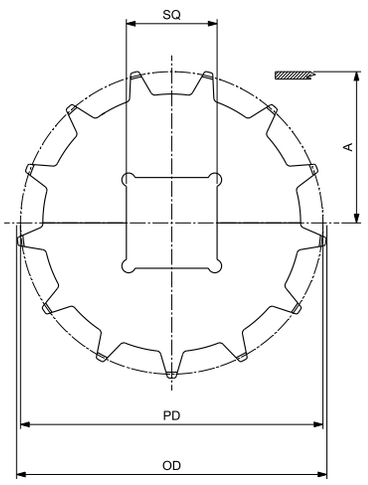

SQUARE BORE - DRIVE/IDLER

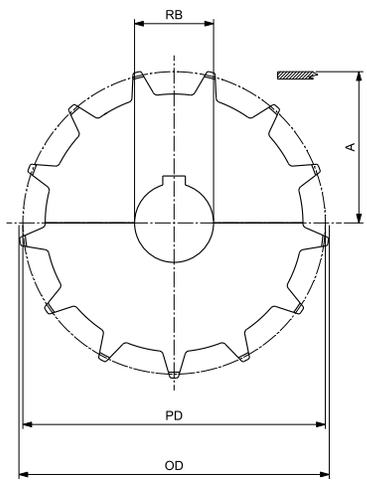

ROUND BORE - DRIVE

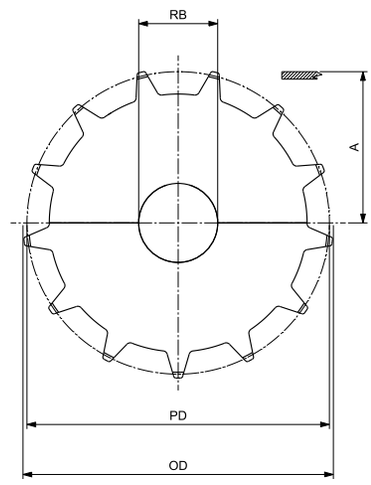

ROUND BORE - IDLER

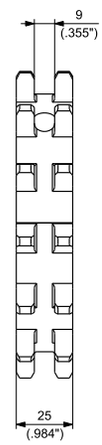

MACHINED DOUBLE ROW SPLIT DRIVE AND IDLER SPROCKETS

N. TEETH	PITCH DIAMETER PD		OUTSIDE DIAMETER OD		WEAR STRIP POSITIONING A		BORE SIZE*		PART NUMBER SQUARE BORE SQ	PART NUMBER ROUND BORE RB		WEIGHT	
	mm	inch	mm	inch	mm	inch	mm	inch**	DRIVE/IDLER	DRIVE	IDLER	Kg	lbs
10	102,75	4.045	106,50	4.193	45,03	1.773	30			**MPBAST255510D30**	**MPBASF255510D30**	0,18	0.40
							35			**MPBAST255510D35**	**MPBASF255510D35**	0,17	0.37
							40		**MPBASQ255510D40**	**MPBAST255510D40**	**MPBASF255510D40**	0,16	0.35
								1		**MPBAST255510D254**	**MPBASF255510D254**	0,19	0.42
								1¼		**MPBAST255510D317**	**MPBASF255510D317**	0,18	0.40
								1½	**MPBASQ255510D381**	**MPBAST255510D381**	**MPBASF255510D381**	0,17	0.37
13	132,67	5.223	137,50	5.413	59,99	2.362	30			**MPBAST255513D30**	**MPBASF255513D30**	0,30	0.66
							35			**MPBAST255513D35**	**MPBASF255513D35**	0,29	0.64
							40		**MPBASQ255513D40**	**MPBAST255513D40**	**MPBASF255513D40**	0,28	0.62
								1		**MPBAST255513D254**	**MPBASF255513D254**	0,30	0.67
								1¼		**MPBAST255513D317**	**MPBASF255513D317**	0,30	0.65
								1½	**MPBASQ255513D381**	**MPBAST255513D381**	**MPBASF255513D381**	0,29	0.63
15	152,71	6.012	158,00	6.220	70,01	2.756	30			**MPBAST255515D30**	**MPBASF255515D30**	0,41	0.91
							35			**MPBAST255515D35**	**MPBASF255515D35**	0,41	0.89
							40		**MPBASQ255515D40**	**MPBAST255515D40**	**MPBASF255515D40**	0,40	0.88
								1		**MPBAST255515D254**	**MPBASF255515D254**	0,42	0.92
								1¼		**MPBAST255515D317**	**MPBASF255515D317**	0,41	0.91
								1½	**MPBASQ255515D381**	**MPBAST255515D381**	**MPBASF255515D381**	0,40	0.88
16	162,75	6.407	168,00	6.614	75,03	2.954	30			**MPBAST255516D30**	**MPBASF255516D30**	0,48	1.05
							35			**MPBAST255516D35**	**MPBASF255516D35**	0,47	1.04
							40		**MPBASQ255516D40**	**MPBAST255516D40**	**MPBASF255516D40**	0,46	1.02
								1		**MPBAST255516D254**	**MPBASF255516D254**	0,48	1.07
								1¼		**MPBAST255516D317**	**MPBASF255516D317**	0,48	1.05
								1½	**MPBASQ255516D381**	**MPBAST255516D381**	**MPBASF255516D381**	0,47	1.03

*In case of round bore, diameter is indicated. In case of square bore, side of the square is indicated.
** Imperial round bore drive sprockets are supplied with setscrew. Metric round bore drive sprockets are supplied without setscrew.

Copyright Regina Catene Calibrate s.p.a. - 2020, All rights reserved

SUITABLE FOR CHAINS:
- **2556HTB-SR**

MATERIALS		
SPROCKETS:	**PA**	POLYAMIDE

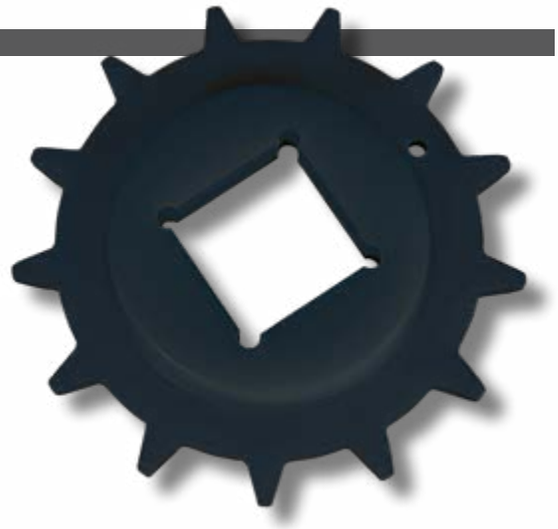

These sprockets are used for 2556HTB-SR belts only.
One drive and one idler sprocket are needed for each belt regardless of its width.
For more information on the correct position of these sprockets please contact REGINA Application Engineers.

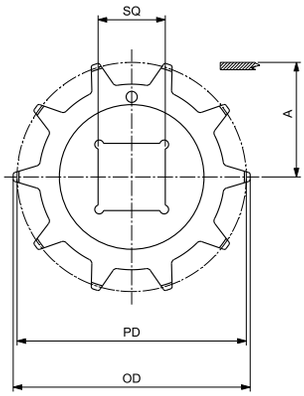

SQUARE BORE - DRIVE/IDLER

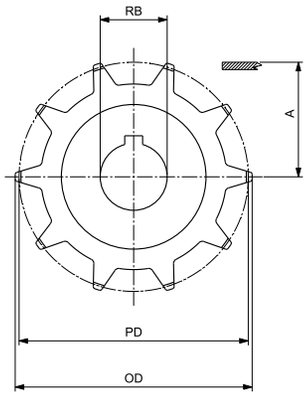

ROUND BORE - DRIVE

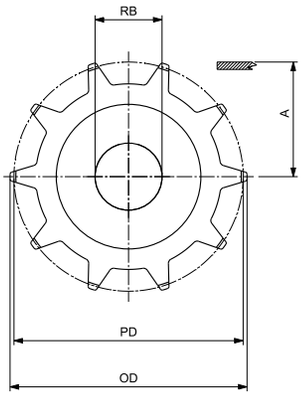

ROUND BORE - IDLER

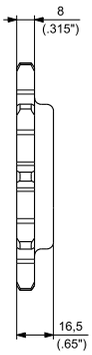

MACHINED SOLID DRIVE AND IDLER SPROCKETS

N. TEETH	PITCH DIAMETER PD		OUTSIDE DIAMETER OD		WEAR STRIP POSITIONING A		BORE SIZE**		PART NUMBER SQUARE BORE SQ DRIVE/IDLER	PART NUMBER ROUND BORE RB DRIVE	PART NUMBER ROUND BORE RB IDLER	WEIGHT	
	mm	inch	mm	inch	mm	inch	mm	inch***				Kg	lbs
8*	82,97	3.267	86,50	3.406	35,14	1.383	35			**MPBAT25550830**	**MPBAF25550830**	0,04	0.09
							40			**MPBAT25550835**	**MPBAF25550835**	0,03	0.08
								1		**MPBAT255508254**	**MPBAF255508254**	0,04	0.10
								1¼		**MPBAT255508317**	**MPBAF255508317**	0,04	0.08
10	102,75	4.045	106,50	4.193	45,03	1.773	30			**MPBAT25551030**	**MPBAF25551030**	0,08	0.17
							35			**MPBAT25551035**	**MPBAF25551035**	0,07	0.16
							40		**MPBAQ25551040**	**MPBAT25551040**	**MPBAF25551040**	0,06	0.14
								1		**MPBAT255510254**	**MPBAF255510254**	0,08	0.18
								1¼		**MPBAT255510317**	**MPBAF255510317**	0,07	0.16
								1½	**MPBAQ255510381**	**MPBAT255510381**	**MPBAF255510381**	0,07	0.15

*For some shaft dimensions, shaft needs to be properly machined down to avoid interference with the belt tabs. Please contact REGINA Application Engineering for more details.
**In case of round bore, diameter is indicated. In case of square bore, side of the square is indicated.
*** Imperial round bore drive sprockets are supplied with setscrew. Metric round bore drive sprockets are supplied without setscrew.

Copyright Regina Catene Calibrate s.p.a. - 2020, All rights reserved

SUITABLE FOR CHAINS:
• 2556HTB-SR

MATERIALS		
SPROCKETS:	PA	POLYAMIDE
SCREWS:	SS	STAINLESS STEEL
NUTS:	B	BRASS

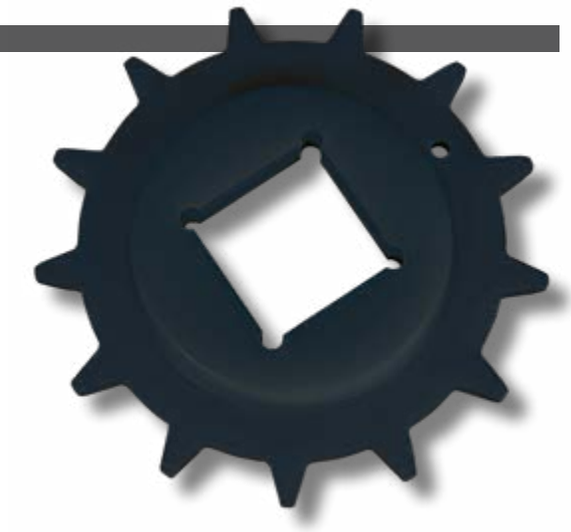

These sprockets are used for 2556HTB-SR belts only.
One drive and one idler sprocket are needed for each belt regardless of its width.
For more information on the correct position of these sprockets please contact REGINA Application Engineers.

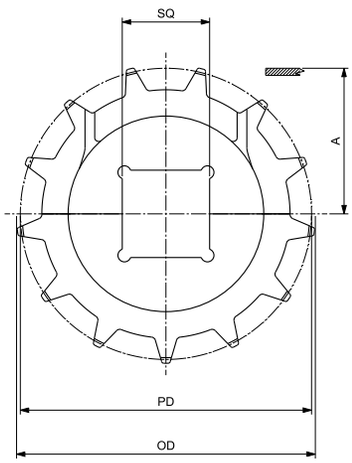

SQUARE BORE - DRIVE/IDLER

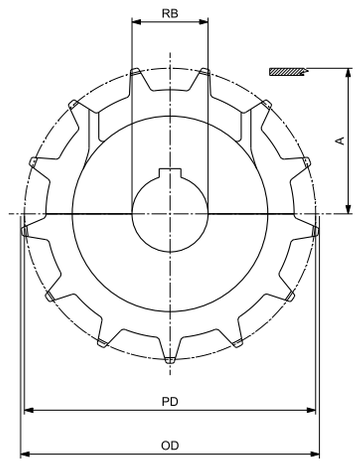

ROUND BORE - DRIVE

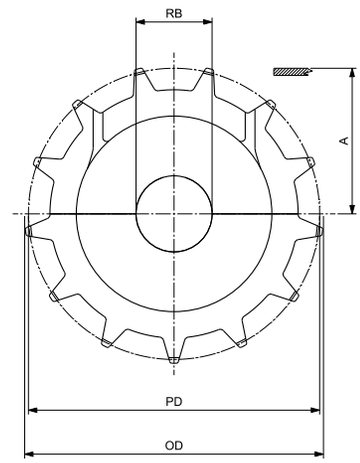

ROUND BORE - IDLER

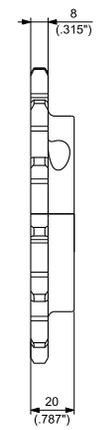

MACHINED SPLIT DRIVE AND IDLER SPROCKETS

N. TEETH	PITCH DIAMETER PD		OUTSIDE DIAMETER OD		WEAR STRIP POSITIONING A		BORE SIZE*		PART NUMBER SQUARE BORE SQ	PART NUMBER ROUND BORE RB		WEIGHT	
	mm	inch	mm	inch	mm	inch	mm	inch**	DRIVE/IDLER	DRIVE	IDLER	Kg	lbs
10	102,75	4.045	106,50	4.193	45,03	1.773	30			MPBAST25551030	MPBASF25551030	0,11	0.24
							35			MPBAST25551035	MPBASF25551035	0,10	0.22
								1		MPBAST255510254	MPBASF255510254	0,12	0.26
								1¼		MPBAST255510317	MPBASF255510317	0,11	0.24
13	132,67	5.223	137,50	5.413	59,99	2.362	30			MPBAST25551330	MPBASF25551330	0,20	0.43
							35			MPBAST25551335	MPBASF25551335	0,19	0.42
							40		MPBASQ25551340	MPBAST25551340	MPBASF25551340	0,18	0.40
								1		MPBAST255513254	MPBASF255513254	0,20	0.44
								1¼		MPBAST255513317	MPBASF255513317	0,19	0.43
								1½	MPBASQ255513381	MPBAST255513381	MPBASF255513381	0,19	0.41
15	152,71	6.012	158,00	6.220	70,01	2.756	30			MPBAST25551530	MPBASF25551530	0,26	0.58
							35			MPBAST25551535	MPBASF25551535	0,26	0.57
							40		MPBASQ25551540	MPBAST25551540	MPBASF25551540	0,25	0.56
								1		MPBAST255515254	MPBASF255515254	0,27	0.59
								1¼		MPBAST255515317	MPBASF255515317	0,26	0.58
								1½	MPBASQ255515381	MPBAST255515381	MPBASF255515381	0,25	0.56
16	162,75	6.407	168,00	6.614	75,03	2.954	30			MPBAST25551630	MPBASF25551630	0,29	0.63
							35			MPBAST25551635	MPBASF25551635	0,28	0.62
							40		MPBASQ25551640	MPBAST25551640	MPBASF25551640	0,27	0.60
								1		MPBAST255516254	MPBASF255516254	0,29	0.64
								1¼		MPBAST255516317	MPBASF255516317	0,28	0.63
								1½	MPBASQ255516381	MPBAST255516381	MPBASF255516381	0,28	0.61

*In case of round bore, diameter is indicated. In case of square bore, side of the square is indicated.
** Imperial round bore drive sprockets are supplied with setscrew. Metric round bore drive sprockets are supplied without setscrew.

Copyright Regina Catene Calibrate s.p.a. - 2020, All rights reserved

SUITABLE FOR CHAINS:
- **2556HTB-SR**

MATERIALS		
SPROCKETS:	PA	POLYAMIDE
SCREWS:	SS	STAINLESS STEEL
INSERTS:	B	BRASS

These supporting wheels are used for 2556HTB-SR belts only in order to support the inner module.
Two supporting wheels are needed (for drive and idler shaft) for each belt regardless of its width.
For more information on the correct position of these sprockets please contact REGINA Application Engineers.

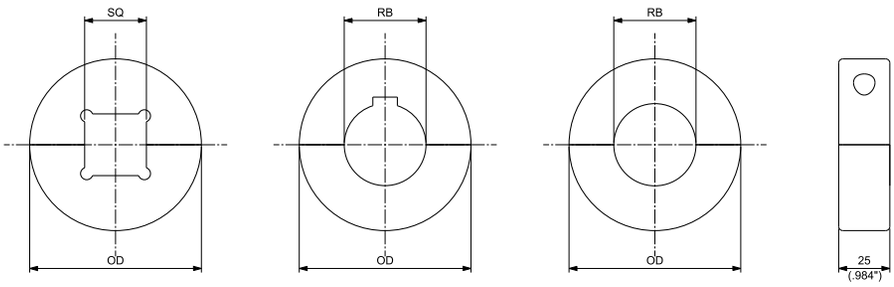

SQUARE BORE - DRIVE/IDLER | ROUND BORE - DRIVE | ROUND BORE - IDLER

MACHINED SPLIT SUPPORTING WHEELS

N. TEETH	OUTSIDE DIAMETER OD		BORE SIZE*		PART NUMBER SQUARE BORE SQ	PART NUMBER ROUND BORE RB		WEIGHT	
	mm	inch	mm	inch	DRIVE/IDLER	DRIVE	IDLER	Kg	lbs
8	63	2.480	30			**CC255001**	**CC255029**	0,08	0.18
			35			**CC255002**	**CC255030**	0,07	0.16
				1		CC255003	CC255031	0,09	0.19
				1¼		CC255004	CC255032	0,08	0.17
10	84	3.307	30			**CC255005**	**CC255033**	0,16	0.35
			35			**CC255006**	**CC255034**	0,15	0.34
			40		**CC255057**	**CC255007**	**CC255035**	0,14	0.32
				1		CC255008	CC255036	0,17	0.37
				1¼		CC255009	CC255037	0,16	0.35
				1½	CC255058	CC255010	CC255038	0,15	0.33
13	115	4.528	30			**CC255011**	**CC255039**	0,30	0.66
			35			**CC255012**	**CC255040**	0,29	0.64
			40		**CC255059**	**CC255013**	**CC255041**	0,28	0.62
				1		CC255014	CC255042	0,30	0.67
				1¼		CC255015	CC255043	0,30	0.65
				1½	CC255060	CC255016	CC255044	0,29	0.63
15	135	5.315	30			**CC255017**	**CC255045**	0,41	0.91
			35			**CC255018**	**CC255046**	0,41	0.89
			40		**CC255061**	**CC255019**	**CC255047**	0,40	0.88
				1		CC255020	CC255048	0,42	0.92
				1¼		CC255021	CC255049	0,41	0.91
				1½	CC255062	CC255022	CC255050	0,40	0.88
16	145	5.709	30			**CC255023**	**CC255051**	0,48	1.05
			35			**CC255024**	**CC255052**	0,47	1.03
			40		**CC255063**	**CC255025**	**CC255053**	0,46	1.01
				1		CC255026	CC255054	0,48	1.06
				1¼		CC255027	CC255055	0,47	1.04
				1½	CC255064	CC255028	CC255056	0,46	1.02

*In case of round bore, diameter is indicated. In case of square bore, side of the square is indicated.

Copyright Regina Catene Calibrate s.p.a. - 2020, All rights reserved

PERFORMANCE IN MOTION

Matveyor®

2″ Pitch Heavy Duty Raised Rib Belts

INDUSTRIES AND APPLICATIONS

Suitable for handling mainly loose products, such as plastic and glass bottles, aluminium & steel cans, in heavy duty applications.

INDUSTRIES

Bottling and canning

Food filling

Container manufacturing

APPLICATIONS

Pasteurizers

Warmers

Coolers

Accumulation tables

FEATURES

- Optimized ratio rib thickness/ribs spacing and special clips design guarantee uniform top surface and high support of the most unstable products such as PET bottles with petaloid bottom.

- Optimum combination open area / mechanical strength allows very good liquid drainage and high product load with long center to center distances.

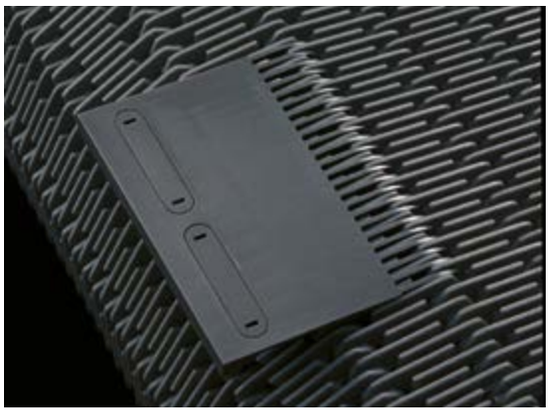

- Clips integrated in the modules for seamless product support at the edges of the belt.

- Contrasting colour of the integrated clip makes it easy to identify the clip itself for safer working conditions.

Copyright Regina Catene Calibrate s.p.a. - 2020, All rights reserved

BELT ASSEMBLY

1) In order to link two belt sections, push the pin in.

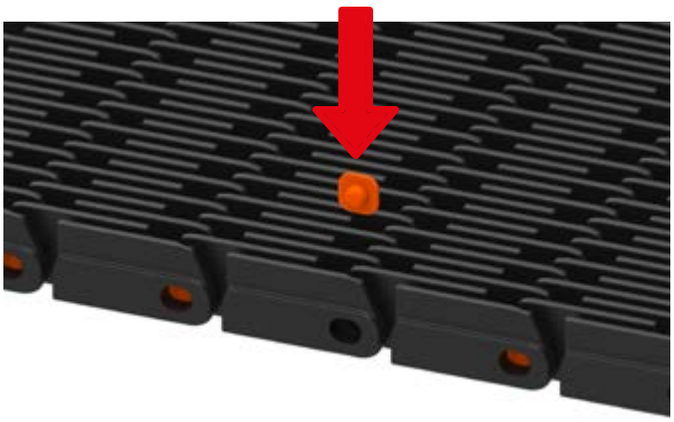

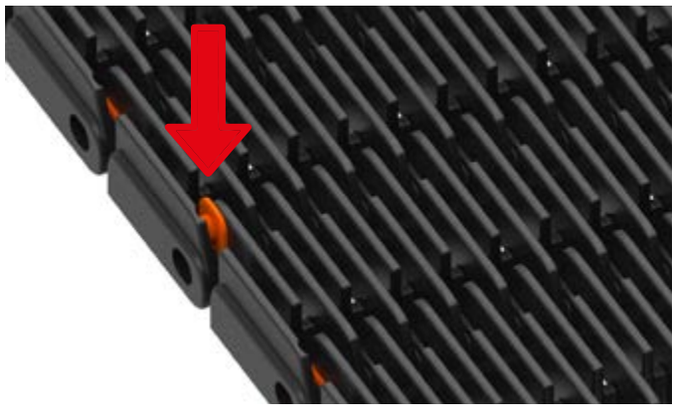

2) Insert the clip into the belt pocket securing it with the help of a screwdriver.

BELT DISASSEMBLY

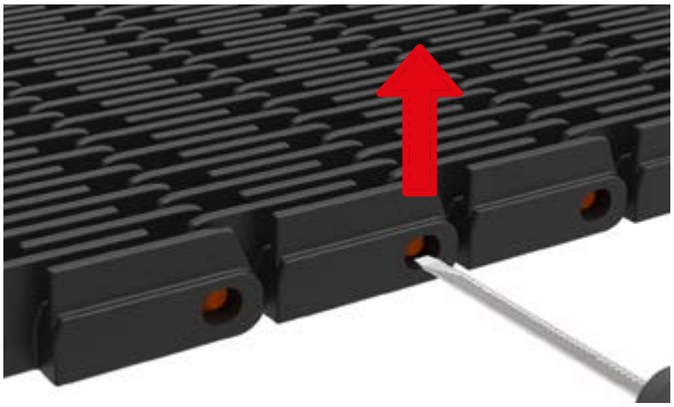

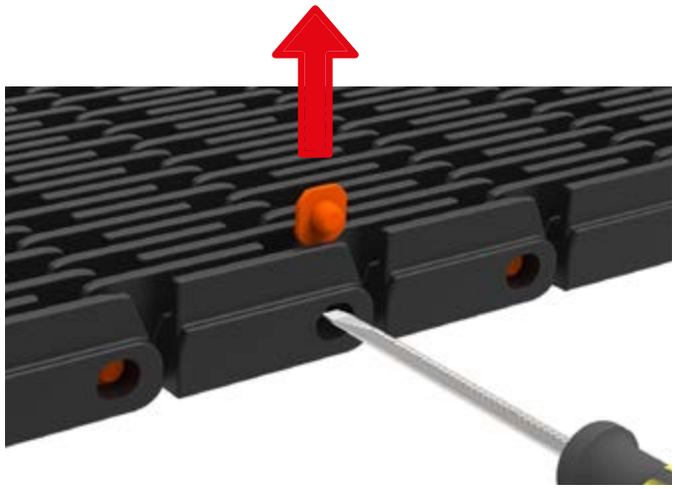

1) Insert a screwdriver into the side hole of the belt and lift the clip.

2) Repeat the same operations on the other side of the belt and then push the plastic pin out using the screwdriver.

Copyright Regina Catene Calibrate s.p.a. - 2020, All rights reserved

14,2 mm (0.580") THICKNESS
RAISED RIB
SEAMLESS PRODUCT SUPPORT AT THE EDGES OF THE BELT

NEW

3125 belt is ideal for pasteurizer applications where the most unstable products such as PET bottles with petaloid bottom have to be conveyed.
The raised rib surface shows no discontinuity between modules both along the belt width and the belt travel direcion, allowing containers to slide accross easily without the risk of product tippage throughout the tunnel pasteurizer.

- **Belt widths:** 304,8 mm (12") or wider in 76,2 mm (3")increments
- **Working Load (at 25°C/77°F):** 24670 N/m (1690 lbs/ft)
- **Belt weight:** 10,76 kg/m^2 (2.20 lbs/ft^2)

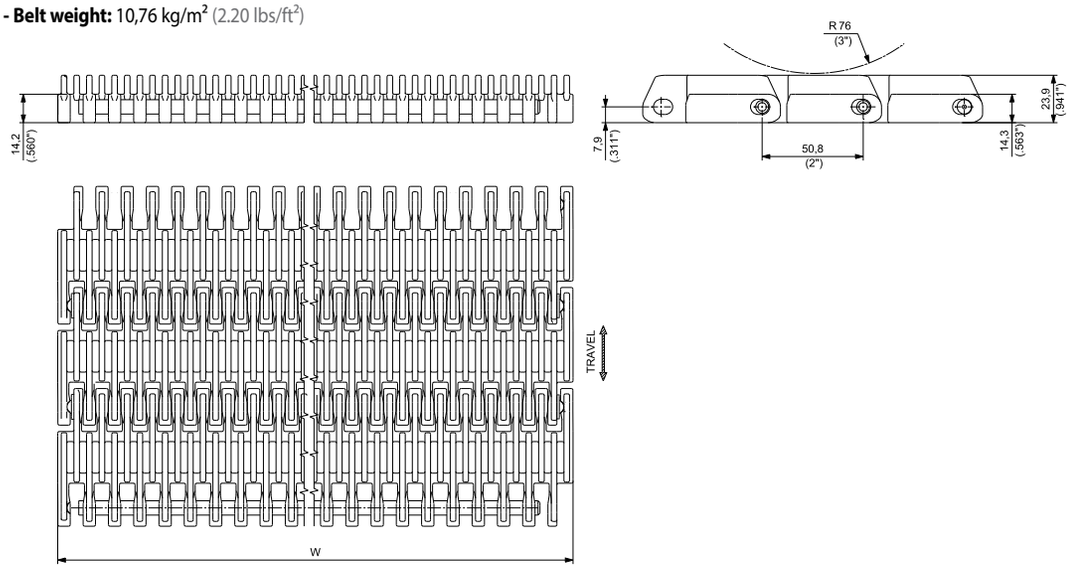

Materials see page 12
Combs see pages 266÷267
Sprockets see pages 268÷269
Applications see page 22

WIDTH W		MATERIALS	
		Module	Pin
		PP SPECIAL POLYPROPYLENE	
mm	inch	PART NUMBER	
304,8	12	**3125PP012**	POLYPROPYLENE
381,0	15	**3125PP015**	
457,2	18	**3125PP018**	
533,4	21	**3125PP021**	
609,6	24	**3125PP024**	
685,8	27	**3125PP027**	
762,0	30	**3125PP030**	
838,2	33	**3125PP033**	
914,4	36	**3125PP036**	
990,6	39	**3125PP039**	
1066,8	42	**3125PP042**	
1143,0	45	**3125PP045**	
1219,2	48	**3125PP048**	
1295,4	51	**3125PP051**	
1371,6	54	**3125PP054**	
1447,8	57	**3125PP057**	
1524,0	60	**3125PP060**	

Belts wider than 1524 mm (60") are available in 76,2 (3") increments.
To identify the Part Numbers, please substitute the last three digits of the PN with the desired width.
Example: for a 63" wide belt (=60+3 inches), the PN is "3125PP063".
On request belts are available in 1.5" (38,1 mm) increments starting from 12" (304,8 mm).
To identify the PN, please add letter "M" to the integer number of the desired width.
Example: 45+1.5=46,5 inches width, the PN is "3125PP046M".

Standard packaging:
Belts are supplied in the length requested by the customer.

Copyright Regina Catene Calibrate s.p.a. - 2020, All rights reserved

TRANSFER COMBS

Combs are supplied complete with slot covers but without fastening screws.
Two fastening screws are required for each comb.
They can be ordered using P/N 16300005.
Special note: the comb fastening screws for 3125 belts are not interchangeable with fastening screws for 1110 belts.

MATERIALS		
COMBS:	DG	ACETAL RESIN
SCREWS*:	SS	STAINLESS STEEL

*Screws are not included in the combs.

LONG FINGER COMB

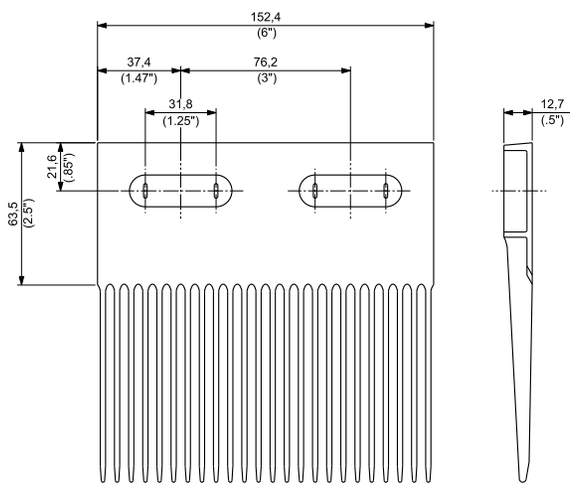

PART NUMBER **TC3000-01**

LONG FINGER COMB

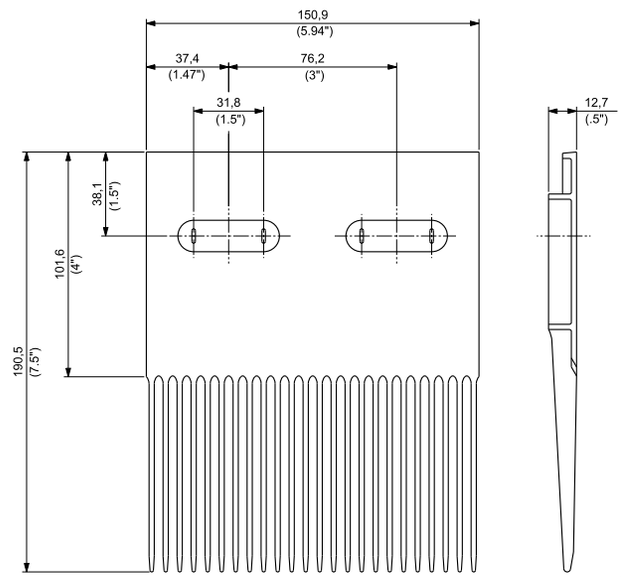

PART NUMBER **TC3000-02**

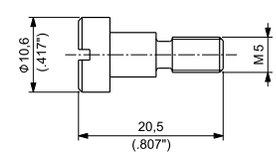

PART NUMBER **16300005**

SHORT FINGER COMB

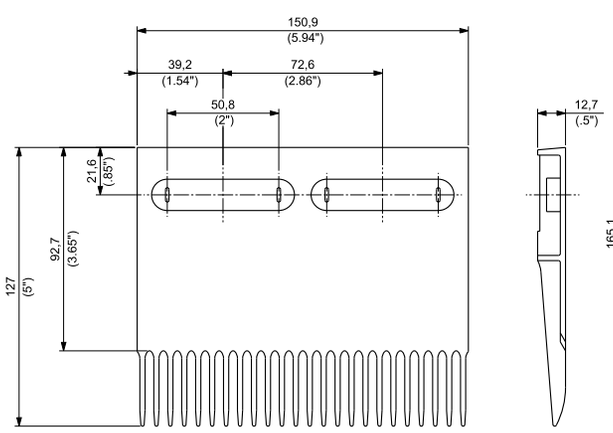

PART NUMBER **TC3000-03**

SHORT FINGER COMB

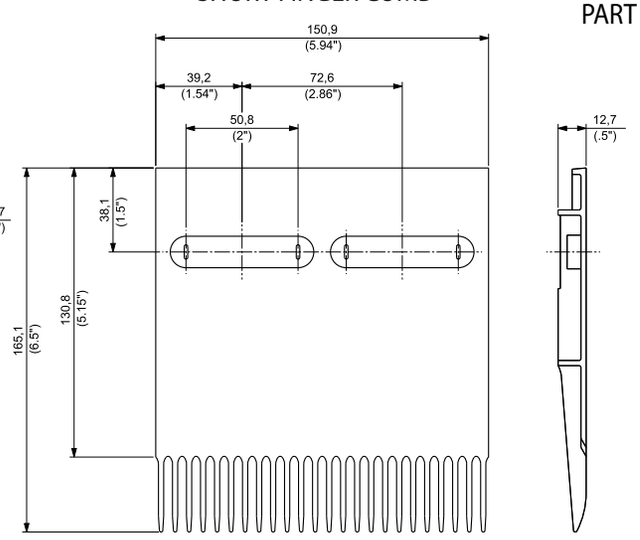

PART NUMBER **TC3000-04**

Copyright Regina Catene Calibrate s.p.a. - 2020, All rights reserved

TRANSFER COMBS

Combs are supplied complete with slot covers, bushings
and fastening screws type hex socket button head ¼" x ⁵/₈" UNI-ISO 7380.

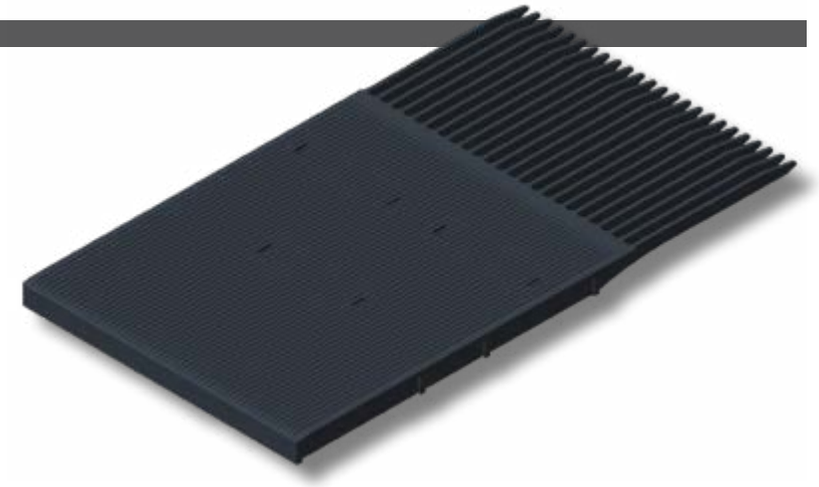

MATERIALS		
COMBS:	DG	ACETAL RESIN
SCREWS:	SS	STAINLESS STEEL

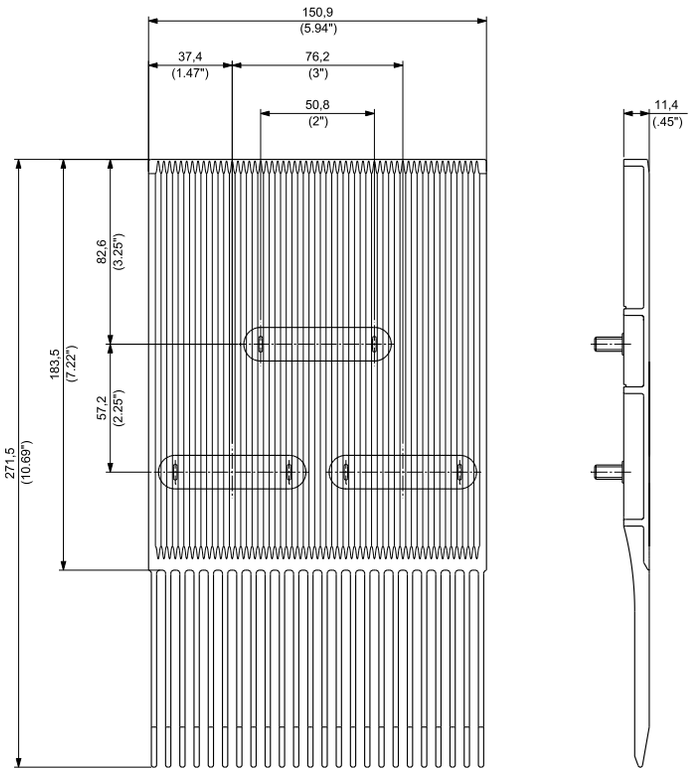

PART NUMBER **TC3000-05**

Copyright Regina Catene Calibrate s.p.a. - 2020, All rights reserved

SUITABLE FOR CHAINS:

- **3125**

MATERIALS	
SPROCKETS:	WA ACETAL RESIN

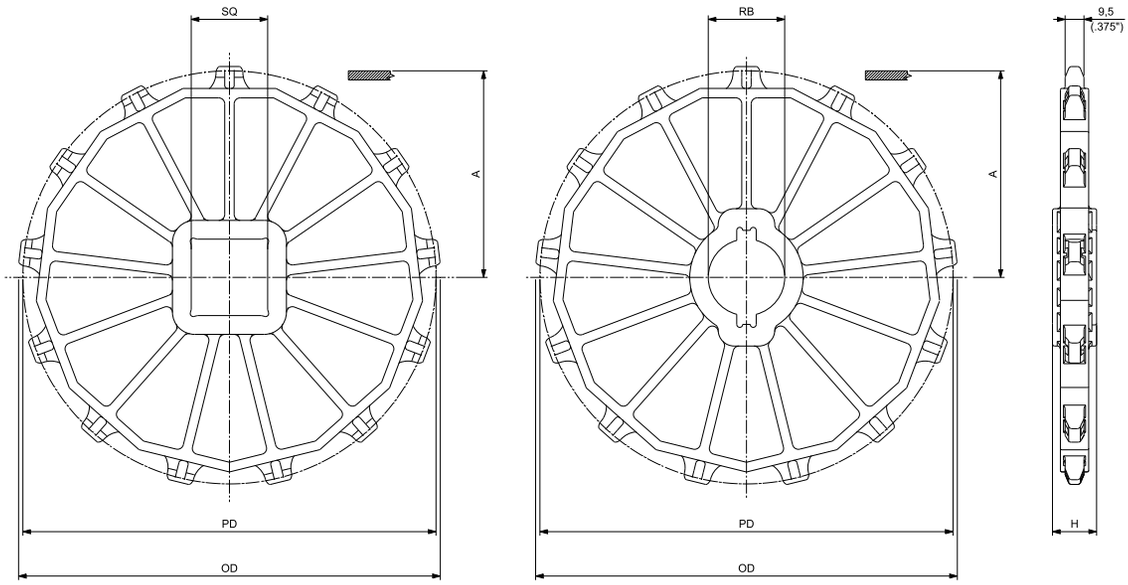

SQUARE BORE - DRIVE/IDLER

ROUND BORE - DRIVE

MOULDED SOLID DRIVE AND IDLER SPROCKETS

N. TEETH	PITCH DIAMETER PD		OUTSIDE DIAMETER OD		WEAR STRIP POSITIONING A		BORE SIZE*		PART NUMBER SQUARE BORE SQ DRIVE/IDLER	PART NUMBER ROUND BORE RB DRIVE	HUB WIDTH H		WEIGHT	
	mm	inch	mm	inch	mm	inch	mm	inch			mm	inch	Kg	lbs
10	164,39	6.472	162,60	6.402	74,30	2.925	40		**19200026**	**19200038**	22,20	0.874	0,20	0.44
							50			**19200036**	22,20	0.874	0,21	0.46
							60		**19200024**		47,60	1.874	0,29	0.64
							65		**19200027**		47,60	1.874	0,25	0.55
								1½	**19200016**	**19200009**	22,20	0.874	0,19	0.43
								2	**19200017**	**19200010**	22,20	0.874	0,23	0.51
								2½	**19200018**		47,60	1.874	0,27	0.59
13	212,27	8.357	212,30	8.358	98,20	3.866	40		**19200025**		22,20	0.874	0,33	0.74
							60		**19200037**		47,60	1.874	0,44	0.97
							65			**19200033**	22,20	0.874	0,32	0.71
							65		**19200030**	**19200053**	47,60	1.874	0,39	0.86
							90		**19200031**	**19200045**	47,60	1.874	0,41	0.91
								1½	**19200019**	**19200001**	47,60	1.874	0,34	0.75
								2½		**19200011**	22,20	0.874	0,41	0.90
								2½	**19200020**		47,60	1.874	0,45	0.99
								3½	**19200021**	**19200046**	22,20	0.874	0,43	0.94
16	260,40	10.252	261,60	10.299	122,26	4.813	65		**19200034**		47,60	1.874	0,50	1.11
							90		**19200035**	**19200054**	47,60	1.874	0,54	1.19
							120		**19200038**		47,60	1.874	0,52	1.15
								2½	**19200014**	**19200050**	47,60	1.874	0,52	1.15
								3½	**19200015**	**19200051**	47,60	1.874	0,54	1.19

*In case of round bore, diameter is indicated. In case of square bore, side of the square is indicated.

Copyright Regina Catene Calibrate s.p.a. - 2020, All rights reserved

SUITABLE FOR CHAINS:

- **3125**

MATERIALS		
SPROCKETS:	WA	ACETAL RESIN
SCREWS:	SS	STAINLESS STEEL
NUTS:	SS	STAINLESS STEEL

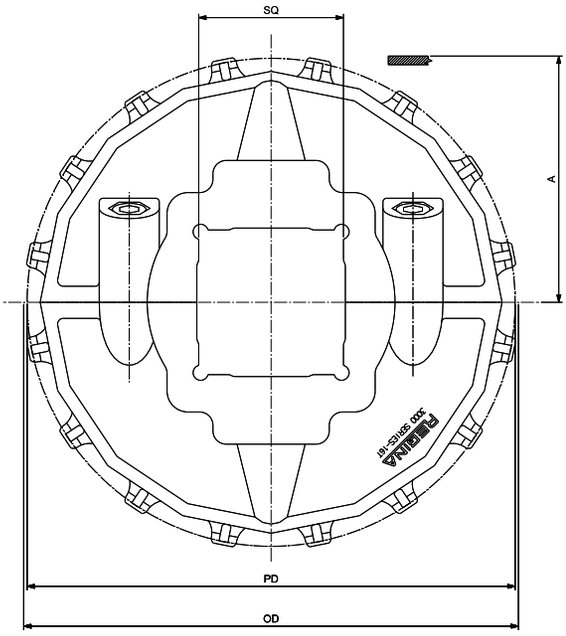

SQUARE BORE - DRIVE/IDLER

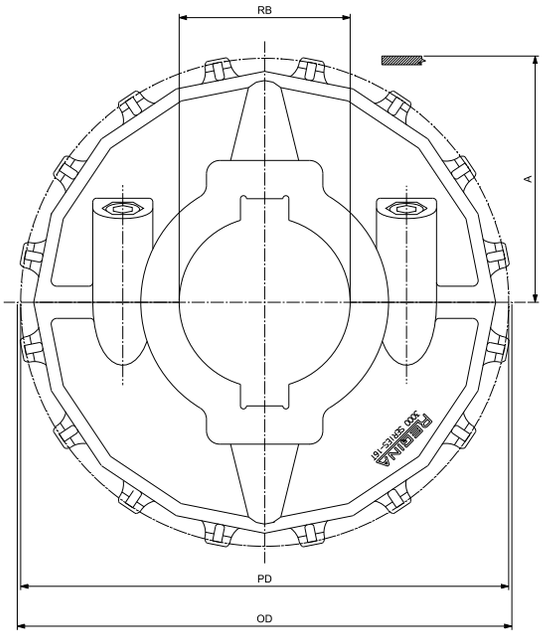

ROUND BORE - DRIVE

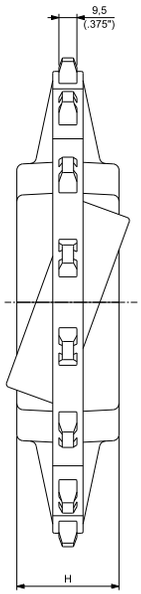

MOULDED SPLIT DRIVE AND IDLER SPROCKETS

N. TEETH	PITCH DIAMETER PD		OUTSIDE DIAMETER OD		WEAR STRIP POSITIONING A		BORE SIZE*		PART NUMBER SQUARE BORE SQ DRIVE/IDLER	PART NUMBER ROUND BORE RB DRIVE	HUB WIDTH H		WEIGHT	
	mm	inch	mm	inch	mm	inch	mm	inch			mm	inch	Kg	lbs
16	260,40	10.252	261,40	10.291	122,26	4.813	65		**19200111W**	**19200109W**	54,00	2.126	1,85	4.08
							90		**19200114W**	**19200112W**	54,00	2.126	1,56	3.44
								2½	**19200105W**	**19200103W**	54,00	2.126	1,86	4.10
								3½	**19200108W**	**19200106W**	54,00	2.126	1,57	3.45

*In case of round bore, diameter is indicated. In case of square bore, side of the square is indicated.

Copyright Regina Catene Calibrate s.p.a. - 2020, All rights reserved

PERFORMANCE IN MOTION

ULTOP®

1½" Pitch Heavy Duty UCC Chains

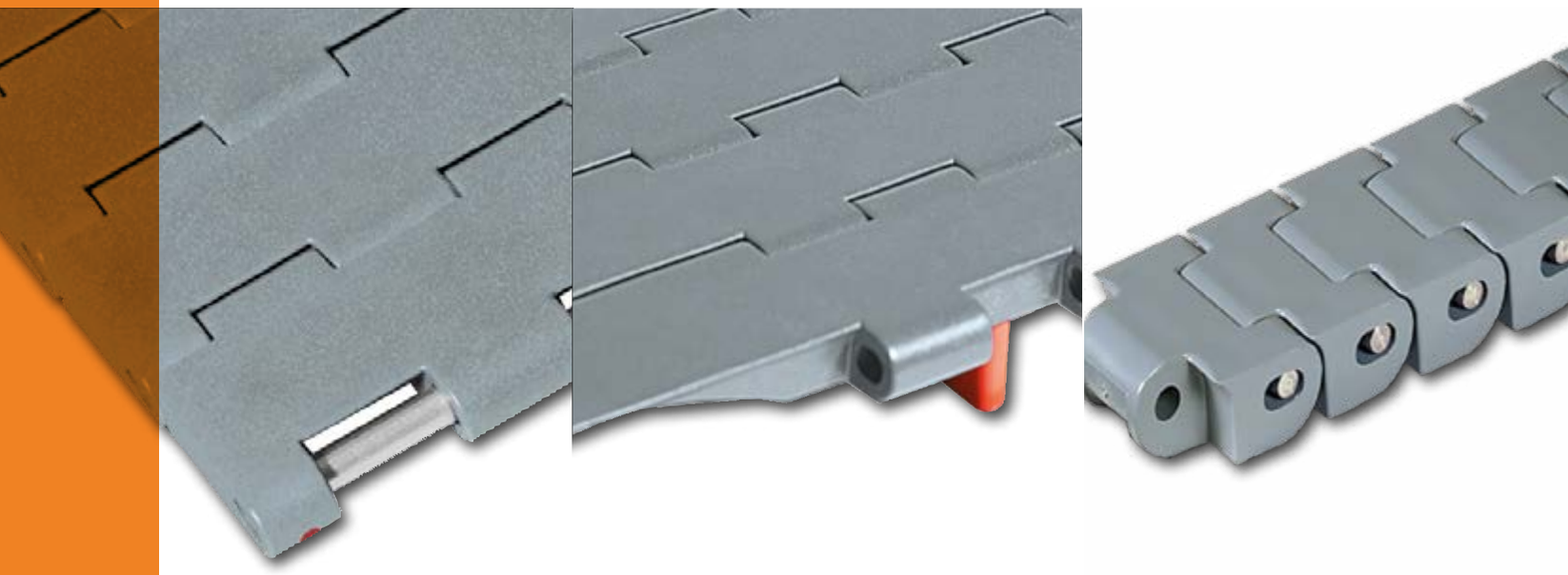

INDUSTRIES AND APPLICATIONS

Suitable for handling loose & packaged products, such as plastic & glass bottles and aluminium & steel cans, in heavy duty applications.

INDUSTRIES

Bottling and canning

Food filling

Container manufacturing
(in particular glass bottles)

Consumer goods

APPLICATIONS

Depalletizer

Pressureless Inliners and Combiners

Single lane and Mass conveyors

Case conveyors

FEATURES

- Optimized edge profile combinated with completely closed surface, with no gaps even when engaging the sprockets, allow smooth side transfer of products, even in presence of different thicknesses due to normal wear.

- Chains equipped with stainless steel pins for the maximum mechanical and wear resistance.

- Retention special clip (Snapsert™) can be easily moved from either side allowing easy chain assembly and disassembly.

Copyright Regina Catene Calibrate s.p.a. - 2020, All rights reserved

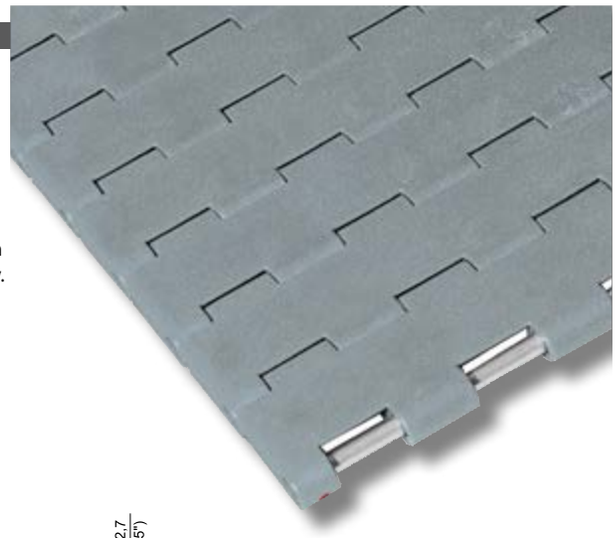

12,7 mm (0.5") THICKNESS
SOLID TOP

Stainless steel pins for ideal performance in heavy duty applications.
A complete range of dedicated width chains. Completely closed surface, no gap between the modules, even with engaging in the sprockets. Particularly suitable for glass bottling lines and glass manufacturing industry.

DUPONT® KEVLAR® INSIDE

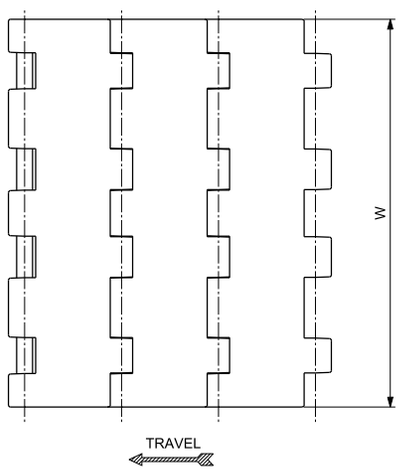

Materials see page 12
Sprockets see page 275
Applications see page 22

MATERIALS Plate	MATERIALS Pin	ITEM DESCRIPTION	PART NUMBER	WIDTH W mm	WIDTH W inch	PLATE THICKNESS mm	PLATE THICKNESS inch	WORKING LOAD (25°C/77°F) N	WORKING LOAD (25°C/77°F) lbs	WEIGHT kg/m	WEIGHT lbs/ft
ULTRA LOW FRICTION POLYESTER RESIN ULF	AUSTENITIC STAINLESS STEEL	UCC 325 SS	**66100111**	82,6	3.25	12,7	0.5	2505	563	1,26	0.85
		UCC 450 SS	**66100141**	114,3	4.50	12,7	0.5	3469	780	1,74	1.17
		UCC 600 SS	**66100161**	152,4	6.00	12,7	0.5	4625	1040	2,32	1.56
		UCC 750 SS	**66100151**	190,5	7.50	12,7	0.5	5781	1300	2,93	1.97
		UCC 1200 SS	**66100191**	304,8	12.00	12,7	0.5	9270	2061	4,64	3.12
		UCC 1500 SS	**66100181**	381,0	15.00	12,7	0.5	11590	2605	5,81	3.90
		UCC 1800 SS	**66100221**	457,2	18.00	12,7	0.5	13900	3125	6,97	4.69
		UCC 2400 SS	**66100231**	609,6	24.00	12,7	0.5	18540	4168	9,27	6.23
SPECIAL DELRIN ® REINFORCED WITH KEVLAR ® DK2™		D2K UCC 325 SS	**D2K66100111**	82,6	3.25	12,7	0.5	2505	563	1,33	0.89
		D2K UCC 450 SS	**D2K66100141**	114,3	4.50	12,7	0.5	3469	780	1,83	1.23
		D2K UCC 600 SS	**D2K66100161**	152,4	6.00	12,7	0.5	4625	1040	2,43	1.64
		D2K UCC 750 SS	**D2K66100151**	190,5	7.50	12,7	0.5	5781	1300	3,07	2.06
		D2K UCC 1200 SS	**D2K66100191**	304,8	12.00	12,7	0.5	9270	2061	4,88	3.28
		D2K UCC 1500 SS	**D2K66100181**	381,0	15.00	12,7	0.5	11590	2605	6,10	4.10
		D2K UCC 1800 SS	**D2K66100221**	457,2	18.00	12,7	0.5	13900	3125	7,32	4.92
		D2K UCC 2400 SS	**D2K66100231**	609,6	24.00	12,7	0.5	18540	4168	9,73	6.54

Standard packaging:
Rolls of 3,048 m (10 feet)

Copyright Regina Catene Calibrate s.p.a. - 2020, All rights reserved

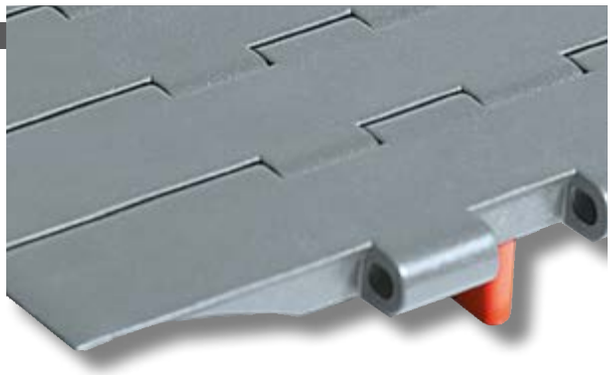

ACTIVE TRANSFER MODULES
12,7 mm (0.5") THICKNESS
SOLID TOP

Active transfer modules UCCG ATM allow transfer of products between two 90° conveyor tracks without using dead plares. The special wing shaped module profile supports the products dynamically during transfer on the take-away belt.

DUPONT® KEVLAR® INSIDE

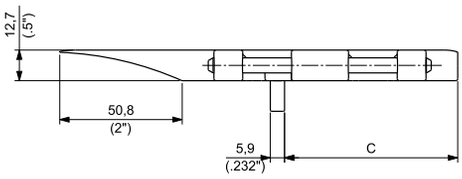

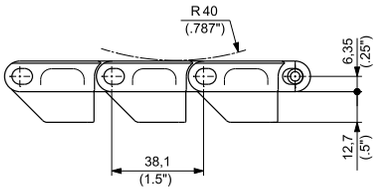

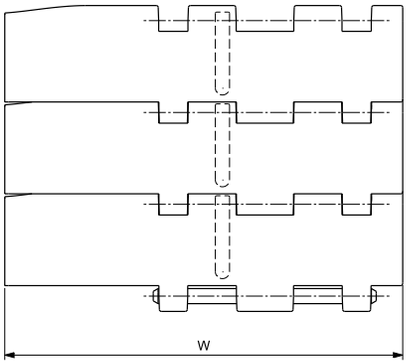

Materials see page 12
Sprockets see page 275
Applications see page 22

MATERIALS Plate	MATERIALS Pin	ITEM DESCRIPTION	PART NUMBER	WIDTH W mm	WIDTH W inch	PLATE THICKNESS mm	PLATE THICKNESS inch	TRACKING GUIDE POSITION C mm	TRACKING GUIDE POSITION C inch	WORKING LOAD (25°C/77°F) N	WORKING LOAD (25°C/77°F) lbs	WEIGHT kg/m	WEIGHT lbs/ft
ULTRA LOW FRICTION POLYESTER RESIN ULF	AUSTENITIC STAINLESS STEEL	UCCGATM 450 SS	66100331	165,1	6.50	12,7	0.5	71,4	2.81	3469	780	2,11	1.41
		UCCGATM 750 SS	66100341	241,3	9.50	12,7	0.5	139,5	5.49	5781	1.300	3,26	2.19
SPECIAL DELRIN ® REINFORCED WITH KEVLAR ®		UCCGATM D2K 450 SS	D2K66100331	165,1	6.50	12,7	0.5	71,4	2.81	3469	780	2,22	1.49
		UCCGATM D2K 750 SS	D2K66100341	241,3	9.50	12,7	0.5	139,5	5.49	5781	780	3,43	2.31

Standard packaging:
Rolls of 3,048 m (10 feet)

ULTOP®

Copyright Regina Catene Calibrate s.p.a. - 2020, All rights reserved

15 mm (0.591") THICKNESS
SOLID TOP

Optimum support of the conveyed products, no risk for flight detachment (compared to two piece chains).
No gap between the plates even when engaging the sprockets.
Particularly suitable for packaging machines applications.

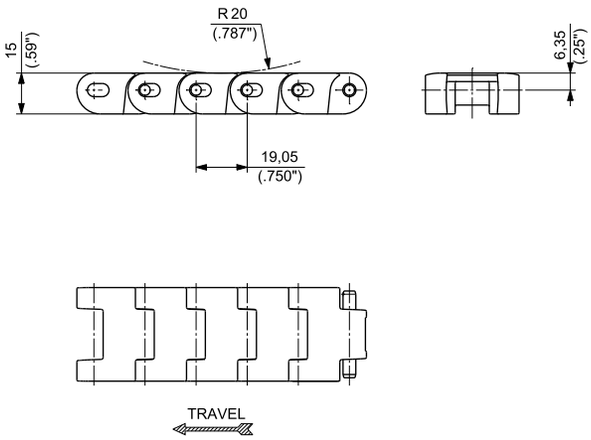

Materials see page 12
Sprockets see page 276
Applications see page 22

MATERIALS		ITEM DESCRIPTION	PART NUMBER	WIDTH W		PLATE THICKNESS		WORKING LOAD (25°C/77°F)		WEIGHT	
Plate	Pin			mm	inch	mm	inch	N	lbs	kg/m	lbs/ft
ULTRA LOW FRICTION POLYESTER RESIN ULF	AUSTENITIC STAINLESS STEEL	UCC 138 SS	66100321	34,92	1.37	15	0.591	1225	275	0,68	0.46

Standard packaging: Rolls of 3,048 m (10 feet)

Copyright Regina Catene Calibrate s.p.a. - 2020, All rights reserved

SUITABLE FOR CHAINS:
- **UCC**

MATERIALS		
SPROCKETS:	PGF	REINFORCED POLYAMIDE
SCREW:	SS	STAINLESS STEEL
NUTS:	S+ZN	ZINC PLATED STEEL

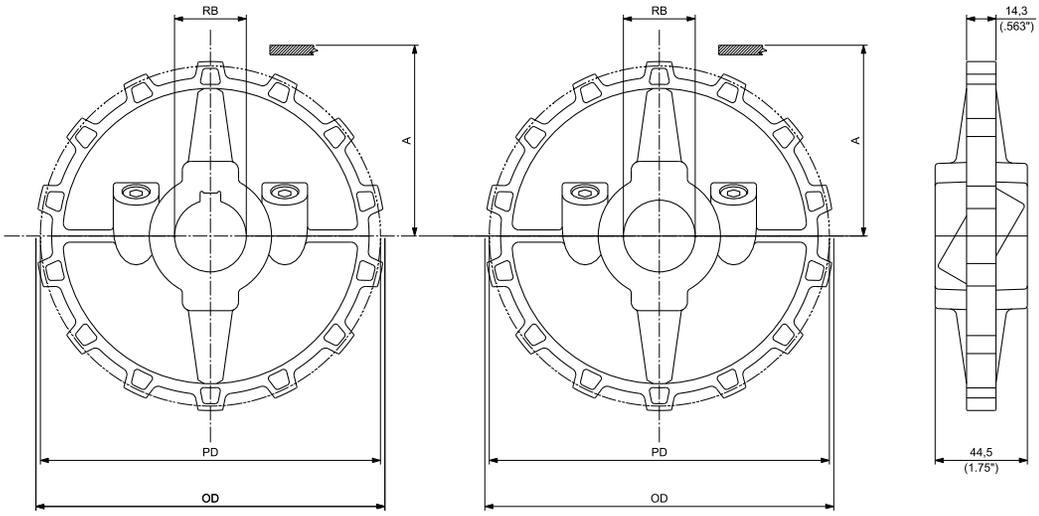

ROUND BORE - DRIVE

ROUND BORE - IDLER

MOULDED SPLIT DRIVE AND IDLER SPROCKETS

N. TEETH	PITCH DIAMETER PD		OUTSIDE DIAMETER OD		WEAR STRIP POSITIONING A		BORE SIZE*		PART NUMBER ROUND BORE RB		WEIGHT	
	mm	inch	mm	inch	mm	inch	mm	inch**	DRIVE	IDLER	Kg	lbs
							30		**UCCST1230**	**UCCSF1230**	0,36	0.80
							35		**UCCST1235**	**UCCSF1235**	0,35	0.77
							40		**UCCST1240**	**UCCSF1240**	0,34	0.75
								1	UCCST12254	UCCSF12254	0,37	0.82
12	147,21	5.796	146,80	5.780	67,30	2.650		1 3/16	UCCST12301	UCCSF12301	0,36	0.79
								1 1/4	UCCST12317	UCCSF12317	0,36	0.79
								1 3/8	UCCST12349	UCCSF12349	0,34	0.76
								1 7/16	UCCST12365	UCCSF12365	0,35	0.76
								1 1/2	UCCST12381	UCCSF12381	0,34	0.76
							30		**UCCST1430**	**UCCSF1430**	0,44	0.97
							35		**UCCST1435**	**UCCSF1435**	0,43	0.95
							40		**UCCST1440**	**UCCSF1440**	0,42	0.92
								1	UCCST14254	UCCSF14254	0,44	0.98
14	171,22	6.741	170,20	6.701	79,30	3.122		1 3/16	UCCST14301	UCCSF14301	0,44	0.96
								1 1/4	UCCST14317	UCCSF14317	0,46	1.01
								1 3/8	UCCST14349	UCCSF14349	0,43	0.94
								1 7/16	UCCST14365	UCCSF14365	0,43	0.94
								1 1/2	UCCST14381	UCCSF14381	0,43	0.94

*Diameter is indicated.
** Imperial round bore drive sprockets are supplied with setscrew. Metric round bore drive sprockets are supplied without setscrew.

Copyright Regina Catene Calibrate s.p.a. - 2020, All rights reserved

SUITABLE FOR CHAINS:
- **UCC138**

MATERIALS

SPROCKETS: S CARBON STEEL

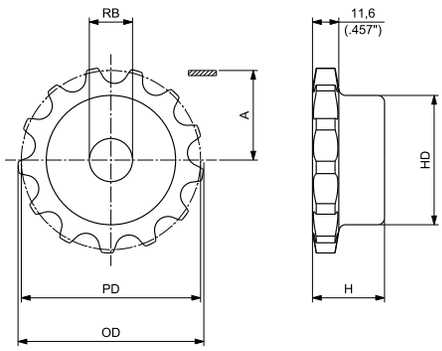

MACHINED SOLID SPROCKETS

N. TEETH	PITCH DIAMETER PD		OUTSIDE DIAMETER OD		WEAR STRIP POSITIONING A		HD		H		BORE SIZE*		PART NUMBER ROUND BORE RB	WEIGHT	
	mm	inch	mm	inch	mm	inch	mm	inch	mm	inch	mm	inch		Kg	lbs
9	55,70	2.193	56,9	2.24	19,20	0.756	32	1.26	30	1.18	12	0.47	**CMA021380900**	0,31	0.68
11	67,62	2.662	69,5	2.74	25,15	0.990	45	1.77	35	1.38	14	0.55	**CMA021381100**	0,57	1.26
13	79,60	3.134	81,9	3.22	31,15	1.226	57	2.24	35	1.38	14	0.55	**CMA021381300**	0,87	1.92
15	91,63	3.607	94,2	3.71	37,17	1.463	69	2.72	35	1.38	14	0.55	**CMA021381500**	1,24	2.74
17	103,67	4.081	106,5	4.19	43,19	1.700	80	3.15	35	1.38	16	0.63	**CMA021381700**	1,63	3.60
19	115,74	4.557	118,8	4.68	49,22	1.938	80	3.15	35	1.38	16	0.63	**CMA021381900**	1,82	4.01
21	127,82	5.032	131,0	5.16	55,26	2.176	90	3.54	40	1.57	20	0.79	**CMA021382100**	2,48	5.47
23	139,90	5.508	143,2	5.64	61,30	2.413	90	3.54	40	1.57	20	0.79	**CMA021382300**	2,71	5.98
25	152,00	5.984	155,4	6.12	67,35	2.652	90	3.54	40	1.57	20	0.79	**CMA021382500**	2,97	6.55

*Diameter is indicated (plain bore).

Copyright Regina Catene Calibrate s.p.a. - 2020, All rights reserved

REGINA CHAIN

PERFORMANCE IN MOTION

FliteTop® Matveyor®

Magnetic Curves

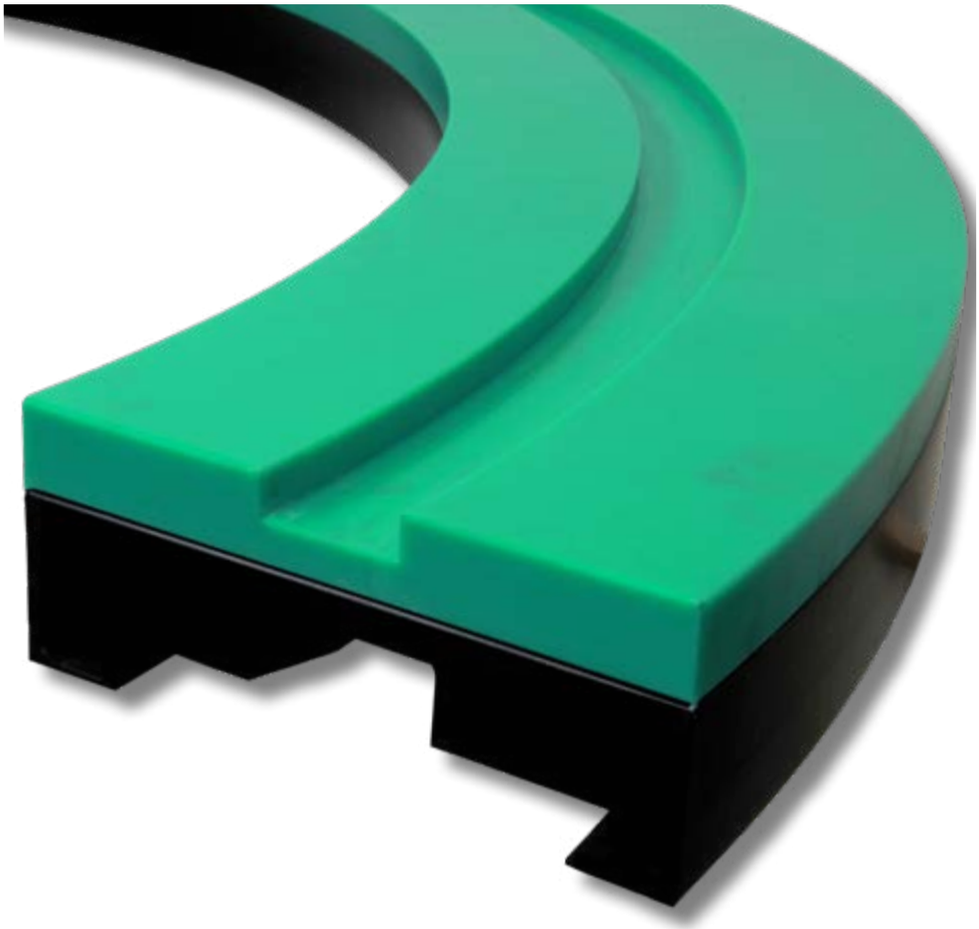

MAGNETIC CURVES

Magnetic curves are a combined system for both steel and plastic chains.
Two magnets, integrated underneath the track and connected by a steel plate, creating a strong magnetic field that results in an even force keeping down steel chains as well as plastic chains with steel pins running in the curve.
The position of the magnets has been carefully studied in order to get the ideal distribution of the magnetic field, with the following results:

- No chain pulsation effect when the chain is being pulled through the curve.
- Chains perfectly flat in curve without tilting

The REGINA magnetic curve consists of mainly N. 3 parts:

1. Machined upper plastic part of the curve, normally supplied with the standard SUPREME-A material which is a virgin UHMWPE (about 7 milions gr/mole) with an optimum wear resistance.
2. Machined return part of the curve, supplied in UHMWPE material with 4 millions gr/mole which is suitable even for the most demanding applications. This part is jointed to the upper part by stainless steel self-tapping screws.
3. Return guide shoe, made in in UHMWPE material with 4 millions gr/mole, to bring the chain at the right height to enter the return part of the curve.

For special applications involving very high speeds and reduced lubrication conditions new e-SLIDE and SUPREME-S materials can be used to guarantee higher PV (Pressure-Velocity) loads according to the application needs.

CURVE MATERIAL	FEATURES	CHAIN TYPE	APPLICATIONS
SUPREME -A STANDARD MATERIAL	Ultra high molecular weight polyethylene (about 7 million gr/mole) with good wear resistance and low coefficient of friction.	For steel and plastic chains.	Ideal in low/medium speed applications in dry or lubricated conditions.
NEW e-SLIDE	New ultimate Ultra High Molecular Weight Polyethylene (molecular density of 9.000.000 g/mol). Thanks to special lube additives compounded with the material, provides superior sliding performance and excellent wear resistance of chains and belts in high-speeds and dry running application.	For steel and plastic chains.	Suitable in high speed applications in dry or reduced lubricated conditions.
SUPREME -S	Special high grade and oil-filled polyamide with superior abrasion resistance and extremely high PV limit. Dry running only.	For plastic chains.	Suitable in high speed applications in dry running conditions.

e-SLIDE FEATURES AND BENEFITS

COF between chain and wearstrips/curves

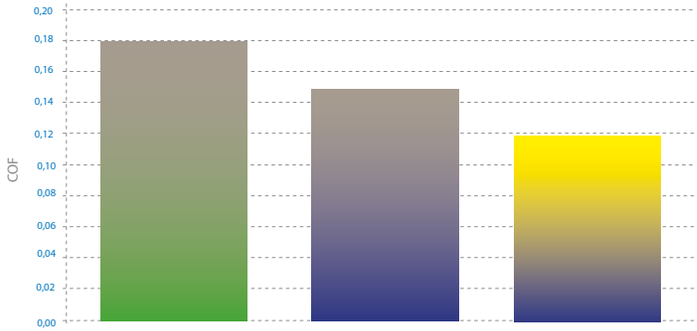

- UP chain + UHMWPE wearstrips/curves
- UP chain + e-SLIDE wearstrips/curves
- e-F.A.S.T. chain + e-SLIDE wearstrips/curves

Chain pull trend in a sideflexing conveyor system

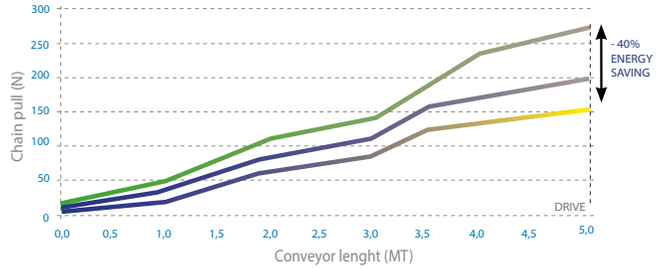

- UP chain + UHMWPE wearstrips/curves
- UP chain + e-SLIDE wearstrips/curves
- e-F.A.S.T. chain + e-SLIDE wearstrips/curves

Copyright Regina Catene Calibrate s.p.a. - 2020, All rights reserved

SUPPLY INFORMATIONS

REGINA magnetic curves are supplied as follow:

- The upper and return part are connected by stainless steel self-tapping screws Ø 4 mm.

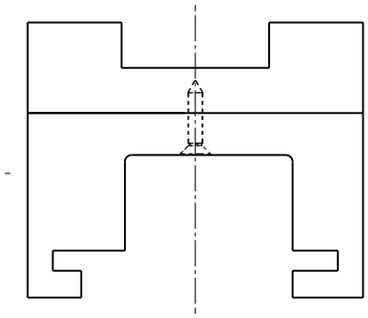

- All of REGINA curves are supplied with the return guide shoe equipped with N.4 brass threaded inserts M8 already assembled.

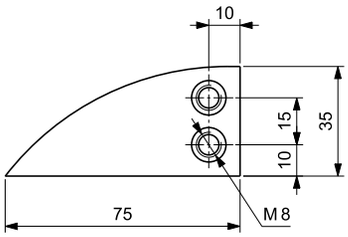

INSTALLATION OF THE MAGNETIC CURVES

REGINA magnetic curves can be installed on the conveyor in the two following ways:

1) Fixing the outer and the inner side of the curve (upper and return part jointed together) to the conveyor frame. In this case the curve is installed with the upper and return part connected as supplied by REGINA and it is fixed to the conveyor making lateral holes on the return part of the curve and using brass threaded inserts M10. These inserts can be **ORDERED SEPARATELY** with the P/N **I-SCTBM10** (component **NOT supplied** with the curves).

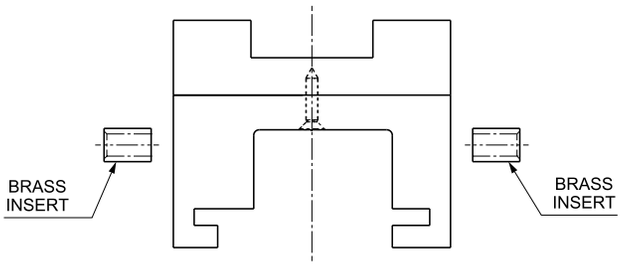

2) The upper and return part of the curve can be installed **separately** on the conveyor. In this case the curve, which is supplied with the upper and return part connected with stainless steel self-tapping screws, must be disassembled and fixed to a conveyor crossbar using the holes present on both parts of the curve. The screws to fix the upper and lower part of the curve to the crossbar must have a proper lenght depending on the conveyor structure. Those screws are **NOT** supplied by REGINA.

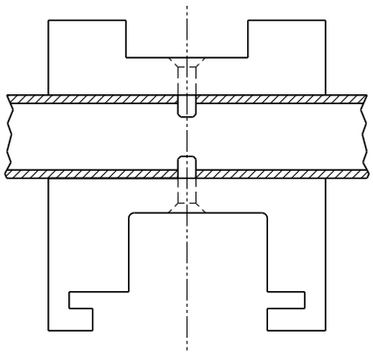

Copyright Regina Catene Calibrate s.p.a. - 2020, All rights reserved

REFERENCE TABLE

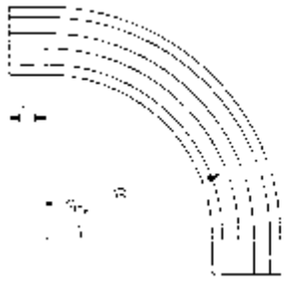

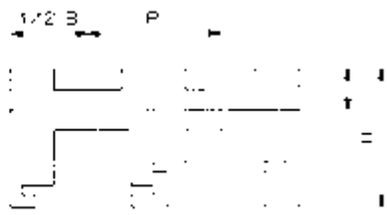

CHAIN TYPE				RADIUS [1]	TRANSVERSAL		INFEED	UPPER PART	TOTAL HEIGHT		
SERIES	WIDTH	THICKNESS mm	HINGE WIDTH mm	R mm	PITCH P mm	BASIC WIDTH B mm	LENGHT L mm	HEIGHT U mm	H mm	VERSION NUMBER	SEE PAGE
981M PHD 981M PHDG 981M	3 1/4" 83.8 mm	3	42	500	85	100	0	27	82[2]/90[3]	F 01	281
							100		90	F 02	282
						111	100		90	F 03	283
					89	100	125		82	F 04	284
				680	-	100	100		82	F 05	285
				750	85	100	100		82[2]/90[3]	F 06	286
880M RG		4				111	100		90	F 07	287
				860	-	100	125		82	F 08	288
				1000	-	100	0		82	F 09	289
					85	111	100		90	F 10	290
981M PHD 981M	4 1/2"	3	42	500	120	129	125	27	90	F 11	291
				610	120	129	125		90	F 12	292
					117	129	0		90	F 13	293
981M PHD 981M PHDG 981M	7 1/2"	3	42	610	196	214	125	27	90	F 14	294
				860	-	214	0		82	F 15	295
				1000	-	214	0		82	F 16	296
PHD 9857M PHDG 9857M 882M HFX 882M	7 1/2"	3 4,8	57	610 [4]	195	200	100	32	87[2]/95[3]	H 01	297
				750	195	200	100		87[2]/95[3]	H 02	298
				860	-	214	0		87	H 03	299
				1000	-	214	0		87	H 04	300
882M HFX 882M	10"	4,8	57	860	-	290	0	32	87	H 05	301
	12"					340				H 06	302
LBP 882M	7 1/2"	4,8	57	860	-	214	0	32	95	L 01	303
	10"					290				L 02	304
	12"					340				L 03	305
782M 783M	83.8 mm	8,7	42	500	85	100	0	27	82[2]/90[3]	M 01	306
							100		90	M 02	307
						111	100		90	M 03	308
				750	85	100	100		90	M 04	309
						111	100		90	M 05	310
				1000	85	100	0		90	M 06	311
793M	83.8 mm	12,7	42	500	85	100	0	27	82[2]/90[3]	U 01	312
							100		90	U 02	313
						111	100		90	U 03	314
				750	85	100	100		90	U 04	315
				1000	85	100	0		90	U 05	316
793M	4 1/2"	12,7	42	500	120	129	125	27	90	U 06	317

[1] First track is intended.
[2] For curves with one track.
[3] For multi tracks curves.
[4] 882M and HFX 882M series only.

 Copyright Regina Catene Calibrate s.p.a. - 2020, All rights reserved

VERSION F 01

SUITABLE FOR CHAINS:

- **981M K 3¼** (See page 38)
- **981M K 83,8** (See page 38)
- **PHD 981M K 3¼** (See page 38)
- **PHD 981M K 83,8** (See page 38)
- **PHDG 981M K 3¼** (See page 46)
- **880M RG K 3¼** (See page 57)
- **880M RG K 83,8** (See page 57)

RADIUS mm	BASIC WIDTH mm	TRANSVERSAL PITCH mm	INFEED/ OUTFEED LENGTH mm
500	100	85	-

Single track

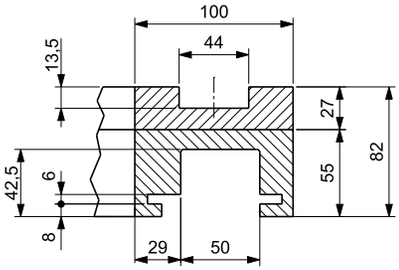

Multi track

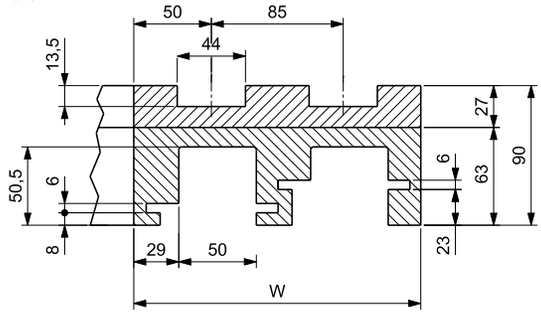

Radius

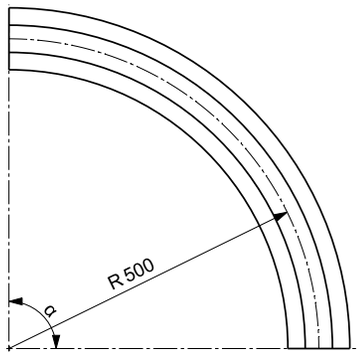

Return guide shoe

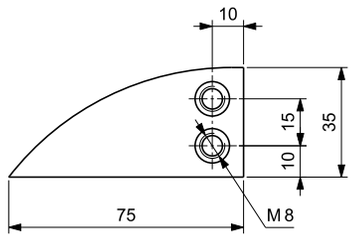

On request, Upper part is available in Self-Lubricating UHMWPE & Oil-filled PA.

PART NUMBER IDENTIFICATION

CURVES	SUPREME -A	NEW e-SLIDE	SUPREME -S
UPPER PART MATERIAL	UHMWPE	High performance Self-lubricating UHMWPE	Oil-filled PA
PART NUMBERS	See table below	Replace "MF" with "MFE" Example: 2 tracks, 90° curve angle, P/N: MFE02AAY/110	Replace "MF" with "MFP" Example: 2 tracks, 90° curve angle, P/N: MFP02AAY/110

Curve installation see page 279

Curve material see page 278

N. OF TRACKS	TOTAL WIDTH W mm	PART NUMBER Curve angle α 15°	30°	45°	60°	75°	90°
1	100	**MF01AFX/100**	**MF01AEX/100**	**MF01ACX/100**	**MF01ABX/100**	**MF01ALX/100**	**MF01AAX/100**
2	185	**MF02AFY/110**	**MF02AEY/110**	**MF02ACY/110**	**MF02ABY/110**	**MF02ALY/110**	**MF02AAY/110**
3	270	**MF03AFY/110**	**MF03AEY/110**	**MF03ACY/110**	**MF03ABY/110**	**MF03ALY/110**	**MF03AAY/110**
4	355	**MF04AFY/110**	**MF04AEY/110**	**MF04ACY/110**	**MF04ABY/110**	**MF04ALY/110**	**MF04AAY/110**
5	440	**MF05AFY/110**	**MF05AEY/110**	**MF05ACY/110**	**MF05ABY/110**	**MF05ALY/110**	**MF05AAY/110**
6	525	**MF06AFY/110**	**MF06AEY/110**	**MF06ACY/110**	**MF06ABY/110**	**MF06ALY/110**	**MF06AAY/110**

NOTE: For custom requests with dimensions different from the standard, please refer to page 318.

Copyright Regina Catene Calibrate s.p.a. - 2020, All rights reserved

VERSION F 02

SUITABLE FOR CHAINS:

- **981M K 3¼** (See page 38)
- **981M K 83,8** (See page 38)
- **PHD 981M K 3¼** (See page 38)
- **PHD 981M K 83,8** (See page 38)
- **PHDG 981M K 3¼** (See page 46)
- **880M RG K 3¼** (See page 57)
- **880M RG K 83,8** (See page 57)

RADIUS mm	BASIC WIDTH mm	TRANSVERSAL PITCH mm	INFEED/ OUTFEED LENGTH mm
500	100	85	100

Single track

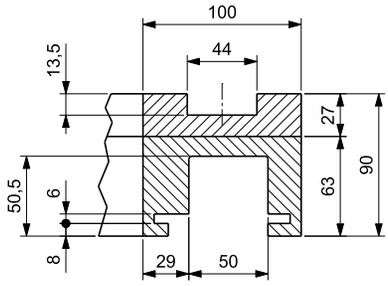

Multi track

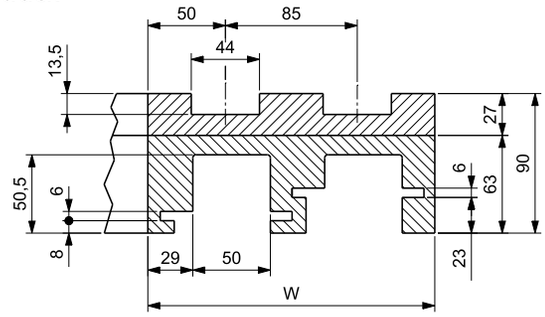

Radius

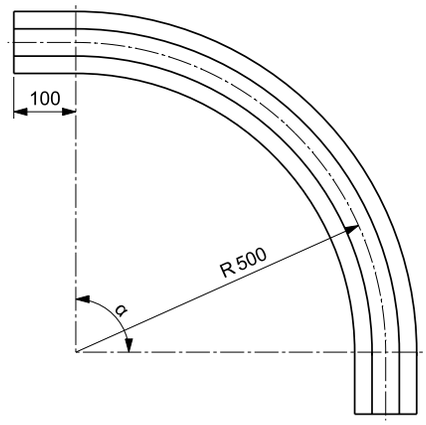

Return guide shoe

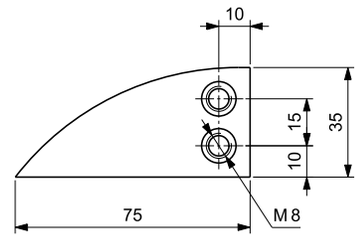

On request, Upper part is available in Self-Lubricating UHMWPE & Oil-filled PA.

PART NUMBER IDENTIFICATION

CURVES	SUPREME -A	NEW e-SLIDE	SUPREME -S
UPPER PART MATERIAL	UHMWPE	High performance Self-lubricating UHMWPE	Oil-filled PA
PART NUMBERS	See table below	Replace "MF" with "MFE" Example: 2 tracks, 90° curve angle, P/N: MFE02AAY/111	Replace "MF" with "MFP" Example: 2 tracks, 90° curve angle, P/N: MFP02AAY/111

Curve installation see page 279

Curve material see page 278

N. OF TRACKS	TOTAL WIDTH W mm	PART NUMBER Curve angle α 15°	30°	45°	60°	75°	90°
1	100	**MF01AFY/101**	**MF01AEY/101**	**MF01ACY/101**	**MF01ABY/101**	**MF01ALY/101**	**MF01AAY/101**
2	185	**MF02AFY/111**	**MF02AEY/111**	**MF02ACY/111**	**MF02ABY/111**	**MF02ALY/111**	**MF02AAY/111**
3	270	**MF03AFY/111**	**MF03AEY/111**	**MF03ACY/111**	**MF03ABY/111**	**MF03ALY/111**	**MF03AAY/111**
4	355	**MF04AFY/111**	**MF04AEY/111**	**MF04ACY/111**	**MF04ABY/111**	**MF04ALY/111**	**MF04AAY/111**
5	440	**MF05AFY/111**	**MF05AEY/111**	**MF05ACY/111**	**MF05ABY/111**	**MF05ALY/111**	**MF05AAY/111**
6	525	**MF06AFY/111**	**MF06AEY/111**	**MF06ACY/111**	**MF06ABY/111**	**MF06ALY/111**	**MF06AAY/111**

NOTE: For custom requests with dimensions different from the standard, please refer to page 318.

 Copyright Regina Catene Calibrate s.p.a. - 2020, All rights reserved

VERSION F 03

SUITABLE FOR CHAINS:

- **981M K 3¼** (See page 38)
- **981M K 83,8** (See page 38)
- **PHD 981M K 3¼** (See page 38)
- **PHD 981M K 83,8** (See page 38)
- **PHDG 981M K 3¼** (See page 46)
- **880M RG K 3¼** (See page 57)
- **880M RG K 83,8** (See page 57)

RADIUS mm	BASIC WIDTH mm	TRANSVERSAL PITCH mm	INFEED/ OUTFEED LENGTH mm
500	111	85	100

Single track

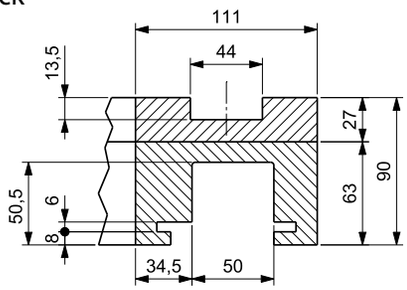

Multi track

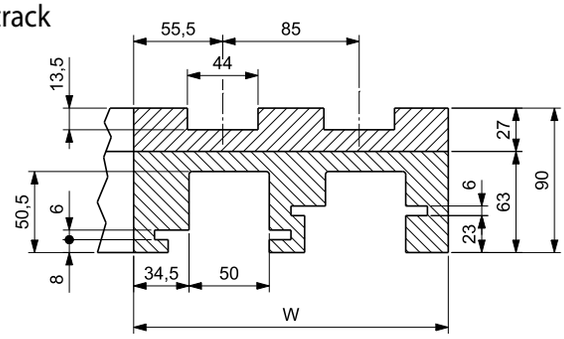

Radius

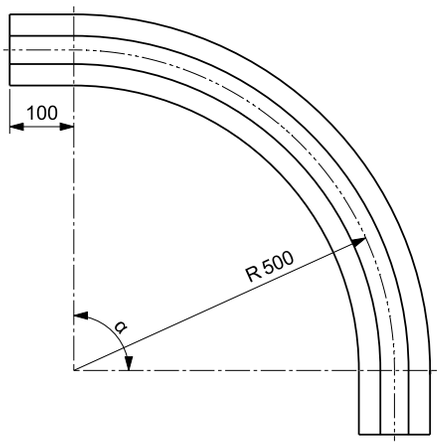

Return guide shoe

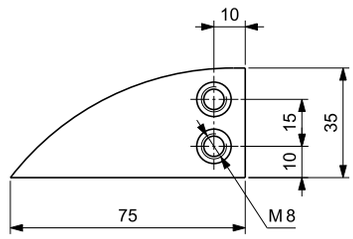

On request, Upper part is available in Self-Lubricating UHMWPE & Oil-filled PA.

PART NUMBER IDENTIFICATION

CURVES	SUPREME -A	NEW e-SLIDE	SUPREME -S
UPPER PART MATERIAL	UHMWPE	High performance Self-lubricating UHMWPE	Oil-filled PA
PART NUMBERS	See table below	Replace "MF" with "MFE" Example: 2 tracks, 90° curve angle, P/N: MFE02AAY/311	Replace "MF" with "MFP" Example: 2 tracks, 90° curve angle, P/N: MFP02AAY/311

Curve installation see page 279

Curve material see page 278

N. OF TRACKS	TOTAL WIDTH W mm	PART NUMBER Curve angle α 15°	30°	45°	60°	75°	90°
1	111	**MF01AFY/301**	**MF01AEY/301**	**MF01ACY/301**	**MF01ABY/301**	**MF01ALY/301**	**MF01AAY/301**
2	196	**MF02AFY/311**	**MF02AEY/311**	**MF02ACY/311**	**MF02ABY/311**	**MF02ALY/311**	**MF02AAY/311**
3	281	**MF03AFY/311**	**MF03AEY/311**	**MF03ACY/311**	**MF03ABY/311**	**MF03ALY/311**	**MF03AAY/311**
4	366	**MF04AFY/311**	**MF04AEY/311**	**MF04ACY/311**	**MF04ABY/311**	**MF04ALY/311**	**MF04AAY/311**
5	451	**MF05AFY/311**	**MF05AEY/311**	**MF05ACY/311**	**MF05ABY/311**	**MF05ALY/311**	**MF05AAY/311**
6	536	**MF06AFY/311**	**MF06AEY/311**	**MF06ACY/311**	**MF06ABY/311**	**MF06ALY/311**	**MF06AAY/311**

NOTE: For custom requests with dimensions different from the standard, please refer to page 318.

Copyright Regina Catene Calibrate s.p.a. - 2020, All rights reserved

VERSION F 04

SUITABLE FOR CHAINS:

- **981M K 3¼** (See page 38)
- **981M K 83,8** (See page 38)
- **PHD 981M K 3¼** (See page 38)
- **PHD 981M K 83,8** (See page 38)
- **PHDG 981M K 3¼** (See page 46)
- **880M RG K 3¼** (See page 57)
- **880M RG K 83,8** (See page 57)

RADIUS mm	BASIC WIDTH mm	TRANSVERSAL PITCH mm	INFEED/ OUTFEED LENGTH mm
500	100	89	125

Single track

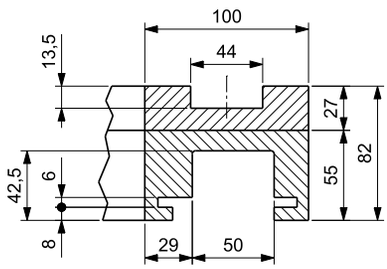

Multi track

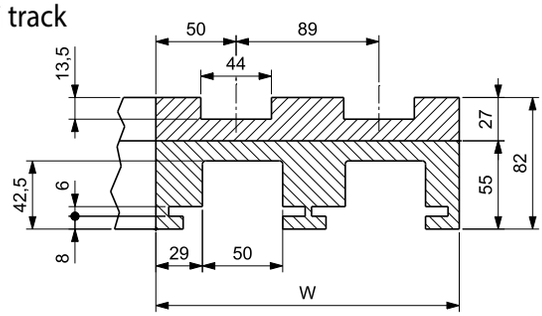

Radius

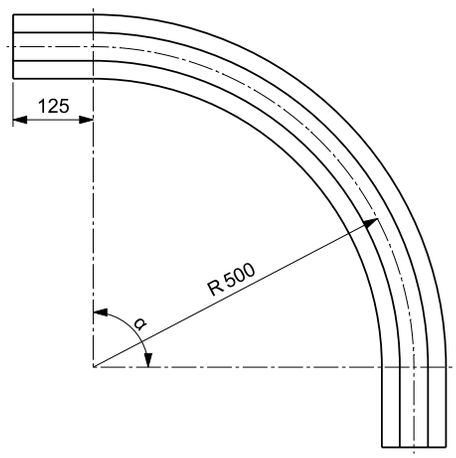

Return guide shoe

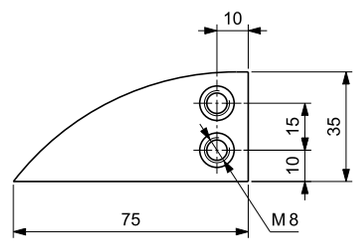

On request, Upper part is available in Self-Lubricating UHMWPE & Oil-filled PA.

PART NUMBER IDENTIFICATION

CURVES	SUPREME -A	NEW e-SLIDE	SUPREME -S
UPPER PART MATERIAL	UHMWPE	High performance Self-lubricating UHMWPE	Oil-filled PA
PART NUMBERS	See table below	Replace "MF" with "MFE" Example: 2 tracks, 90° curve angle, P/N: MFE02AAX/122	Replace "MF" with "MFP" Example: 2 tracks, 90° curve angle, P/N: MFP02AAX/122

Curve installation see page 279

Curve material see page 278

N. OF TRACKS	TOTAL WIDTH W mm	PART NUMBER Curve angle α 15°	30°	45°	60°	75°	90°
1	100	**MF01AFX/102**	**MF01AEX/102**	**MF01ACX/102**	**MF01ABX/102**	**MF01ALX/102**	**MF01AAX/102**
2	189	**MF02AFX/122**	**MF02AEX/122**	**MF02ACX/122**	**MF02ABX/122**	**MF02ALX/122**	**MF02AAX/122**
3	278	**MF03AFX/122**	**MF03AEX/122**	**MF03ACX/122**	**MF03ABX/122**	**MF03ALX/122**	**MF03AAX/122**
4	367	**MF04AFX/122**	**MF04AEX/122**	**MF04ACX/122**	**MF04ABX/122**	**MF04ALX/122**	**MF04AAX/122**
5	456	**MF05AFX/122**	**MF05AEX/122**	**MF05ACX/122**	**MF05ABX/122**	**MF05ALX/122**	**MF05AAX/122**
6	545	**MF06AFX/122**	**MF06AEX/122**	**MF06ACX/122**	**MF06ABX/122**	**MF06ALX/122**	**MF06AAX/122**

NOTE: For custom requests with dimensions different from the standard, please refer to page 318.

 Copyright Regina Catene Calibrate s.p.a. - 2020, All rights reserved

VERSION F 05

SUITABLE FOR CHAINS:

- **981M K 3¼** (See page 38)
- **981M K 83,8** (See page 38)
- **PHD 981M K 3¼** (See page 38)
- **PHD 981M K 83,8** (See page 38)
- **PHDG 981M K 3¼** (See page 46)
- **880M RG K 3¼** (See page 57)
- **880M RG K 83,8** (See page 57)

RADIUS mm	BASIC WIDTH mm	TRANSVERSAL PITCH mm	INFEED/ OUTFEED LENGTH mm
680	100	Single track	100

Single track

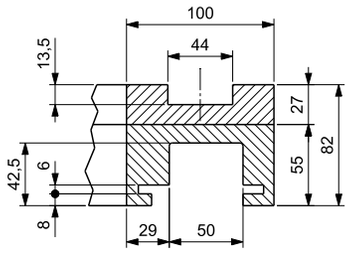

Radius

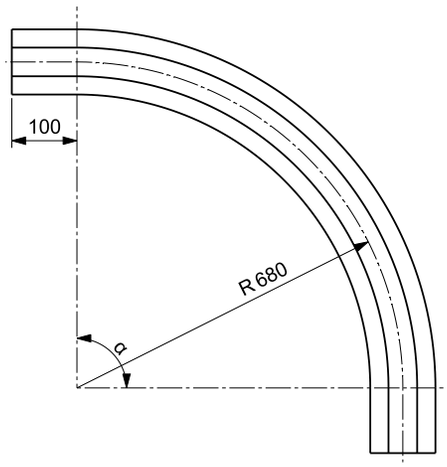

Return guide shoe

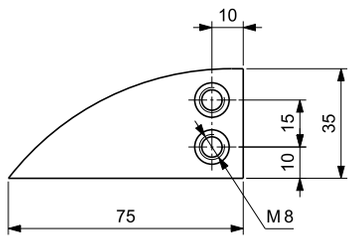

On request, Upper part is available in Self-Lubricating UHMWPE & Oil-filled PA.

PART NUMBER IDENTIFICATION

CURVES	SUPREME -A	NEW e-SLIDE	SUPREME -S
UPPER PART MATERIAL	UHMWPE	High performance Self-lubricating UHMWPE	Oil-filled PA
PART NUMBERS	See table below	Replace "MF" with "MFE" Example: 1 track, 90° curve angle, P/N: MFE01DAX/101	Replace "MF" with "MFP" Example: 1 track, 90° curve angle, P/N: MFP01DAX/101

Curve installation see page 279

Curve material see page 278

N. OF TRACKS	TOTAL WIDTH W mm	PART NUMBER Curve angle α 15°	30°	45°	60°	75°	90°
1	100	**MF01DFX/101**	**MF01DEX/101**	**MF01DCX/101**	**MF01DBX/101**	**MF01DLX/101**	**MF01DAX/101**

NOTE: For custom requests with dimensions different from the standard, please refer to page 318.

Copyright Regina Catene Calibrate s.p.a. - 2020, All rights reserved

VERSION F 06

SUITABLE FOR CHAINS:

- **981M K 3¼** (See page 38)
- **981M K 83,8** (See page 38)
- **PHD 981M K 3¼** (See page 38)
- **PHD 981M K 83,8** (See page 38)
- **PHDG 981M K 3¼** (See page 46)
- **880M RG K 3¼** (See page 57)
- **880M RG K 83,8** (See page 57)

RADIUS mm	BASIC WIDTH mm	TRANSVERSAL PITCH mm	INFEED/ OUTFEED LENGTH mm
750	100	85	100

Single track

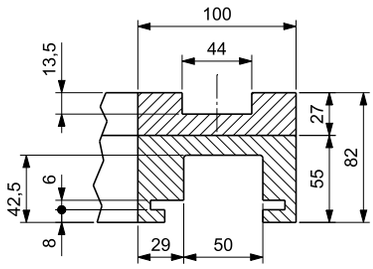

Multi track

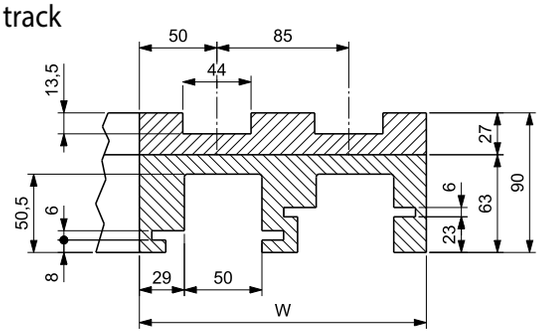

Radius

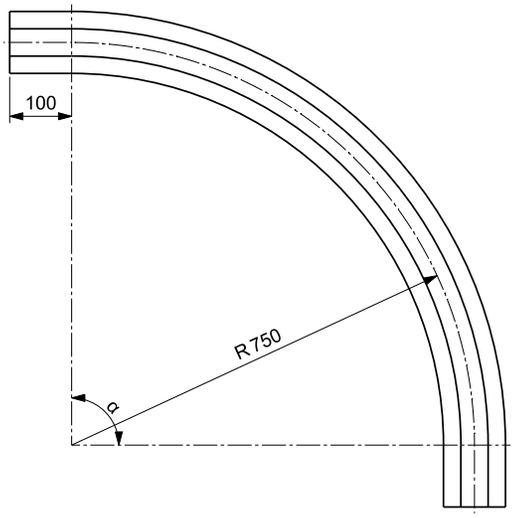

Return guide shoe

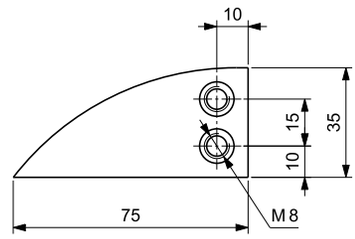

On request, Upper part is available in Self-Lubricating UHMWPE & Oil-filled PA.

PART NUMBER IDENTIFICATION

CURVES	SUPREME -A	NEW e-SLIDE	SUPREME -S
UPPER PART MATERIAL	UHMWPE	High performance Self-lubricating UHMWPE	Oil-filled PA
PART NUMBERS	See table below	Replace "MF" with "MFE" Example: 2 tracks, 90° curve angle, P/N: MFE02EAY/111	Replace "MF" with "MFP" Example: 2 tracks, 90° curve angle, P/N: MFP02EAY/111

Curve installation see page 279

Curve material see page 278

N. OF TRACKS	TOTAL WIDTH W mm	PART NUMBER Curve angle α 15°	30°	45°	60°	75°	90°
1	100	**MF01EFX/101**	**MF01EEX/101**	**MF01ECX/101**	**MF01EBX/101**	**MF01ELX/101**	**MF01EAX/101**
2	185	**MF02EFY/111**	**MF02EEY/111**	**MF02ECY/111**	**MF02EBY/111**	**MF02ELY/111**	**MF02EAY/111**
3	270	**MF03EFY/111**	**MF03EEY/111**	**MF03ECY/111**	**MF03EBY/111**	**MF03ELY/111**	**MF03EAY/111**
4	335	**MF04EFY/111**	**MF04EEY/111**	**MF04ECY/111**	**MF04EBY/111**	**MF04ELY/111**	**MF04EAY/111**
5	400	**MF05EFY/111**	**MF05EEY/111**	**MF05ECY/111**	**MF05EBY/111**	**MF05ELY/111**	**MF05EAY/111**
6	525	**MF06EFY/111**	**MF06EEY/111**	**MF06ECY/111**	**MF06EBY/111**	**MF06ELY/111**	**MF06EAY/111**

NOTE: For custom requests with dimensions different from the standard, please refer to page 318

 Copyright Regina Catene Calibrate s.p.a. - 2020, All rights reserved

VERSION F 07

SUITABLE FOR CHAINS:

- **981M K 3¼** (See page 38)
- **981M K 83,8** (See page 38)
- **PHD 981M K 3¼** (See page 38)
- **PHD 981M K 83,8** (See page 38)
- **PHDG 981M K 3¼** (See page 46)
- **880M RG K 3¼** (See page 57)
- **880M RG K 83,8** (See page 57)

RADIUS mm	BASIC WIDTH mm	TRANSVERSAL PITCH mm	INFEED/ OUTFEED LENGTH mm
750	111	85	100

Single track

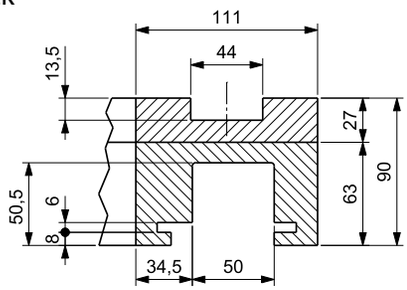

Multi track

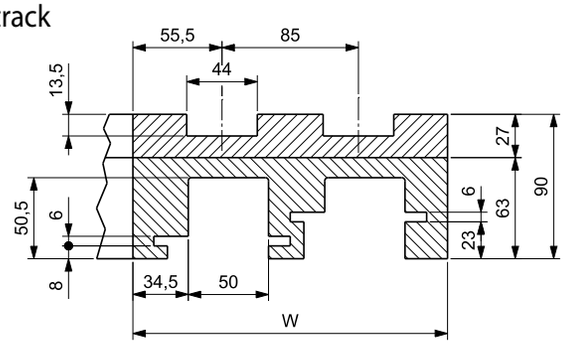

Radius

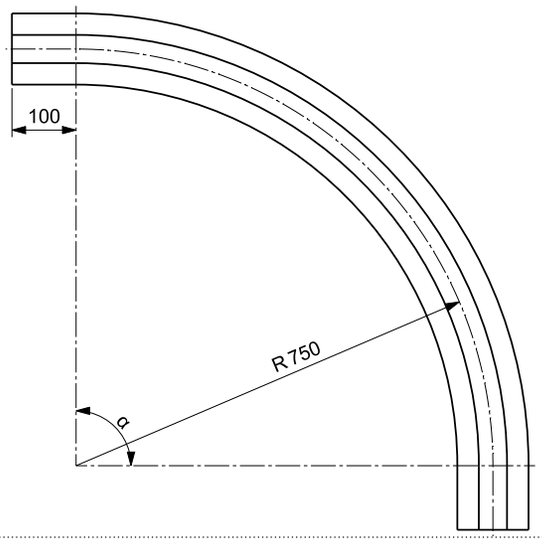

Return guide shoe

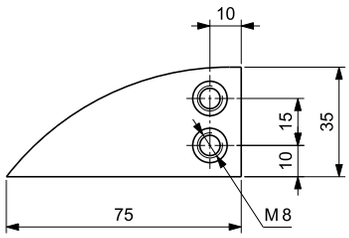

On request, Upper part is available in Self-Lubricating UHMWPE & Oil-filled PA.

PART NUMBER IDENTIFICATION

CURVES	SUPREME -A	NEW e-SLIDE	SUPREME -S
UPPER PART MATERIAL	UHMWPE	High performance Self-lubricating UHMWPE	Oil-filled PA
PART NUMBERS	See table below	Replace "MF" with "MFE" Example: 2 tracks, 90° curve angle, P/N: MFE02EAY/311	Replace "MF" with "MFP" Example: 2 tracks, 90° curve angle, P/N: MFP02EAY/311

Curve installation see page 279

Curve material see page 278

N. OF TRACKS	TOTAL WIDTH W mm	PART NUMBER Curve angle α 15°	30°	45°	60°	75°	90°
1	111	**MF01EFY/301**	**MF01EEY/301**	**MF01ECY/301**	**MF01EBY/301**	**MF01ELY/301**	**MF01EAY/301**
2	196	**MF02EFY/311**	**MF02EEY/311**	**MF02ECY/311**	**MF02EBY/311**	**MF02ELY/311**	**MF02EAY/311**
3	281	**MF03EFY/311**	**MF03EEY/311**	**MF03ECY/311**	**MF03EBY/311**	**MF03ELY/311**	**MF03EAY/311**
4	366	**MF04EFY/311**	**MF04EEY/311**	**MF04ECY/311**	**MF04EBY/311**	**MF04ELY/311**	**MF04EAY/311**
5	451	**MF05EFY/311**	**MF05EEY/311**	**MF05ECY/311**	**MF05EBY/311**	**MF05ELY/311**	**MF05EAY/311**
6	536	**MF06EFY/311**	**MF06EEY/311**	**MF06ECY/311**	**MF06EBY/311**	**MF06ELY/311**	**MF06EAY/311**

NOTE: For custom requests with dimensions different from the standard, please refer to page 318.

Copyright Regina Catene Calibrate s.p.a. - 2020, All rights reserved

VERSION F 08

SUITABLE FOR CHAINS:

- **981M K 3¼** (See page 38)
- **981M K 83,8** (See page 38)
- **PHD 981M K 3¼** (See page 38)
- **PHD 981M K 83,8** (See page 38)
- **PHDG 981M K 3¼** (See page 46)
- **880M RG K 3¼** (See page 57)
- **880M RG K 83,8** (See page 57)

RADIUS mm	BASIC WIDTH mm	TRANSVERSAL PITCH mm	INFEED/ OUTFEED LENGTH mm
860	100	Single track	125

Single track

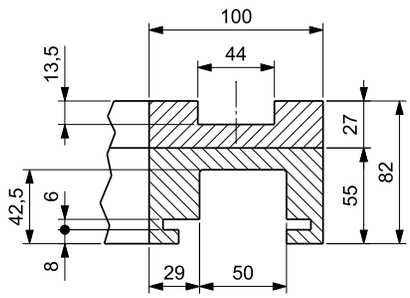

Radius

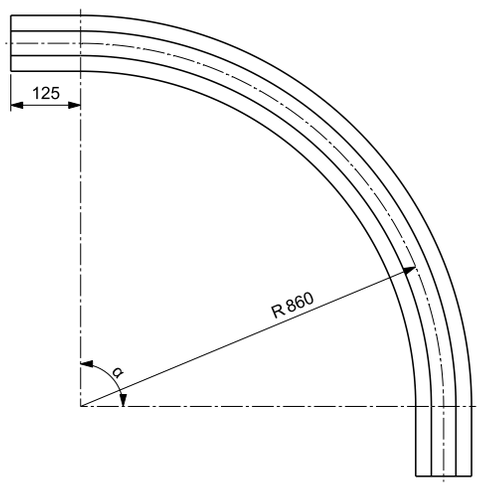

Return guide shoe

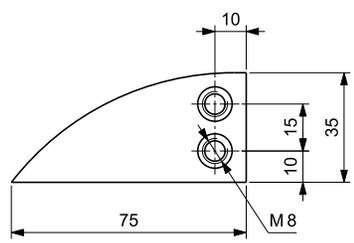

On request, Upper part is available in Self-Lubricating UHMWPE & Oil-filled PA.

PART NUMBER IDENTIFICATION

CURVES	SUPREME -A	NEW e-SLIDE	SUPREME -S
UPPER PART MATERIAL	UHMWPE	High performance Self-lubricating UHMWPE	Oil-filled PA
PART NUMBERS	See table below	Replace "MF" with "MFE" Example: 1 track, 90° curve angle, P/N: MFE01FAX/102	Replace "MF" with "MFP" Example: 1 track, 90° curve angle, P/N: MFP01FAX/102

Curve installation see page 279

Curve material see page 278

N. OF TRACKS	TOTAL WIDTH W mm	PART NUMBER Curve angle α 15°	30°	45°	60°	75°	90°
1	100	**MF01FFX/102**	**MF01FEX/102**	**MF01FCX/102**	**MF01FBX/102**	**MF01FLX/102**	**MF01FAX/102**

NOTE: For custom requests with dimensions different from the standard, please refer to page 318.

 Copyright Regina Catene Calibrate s.p.a. - 2020, All rights reserved

VERSION F 09

SUITABLE FOR CHAINS:

- **981M K 3¼** (See page 38)
- **981M K 83,8** (See page 38)
- **PHD 981M K 3¼** (See page 38)
- **PHD 981M K 83,8** (See page 38)
- **PHDG 981M K 3¼** (See page 46)
- **880M RG K 3¼** (See page 57)
- **880M RG K 83,8** (See page 57)

RADIUS mm	BASIC WIDTH mm	TRANSVERSAL PITCH mm	INFEED/ OUTFEED LENGTH mm
1000	100	Single track	-

Single track

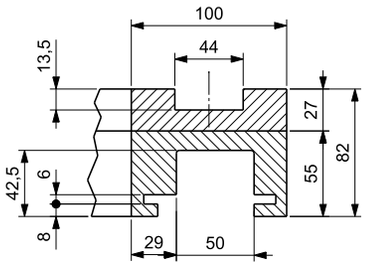

Radius

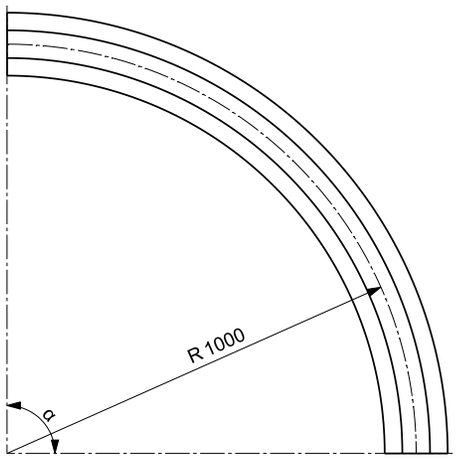

Return guide shoe

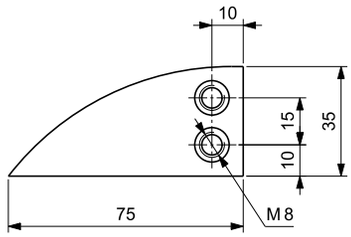

On request, Upper part is available in Self-Lubricating UHMWPE & Oil-filled PA.

PART NUMBER IDENTIFICATION

CURVES	SUPREME -A	NEW e-SLIDE	SUPREME -S
UPPER PART MATERIAL	UHMWPE	High performance Self-lubricating UHMWPE	Oil-filled PA
PART NUMBERS	See table below	Replace "MF" with "MFE" Example: 1 track,, 90° curve angle, P/N: MFE01GAX/102	Replace "MF" with "MFP" Example: 1 track, 90° curve angle, P/N: MFP01GAX/102

Curve installation see page 279

Curve material see page 278

N. OF TRACKS	TOTAL WIDTH W mm	PART NUMBER Curve angle α 15°	30°	45°	60°	75°	90°
1	100	**MF01GFX/100**	**MF01GEX/100**	**MF01GCX/100**	**MF01GBX/100**	**MF01GLX/100**	**MF01GAX/100**

NOTE: For custom requests with dimensions different from the standard, please refer to page 318.

Copyright Regina Catene Calibrate s.p.a. - 2020, All rights reserved

VERSION F 10

SUITABLE FOR CHAINS:

- **981M K 3¼** (See page 38)
- **981M K 83,8** (See page 38)
- **PHD 981M K 3¼** (See page 38)
- **PHD 981M K 83,8** (See page 38)
- **PHDG 981M K 3¼** (See page 46)
- **880M RG K 3¼** (See page 57)
- **880M RG K 83,8** (See page 57)

RADIUS mm	BASIC WIDTH mm	TRANSVERSAL PITCH mm	INFEED/ OUTFEED LENGTH mm
1000	111	85	100

Single track

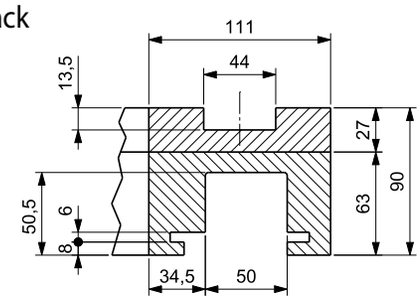

Multi track

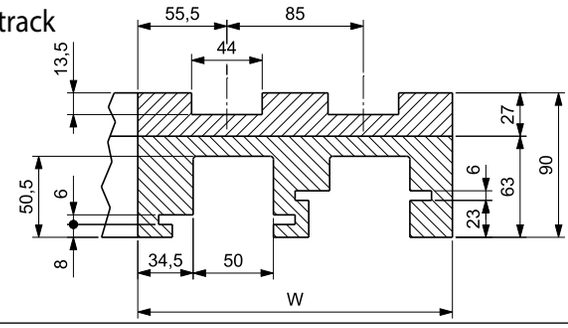

Radius

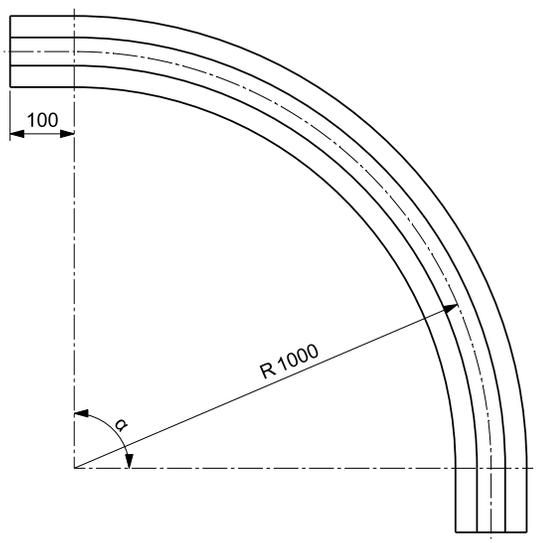

Return guide shoe

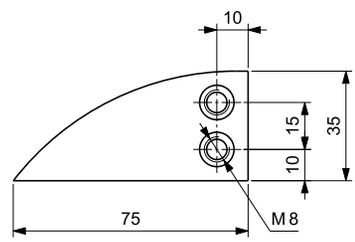

On request, Upper part is available in Self-Lubricating UHMWPE & Oil-filled PA.

PART NUMBER IDENTIFICATION

CURVES	SUPREME -A	NEW e-SLIDE	SUPREME -S
UPPER PART MATERIAL	UHMWPE	High performance Self-lubricating UHMWPE	Oil-filled PA
PART NUMBERS	See table below	Replace "MF" with "MFE" Example: 2 tracks, 90° curve angle, P/N: MFE02GAY/311	Replace "MF" with "MFP" Example: 2 tracks, 90° curve angle, P/N: MFP02GAY/311

Curve installation see page 279

Curve material see page 278

N. OF TRACKS	TOTAL WIDTH W mm	PART NUMBER Curve angle α 15°	30°	45°	60°	75°	90°
1	111	**MF01GFY/301**	**MF01GEY/301**	**MF01GCY/301**	**MF01GBY/301**	**MF01GLY/301**	**MF01GAY/301**
2	196	**MF02GFY/311**	**MF02GEY/311**	**MF02GCY/311**	**MF02GBY/311**	**MF02GLY/311**	**MF02GAY/311**
3	281	**MF03GFY/311**	**MF03GEY/311**	**MF03GCY/311**	**MF03GBY/311**	**MF03GLY/311**	**MF03GAY/311**
4	366	**MF04GFY/311**	**MF04GEY/311**	**MF04GCY/311**	**MF04GBY/311**	**MF04GLY/311**	**MF04GAY/311**
5	451	**MF05GFY/311**	**MF05GEY/311**	**MF05GCY/311**	**MF05GBY/311**	**MF05GLY/311**	**MF05GAY/311**
6	536	**MF06GFY/311**	**MF06GEY/311**	**MF06GCY/311**	**MF06GBY/311**	**MF06GLY/311**	**MF06GAY/311**

NOTE: For custom requests with dimensions different from the standard, please refer to page 318.

 Copyright Regina Catene Calibrate s.p.a. - 2020, All rights reserved

VERSION F 11

SUITABLE FOR CHAINS:
- **981M K 4½** (See page 38)
- **PHD 981M K 4½** (See page 38)
- **880M RG K 4½** (See page 57)

RADIUS mm	BASIC WIDTH mm	TRANSVERSAL PITCH mm	INFEED/ OUTFEED LENGTH mm
500	129	120	125

Single track

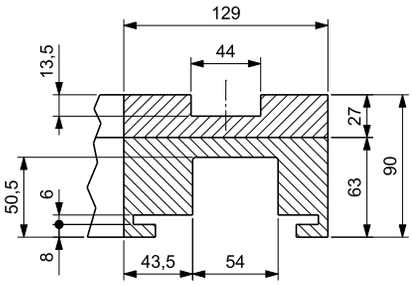

Multi track

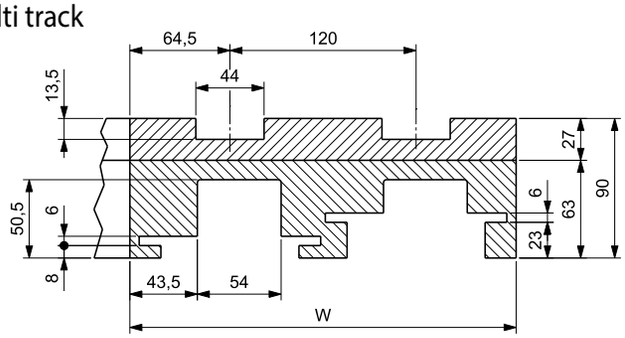

Radius

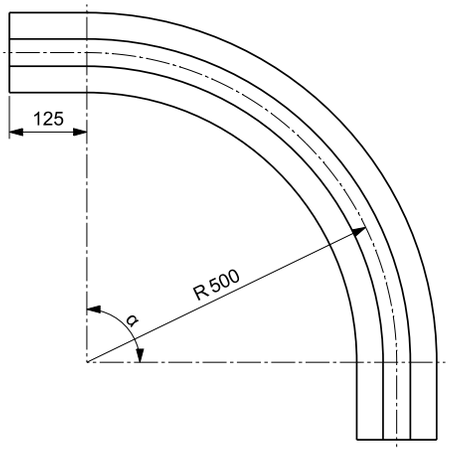

Return guide shoe

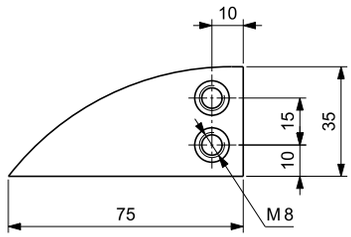

On request, Upper part is available in Self-Lubricating UHMWPE & Oil-filled PA.

PART NUMBER IDENTIFICATION			
CURVES	SUPREME -A	NEW e-SLIDE	SUPREME -S
UPPER PART MATERIAL	UHMWPE	High performance Self-lubricating UHMWPE	Oil-filled PA
PART NUMBERS	See table below	Replace "MF" with "MFE" Example: 2 tracks, 90° curve angle, P/N: MFE02AAY/442	Replace "MF" with "MFP" Example: 2 tracks, 90° curve angle, P/N: MFP02AAY/442

Curve installation see page 279

Curve material see page 278

N. OF TRACKS	TOTAL WIDTH W mm	PART NUMBER Curve angle α 15°	30°	45°	60°	75°	90°
1	129	**MF01AFY/402**	**MF01AEY/402**	**MF01ACY/402**	**MF01ABY/402**	**MF01ALY/402**	**MF01AAY/402**
2	249	**MF02AFY/442**	**MF02AEY/442**	**MF02ACY/442**	**MF02ABY/442**	**MF02ALY/442**	**MF02AAY/442**
3	369	**MF03AFY/442**	**MF03AEY/442**	**MF03ACY/442**	**MF03ABY/442**	**MF03ALY/442**	**MF03AAY/442**
4	489	**MF04AFY/442**	**MF04AEY/442**	**MF04ACY/442**	**MF04ABY/442**	**MF04ALY/442**	**MF04AAY/442**
5	609	**MF05AFY/442**	**MF05AEY/442**	**MF05ACY/442**	**MF05ABY/442**	**MF05ALY/442**	**MF05AAY/442**
6	729	**MF06AFY/442**	**MF06AEY/442**	**MF06ACY/442**	**MF06ABY/442**	**MF06ALY/442**	**MF06AAY/442**

NOTE: For custom requests with dimensions different from the standard, please refer to page 318.

Copyright Regina Catene Calibrate s.p.a. - 2020, All rights reserved

VERSION F 12

SUITABLE FOR CHAINS:

- **981M K 4½** (See page 38)
- **PHD 981M K 4½** (See page 38)
- **880M RG K 4½** (See page 57)

RADIUS mm	BASIC WIDTH mm	TRANSVERSAL PITCH mm	INFEED/ OUTFEED LENGTH mm
610	129	120	125

Single track

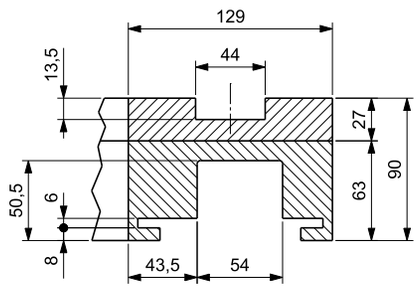

Multi track

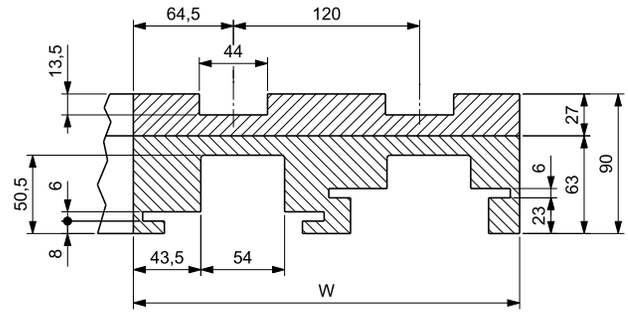

Radius

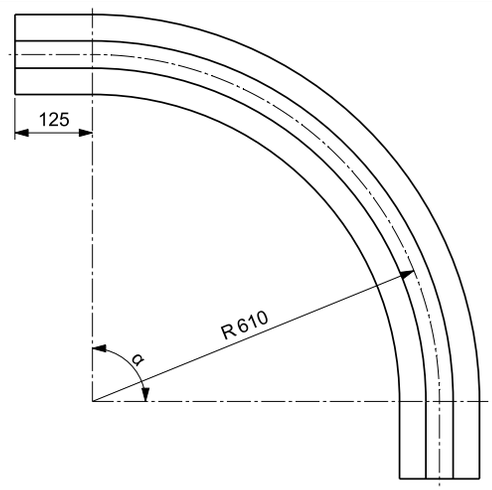

Return guide shoe

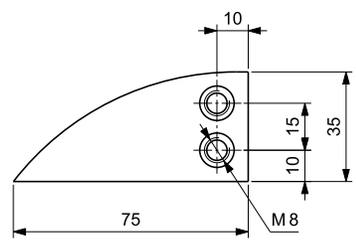

On request, Upper part is available in Self-Lubricating UHMWPE & Oil-filled PA.

PART NUMBER IDENTIFICATION

CURVES	SUPREME -A	NEW e-SLIDE	SUPREME -S
UPPER PART MATERIAL	UHMWPE	High performance Self-lubricating UHMWPE	Oil-filled PA
PART NUMBERS	See table below	Replace "MF" with "MFE" Example: 2 tracks, 90° curve angle, P/N: MFE02CAY/442	Replace "MF" with "MFP" Example: 2 tracks, 90° curve angle, P/N: MFP02CAY/442

Curve installation see page 279

Curve material see page 278

N. OF TRACKS	TOTAL WIDTH W mm	PART NUMBER Curve angle α 15°	30°	45°	60°	75°	90°
1	129	**MF01CFY/402**	**MF01CEY/402**	**MF01CCY/402**	**MF01CBY/402**	**MF01CLY/402**	**MF01CAY/402**
2	249	**MF02CFY/442**	**MF02CEY/442**	**MF02CCY/442**	**MF02CBY/442**	**MF02CLY/442**	**MF02CAY/442**
3	369	**MF03CFY/442**	**MF03CEY/442**	**MF03CCY/442**	**MF03CBY/442**	**MF03CLY/442**	**MF03CAY/442**
4	489	**MF04CFY/442**	**MF04CEY/442**	**MF04CCY/442**	**MF04CBY/442**	**MF04CLY/442**	**MF04CAY/442**
5	609	**MF05CFY/442**	**MF05CEY/442**	**MF05CCY/442**	**MF05CBY/442**	**MF05CLY/442**	**MF05CAY/442**
6	729	**MF06CFY/442**	**MF06CEY/442**	**MF06CCY/442**	**MF06CBY/442**	**MF06CLY/442**	**MF06CAY/442**

NOTE: For custom requests with dimensions different from the standard, please refer to page 318.

 Copyright Regina Catene Calibrate s.p.a. - 2020, All rights reserved

VERSION F 13

SUITABLE FOR CHAINS:
- **981M K 4½** (See page 38)
- **PHD 981M K 4½** (See page 38)
- **880M RG K 4½** (See page 57)

RADIUS mm	BASIC WIDTH mm	TRANSVERSAL PITCH mm	INFEED/ OUTFEED LENGTH mm
610	129	117	-

Single track

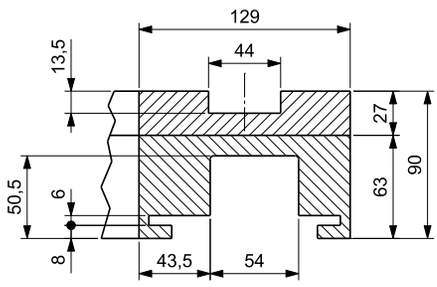

Multi track

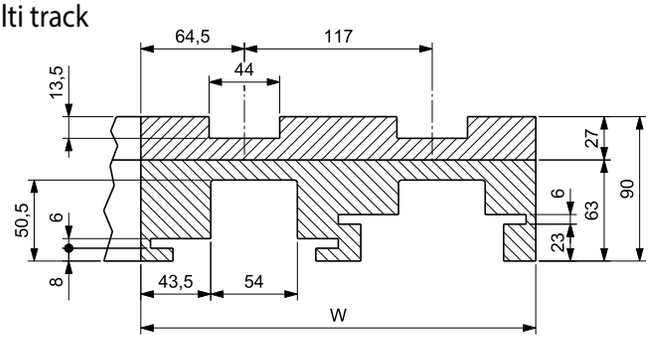

Radius

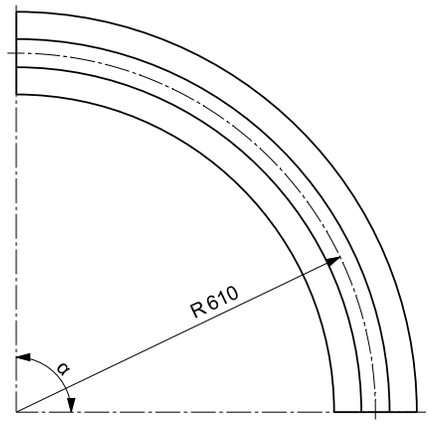

Return guide shoe

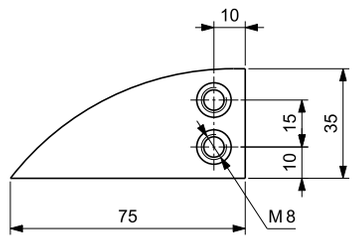

On request, Upper part is available in Self-Lubricating UHMWPE & Oil-filled PA.

PART NUMBER IDENTIFICATION			
CURVES	SUPREME -A	NEW e-SLIDE	SUPREME -S
UPPER PART MATERIAL	UHMWPE	High performance Self-lubricating UHMWPE	Oil-filled PA
PART NUMBERS	See table below	Replace "MF" with "MFE" Example: 2 tracks, 90° curve angle, P/N: MFE02CAY/450	Replace "MF" with "MFP" Example: 2 tracks, 90° curve angle, P/N: MFP02CAY/450

Curve installation see page 279

Curve material see page 278

N. OF TRACKS	TOTAL WIDTH W mm	PART NUMBER Curve angle α 15°	30°	45°	60°	75°	90°
1	129	**MF01CFY/400**	**MF01CEY/400**	**MF01CCY/400**	**MF01CBY/400**	**MF01CLY/400**	**MF01CAY/400**
2	246	**MF02CFY/450**	**MF02CEY/450**	**MF02CCY/450**	**MF02CBY/450**	**MF02CLY/450**	**MF02CAY/450**
3	363	**MF03CFY/450**	**MF03CEY/450**	**MF03CCY/450**	**MF03CBY/450**	**MF03CLY/450**	**MF03CAY/450**
4	480	**MF04CFY/450**	**MF04CEY/450**	**MF04CCY/450**	**MF04CBY/450**	**MF04CLY/450**	**MF04CAY/450**
5	597	**MF05CFY/450**	**MF05CEY/450**	**MF05CCY/450**	**MF05CBY/450**	**MF05CLY/450**	**MF05CAY/450**
6	714	**MF06CFY/450**	**MF06CEY/450**	**MF06CCY/450**	**MF06CBY/450**	**MF06CLY/450**	**MF06CAY/450**

NOTE: For custom requests with dimensions different from the standard, please refer to page 318.

Copyright Regina Catene Calibrate s.p.a. - 2020, All rights reserved

VERSION F 14

SUITABLE FOR CHAINS:
- **981M K 7½** (See page 38)
- **PHD 981M K 7½** (See page 38)
- **PHDG 981M K 7½** (See page 46)

RADIUS mm	BASIC WIDTH mm	TRANSVERSAL PITCH mm	INFEED/ OUTFEED LENGTH mm
610	214	196	125

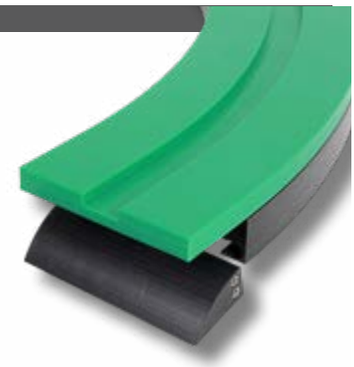

Single track

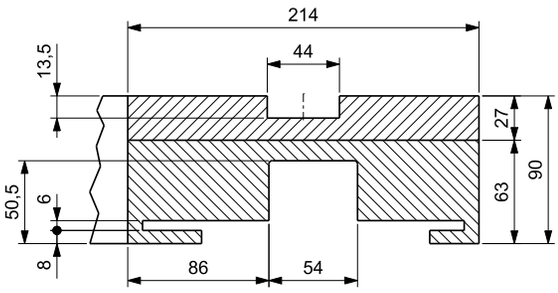

Multi track

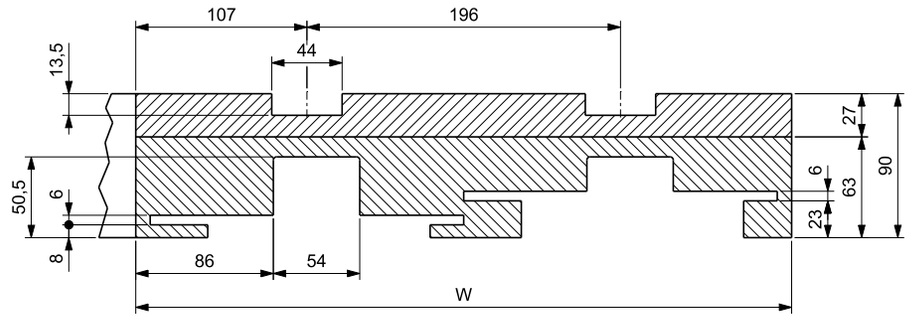

Radius

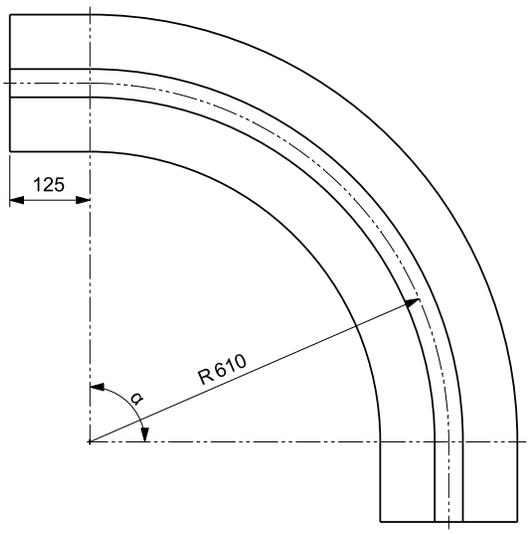

Return guide shoe

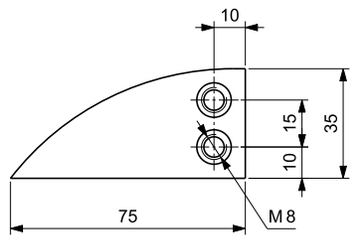

On request, Upper part is available in Self-Lubricating UHMWPE & Oil-filled PA.

PART NUMBER IDENTIFICATION

CURVES	SUPREME -A	NEW e-SLIDE	SUPREME -S
UPPER PART MATERIAL	UHMWPE	High performance Self-lubricating UHMWPE	Oil-filled PA
PART NUMBERS	See table below	Replace "MF" with "MFE" Example: 2 tracks, 90° curve angle, P/N: MFE02CAY/672	Replace "MF" with "MFP" Example: 2 tracks, 90° curve angle, P/N: MFP02CAY/672

Curve installation see page 279

Curve material see page 278

N. OF TRACKS	TOTAL WIDTH W mm	PART NUMBER Curve angle α 15°	30°	45°	60°	75°	90°
1	214	**MF01CFY/602**	**MF01CEY/602**	**MF01CCY/602**	**MF01CBY/602**	**MF01CLY/602**	**MF01CAY/602**
2	410	**MF02CFY/672**	**MF02CEY/672**	**MF02CCY/672**	**MF02CBY/672**	**MF02CLY/672**	**MF02CAY/672**
3	606	**MF03CFY/672**	**MF03CEY/672**	**MF03CCY/672**	**MF03CBY/672**	**MF03CLY/672**	**MF03CAY/672**
4	802	**MF04CFY/672**	**MF04CEY/672**	**MF04CCY/672**	**MF04CBY/672**	**MF04CLY/672**	**MF04CAY/672**

NOTE: For custom requests with dimensions different from the standard, please refer to page 318.

 Copyright Regina Catene Calibrate s.p.a. - 2020, All rights reserved

VERSION F 15

SUITABLE FOR CHAINS:
- **981M K 7½** (See page 38)
- **PHD 981M K 7½** (See page 38)
- **PHDG 981M K 7½** (See page 46)

RADIUS mm	BASIC WIDTH mm	TRANSVERSAL PITCH mm	INFEED/ OUTFEED LENGTH mm
860	214	Single track	-

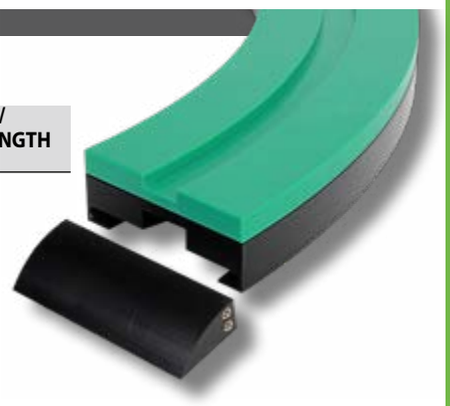

Single track

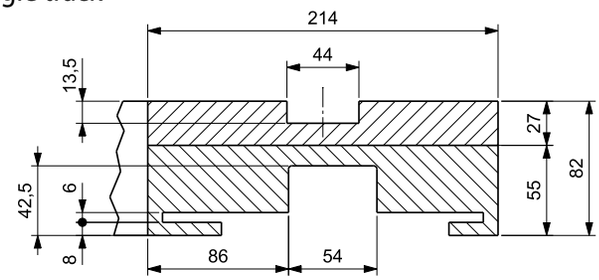

Radius

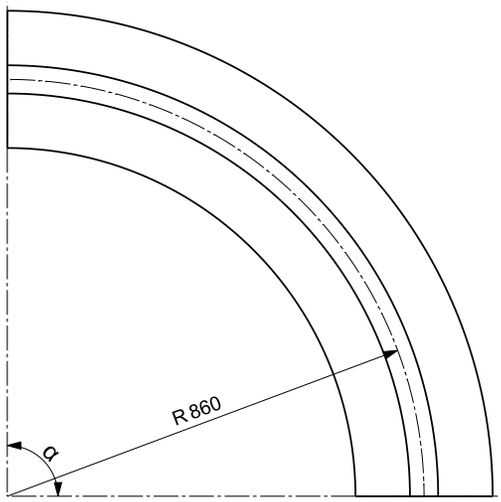

Return guide shoe

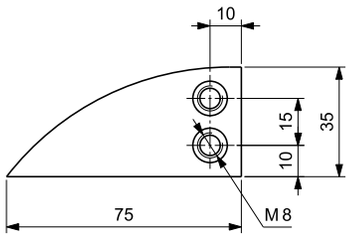

On request, Upper part is available in Self-Lubricating UHMWPE & Oil-filled PA.

PART NUMBER IDENTIFICATION

CURVES	SUPREME -A	NEW e-SLIDE	SUPREME -S
UPPER PART MATERIAL	UHMWPE	High performance Self-lubricating UHMWPE	Oil-filled PA
PART NUMBERS	See table below	Replace "MF" with "MFE" Example: 1 track, 90° curve angle, P/N: MFE01FAX/600	Replace "MF" with "MFP" Example: 1 track, 90° curve angle, P/N: MFP01FAX/600

Curve installation see page 279

Curve material see page 278

N. OF TRACKS	TOTAL WIDTH W mm	PART NUMBER Curve angle α 15°	30°	45°	60°	75°	90°
1	214	**MF01FFX/600**	**MF01FEX/600**	**MF01FCX/600**	**MF01FBX/600**	**MF01FLX/600**	**MF01FAX/600**

NOTE: For custom requests with dimensions different from the standard, please refer to page 318.

Copyright Regina Catene Calibrate s.p.a. - 2020, All rights reserved

VERSION F 16

SUITABLE FOR CHAINS:
- **981M K 7½** (See page 38)
- **PHD 981M K 7½** (See page 38)
- **PHDG 981M K 7½** (See page 46)

RADIUS mm	BASIC WIDTH mm	TRANSVERSAL PITCH mm	INFEED/ OUTFEED LENGTH mm
1000	214	Single track	-

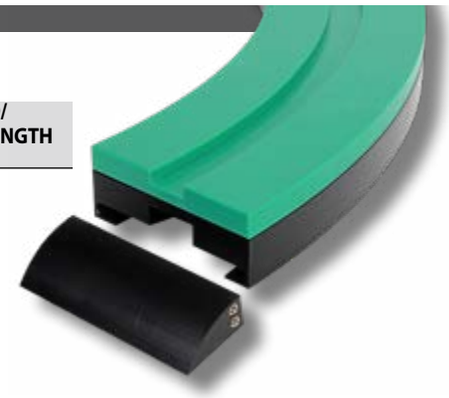

Single track

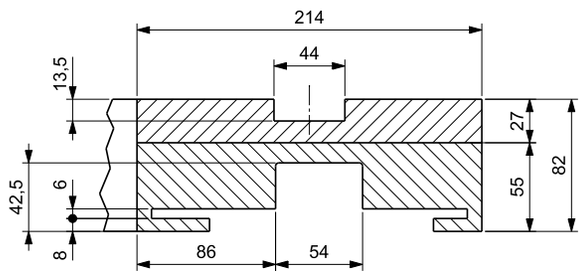

Radius

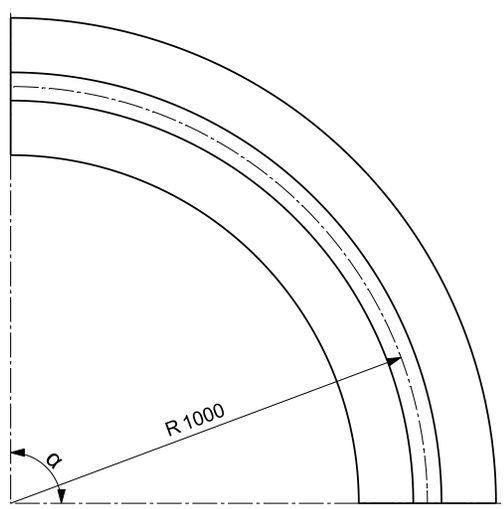

Return guide shoe

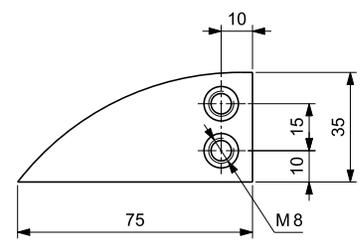

On request, Upper part is available in Self-Lubricating UHMWPE & Oil-filled PA.

PART NUMBER IDENTIFICATION			
CURVES	SUPREME -A	NEW e-SLIDE	SUPREME -S
UPPER PART MATERIAL	UHMWPE	High performance Self-lubricating UHMWPE	Oil-filled PA
PART NUMBERS	See table below	Replace "MF" with "MFE" Example: 1 track, 90° curve angle, P/N: MFE01GAX/600	Replace "MF" with "MFP" Example: 1 track, 90° curve angle, P/N: MFP01GAX/600

Curve installation see page 279

Curve material see page 278

N. OF TRACKS	TOTAL WIDTH W mm	PART NUMBER Curve angle α 15°	30°	45°	60°	75°	90°
1	214	**MF01GFX/600**	**MF01GEX/600**	**MF01GCX/600**	**MF01GBX/600**	**MF01GLX/600**	**MF01GAX/600**

NOTE: For custom requests with dimensions different from the standard, please refer to page 318.

 Copyright Regina Catene Calibrate s.p.a. - 2020, All rights reserved

VERSION H 01

SUITABLE FOR CHAINS:

- **PHD 9857M K 7½** (See page 39)
- **PHDG 9857M K 7½** (See page 47)
- **882M K 7½** (See page 62)
- **HFX 882M K 7½** (See page 71)

RADIUS mm	BASIC WIDTH mm	TRANSVERSAL PITCH mm	INFEED/ OUTFEED LENGTH mm
610	200	195	100

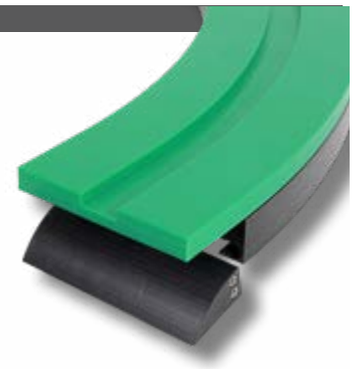

Single track

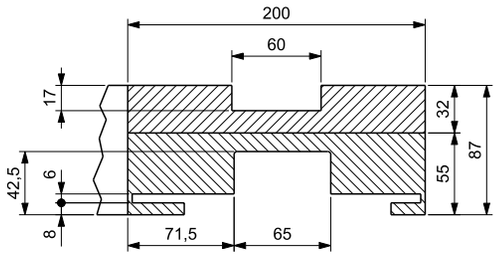

Multi track

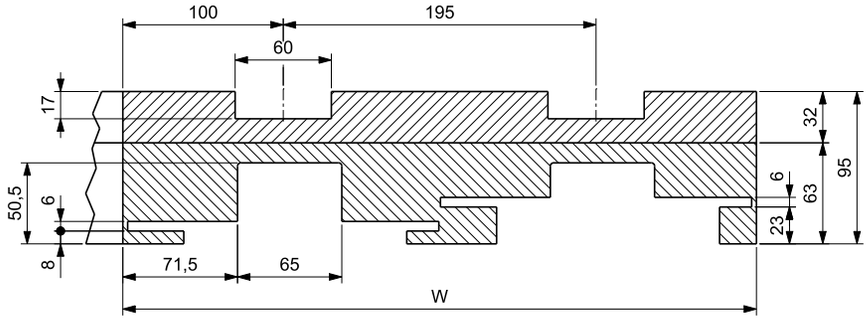

Radius

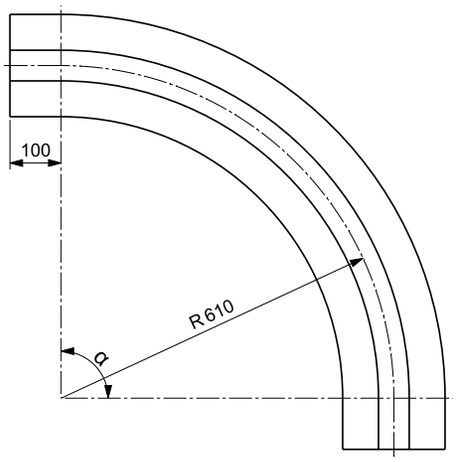

Return guide shoe

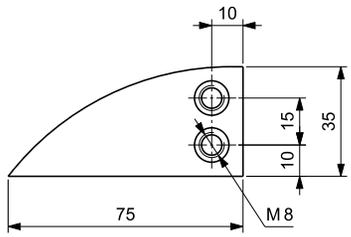

On request, Upper part is available in Self-Lubricating UHMWPE & Oil-filled PA.

PART NUMBER IDENTIFICATION

CURVES	SUPREME -A	NEW e-SLIDE	SUPREME -S
UPPER PART MATERIAL	UHMWPE	High performance Self-lubricating UHMWPE	Oil-filled PA
PART NUMBERS	See table below	Replace "MH" with "MHE" Example: 2 tracks, 90° curve angle, P/N: MHE02CAZ/561	Replace "MH" with "MHP" Example: 2 tracks, 90° curve angle, P/N: MHP02CAZ/561

Curve installation see page 279

Curve material see page 278

N. OF TRACKS	TOTAL WIDTH W mm	PART NUMBER Curve angle α 15°	30°	45°	60°	75°	90°
1	200	**MH01CFW/501**	**MH01CEW/501**	**MH01CCW/501**	**MH01CBW/501**	**MH01CLW/501**	**MH01CAW/501**
2	395	**MH02CFZ/561**	**MH02CEZ/561**	**MH02CCZ/561**	**MH02CBZ/561**	**MH02CLZ/561**	**MH02CAZ/561**
3	590	**MH03CFZ/561**	**MH03CEZ/561**	**MH03CCZ/561**	**MH03CBZ/561**	**MH03CLZ/561**	**MH03CAZ/561**
4	785	**MH04CFZ/561**	**MH04CEZ/561**	**MH04CCZ/561**	**MH04CBZ/561**	**MH04CLZ/561**	**MH04CAZ/561**

NOTE: For custom requests with dimensions different from the standard, please refer to page 318.

Copyright Regina Catene Calibrate s.p.a. - 2020, All rights reserved

VERSION H 02

SUITABLE FOR CHAINS:

- **PHD 9857M K 7½** (See page 39)
- **PHDG 9857M K 7½** (See page 47)
- **882M K 7½** (See page 62)
- **HFX 882M K 7½** (See page 71)

RADIUS mm	BASIC WIDTH mm	TRANSVERSAL PITCH mm	INFEED/ OUTFEED LENGTH mm
750	200	195	100

Single track

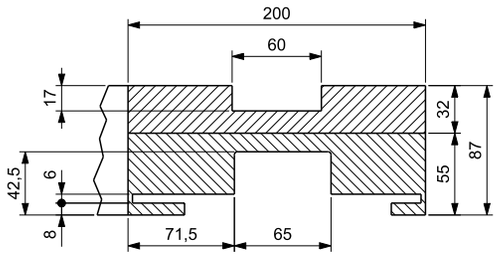

Multi track

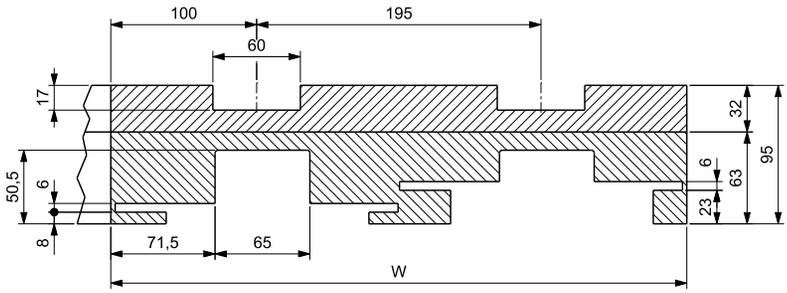

Radius

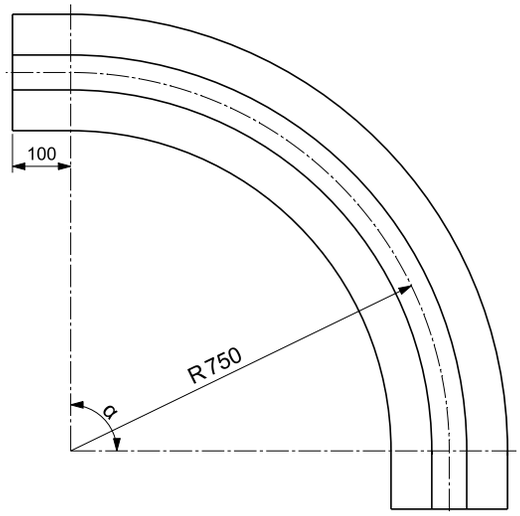

Return guide shoe

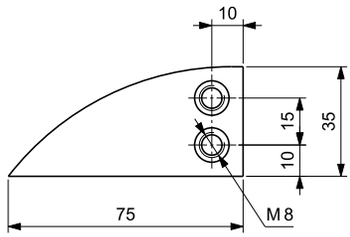

On request, Upper part is available in Self-Lubricating UHMWPE & Oil-filled PA.

PART NUMBER IDENTIFICATION

CURVES	SUPREME -A	NEW e-SLIDE	SUPREME -S
UPPER PART MATERIAL	UHMWPE	High performance Self-lubricating UHMWPE	Oil-filled PA
PART NUMBERS	See table below	Replace "MH" with "MHE" Example: 2 tracks, 90° curve angle, P/N: MHE02EAZ/561	Replace "MH" with "MHP" Example: 2 tracks, 90° curve angle, P/N: MHP02EAZ/561

Curve installation see page 279

Curve material see page 278

N. OF TRACKS	TOTAL WIDTH W mm	PART NUMBER Curve angle α 15°	30°	45°	60°	75°	90°
1	200	**MH01EFW/501**	**MH01EEW/501**	**MH01ECW/501**	**MH01EBW/501**	**MH01ELW/501**	**MH01EAW/501**
2	395	**MH02EFZ/561**	**MH02EEZ/561**	**MH02ECZ/561**	**MH02EBZ/561**	**MH02ELZ/561**	**MH02EAZ/561**
3	590	**MH03EFZ/561**	**MH03EEZ/561**	**MH03ECZ/561**	**MH03EBZ/561**	**MH03ELZ/561**	**MH03EAZ/561**
4	785	**MH04EFZ/561**	**MH04EEZ/561**	**MH04ECZ/561**	**MH04EBZ/561**	**MH04ELZ/561**	**MH04EAZ/561**

NOTE: For custom requests with dimensions different from the standard, please refer to page 318.

 Copyright Regina Catene Calibrate s.p.a. - 2020, All rights reserved

VERSION H 03

SUITABLE FOR CHAINS:

- **PHD 9857M K 7½** (See page 39)
- **PHDG 9857M K 7½** (See page 47)
- **882M K 7½** (See page 62)
- **HFX 882M K 7½** (See page 71)

RADIUS mm	BASIC WIDTH mm	TRANSVERSAL PITCH mm	INFEED/ OUTFEED LENGTH mm
860	214	Single track	-

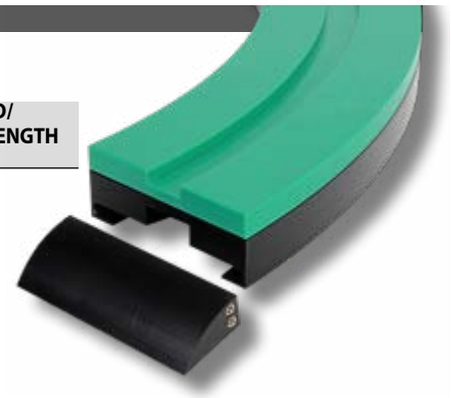

Single track

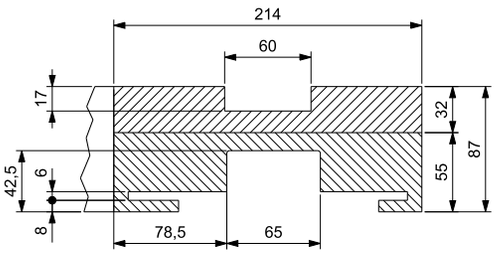

Radius

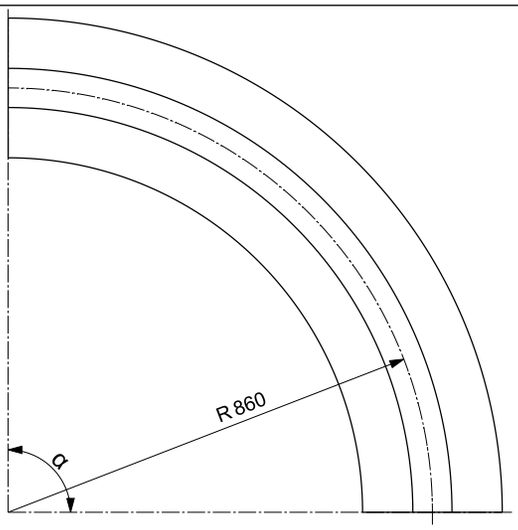

Return guide shoe

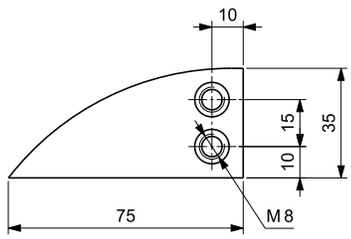

On request, Upper part is available in Self-Lubricating UHMWPE & Oil-filled PA.

PART NUMBER IDENTIFICATION

CURVES	SUPREME -A	NEW e-SLIDE	SUPREME -S
UPPER PART MATERIAL	UHMWPE	High performance Self-lubricating UHMWPE	Oil-filled PA
PART NUMBERS	See table below	Replace "MH" with "MHE" Example: 1 track, 90° curve angle, P/N: MHE01FAW/600	Replace "MH" with "MHP" Example: 1 track, 90° curve angle, P/N: MHP01FAW/600

Curve installation see page 279

Curve material see page 278

N. OF TRACKS	TOTAL WIDTH W mm	PART NUMBER Curve angle α 15°	30°	45°	60°	75°	90°
1	214	**MH01FFW/600**	**MH01FEW/600**	**MH01FCW/600**	**MH01FBW/600**	**MH01FLW/600**	**MH01FAW/600**

NOTE: For custom requests with dimensions different from the standard, please refer to page 318.

Copyright Regina Catene Calibrate s.p.a. - 2020, All rights reserved

VERSION H 04

SUITABLE FOR CHAINS:

- **PHD 9857M K 7½** (See page 39)
- **PHDG 9857M K 7½** (See page 47)
- **882M K 7½** (See page 62)
- **HFX 882M K 7½** (See page 71)

RADIUS mm	BASIC WIDTH mm	TRANSVERSAL PITCH mm	INFEED/ OUFEED LENGTH mm
1000	214	Single track	-

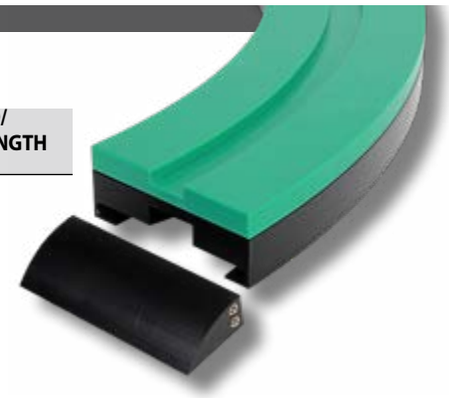

Single track

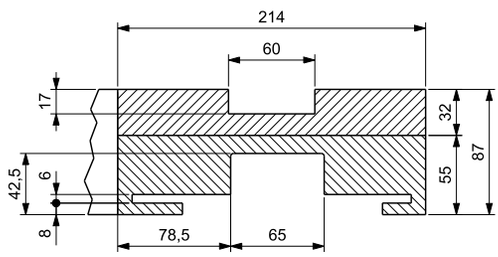

Radius

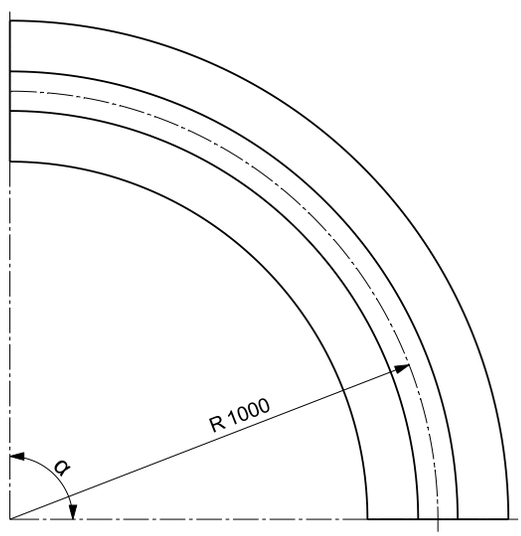

Return guide shoe

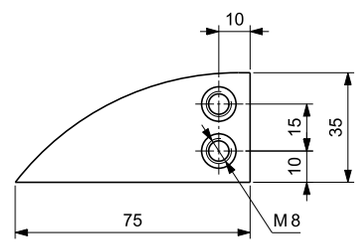

On request, Upper part is available in Self-Lubricating UHMWPE & Oil-filled PA.

PART NUMBER IDENTIFICATION

CURVES	SUPREME -A	NEW e-SLIDE	SUPREME -S
UPPER PART MATERIAL	UHMWPE	High performance Self-lubricating UHMWPE	Oil-filled PA
PART NUMBERS	See table below	Replace "MH" with "MHE" Example: 1 track, 90° curve angle, P/N: MHE01GAW/600	Replace "MH" with "MHP" Example: 1 track, 90° curve angle, P/N: MHP01GAW/600

Curve installation see page 279

Curve material see page 278

N. OF TRACKS	TOTAL WIDTH W mm	PART NUMBER Curve angle α 15°	30°	45°	60°	75°	90°
1	214	**MH01GFW/600**	**MH01GEW/600**	**MH01GCW/600**	**MH01GBW/600**	**MH01GLW/600**	**MH01GAW/600**

NOTE: For custom requests with dimensions different from the standard, please refer to page 318.

 Copyright Regina Catene Calibrate s.p.a. - 2020, All rights reserved

VERSION H 05

SUITABLE FOR CHAINS:
- **882M K 10** (See page 62)
- **HFX 882M K 10** (See page 71)

RADIUS mm	BASIC WIDTH mm	TRANSVERSAL PITCH mm	INFEED/ OUTFEED LENGTH mm
860	290	Single track	-

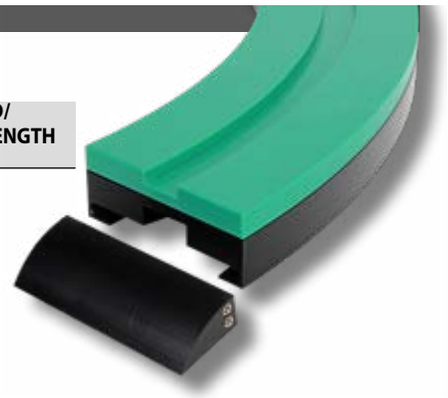

Single track

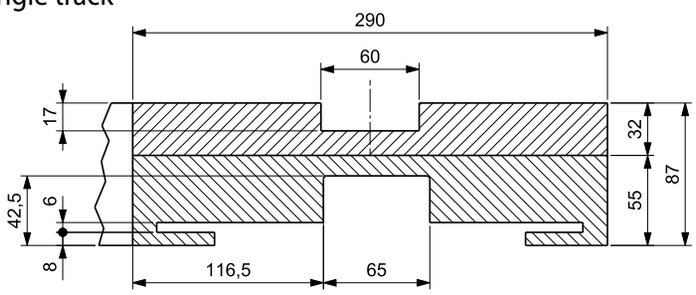

Radius

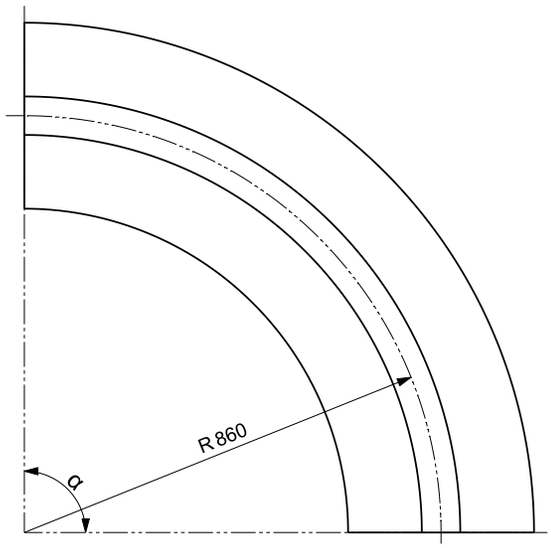

Return guide shoe

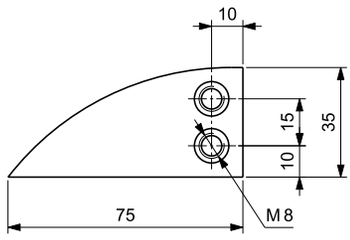

On request, Upper part is available in Self-Lubricating UHMWPE & Oil-filled PA.

PART NUMBER IDENTIFICATION

CURVES	SUPREME -A	NEW e-SLIDE	SUPREME -S
UPPER PART MATERIAL	UHMWPE	High performance Self-lubricating UHMWPE	Oil-filled PA
PART NUMBERS	See table below	Replace "MH" with "MHE" Example: 1 track, 90° curve angle, P/N: MHE01FAW/L00	Replace "MH" with "MHP" Example: 1 track, 90° curve angle, P/N: MHP01FAW/L00

Curve installation see page 279

Curve material see page 278

N. OF TRACKS	TOTAL WIDTH W mm	PART NUMBER Curve angle α 15°	30°	45°	60°	75°	90°
1	290	**MH01FFW/L00**	**MH01FEW/L00**	**MH01FCW/L00**	**MH01FBW/L00**	**MH01FLW/L00**	**MH01FAW/L00**

NOTE: For custom requests with dimensions different from the standard, please refer to page 318.

Copyright Regina Catene Calibrate s.p.a. - 2020, All rights reserved

VERSION H 06

SUITABLE FOR CHAINS:
- **882M K 12** (See page 62)
- **HFX 882M K 12** (See page 71)

RADIUS mm	BASIC WIDTH mm	TRANSVERSAL PITCH mm	INFEED/ OUTFEED LENGTH mm
860	340	Single track	-

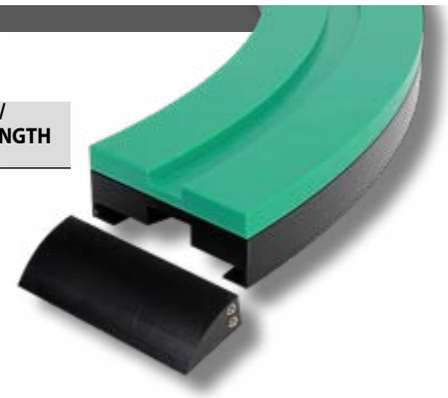

Single track

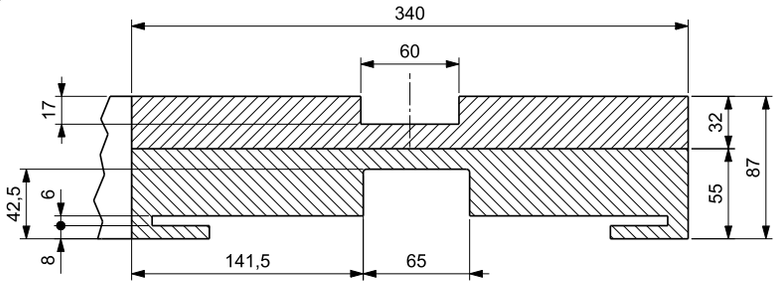

Radius

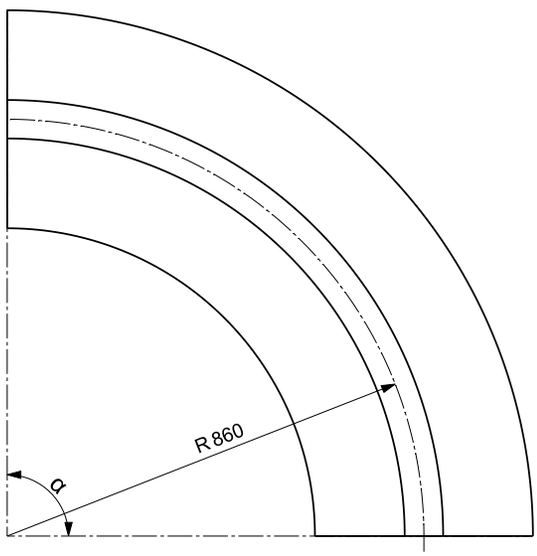

Return guide shoe

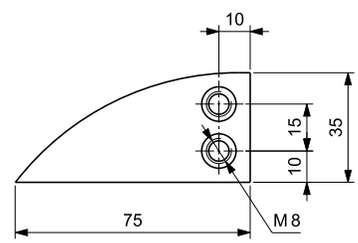

On request, Upper part is available in Self-Lubricating UHMWPE & Oil-filled PA.

PART NUMBER IDENTIFICATION

CURVES	SUPREME -A	NEW e-SLIDE	SUPREME -S
UPPER PART MATERIAL	UHMWPE	High performance Self-lubricating UHMWPE	Oil-filled PA
PART NUMBERS	See table below	Replace "MH" with "MHE" Example: 1 track, 90° curve angle, P/N: MHE01FAW/J00	Replace "MH" with "MHP" Example: 1 track, 90° curve angle, P/N: MHP01FAW/J00

Curve installation see page 279

Curve material see page 278

N. OF TRACKS	TOTAL WIDTH W mm	PART NUMBER Curve angle α 15°	30°	45°	60°	75°	90°
1	340	**MH01FFW/J00**	**MH01FEW/J00**	**MH01FCW/J00**	**MH01FBW/J00**	**MH01FLW/J00**	**MH01FAW/J00**

NOTE: For custom requests with dimensions different from the standard, please refer to page 318.

 Copyright Regina Catene Calibrate s.p.a. - 2020, All rights reserved

VERSION L 01

SUITABLE FOR CHAINS:
- LBP 882M K 7½ (See page 109)

RADIUS mm	BASIC WIDTH mm	TRANSVERSAL PITCH mm	INFEED/ OUTFEED LENGTH mm
860	214	Single track	-

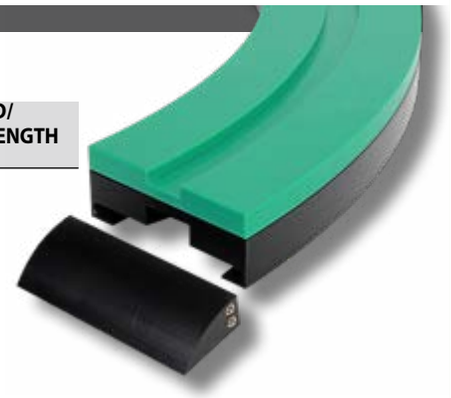

Single track

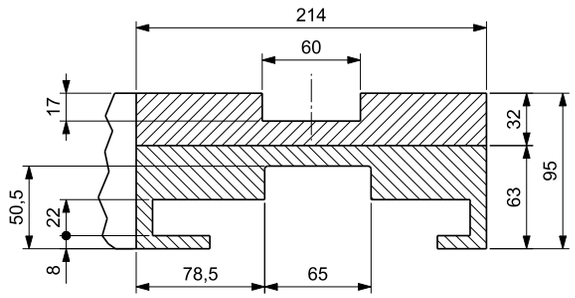

Radius

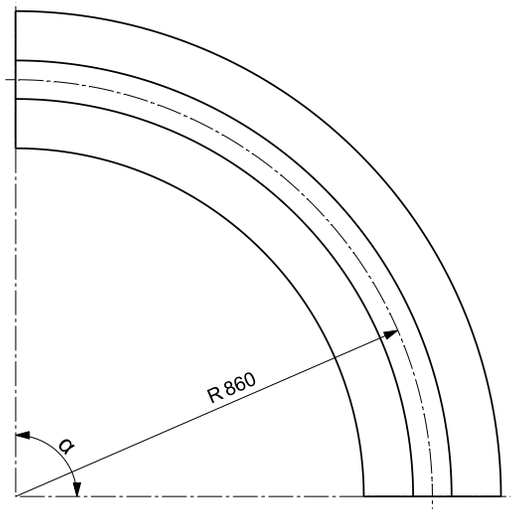

Return guide shoe

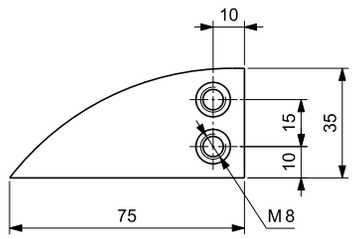

On request, Upper part is available in Self-Lubricating UHMWPE & Oil-filled PA.

PART NUMBER IDENTIFICATION

CURVES	SUPREME -A	NEW e-SLIDE	SUPREME -S
UPPER PART MATERIAL	UHMWPE	High performance Self-lubricating UHMWPE	Oil-filled PA
PART NUMBERS	See table below	Replace "ML" with "MLE" Example: 1 track, 90° curve angle, P/N: MLE01FAZ/600	Replace "ML" with "MLP" Example: 1 track, 90° curve angle, P/N: MLP01FAZ/600

Curve installation see page 279

Curve material see page 278

N. OF TRACKS	TOTAL WIDTH W mm	PART NUMBER Curve angle α 15°	30°	45°	60°	75°	90°
1	214	**ML01FFZ/600**	**ML01FEZ/600**	**ML01FCZ/600**	**ML01FBZ/600**	**ML01FLZ/600**	**ML01FAZ/600**

NOTE: For custom requests with dimensions different from the standard, please refer to page 318.

Copyright Regina Catene Calibrate s.p.a. - 2020, All rights reserved

VERSION L 02

SUITABLE FOR CHAINS:
- LBP 882M K 10 (See page 109)

RADIUS mm	BASIC WIDTH mm	TRANSVERSAL PITCH mm	INFEED/ OUTFEED LENGTH mm
860	290	Single track	-

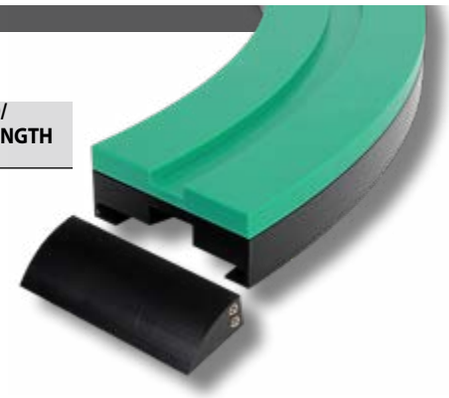

Single track

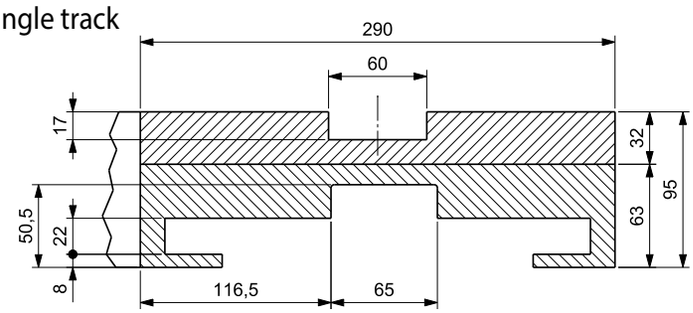

Radius

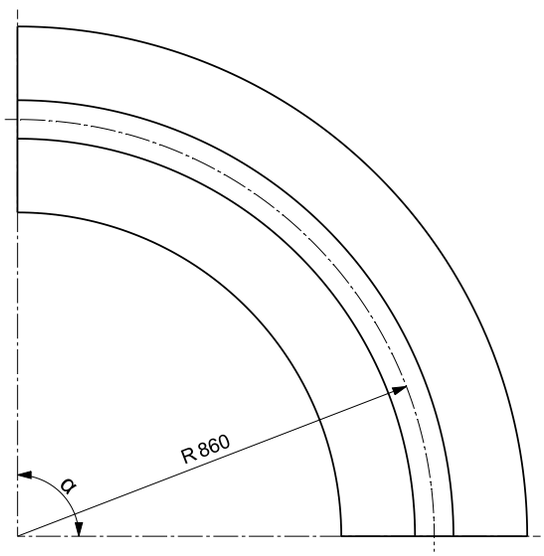

Return guide shoe

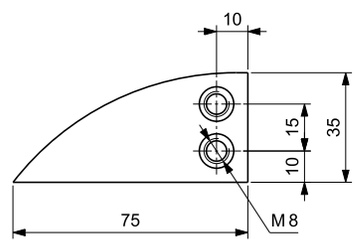

On request, Upper part is available in Self-Lubricating UHMWPE & Oil-filled PA.

PART NUMBER IDENTIFICATION			
CURVES	SUPREME -A	NEW e-SLIDE	SUPREME -S
UPPER PART MATERIAL	UHMWPE	High performance Self-lubricating UHMWPE	Oil-filled PA
PART NUMBERS	See table below	Replace "ML" with "MLE" Example: 1 track, 90° curve angle, P/N: MLE01FAZ/L00	Replace "ML" with "MLP" Example: 1 track, 90° curve angle, P/N: MLP01FAZ/L00

Curve installation see page 279

Curve material see page 278

N. OF TRACKS	TOTAL WIDTH W mm	PART NUMBER Curve angle α 15°	30°	45°	60°	75°	90°
1	290	**ML01FFZ/L00**	**ML01FEZ/L00**	**ML01FCZ/L00**	**ML01FBZ/L00**	**ML01FLZ/L00**	**ML01FAZ/L00**

NOTE: For custom requests with dimensions different from the standard, please refer to page 318.

 Copyright Regina Catene Calibrate s.p.a. - 2020, All rights reserved

VERSION L 03

SUITABLE FOR CHAINS:
- LBP 882M K 12 (See page 109)

RADIUS mm	BASIC WIDTH mm	TRANSVERSAL PITCH mm	INFEED/ OUTFEED LENGTH mm
860	340	Single track	-

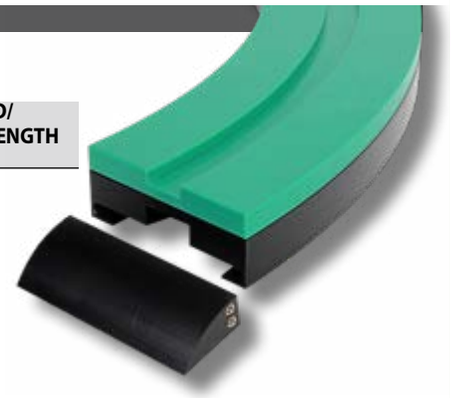

Single track

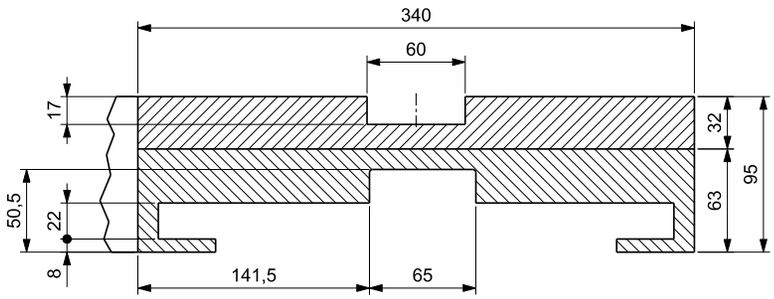

Radius

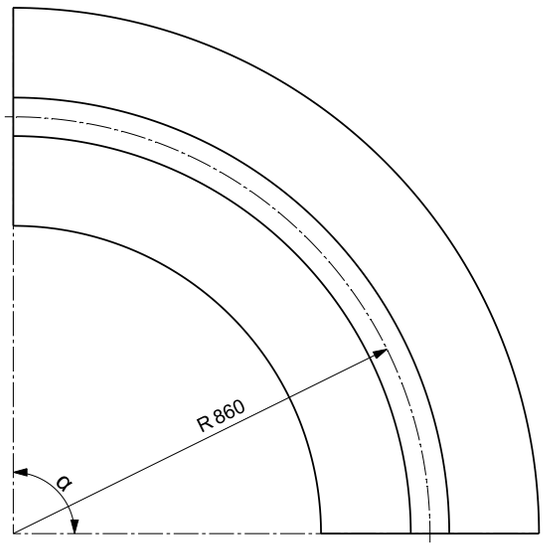

Return guide shoe

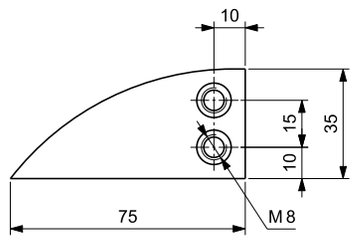

On request, Upper part is available in Self-Lubricating UHMWPE & Oil-filled PA.

PART NUMBER IDENTIFICATION

CURVES	SUPREME -A	NEW e-SLIDE	SUPREME -S
UPPER PART MATERIAL	UHMWPE	High performance Self-lubricating UHMWPE	Oil-filled PA
PART NUMBERS	See table below	Replace "ML" with "MLE" Example: 1 track, 90° curve angle, P/N: MLE01FAZ/J00	Replace "ML" with "MLP" Example: 1 track, 90° curve angle, P/N: MLP01FAZ/J00

Curve installation see page 279

Curve material see page 278

N. OF TRACKS	TOTAL WIDTH W mm	PART NUMBER Curve angle α 15°	30°	45°	60°	75°	90°
1	340	**ML01FFZ/J00**	**ML01FEZ/J00**	**ML01FCZ/J00**	**ML01FBZ/J00**	**ML01FLZ/J00**	**ML01FAZ/J00**

NOTE: For custom requests with dimensions different from the standard, please refer to page 318.

Copyright Regina Catene Calibrate s.p.a. - 2020, All rights reserved

VERSION M 01

SUITABLE FOR CHAINS:
- **782M K 83,8** (See page 247)
- **783M K 83,8** (See page 247)

RADIUS mm	BASIC WIDTH mm	TRANSVERSAL PITCH mm	INFEED/ OUTFEED LENGTH mm
500	100	85	-

Single track

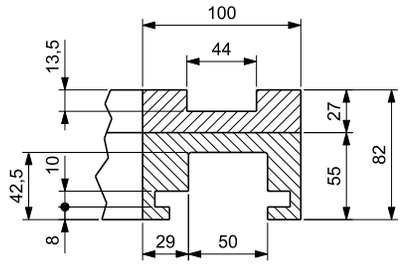

Multi track

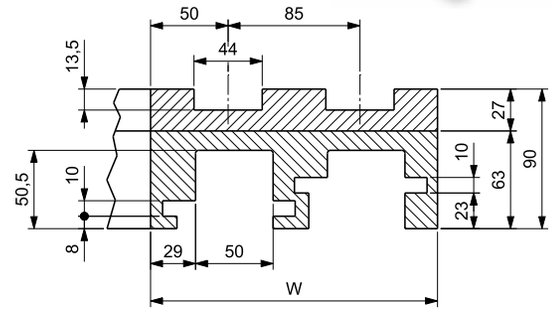

Radius

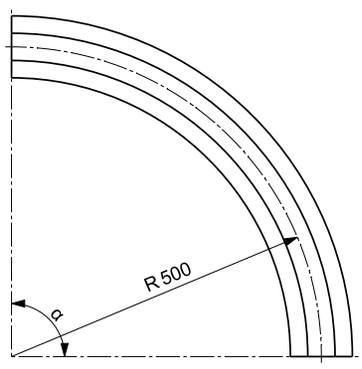

Return guide shoe

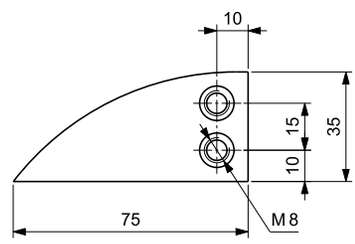

On request, Upper part is available in Self-Lubricating UHMWPE & Oil-filled PA.

PART NUMBER IDENTIFICATION

CURVES	SUPREME -A	NEW e-SLIDE	SUPREME -S
UPPER PART MATERIAL	UHMWPE	High performance Self-lubricating UHMWPE	Oil-filled PA
PART NUMBERS	See table below	Replace "MM" with "MME" Example: 2 tracks, 90° curve angle, P/N: MME02AAY/110	Replace "MM" with "MMP" Example: 2 tracks, 90° curve angle, P/N: MMP02AAY/110

Curve installation see page 279

Curve material see page 278

N. OF TRACKS	TOTAL WIDTH W mm	PART NUMBER Curve angle α 15°	30°	45°	60°	75°	90°
1	100	**MM01AFX/100**	**MM01AEX/100**	**MM01ACX/100**	**MM01ABX/100**	**MM01ALX/100**	**MM01AAX/100**
2	185	**MM02AFY/110**	**MM02AEY/110**	**MM02ACY/110**	**MM02ABY/110**	**MM02ALY/110**	**MM02AAY/110**
3	270	**MM03AFY/110**	**MM03AEY/110**	**MM03ACY/110**	**MM03ABY/110**	**MM03ALY/110**	**MM03AAY/110**
4	355	**MM04AFY/110**	**MM04AEY/110**	**MM04ACY/110**	**MM04ABY/110**	**MM04ALY/110**	**MM04AAY/110**
5	440	**MM05AFY/110**	**MM05AEY/110**	**MM05ACY/110**	**MM05ABY/110**	**MM05ALY/110**	**MM05AAY/110**
6	525	**MM06AFY/110**	**MM06AEY/110**	**MM06ACY/110**	**MM06ABY/110**	**MM06ALY/110**	**MM06AAY/110**

NOTE: For custom requests with dimensions different from the standard, please refer to page 318.

 Copyright Regina Catene Calibrate s.p.a. - 2020, All rights reserved

VERSION M 02

SUITABLE FOR CHAINS:
- **782M K 83,8** (See page 247)
- **783M K 83,8** (See page 247)

RADIUS mm	BASIC WIDTH mm	TRANSVERSAL PITCH mm	INFEED/ OUTFEED LENGTH mm
500	100	85	100

Single track

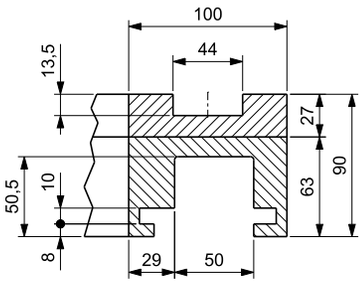

Multi track

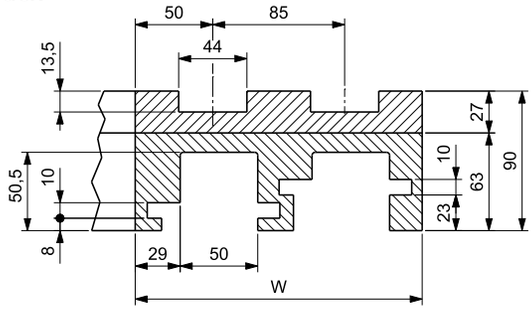

Radius

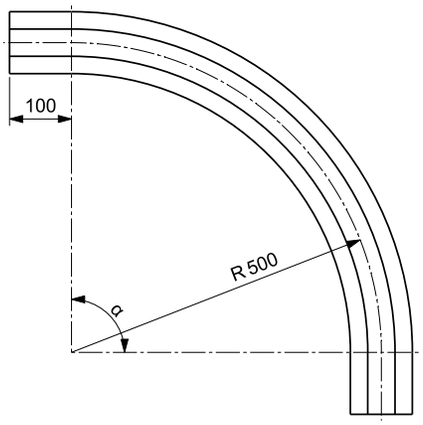

Return guide shoe

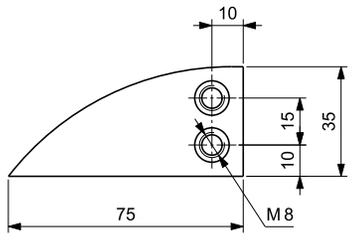

On request, Upper part is available in Self-Lubricating UHMWPE & Oil-filled PA.

PART NUMBER IDENTIFICATION

CURVES	SUPREME -A	NEW e-SLIDE	SUPREME -S
UPPER PART MATERIAL	UHMWPE	High performance Self-lubricating UHMWPE	Oil-filled PA
PART NUMBERS	See table below	Replace "MM" with "MME" Example: 2 tracks, 90° curve angle, P/N: MME02AAY/111	Replace "MM" with "MMP" Example: 2 tracks, 90° curve angle, P/N: MMP02AAY/111

Curve installation see page 279

Curve material see page 278

N. OF TRACKS	TOTAL WIDTH W mm	PART NUMBER Curve angle α 15°	30°	45°	60°	75°	90°
1	100	**MM01AFY/101**	**MM01AEY/101**	**MM01ACY/101**	**MM01ABY/101**	**MM01ALY/101**	**MM01AAY/101**
2	185	**MM02AFY/111**	**MM02AEY/111**	**MM02ACY/111**	**MM02ABY/111**	**MM02ALY/111**	**MM02AAY/111**
3	270	**MM03AFY/111**	**MM03AEY/111**	**MM03ACY/111**	**MM03ABY/111**	**MM03ALY/111**	**MM03AAY/111**
4	355	**MM04AFY/111**	**MM04AEY/111**	**MM04ACY/111**	**MM04ABY/111**	**MM04ALY/111**	**MM04AAY/111**
5	440	**MM05AFY/111**	**MM05AEY/111**	**MM05ACY/111**	**MM05ABY/111**	**MM05ALY/111**	**MM05AAY/111**
6	525	**MM06AFY/111**	**MM06AEY/111**	**MM06ACY/111**	**MM06ABY/111**	**MM06ALY/111**	**MM06AAY/111**

NOTE: For custom requests with dimensions different from the standard, please refer to page 318.

Copyright Regina Catene Calibrate s.p.a. - 2020, All rights reserved

VERSION M 03

SUITABLE FOR CHAINS:
- **782M K 83,8** (See page 247)
- **783M K 83,8** (See page 247)

RADIUS mm	BASIC WIDTH mm	TRANSVERSAL PITCH mm	INFEED/ OUTFEED LENGTH mm
500	111	85	100

Single track

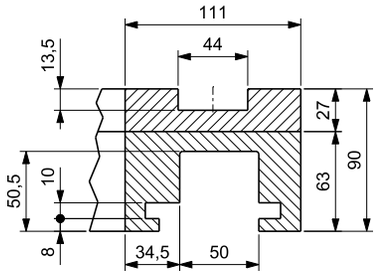

Multi track

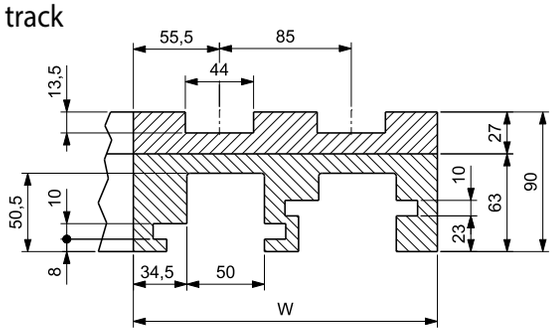

Radius

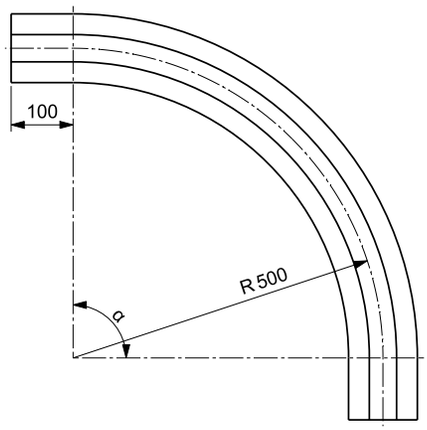

Return guide shoe

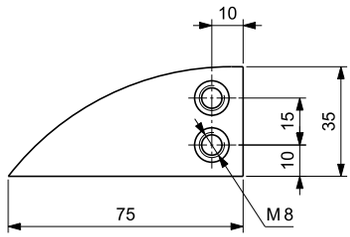

On request, Upper part is available in Self-Lubricating UHMWPE & Oil-filled PA.

PART NUMBER IDENTIFICATION

CURVES	SUPREME -A	NEW e-SLIDE	SUPREME -S
UPPER PART MATERIAL	UHMWPE	High performance Self-lubricating UHMWPE	Oil-filled PA
PART NUMBERS	See table below	Replace "MM" with "MME" Example: 2 tracks, 90° curve angle, P/N: MME02AAY/311	Replace "MM" with "MMP" Example: 2 tracks, 90° curve angle, P/N: MMP02AAY/311

Curve installation see page 279

Curve material see page 278

N. OF TRACKS	TOTAL WIDTH W mm	PART NUMBER Curve angle α 15°	30°	45°	60°	75°	90°
1	111	**MM01AFY/301**	**MM01AEY/301**	**MM01ACY/301**	**MM01ABY/301**	**MM01ALY/301**	**MM01AAY/301**
2	196	**MM02AFY/311**	**MM02AEY/311**	**MM02ACY/311**	**MM02ABY/311**	**MM02ALY/311**	**MM02AAY/311**
3	281	**MM03AFY/311**	**MM03AEY/311**	**MM03ACY/311**	**MM03ABY/311**	**MM03ALY/311**	**MM03AAY/311**
4	366	**MM04AFY/311**	**MM04AEY/311**	**MM04ACY/311**	**MM04ABY/311**	**MM04ALY/311**	**MM04AAY/311**
5	451	**MM05AFY/311**	**MM05AEY/311**	**MM05ACY/311**	**MM05ABY/311**	**MM05ALY/311**	**MM05AAY/311**
6	536	**MM06AFY/311**	**MM06AEY/311**	**MM06ACY/311**	**MM06ABY/311**	**MM06ALY/311**	**MM06AAY/311**

NOTE: For custom requests with dimensions different from the standard, please refer to page 318.

 Copyright Regina Catene Calibrate s.p.a. - 2020, All rights reserved

VERSION M 04

SUITABLE FOR CHAINS:
- **782M K 83,8** (See page 247)
- **783M K 83,8** (See page 247)

RADIUS mm	BASIC WIDTH mm	TRANSVERSAL PITCH mm	INFEED/ OUTFEED LENGTH mm
750	100	85	100

Single track

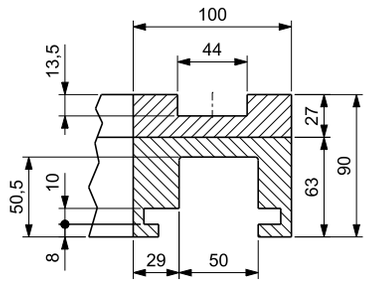

Multi track

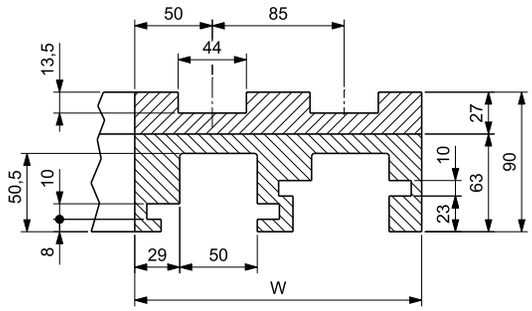

Radius

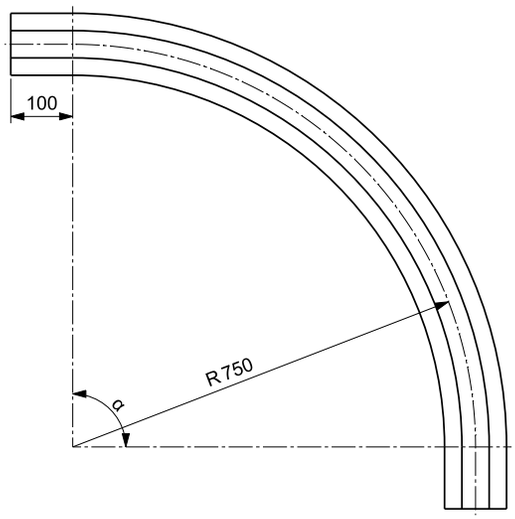

Return guide shoe

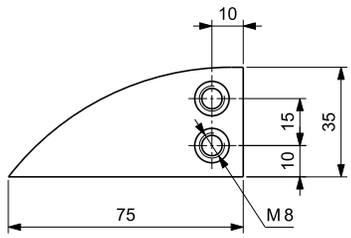

On request, Upper part is available in Self-Lubricating UHMWPE & Oil-filled PA.

PART NUMBER IDENTIFICATION

CURVES	SUPREME -A	NEW e-SLIDE	SUPREME -S
UPPER PART MATERIAL	UHMWPE	High performance Self-lubricating UHMWPE	Oil-filled PA
PART NUMBERS	See table below	Replace "MM" with "MME" Example: 2 tracks, 90° curve angle, P/N: MME02EAY/111	Replace "MM" with "MMP" Example: 2 tracks, 90° curve angle, P/N: MMP02EAY/111

Curve installation see page 279

Curve material see page 278

N. OF TRACKS	TOTAL WIDTH W mm	PART NUMBER Curve angle α 15°	30°	45°	60°	75°	90°
1	100	**MM01EFY/101**	**MM01EEY/101**	**MM01ECY/101**	**MM01EBY/101**	**MM01ELY/101**	**MM01EAY/101**
2	185	**MM02EFY/111**	**MM02EEY/111**	**MM02ECY/111**	**MM02EBY/111**	**MM02ELY/111**	**MM02EAY/111**
3	270	**MM03EFY/111**	**MM03EEY/111**	**MM03ECY/111**	**MM03EBY/111**	**MM03ELY/111**	**MM03EAY/111**
4	355	**MM04EFY/111**	**MM04EEY/111**	**MM04ECY/111**	**MM04EBY/111**	**MM04ELY/111**	**MM04EAY/111**
5	440	**MM05EFY/111**	**MM05EEY/111**	**MM05ECY/111**	**MM05EBY/111**	**MM05ELY/111**	**MM05EAY/111**
6	525	**MM06EFY/111**	**MM06EEY/111**	**MM06ECY/111**	**MM06EBY/111**	**MM06ELY/111**	**MM06EAY/111**

NOTE: For custom requests with dimensions different from the standard, please refer to page 318.

Copyright Regina Catene Calibrate s.p.a. - 2020, All rights reserved

VERSION M 05

SUITABLE FOR CHAINS:
- **782M K 83,8** (See page 247)
- **783M K 83,8** (See page 247)

RADIUS mm	BASIC WIDTH mm	TRANSVERSAL PITCH mm	INFEED/ OUTFEED LENGTH mm
750	111	85	100

Single track

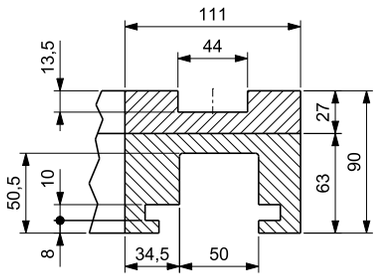

Multi track

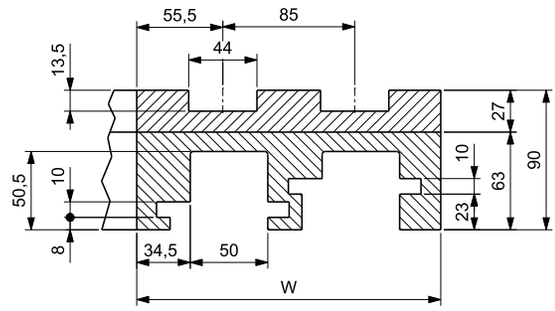

Radius

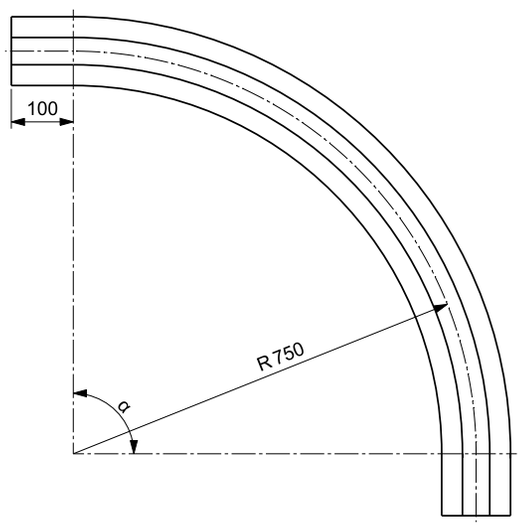

Return guide shoe

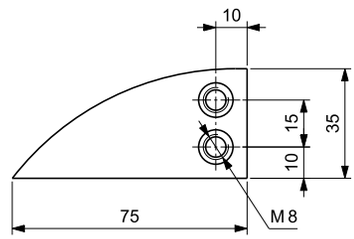

On request, Upper part is available in Self-Lubricating UHMWPE & Oil-filled PA.

PART NUMBER IDENTIFICATION

CURVES	SUPREME -A	NEW e-SLIDE	SUPREME -S
UPPER PART MATERIAL	UHMWPE	High performance Self-lubricating UHMWPE	Oil-filled PA
PART NUMBERS	See table below	Replace "MM" with "MME" Example: 2 tracks, 90° curve angle, P/N: MME02EAY/311	Replace "MM" with "MMP" Example: 2 tracks, 90° curve angle, P/N: MMP02EAY/311

Curve installation see page 279

Curve material see page 278

N. OF TRACKS	TOTAL WIDTH W mm	PART NUMBER Curve angle α 15°	30°	45°	60°	75°	90°
1	111	**MM01EFY/301**	**MM01EEY/301**	**MM01ECY/301**	**MM01EBY/301**	**MM01ELY/301**	**MM01EAY/301**
2	196	**MM02EFY/311**	**MM02EEY/311**	**MM02ECY/311**	**MM02EBY/311**	**MM02ELY/311**	**MM02EAY/311**
3	281	**MM03EFY/311**	**MM03EEY/311**	**MM03ECY/311**	**MM03EBY/311**	**MM03ELY/311**	**MM03EAY/311**
4	366	**MM04EFY/311**	**MM04EEY/311**	**MM04ECY/311**	**MM04EBY/311**	**MM04ELY/311**	**MM04EAY/311**
5	451	**MM05EFY/311**	**MM05EEY/311**	**MM05ECY/311**	**MM05EBY/311**	**MM05ELY/311**	**MM05EAY/311**
6	536	**MM06EFY/311**	**MM06EEY/311**	**MM06ECY/311**	**MM06EBY/311**	**MM06ELY/311**	**MM06EAY/311**

NOTE: For custom requests with dimensions different from the standard, please refer to page 318.

 Copyright Regina Catene Calibrate s.p.a. - 2020, All rights reserved

VERSION M 06

SUITABLE FOR CHAINS:
- **782M K 83,8** (See page 247)
- **783M K 83,8** (See page 247)

RADIUS mm	BASIC WIDTH mm	TRANSVERSAL PITCH mm	INFEED/ OUTFEED LENGTH mm
1000	100	85	-

Single track

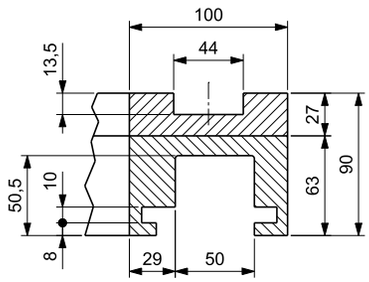

Multi track

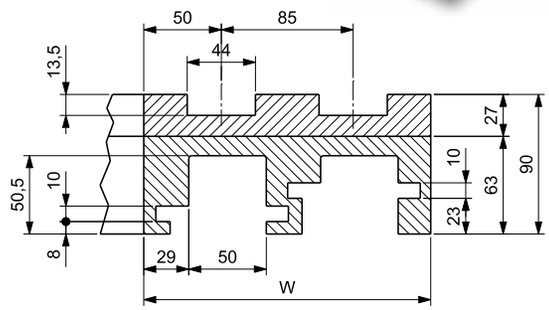

Radius

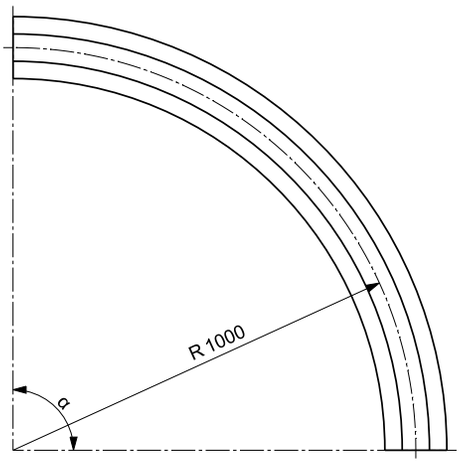

Return guide shoe

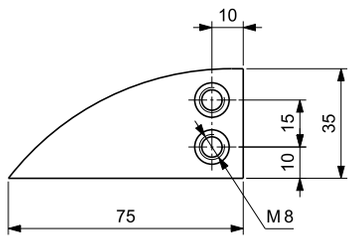

On request, Upper part is available in Self-Lubricating UHMWPE & Oil-filled PA.

PART NUMBER IDENTIFICATION

CURVES	SUPREME -A	NEW e-SLIDE	SUPREME -S
UPPER PART MATERIAL	UHMWPE	High performance Self-lubricating UHMWPE	Oil-filled PA
PART NUMBERS	See table below	Replace "MM" with "MME" Example: 2 tracks, 90° curve angle, P/N: MME02GAY/110	Replace "MM" with "MMP" Example: 2 tracks, 90° curve angle, P/N: MMP02GAY/110

Curve installation see page 279

Curve material see page 278

N. OF TRACKS	TOTAL WIDTH W mm	PART NUMBER Curve angle α 15°	30°	45°	60°	75°	90°
1	100	**MM01GFY/100**	**MM01GEY/100**	**MM01GCY/100**	**MM01GBY/100**	**MM01GLY/100**	**MM01GAY/100**
2	185	**MM02GFY/110**	**MM02GEY/110**	**MM02GCY/110**	**MM02GBY/110**	**MM02GLY/110**	**MM02GAY/110**
3	270	**MM03GFY/110**	**MM03GEY/110**	**MM03GCY/110**	**MM03GBY/110**	**MM03GLY/110**	**MM03GAY/110**
4	355	**MM04GFY/110**	**MM04GEY/110**	**MM04GCY/110**	**MM04GBY/110**	**MM04GLY/110**	**MM04GAY/110**

NOTE: For custom requests with dimensions different from the standard, please refer to page 318.

Copyright Regina Catene Calibrate s.p.a. - 2020, All rights reserved

VERSION U 01

SUITABLE FOR CHAINS:
-793M K 83,8 (See page 249)

RADIUS mm	BASIC WIDTH mm	TRANSVERSAL PITCH mm	INFEED/ OUTFEED LENGTH mm
500	100	85	-

Single track

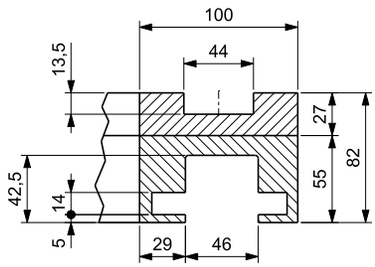

Multi track

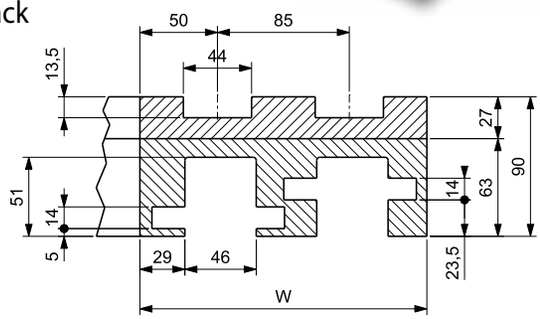

Radius

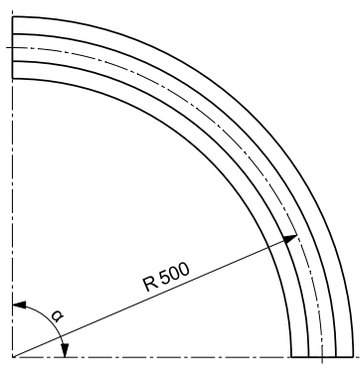

Return guide shoe

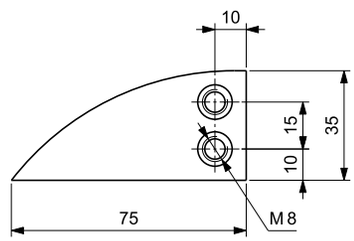

On request, Upper part is available in Self-Lubricating UHMWPE & Oil-filled PA.

PART NUMBER IDENTIFICATION

CURVES	SUPREME -A	NEW e-SLIDE	SUPREME -S
UPPER PART MATERIAL	UHMWPE	High performance Self-lubricating UHMWPE	Oil-filled PA
PART NUMBERS	See table below	Replace "MU" with "MUE" Example: 2 tracks, 90° curve angle, P/N: MUE02AAY/110	Replace "MU" with "MUP" Example: 2 tracks, 90° curve angle, P/N: MUP02AAY/110

Curve installation see page 279

Curve material see page 278

N. OF TRACKS	TOTAL WIDTH W mm	PART NUMBER Curve angle α 15°	30°	45°	60°	75°	90°
1	100	**MU01AFX/100**	**MU01AEX/100**	**MU01ACX/100**	**MU01ABX/100**	**MU01ALX/100**	**MU01AAX/100**
2	185	**MU02AFY/110**	**MU02AEY/110**	**MU02ACY/110**	**MU02ABY/110**	**MU02ALY/110**	**MU02AAY/110**
3	270	**MU03AFY/110**	**MU03AEY/110**	**MU03ACY/110**	**MU03ABY/110**	**MU03ALY/110**	**MU03AAY/110**
4	355	**MU04AFY/110**	**MU04AEY/110**	**MU04ACY/110**	**MU04ABY/110**	**MU04ALY/110**	**MU04AAY/110**
5	440	**MU05AFY/110**	**MU05AEY/110**	**MU05ACY/110**	**MU05ABY/110**	**MU05ALY/110**	**MU05AAY/110**
6	525	**MU06AFY/110**	**MU06AEY/110**	**MU06ACY/110**	**MU06ABY/110**	**MU06ALY/110**	**MU06AAY/110**

NOTE: For custom requests with dimensions different from the standard, please refer to page 318.

 Copyright Regina Catene Calibrate s.p.a. - 2020, All rights reserved

VERSION U 02

SUITABLE FOR CHAINS:
-793M K 83,8 (See page 249)

RADIUS mm	BASIC WIDTH mm	TRANSVERSAL PITCH mm	INFEED/ OUTFEED LENGTH mm
500	100	85	100

Single track

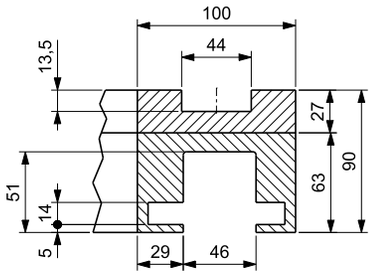

Multi track

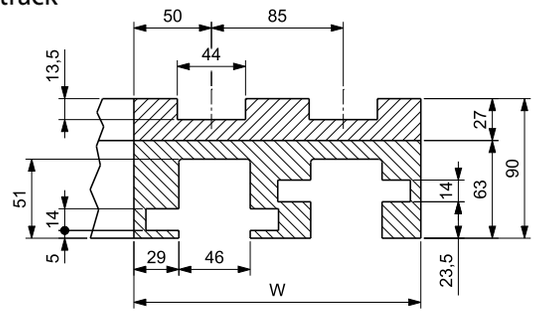

Radius

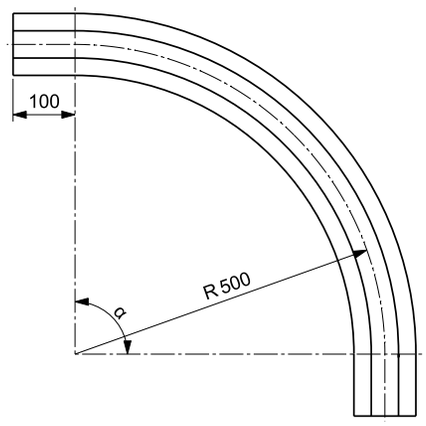

Return guide shoe

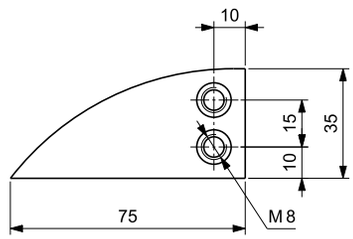

On request, Upper part is available in Self-Lubricating UHMWPE & Oil-filled PA.

PART NUMBER IDENTIFICATION

CURVES	SUPREME -A	NEW e-SLIDE	SUPREME -S
UPPER PART MATERIAL	UHMWPE	High performance Self-lubricating UHMWPE	Oil-filled PA
PART NUMBERS	See table below	Replace "MU" with "MUE" Example: 2 tracks, 90° curve angle, P/N: MUE02AAY/111	Replace "MU" with "MUP" Example: 2 tracks, 90° curve angle, P/N: MUP02AAY/111

Curve installation see page 279

Curve material see page 278

N. OF TRACKS	TOTAL WIDTH W mm	PART NUMBER Curve angle α 15°	30°	45°	60°	75°	90°
1	100	**MU01AFY/101**	**MU01AEY/101**	**MU01ACY/101**	**MU01ABY/101**	**MU01ALY/101**	**MU01AAY/101**
2	185	**MU02AFY/111**	**MU02AEY/111**	**MU02ACY/111**	**MU02ABY/111**	**MU02ALY/111**	**MU02AAY/111**
3	270	**MU03AFY/111**	**MU03AEY/111**	**MU03ACY/111**	**MU03ABY/111**	**MU03ALY/111**	**MU03AAY/111**
4	355	**MU04AFY/111**	**MU04AEY/111**	**MU04ACY/111**	**MU04ABY/111**	**MU04ALY/111**	**MU04AAY/111**
5	440	**MU05AFY/111**	**MU05AEY/111**	**MU05ACY/111**	**MU05ABY/111**	**MU05ALY/111**	**MU05AAY/111**
6	525	**MU06AFY/111**	**MU06AEY/111**	**MU06ACY/111**	**MU06ABY/111**	**MU06ALY/111**	**MU06AAY/111**

NOTE: For custom requests with dimensions different from the standard, please refer to page 318.

Copyright Regina Catene Calibrate s.p.a. - 2020, All rights reserved

VERSION U 03

SUITABLE FOR CHAINS:
-793M K 83,8 (See page 249)

RADIUS mm	BASIC WIDTH mm	TRANSVERSAL PITCH mm	INFEED/ OUTFEED LENGTH mm
500	111	85	100

Single track

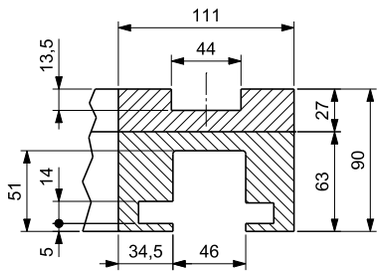

Multi track

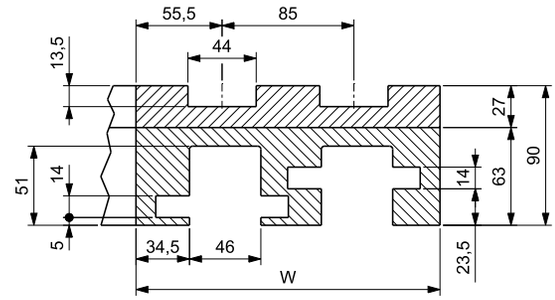

Radius

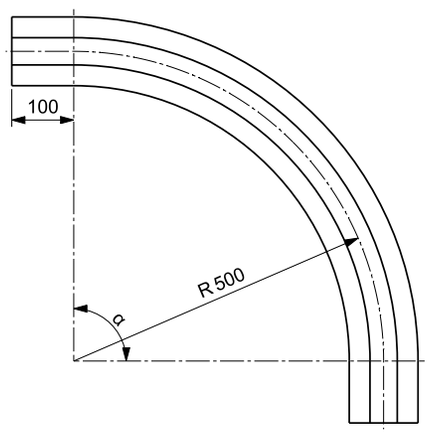

Return guide shoe

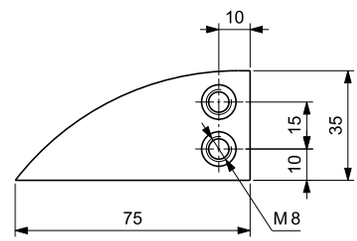

On request, Upper part is available in Self-Lubricating UHMWPE & Oil-filled PA.

PART NUMBER IDENTIFICATION

CURVES	SUPREME -A	NEW e-SLIDE	SUPREME -S
UPPER PART MATERIAL	UHMWPE	High performance Self-lubricating UHMWPE	Oil-filled PA
PART NUMBERS	See table below	Replace "MU" with "MUE" Example: 2 tracks, 90° curve angle, P/N: MUE02AAY/311	Replace "MU" with "MUP" Example: 2 tracks, 90° curve angle, P/N: MUP02AAY/311

Curve installation see page 279

Curve material see page 278

N. OF TRACKS	TOTAL WIDTH W mm	PART NUMBER Curve angle α 15°	30°	45°	60°	75°	90°
1	111	**MU01AFY/301**	**MU01AEY/301**	**MU01ACY/301**	**MU01ABY/301**	**MU01ALY/301**	**MU01AAY/301**
2	196	**MU02AFY/311**	**MU02AEY/311**	**MU02ACY/311**	**MU02ABY/311**	**MU02ALY/311**	**MU02AAY/311**
3	281	**MU03AFY/311**	**MU03AEY/311**	**MU03ACY/311**	**MU03ABY/311**	**MU03ALY/311**	**MU03AAY/311**
4	366	**MU04AFY/311**	**MU04AEY/311**	**MU04ACY/311**	**MU04ABY/311**	**MU04ALY/311**	**MU04AAY/311**
5	451	**MU05AFY/311**	**MU05AEY/311**	**MU05ACY/311**	**MU05ABY/311**	**MU05ALY/311**	**MU05AAY/311**
6	536	**MU06AFY/311**	**MU06AEY/311**	**MU06ACY/311**	**MU06ABY/311**	**MU06ALY/311**	**MU06AAY/311**

NOTE: For custom requests with dimensions different from the standard, please refer to page 318.

 Copyright Regina Catene Calibrate s.p.a. - 2020, All rights reserved

VERSION U 04

SUITABLE FOR CHAINS:
-793M K 83,8 (See page 249)

RADIUS mm	BASIC WIDTH mm	TRANSVERSAL PITCH mm	INFEED/ OUTFEED LENGTH mm
750	100	85	100

Single track

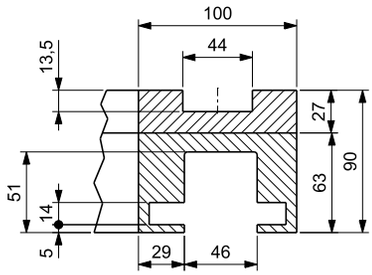

Multi track

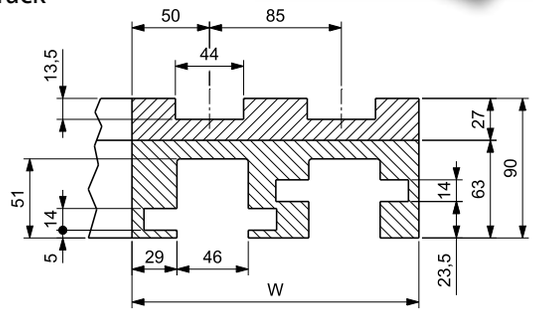

Radius

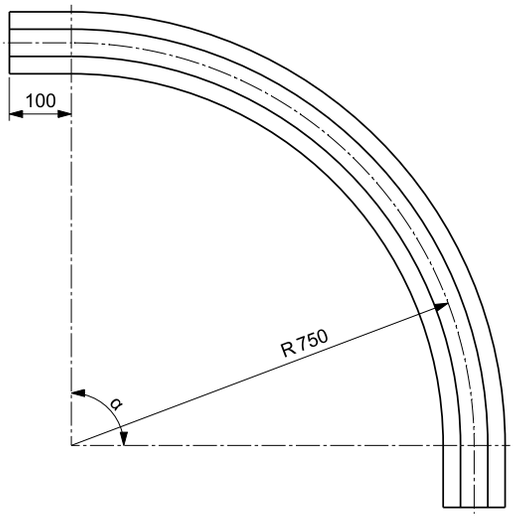

Return guide shoe

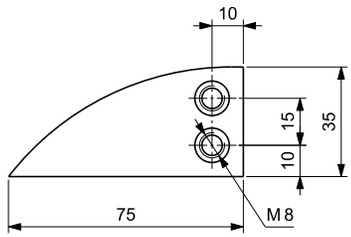

On request, Upper part is available in Self-Lubricating UHMWPE & Oil-filled PA.

PART NUMBER IDENTIFICATION

CURVES	SUPREME -A	NEW e-SLIDE	SUPREME -S
UPPER PART MATERIAL	UHMWPE	High performance Self-lubricating UHMWPE	Oil-filled PA
PART NUMBERS	See table below	Replace "MU" with "MUE" Example: 2 tracks, 90° curve angle, P/N: MUE02EAY/111	Replace "MU" with "MUP" Example: 2 tracks, 90° curve angle, P/N: MUP02EAY/111

Curve installation see page 279

Curve material see page 278

N. OF TRACKS	TOTAL WIDTH W mm	PART NUMBER Curve angle α 15°	30°	45°	60°	75°	90°
1	100	**MU01EFY/101**	**MU01EEY/101**	**MU01ECY/101**	**MU01EBY/101**	**MU01ELY/101**	**MU01EAY/101**
2	185	**MU02EFY/111**	**MU02EEY/111**	**MU02ECY/111**	**MU02EBY/111**	**MU02ELY/111**	**MU02EAY/111**
3	270	**MU03EFY/111**	**MU03EEY/111**	**MU03ECY/111**	**MU03EBY/111**	**MU03ELY/111**	**MU03EAY/111**
4	355	**MU04EFY/111**	**MU04EEY/111**	**MU04ECY/111**	**MU04EBY/111**	**MU04ELY/111**	**MU04EAY/111**
5	440	**MU05EFY/111**	**MU05EEY/111**	**MU05ECY/111**	**MU05EBY/111**	**MU05ELY/111**	**MU05EAY/111**
6	525	**MU06EFY/111**	**MU06EEY/111**	**MU06ECY/111**	**MU06EBY/111**	**MU06ELY/111**	**MU06EAY/111**

NOTE: For custom requests with dimensions different from the standard, please refer to page 318.

Copyright Regina Catene Calibrate s.p.a. - 2020, All rights reserved

VERSION U 05

SUITABLE FOR CHAINS:
-793M K 83,8 (See page 249)

RADIUS mm	BASIC WIDTH mm	TRANSVERSAL PITCH mm	INFEED/ OUTFEED LENGTH mm
1000	100	85	-

Single track

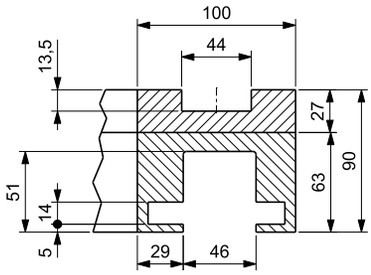

Multi track

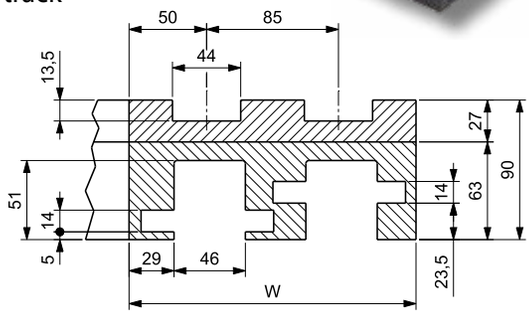

Radius

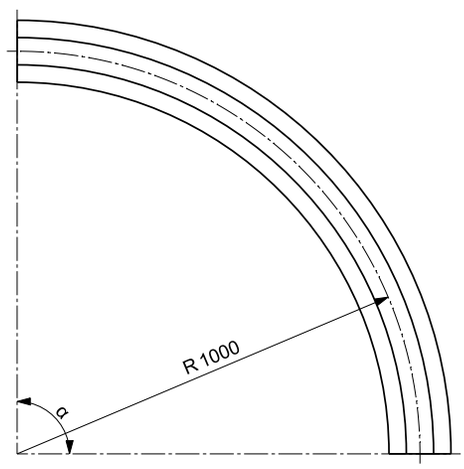

Return guide shoe

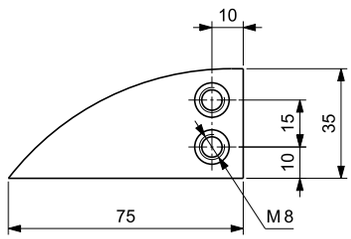

On request, Upper part is available in Self-Lubricating UHMWPE & Oil-filled PA.

PART NUMBER IDENTIFICATION

CURVES	SUPREME -A	NEW e-SLIDE	SUPREME -S
UPPER PART MATERIAL	UHMWPE	High performance Self-lubricating UHMWPE	Oil-filled PA
PART NUMBERS	See table below	Replace "MU" with "MUE" Example: 2 tracks, 90° curve angle, P/N: MUE02GAY/110	Replace "MU" with "MUD" Example: 2 tracks, 90° curve angle, P/N: MUP02GAY/110

Curve installation see page 279

Curve material see page 278

N. OF TRACKS	TOTAL WIDTH W mm	PART NUMBER Curve angle α 15°	30°	45°	60°	75°	90°
1	100	**MU01GFY/100**	**MU01GEY/100**	**MU01GCY/100**	**MU01GBY/100**	**MU01GLY/100**	**MU01GAY/100**
2	185	**MU02GFY/110**	**MU02GEY/110**	**MU02GCY/110**	**MU02GBY/110**	**MU02GLY/110**	**MU02GAY/110**
3	270	**MU03GFY/110**	**MU03GEY/110**	**MU03GCY/110**	**MU03GBY/110**	**MU03GLY/110**	**MU03GAY/110**
4	355	**MU04GFY/110**	**MU04GEY/110**	**MU04GCY/110**	**MU04GBY/110**	**MU04GLY/110**	**MU04GAY/110**

NOTE: For custom requests with dimensions different from the standard, please refer to page 318.

 Copyright Regina Catene Calibrate s.p.a. - 2020, All rights reserved

VERSION U 06

SUITABLE FOR CHAINS:
-793M K 4½ (See page 249)

RADIUS mm	BASIC WIDTH mm	TRANSVERSAL PITCH mm	INFEED/ OUTFEED LENGTH mm
500	129	120	125

Single track

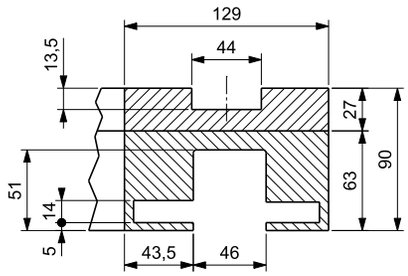

Multi track

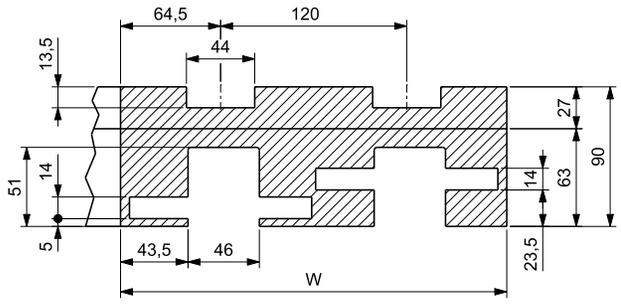

Radius

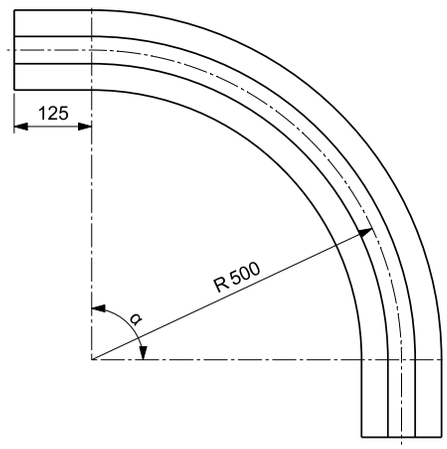

Return guide shoe

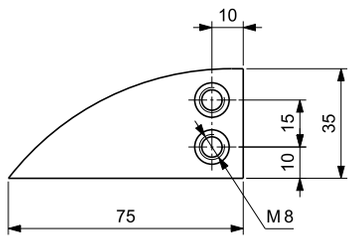

On request, Upper part is available in Self-Lubricating UHMWPE & Oil-filled PA.

PART NUMBER IDENTIFICATION

CURVES	SUPREME -A	NEW e-SLIDE	SUPREME -S
UPPER PART MATERIAL	UHMWPE	High performance Self-lubricating UHMWPE	Oil-filled PA
PART NUMBERS	See table below	Replace "MU" with "MUE" Example: 2 tracks, 90° curve angle, P/N: MUE02AAY/442	Replace "MU" with "MUP" Example: 2 tracks, 90° curve angle, P/N: MUP02AAY/442

Curve installation see page 279

Curve material see page 278

N. OF TRACKS	TOTAL WIDTH W mm	PART NUMBER Curve angle α 15°	30°	45°	60°	75°	90°
1	129	**MU01AFY/402**	**MU01AEY/402**	**MU01ACY/402**	**MU01ABY/402**	**MU01ALY/402**	**MU01AAY/402**
2	249	**MU02AFY/442**	**MU02AEY/442**	**MU02ACY/442**	**MU02ABY/442**	**MU02ALY/442**	**MU02AAY/442**
3	369	**MU03AFY/442**	**MU03AEY/442**	**MU03ACY/442**	**MU03ABY/442**	**MU03ALY/442**	**MU03AAY/442**
4	489	**MU04AFY/442**	**MU04AEY/442**	**MU04ACY/442**	**MU04ABY/442**	**MU04ALY/442**	**MU04AAY/442**

NOTE: For custom requests with dimensions different from the standard, please refer to page 318.

Copyright Regina Catene Calibrate s.p.a. - 2020, All rights reserved

MAGNETIC CURVES

On request, Magnetic curves with dimensions different from the standard can be supplied.
Please fill the form below with the requested parameters and contact REGINA customer service.

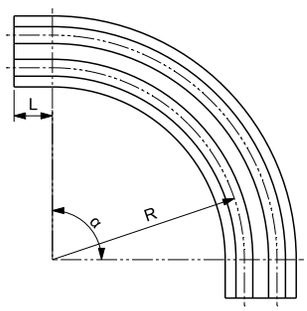

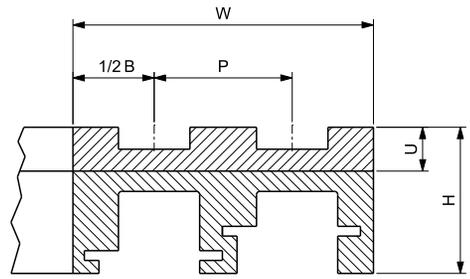

FOR CHAIN SERIES:	REQUESTED CURVE PARAMETERS		
CHAIN WIDTH:	mm	inch	°
FIRST RADIUS R:			
CURVE ANGLE α:			
N. OF TRACKS:			
TRANSVERSAL PITCH P:			
BASIC WIDTH B:			
TOTAL WIDTH W:			
INFEED LENGTH L:			

Copyright Regina Catene Calibrate s.p.a. - 2020, All rights reserved

REGINA CHAIN

PERFORMANCE IN MOTION

FliteTop® Matveyor®

TAB, Bevel and Low Pin Center Curves

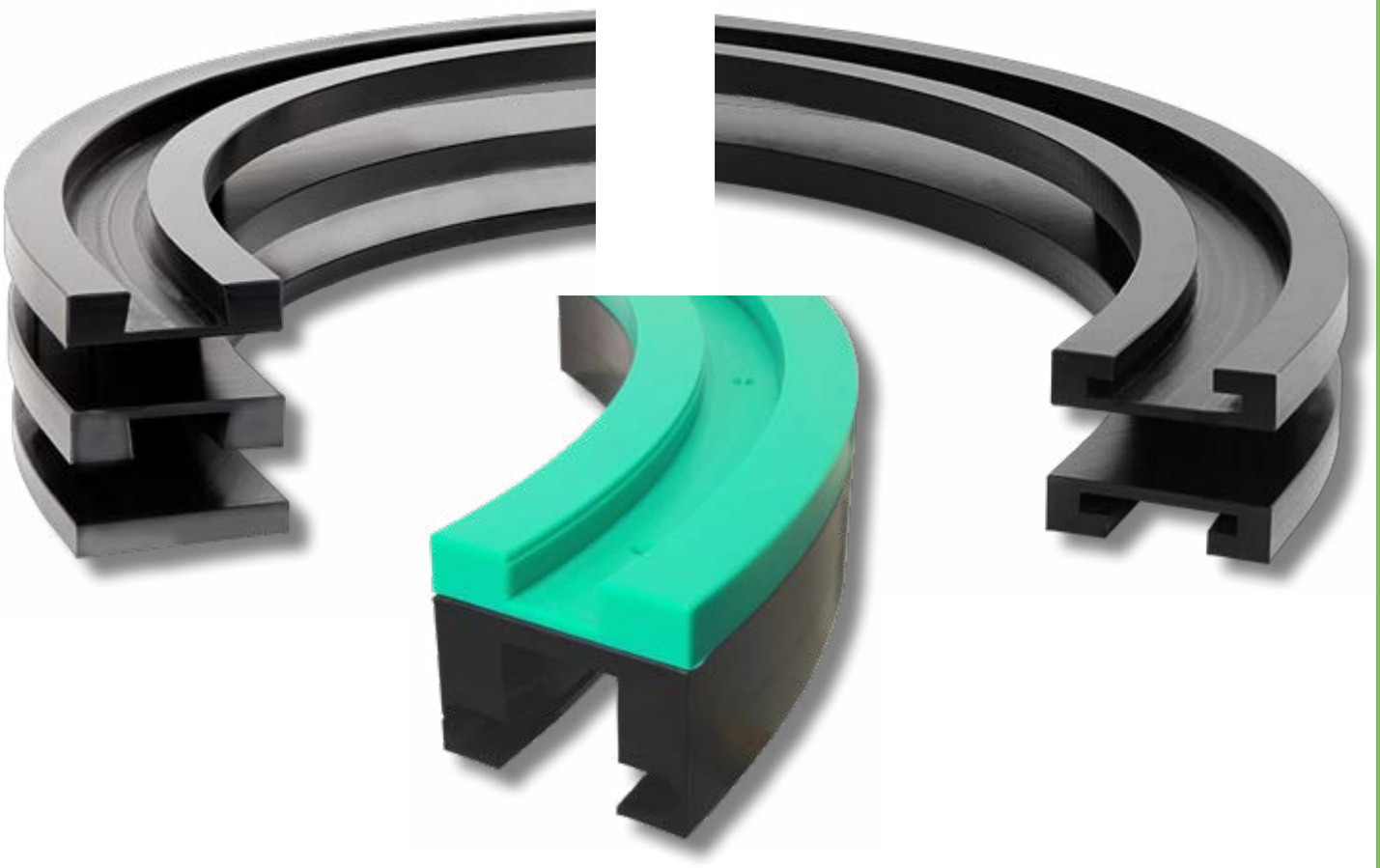

TAB CURVES

For FliteTop® & Matveyor® SIDEFLEXING CHAINS

TAB curves include both upper and return part.

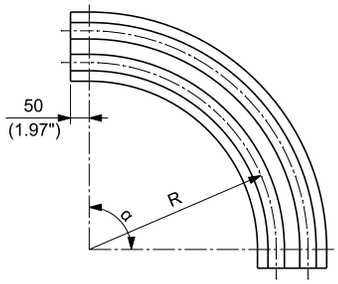

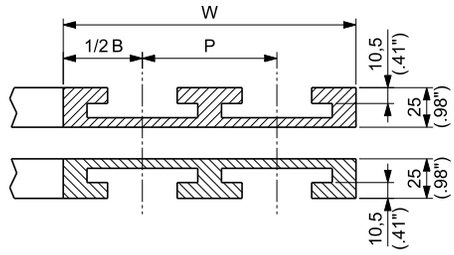

CHAIN WIDTH	TRANSVERSAL PITCH P		BASIC WIDTH B	
	mm	inch	mm	inch
3 ¼" 83,8 mm	85	3.35	100	3.94
4 ½"	120	4.72	130	5.12
7 ½"	195	7.68	200	7.87

On request, Upper part is available in Self-Lubricating UHMWPE & Oil-filled PA.

PART NUMBER IDENTIFICATION

CURVES	UHMWPE	NEW e-SLIDE	SUPREME -S
UPPER PART MATERIAL	UHMWPE	High performance Self-lubricating UHMWPE	Oil-filled PA
PART NUMBERS	See table below	Replace "T80" with "T80E" Example: Radius 500 mm, 1 track, 90° curve angle for 880T chain, P/N: T80EKD1A/1000	Replace "T80" with "T80P" Example: Radius 500 mm, 1 track, 90° curve angle for 880T chain, P/N: T80PKD1A/1000

Curve material see page 14

CHAIN TYPE Series	Width	RADIUS* R mm	R inch	N. OF TRACKS	TOTAL WIDTH W mm	W inch	PART NUMBER Curve angle α 15°	30°	45°	60°	75°	90°
878T 982T	3 ¼"	200	7.874	1	100	3.937	**T80KD1D/1F00**	**T80KD1D/1E00**	**T80KD1D/1C00**	**T80KD1D/1B00**	**T80KD1D/1L00**	**T80KD1D/1000**
PHDG 981T, HFX 880T, 880TA, 880T, 879T, 881T, 981T, 783T, 793T	3 ¼" 83.8 mm	457,2	18	1	100	3.937	**T80KD1O/1F00**	**T80KD1O/1E00**	**T80KD1O/1C00**	**T80KD1O/1B00**	**T80KD1O/1L00**	**T80KD1O/1000**
				2	185	7.283	**T80KD2O/1F00**	**T80KD2O/1E00**	**T80KD2O/1C00**	**T80KD2O/1B00**	**T80KD2O/1L00**	**T80KD2O/1000**
				3	270	10.630	**T80KD3O/1F00**	**T80KD3O/1E00**	**T80KD3O/1C00**	**T80KD3O/1B00**	**T80KD3O/1L00**	**T80KD3O/1000**
				4	355	13.189	**T80KD4O/1F00**	**T80KD4O/1E00**	**T80KD4O/1C00**	**T80KD4O/1B00**	**T80KD4O/1L00**	**T80KD4O/1000**
				5	440	15.748	**T80KD5O/1F00**	**T80KD5O/1E00**	**T80KD5O/1C00**	**T80KD5O/1B00**	**T80KD5O/1L00**	**T80KD5O/1000**
		500	19.685	1	100	3.937	**T80KD1A/1F00**	**T80KD1A/1E00**	**T80KD1A/1C00**	**T80KD1A/1B00**	**T80KD1A/1L00**	**T80KD1A/1000**
				2	185	7.283	**T80KD2A/1F00**	**T80KD2A/1E00**	**T80KD2A/1C00**	**T80KD2A/1B00**	**T80KD2A/1L00**	**T80KD2A/1000**
				3	270	10.630	**T80KD3A/1F00**	**T80KD3A/1E00**	**T80KD3A/1C00**	**T80KD3A/1B00**	**T80KD3A/1L00**	**T80KD3A/1000**
				4	355	13.189	**T80KD4A/1F00**	**T80KD4A/1E00**	**T80KD4A/1C00**	**T80KD4A/1B00**	**T80KD4A/1L00**	**T80KD4A/1000**
				5	440	15.748	**T80KD5A/1F00**	**T80KD5A/1E00**	**T80KD5A/1C00**	**T80KD5A/1B00**	**T80KD5A/1L00**	**T80KD5A/1000**
		610	24.016	1	100	3.937	**T80KD1C/1F00**	**T80KD1C/1E00**	**T80KD1C/1C00**	**T80KD1C/1B00**	**T80KD1C/1L00**	**T80KD1C/1000**
				2	185	7.283	**T80KD2C/1F00**	**T80KD2C/1E00**	**T80KD2C/1C00**	**T80KD2C/1B00**	**T80KD2C/1L00**	**T80KD2C/1000**
				3	270	10.630	**T80KD3C/1F00**	**T80KD3C/1E00**	**T80KD3C/1C00**	**T80KD3C/1B00**	**T80KD3C/1L00**	**T80KD3C/1000**
				4	355	13.189	**T80KD4C/1F00**	**T80KD4C/1E00**	**T80KD4C/1C00**	**T80KD4C/1B00**	**T80KD4C/1L00**	**T80KD4C/1000**
				5	440	15.748	**T80KD5C/1F00**	**T80KD5C/1E00**	**T80KD5C/1C00**	**T80KD5C/1B00**	**T80KD5C/1L00**	**T80KD5C/1000**
		800	31.496	1	100	3.937	**T80KD1T/1F00**	**T80KD1T/1E00**	**T80KD1T/1C00**	**T80KD1T/1B00**	**T80KD1T/1L00**	**T80KD1T/1000**
				2	185	7.283	**T80KD2T/1F00**	**T80KD2T/1E00**	**T80KD2T/1C00**	**T80KD2T/1B00**	**T80KD2T/1L00**	**T80KD2T/1000**
				3	270	10.630	**T80KD3T/1F00**	**T80KD3T/1E00**	**T80KD3T/1C00**	**T80KD3T/1B00**	**T80KD3T/1L00**	**T80KD3T/1000**
				4	355	13.189	**T80KD4T/1F00**	**T80KD4T/1E00**	**T80KD4T/1C00**	**T80KD4T/1B00**	**T80KD4T/1L00**	**T80KD4T/1000**
				5	440	15.748	**T80KD5T/1F00**	**T80KD5T/1E00**	**T80KD5T/1C00**	**T80KD5T/1B00**	**T80KD5T/1L00**	**T80KD5T/1000**
		1000	39.370	1	100	3.937	**T80KD1G/1F00**	**T80KD1G/1E00**	**T80KD1G/1C00**	**T80KD1G/1B00**	**T80KD1G/1L00**	**T80KD1G/1000**
				2	185	7.283	**T80KD2G/1F00**	**T80KD2G/1E00**	**T80KD2G/1C00**	**T80KD2G/1B00**	**T80KD2G/1L00**	**T80KD2G/1000**
				3	270	10.630	**T80KD3G/1F00**	**T80KD3G/1E00**	**T80KD3G/1C00**	**T80KD3G/1B00**	**T80KD3G/1L00**	**T80KD3G/1000**
				4	355	13.189	**T80KD4G/1F00**	**T80KD4G/1E00**	**T80KD4G/1C00**	**T80KD4G/1B00**	**T80KD4G/1L00**	**T80KD4G/1000**
				5	440	15.748	**T80KD5G/1F00**	**T80KD5G/1E00**	**T80KD5G/1C00**	**T80KD5G/1B00**	**T80KD5G/1L00**	**T80KD5G/1000**
981T, 880T, HFX 880T, 879T, 881T, 783T, 793T	4 ½"	610	24.016	1	130	5.118	**T80KG1C/1F00**	**T80KG1C/1E00**	**T80KG1C/1C00**	**T80KG1C/1B00**	**T80KG1C/1L00**	**T80KG1C/1000**
				2	250	9.843	**T80KG2C/1F00**	**T80KG2C/1E00**	**T80KG2C/1C00**	**T80KG2C/1B00**	**T80KG2C/1L00**	**T80KG2C/1000**
		800	31.496	1	130	5.118	**T80KG1T/1F00**	**T80KG1T/1E00**	**T80KG1T/1C00**	**T80KG1T/1B00**	**T80KG1T/1L00**	**T80KG1T/1000**
				2	250	9.843	**T80KG2T/1F00**	**T80KG2T/1E00**	**T80KG2T/1C00**	**T80KG2T/1B00**	**T80KG2T/1L00**	**T80KG2T/1000**
		1000	39.370	1	130	5.118	**T80KG1G/1F00**	**T80KG1G/1E00**	**T80KG1G/1C00**	**T80KG1G/1B00**	**T80KG1G/1L00**	**T80KG1G/1000**
				2	250	9.843	**T80KG2G/1F00**	**T80KG2G/1E00**	**T80KG2G/1C00**	**T80KG2G/1B00**	**T80KG2G/1L00**	**T80KG2G/1000**
881T, 981T, PHDG 981T	7 ½"	610	24.016	1	200	7.874	**T80KL1C/1F00**	**T80KL1C/1E00**	**T80KL1C/1C00**	**T80KL1C/1B00**	**T80KL1C/1L00**	**T80KL1C/1000**
				2	395	15.551	**T80KL2C/1F00**	**T80KL2C/1E00**	**T80KL2C/1C00**	**T80KL2C/1B00**	**T80KL2C/1L00**	**T80KL2C/1000**
		800	31.496	1	200	7.874	**T80KL1T/1F00**	**T80KL1T/1E00**	**T80KL1T/1C00**	**T80KL1T/1B00**	**T80KL1T/1L00**	**T80KL1T/1000**
				2	395	15.551	**T80KL2T/1F00**	**T80KL2T/1E00**	**T80KL2T/1C00**	**T80KL2T/1B00**	**T80KL2T/1L00**	**T80KL2T/1000**
		1000	39.370	1	200	7.874	**T80KL1G/1F00**	**T80KL1G/1E00**	**T80KL1G/1C00**	**T80KL1G/1B00**	**T80KL1G/1L00**	**T80KL1G/1000**
				2	395	15.551	**T80KL2G/1F00**	**T80KL2G/1E00**	**T80KL2G/1C00**	**T80KL2G/1B00**	**T80KL2G/1L00**	**T80KL2G/1000**

* First track is intended.

NOTE: for custom requests with dimensions different from the standard, please refer to page 323.

Copyright Regina Catene Calibrate s.p.a. - 2020, All rights reserved

For FliteTop® SIDEFLEXING CHAINS

TAB curves include both upper and return part.

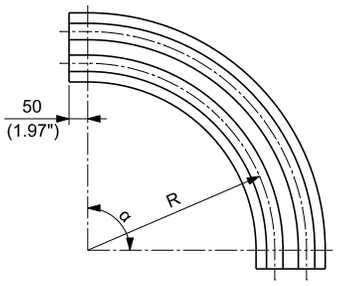

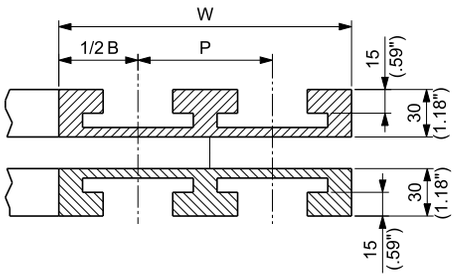

CHAIN WIDTH	TRANSVERSAL PITCH P		BASIC WIDTH B	
	mm	inch	mm	inch
3 ¾"	Single track		110	4.33
4 ½"			130	5.12
6"			170	6.69
7 ½"			200	7.87
10"			270	10.63
12"			320	12.60

On request, Upper part is available in Self-Lubricating UHMWPE & Oil-filled PA.

PART NUMBER IDENTIFICATION

CURVES	UHMWPE	NEW e-SLIDE	SUPREME -S
UPPER PART MATERIAL	UHMWPE	High performance Self-lubricating UHMWPE	Oil-filled PA
PART NUMBERS	See table below	Replace "T82" with "T82E" Example: Radius 700 mm, 1 track, 90° curve angle for LBP 882T K 3¾ chain, P/N: T82EKEA1Z/1000	Replace "T82" with "T82P" Example: Radius 700 mm, 1 track, 90° curve angle for LBP 882T K 3¾ chain, P/N: T82PKEA1Z/1000

Curve material see page 14

CHAIN TYPE		RADIUS R		N. OF TRACKS	TOTAL WIDTH W		PART NUMBER Curve angle α					
Series	Width	mm	inch		mm	inch	15°	30°	45°	60°	75°	90°
LBP 882T	3 ¾"	700	27.559	1	110	4.331	**T82KEA1Z/1F00**	**T82KEA1Z/1E00**	**T82KEA1Z/1C00**	**T82KEA1Z/1B00**	**T82KEA1Z/1L00**	**T82KEA1Z/1000**
882T		610	24.016	1	130	5.118	**T82KG1C/1F00**	**T82KG1C/1E00**	**T82KG1C/1C00**	**T82KG1C/1B00**	**T82KG1C/1L00**	**T82KG1C/1000**
HFX 882T	4 ½"	800	31.496	1	130	5.118	**T82KG1T/1F00**	**T82KG1T/1E00**	**T82KG1T/1C00**	**T82KG1T/1B00**	**T82KG1T/1L00**	**T82KG1T/1000**
LBP 882T		1000	39.370	1	130	5.118	**T82KG1G/1F00**	**T82KG1G/1E00**	**T82KG1G/1C00**	**T82KG1G/1B00**	**T82KG1G/1L00**	**T82KG1G/1000**
		610	24.016	1	170	6.69	**T82KH1C/1F00**	**T82KH1C/1E00**	**T82KH1C/1C00**	**T82KH1C/1B00**	**T82KH1C/1L00**	**T82KH1C/1000**
882T	6"	800	31.496	1	170	6.69	**T82KH1T/1F00**	**T82KH1T/1E00**	**T82KH1T/1C00**	**T82KH1T/1B00**	**T82KH1T/1L00**	**T82KH1T/1000**
		1000	39.370	1	170	6.69	**T82KH1G/1F00**	**T82KH1G/1E00**	**T82KH1G/1C00**	**T82KH1G/1B00**	**T82KH1G/1L00**	**T82KH1G/1000**
882T		610	24.016	1	200	7.874	**T82KL1C/1F00**	**T82KL1C/1E00**	**T82KL1C/1C00**	**T82KL1C/1B00**	**T82KL1C/1L00**	**T82KL1C/1000**
HFX 882T	7 ½"	800	31.496	1	200	7.874	**T82KL1T/1F00**	**T82KL1T/1E00**	**T82KL1T/1C00**	**T82KL1T/1B00**	**T82KL1T/1L00**	**T82KL1T/1000**
LBP 882T		1000	39.370	1	200	7.874	**T82KL1G/1F00**	**T82KL1G/1E00**	**T82KL1G/1C00**	**T82KL1G/1B00**	**T82KL1G/1L00**	**T82KL1G/1000**
882T		610	24.016	1	270	10.630	**T82KM1C/1F00**	**T82KM1C/1E00**	**T82KM1C/1C00**	**T82KM1C/1B00**	**T82KM1C/1L00**	**T82KM1C/1000**
HFX 882T	10"	800	31.496	1	270	10.630	**T82KM1T/1F00**	**T82KM1T/1E00**	**T82KM1T/1C00**	**T82KM1T/1B00**	**T82KM1T/1L00**	**T82KM1T/1000**
LBP 882T		1000	39.370	1	270	10.630	**T82KM1G/1F00**	**T82KM1G/1E00**	**T82KM1G/1C00**	**T82KM1G/1B00**	**T82KM1G/1L00**	**T82KM1G/1000**
882T		610	24.016	1	320	12.598	**T82KN1C/1F00**	**T82KN1C/1E00**	**T82KN1C/1C00**	**T82KN1C/1B00**	**T82KN1C/1L00**	**T82KN1C/1000**
HFX 882T	12"	800	31.496	1	320	12.598	**T82KN1T/1F00**	**T82KN1T/1E00**	**T82KN1T/1C00**	**T82KN1T/1B00**	**T82KN1T/1L00**	**T82KN1T/1000**
LBP 882T		1000	39.370	1	320	12.598	**T82KN1G/1F00**	**T82KN1G/1E00**	**T82KN1G/1C00**	**T82KN1G/1B00**	**T82KN1G/1L00**	**T82KN1G/1000**

NOTE: for custom requests with dimensions different from the standard, please refer to page 323.

Copyright Regina Catene Calibrate s.p.a. - 2020, All rights reserved

For FliteTop® SIDEFLEXING CHAINS

TAB curves include both upper and return part.

FOR 1843T CHAIN

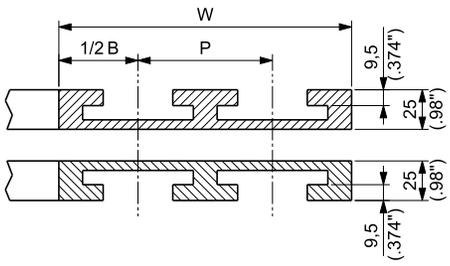

FOR 1701T CHAIN

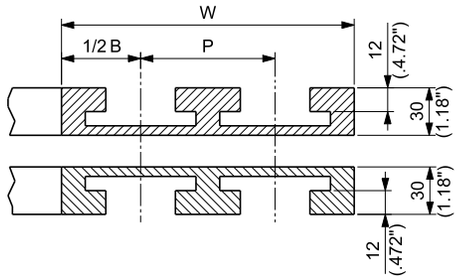

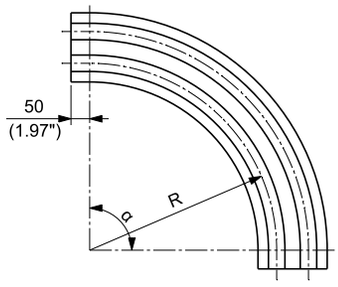

FOR ALL OTHER CHAINS

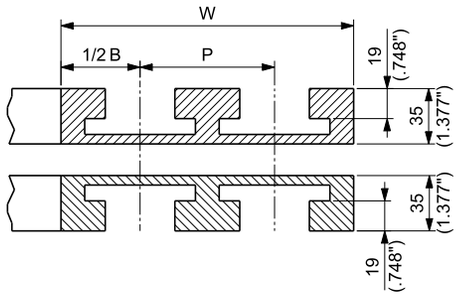

CHAIN WIDTH	TRANSVERSAL PITCH P		BASIC WIDTH B	
	mm	inch	mm	inch
1 ¼"	Single track		50	1.97
53mm			100	3.94
2 ¼"			75	2.95
3 ¼"			100	3.94
4 ½"			130	5.12
6'			170	6.69
7 ½"			200	7.87
10"			270	10.63
12"			320	12.60
16"			420	16.54

On request, Upper part is available in Self-Lubricating UHMWPE & Oil-filled PA.

PART NUMBER IDENTIFICATION

CURVES	UHMWPE	NEW e-SLIDE	SUPREME -S
UPPER PART MATERIAL	UHMWPE	High performance Self-lubricating UHMWPE	Oil-filled PA
PART NUMBERS	See table below	Replace "T73" with "T73E" Replace "T43" with "T43E" Replace "T17" with "T17E" Example: Radius 500 mm, 1 track, 90° curve angle for 1863T K 2 ¼" chain, P/N: T73EKS1A/1000	Replace "T73" with "T73P" Replace "T43" with "T43P" Replace "T17" with "T17P" Example: Radius 500 mm, 1 track, 90° curve angle for 1863T K 2 ¼" chain, P/N: T73PKS1A/1000

Curve material see page 14

CHAIN TYPE		RADIUS R		N. OF TRACKS	TOTAL WIDTH W		PART NUMBER Curve angle α					
Series	Width	mm	inch		mm	inch	15°	30°	45°	60°	75°	90°
1863T	2 ¼"	500	19.685	1	75	2.95	**T73KS1A/1F00**	**T73KS1A/1E00**	**T73KS1A/1C00**	**T73KS1A/1B00**	**T73KS1A/1L00**	**T73KS1A/1000**
1874T 1863T 1873T HFX 1873T	3 ¼"	500	19.685	1	100	3.94	**T73KD1A/1F00**	**T73KD1A/1E00**	**T73KD1A/1C00**	**T73KD1A/1B00**	**T73KD1A/1L00**	**T73KD1A/1000**
		610	24.016	1	100	3.94	**T73KD1C/1F00**	**T73KD1C/1E00**	**T73KD1C/1C00**	**T73KD1C/1B00**	**T73KD1C/1L00**	**T73KD1C/1000**
		800	31.496	1	100	3.94	**T73KD1T/1F00**	**T73KD1T/1E00**	**T73KD1T/1C00**	**T73KD1T/1B00**	**T73KD1T/1L00**	**T73KD1T/1000**
		1000	39.370	1	100	3.94	**T73KD1G/1F00**	**T73KD1G/1E00**	**T73KD1G/1C00**	**T73KD1G/1B00**	**T73KD1G/1L00**	**T73KD1G/1000**
1874T 1863T 1873T HFX 1873T	4 ½"	610	24.016	1	130	5.12	**T73KG1C/1F00**	**T73KG1C/1E00**	**T73KG1C/1C00**	**T73KG1C/1B00**	**T73KG1C/1L00**	**T73KG1C/1000**
		800	31.496	1	130	5.12	**T73KG1T/1F00**	**T73KG1T/1E00**	**T73KG1T/1C00**	**T73KG1T/1B00**	**T73KG1T/1L00**	**T73KG1T/1000**
		1000	39.370	1	130	5.12	**T73KG1G/1F00**	**T73KG1G/1E00**	**T73KG1G/1C00**	**T73KG1G/1B00**	**T73KG1G/1L00**	**T73KG1G/1000**
1874T 1873T HFX 1873T	6"	500	19.685	1	170	6.69	**T73KH1A/1F00**	**T73KH1A/1E00**	**T73KH1A/1C00**	**T73KH1A/1B00**	**T73KH1A/1L00**	**T73KH1A/1000**
1874T 1863T 1873T HFX 1873T	7 ½"	610	24.016	1	200	7.87	**T73KL1C/1F00**	**T73KL1C/1E00**	**T73KL1C/1C00**	**T73KL1C/1B00**	**T73KL1C/1L00**	**T73KL1C/1000**
		800	31.496	1	200	7.87	**T73KL1T/1F00**	**T73KL1T/1E00**	**T73KL1T/1C00**	**T73KL1T/1B00**	**T73KL1T/1L00**	**T73KL1T/1000**
		1000	39.370	1	200	7.87	**T73KL1G/1F00**	**T73KL1G/1E00**	**T73KL1G/1C00**	**T73KL1G/1B00**	**T73KL1G/1L00**	**T73KL1G/1000**
1873T HFX 1873T	10"	610	24.016	1	270	10.63	**T73KM1C/1F00**	**T73KM1C/1E00**	**T73KM1C/1C00**	**T73KM1C/1B00**	**T73KM1C/1L00**	**T73KM1C/1000**
		800	31.496	1	270	10.63	**T73KM1T/1F00**	**T73KM1T/1E00**	**T73KM1T/1C00**	**T73KM1T/1B00**	**T73KM1T/1L00**	**T73KM1T/1000**
		1000	39.370	1	270	10.63	**T73KM1G/1F00**	**T73KM1G/1E00**	**T73KM1G/1C00**	**T73KM1G/1B00**	**T73KM1G/1L00**	**T73KM1G/1000**
1863T 1873T HFX 1873T	12"	610	24.016	1	320	12.60	**T73KN1C/1F00**	**T73KN1C/1E00**	**T73KN1C/1C00**	**T73KN1C/1B00**	**T73KN1C/1L00**	**T73KN1C/1000**
		800	31.496	1	320	12.60	**T73KN1T/1F00**	**T73KN1T/1E00**	**T73KN1T/1C00**	**T73KN1T/1B00**	**T73KN1T/1L00**	**T73KN1T/1000**
		1000	39.370	1	320	12.60	**T73KN1G/1F00**	**T73KN1G/1E00**	**T73KN1G/1C00**	**T73KN1G/1B00**	**T73KN1G/1L00**	**T73KN1G/1000**
1863T	16"	800	31.496	1	420	16.54	**T73KJ1T/1F00**	**T73KJ1T/1E00**	**T73KJ1T/1C00**	**T73KJ1T/1B00**	**T73KJ1T/1L00**	**T73KJ1T/1000**
		1000	39.370	1	420	16.54	**T73KJ1G/1F00**	**T73KJ1G/1E00**	**T73KJ1G/1C00**	**T73KJ1G/1B00**	**T73KJ1G/1L00**	**T73KJ1G/1000**
1843T	1 ¼"	300	11.811	1	50	1.97	**T43KPA1Y/1F00**	**T43KPA1Y/1E00**	**T43KPA1Y/1C00**	**T43KPA1Y/1B00**	**T43KPA1Y/1L00**	**T43KPA1Y/1000**
		500	19.685	1	50	1.97	**T43KPA1A/1F00**	**T43KPA1A/1E00**	**T43KPA1A/1C00**	**T43KPA1A/1B00**	**T43KPA1A/1L00**	**T43KPA1A/1000**
1701T	53mm	250	9.843	1	100	3.94	**T17KD1V/1F00**	**T17KD1V/1E00**	**T17KD1V/1C00**	**T17KD1V/1B00**	**T17KD1V/1L00**	**T17KD1V/1000**
		500	19.685	1	100	3.94	**T17KD1A/1F00**	**T17KD1A/1E00**	**T17KD1A/1C00**	**T17KD1A/1B00**	**T17KD1A/1L00**	**T17KD1A/1000**

NOTE: for custom requests with dimensions different from the standard, please refer to page 323.

Copyright Regina Catene Calibrate s.p.a. - 2020, All rights reserved

TAB CURVES

On request, TAB curves with dimensions different from the standard can be supplied.
Please fill the form below with the requested parameters and contact REGINA customer service.

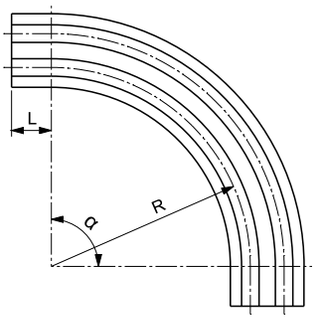

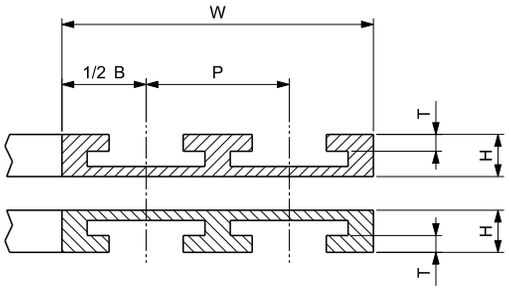

FOR CHAIN SERIES:	REQUESTED CURVE PARAMETERS		
CHAIN WIDTH:	mm	inch	°
FIRST RADIUS R:			
CURVE ANGLE α:			
N. OF TRACKS:			
TRANSVERSAL PITCH P:			
BASIC WIDTH B:			
TOTAL WIDTH W:			
INFEED LENGTH L:			

Copyright Regina Catene Calibrate s.p.a. - 2020, All rights reserved

For Matveyor® SIDEFLEXING BELTS

TAB curves for sideflexing belts include upper part only.
For more information on how to support the sideflexing belts in the return part, please contact REGINA application engineers.

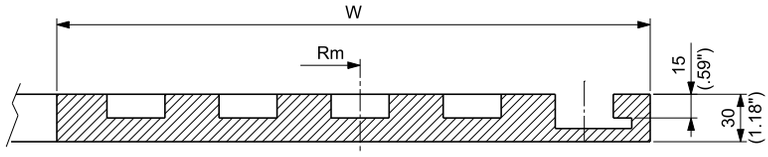

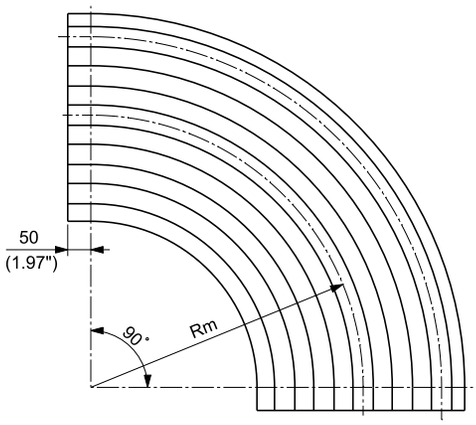

The curves are manufactured in UHMWPE material

Curve material
see page 14

BELT TYPE	BELT WIDTH		MEDIUM RADIUS Rm		CURVE WIDTH W		PART NUMBER
Series	mm	inch	mm	inch	mm	inch	
2556HTB	255	10.039	600	23.622	281	11.063	**T55HK0281/B10**
	340	13.386	800	31.496	366	14.409	**T55HK0366/C10**
	425	16.732	1000	39.370	451	17.756	**T55HK0451/D10**
	510	20.079	1200	47.224	536	21.102	**T55HK0536/E10**
	595	23.425	1400	55.118	621	24.449	**T55HK0621/F10**
	680	26.772	1600	62.992	706	27.795	**T55HK0706/G10**
	765	30.118	1800	70.866	791	31.142	**T55HK0791/H10**
	850	33.465	2000	78.740	876	34.488	**T55HK0876/J10**
2556HTB-SR	340	13.386	500	19.685	366	14.409	**T55HK0366/A10**
	425	16.732	600	23.622	451	17.756	**T55HK0451/B10**
	510	20.079	800	31.496	536	21.102	**T55HK0536/C10**
	595	23.425	1000	39.370	621	24.449	**T55HK0621/D10**
	680	26.772	1200	47.224	706	27.795	**T55HK0706/E10**
	765	30.118	1400	55.118	791	31.142	**T55HK0791/F10**
	850	33.465	1600	62.992	876	34.488	**T55HK0876/G10**

Copyright Regina Catene Calibrate s.p.a. - 2020, All rights reserved

For FliteTop® SIDEFLEXING CHAINS

Bevel curves include 3 parts: upper, return and support plate.

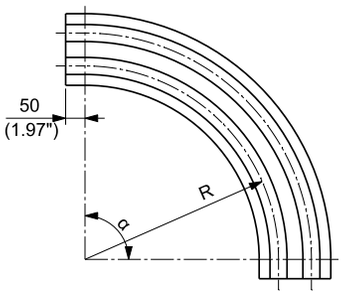

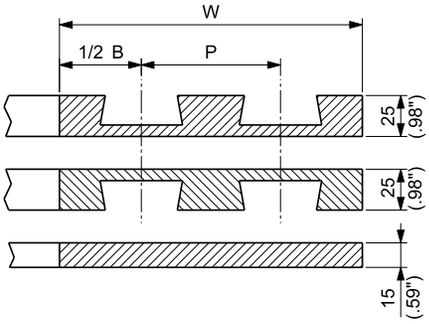

CHAIN WIDTH	TRANSVERSAL PITCH P		BASIC WIDTH B	
	mm	inch	mm	inch
3 ¼" 83,8 mm	85	3.35	100	3.94
4 ½"	120	4.72	130	5.12
7 ½"	195	7.68	200	7.87

On request, Upper part is available in Self-Lubricating UHMWPE & Oil-filled PA.

PART NUMBER IDENTIFICATION

CURVES	UHMWPE	NEW e-SLIDE	SUPREME -S
UPPER PART MATERIAL	UHMWPE	High performance Self-lubricating UHMWPE	Oil-filled PA
PART NUMBERS	See table below	Replace "B80" with "B80E" Example: Radius 500 mm, 1 track, 90° curve angle for 880 K 3¼ chain, P/N: B80EKD1A/1000	Replace "B80" with "B80P" Example: Radius 500 mm, 1 track, 90° curve angle for 880 K 3¼ chain, P/N: B80PKD1A/1000

Curve material see page 14

CHAIN TYPE Series	CHAIN TYPE Width	RADIUS* R mm	RADIUS* R inch	N. OF TRACKS	TOTAL WIDTH W mm	TOTAL WIDTH W inch	PART NUMBER Curve angle α 15°	30°	45°	60°	75°	90°
880 879 881 981	3 ¼" 83.8 mm	457,2	18	1	100	3.937	B80KD1O/1F00	B80KD1O/1E00	B80KD1O/1C00	B80KD1O/1B00	B80KD1O/1L00	B80KD1O/1000
				2	185	7.283	B80KD2O/1F00	B80KD2O/1E00	B80KD2O/1C00	B80KD2O/1B00	B80KD2O/1L00	B80KD2O/1000
				3	270	10.630	B80KD3O/1F00	B80KD3O/1E00	B80KD3O/1C00	B80KD3O/1B00	B80KD3O/1L00	B80KD3O/1000
				4	355	13.189	B80KD4O/1F00	B80KD4O/1E00	B80KD4O/1C00	B80KD4O/1B00	B80KD4O/1L00	B80KD4O/1000
				5	440	15.748	B80KD5O/1F00	B80KD5O/1E00	B80KD5O/1C00	B80KD5O/1B00	B80KD5O/1L00	B80KD5O/1000
		500	19.685	1	100	3.937	B80KD1A/1F00	B80KD1A/1E00	B80KD1A/1C00	B80KD1A/1B00	B80KD1A/1L00	B80KD1A/1000
				2	185	7.283	B80KD2A/1F00	B80KD2A/1E00	B80KD2A/1C00	B80KD2A/1B00	B80KD2A/1L00	B80KD2A/1000
				3	270	10.630	B80KD3A/1F00	B80KD3A/1E00	B80KD3A/1C00	B80KD3A/1B00	B80KD3A/1L00	B80KD3A/1000
				4	355	13.189	B80KD4A/1F00	B80KD4A/1E00	B80KD4A/1C00	B80KD4A/1B00	B80KD4A/1L00	B80KD4A/1000
				5	440	15.748	B80KD5A/1F00	B80KD5A/1E00	B80KD5A/1C00	B80KD5A/1B00	B80KD5A/1L00	B80KD5A/1000
		610	24.016	1	100	3.937	B80KD1C/1F00	B80KD1C/1E00	B80KD1C/1C00	B80KD1C/1B00	B80KD1C/1L00	B80KD1C/1000
				2	185	7.283	B80KD2C/1F00	B80KD2C/1E00	B80KD2C/1C00	B80KD2C/1B00	B80KD2C/1L00	B80KD2C/1000
				3	270	10.630	B80KD3C/1F00	B80KD3C/1E00	B80KD3C/1C00	B80KD3C/1B00	B80KD3C/1L00	B80KD3C/1000
				4	355	13.189	B80KD4C/1F00	B80KD4C/1E00	B80KD4C/1C00	B80KD4C/1B00	B80KD4C/1L00	B80KD4C/1000
				5	440	15.748	B80KD5C/1F00	B80KD5C/1E00	B80KD5C/1C00	B80KD5C/1B00	B80KD5C/1L00	B80KD5C/1000
		800	31.496	1	100	3.937	B80KD1T/1F00	B80KD1T/1E00	B80KD1T/1C00	B80KD1T/1B00	B80KD1T/1L00	B80KD1T/1000
				2	185	7.283	B80KD2T/1F00	B80KD2T/1E00	B80KD2T/1C00	B80KD2T/1B00	B80KD2T/1L00	B80KD2T/1000
				3	270	10.630	B80KD3T/1F00	B80KD3T/1E00	B80KD3T/1C00	B80KD3T/1B00	B80KD3T/1L00	B80KD3T/1000
				4	355	13.189	B80KD4T/1F00	B80KD4T/1E00	B80KD4T/1C00	B80KD4T/1B00	B80KD4T/1L00	B80KD4T/1000
				5	440	15.748	B80KD5T/1F00	B80KD5T/1E00	B80KD5T/1C00	B80KD5T/1B00	B80KD5T/1L00	B80KD5T/1000
				6	525	20.669	B80KD6T/1F00	B80KD6T/1E00	B80KD6T/1C00	B80KD6T/1B00	B80KD6T/1L00	B80KD6T/1000
		1000	39.370	1	100	3.937	B80KD1G/1F00	B80KD1G/1E00	B80KD1G/1C00	B80KD1G/1B00	B80KD1G/1L00	B80KD1G/1000
				2	185	7.283	B80KD2G/1F00	B80KD2G/1E00	B80KD2G/1C00	B80KD2G/1B00	B80KD2G/1L00	B80KD2G/1000
				3	270	10.630	B80KD3G/1F00	B80KD3G/1E00	B80KD3G/1C00	B80KD3G/1B00	B80KD3G/1L00	B80KD3G/1000
				4	355	13.189	B80KD4G/1F00	B80KD4G/1E00	B80KD4G/1C00	B80KD4G/1B00	B80KD4G/1L00	B80KD4G/1000
				5	440	15.748	B80KD5G/1F00	B80KD5G/1E00	B80KD5G/1C00	B80KD5G/1B00	B80KD5G/1L00	B80KD5G/1000
880 879 881 981	4 ½"	610	24.016	1	130	5.118	B80KG1C/1F00	B80KG1C/1E00	B80KG1C/1C00	B80KG1C/1B00	B80KG1C/1L00	B80KG1C/1000
				2	250	9.843	B80KG2C/1F00	B80KG2C/1E00	B80KG2C/1C00	B80KG2C/1B00	B80KG2C/1L00	B80KG2C/1000
		800	31.496	1	130	5.118	B80KG1T/1F00	B80KG1T/1E00	B80KG1T/1C00	B80KG1T/1B00	B80KG1T/1L00	B80KG1T/1000
				2	250	9.843	B80KG2T/1F00	B80KG2T/1E00	B80KG2T/1C00	B80KG2T/1B00	B80KG2T/1L00	B80KG2T/1000
		1000	39.370	1	130	5.118	B80KG1G/1F00	B80KG1G/1E00	B80KG1G/1C00	B80KG1G/1B00	B80KG1G/1L00	B80KG1G/1000
				2	250	9.843	B80KG2G/1F00	B80KG2G/1E00	B80KG2G/1C00	B80KG2G/1B00	B80KG2G/1L00	B80KG2G/1000
881 981	7 ½"	610	24.016	1	200	7.874	B80KL1C/1F00	B80KL1C/1E00	B80KL1C/1C00	B80KL1C/1B00	B80KL1C/1L00	B80KL1C/1000
				2	395	15.551	B80KL2C/1F00	B80KL2C/1E00	B80KL2C/1C00	B80KL2C/1B00	B80KL2C/1L00	B80KL2C/1000
		800	31.496	1	200	7.874	B80KL1T/1F00	B80KL1T/1E00	B80KL1T/1C00	B80KL1T/1B00	B80KL1T/1L00	B80KL1T/1000
				2	395	15.551	B80KL2T/1F00	B80KL2T/1E00	B80KL2T/1C00	B80KL2T/1B00	B80KL2T/1L00	B80KL2T/1000
		1000	39.370	1	200	7.874	B80KL1G/1F00	B80KL1G/1E00	B80KL1G/1C00	B80KL1G/1B00	B80KL1G/1L00	B80KL1G/1000
				2	395	15.551	B80KL2G/1F00	B80KL2G/1E00	B80KL2G/1C00	B80KL2G/1B00	B80KL2G/1L00	B80KL2G/1000

* First track is intended.
NOTE: for custom requests with dimensions different from the standard, please refer to page 327.

Copyright Regina Catene Calibrate s.p.a. - 2020, All rights reserved

For FliteTop® SIDEFLEXING CHAINS

Bevel curves include 3 parts: upper, return and support plate.

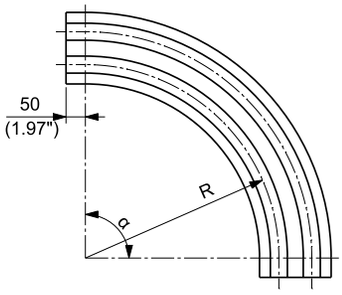

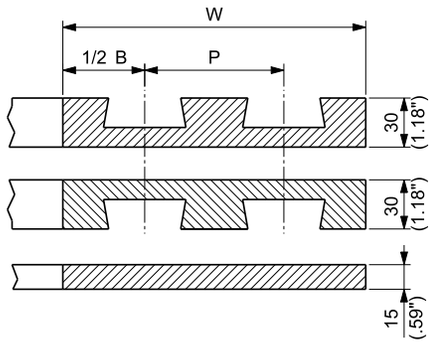

CHAIN WIDTH	TRANSVERSAL PITCH P		BASIC WIDTH B	
	mm	inch	mm	inch
4 ½"	Single track		130	5.12
7 ½"			200	7.87
10"			270	10.63
12"			320	12.60

On request, Upper part is available in Self-Lubricating UHMWPE & Oil-filled PA.

PART NUMBER IDENTIFICATION

CURVES	UHMWPE	NEW e-SLIDE	SUPREME -S
UPPER PART MATERIAL	UHMWPE	High performance Self-lubricating UHMWPE	Oil-filled PA
PART NUMBERS	See table below	Replace "B82" with "B82E" Example: Radius 610 mm, 1 tracks, 90° curve angle for 882 K 4½ chain, P/N: B82EKG1C/1000	Replace "B82" with "B82P" Example: Radius 610 mm, 1 tracks, 90° curve angle for 882 K 4½ chain, P/N: B82PKG1C/1000

Curve material see page 14

CHAIN TYPE		RADIUS R		N. OF TRACKS	TOTAL WIDTH W		PART NUMBER Curve angle α					
Series	Width	mm	inch		mm	inch	15°	30°	45°	60°	75°	90°
882	4 ½"	610	24.016	1	130	5.118	**B82KG1C/1F00**	**B82KG1C/1E00**	**B82KG1C/1C00**	**B82KG1C/1B00**	**B82KG1C/1L00**	**B82KG1C/1000**
		800	31.496	1	130	5.118	**B82KG1T/1F00**	**B82KG1T/1E00**	**B82KG1T/1C00**	**B82KG1T/1B00**	**B82KG1T/1L00**	**B82KG1T/1000**
		1000	39.370	1	130	5.118	**B82KG1G/1F00**	**B82KG1G/1E00**	**B82KG1G/1C00**	**B82KG1G/1B00**	**B82KG1G/1L00**	**B82KG1G/1000**
	7 ½"	610	24.016	1	200	7.874	**B82KL1C/1F00**	**B82KL1C/1E00**	**B82KL1C/1C00**	**B82KL1C/1B00**	**B82KL1C/1L00**	**B82KL1C/1000**
		800	31.496	1	200	7.874	**B82KL1T/1F00**	**B82KL1T/1E00**	**B82KL1T/1C00**	**B82KL1T/1B00**	**B82KL1T/1L00**	**B82KL1T/1000**
		1000	39.370	1	200	7.874	**B82KL1G/1F00**	**B82KL1G/1E00**	**B82KL1G/1C00**	**B82KL1G/1B00**	**B82KL1G/1L00**	**B82KL1G/1000**
	10"	610	24.016	1	270	10.630	**B82KM1C/1F00**	**B82KM1C/1E00**	**B82KM1C/1C00**	**B82KM1C/1B00**	**B82KM1C/1L00**	**B82KM1C/1000**
		800	31.496	1	270	10.630	**B82KM1T/1F00**	**B82KM1T/1E00**	**B82KM1T/1C00**	**B82KM1T/1B00**	**B82KM1T/1L00**	**B82KM1T/1000**
		1000	39.370	1	270	10.630	**B82KM1G/1F00**	**B82KM1G/1E00**	**B82KM1G/1C00**	**B82KM1G/1B00**	**B82KM1G/1L00**	**B82KM1G/1000**
	12"	610	24.016	1	320	12.598	**B82KN1C/1F00**	**B82KN1C/1E00**	**B82KN1C/1C00**	**B82KN1C/1B00**	**B82KN1C/1L00**	**B82KN1C/1000**
		800	31.496	1	320	12.598	**B82KN1T/1F00**	**B82KN1T/1E00**	**B82KN1T/1C00**	**B82KN1T/1B00**	**B82KN1T/1L00**	**B82KN1T/1000**
		1000	39.370	1	320	12.598	**B82KN1G/1F00**	**B82KN1G/1E00**	**B82KN1G/1C00**	**B82KN1G/1B00**	**B82KN1G/1L00**	**B82KN1G/1000**

NOTE: for custom requests with dimensions different from the standard, please refer to page 327.

 Copyright Regina Catene Calibrate s.p.a. - 2020, All rights reserved

BEVEL CURVES

On request, BEVEL curves with dimensions different from the standard can be supplied.
Please fill the form below with the requested parameters and contact REGINA customer service.

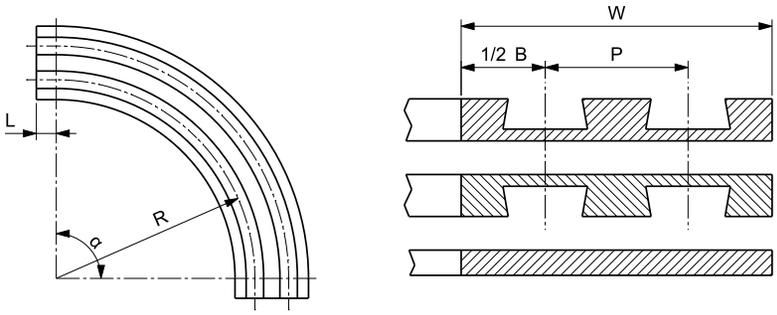

FOR CHAIN SERIES:	REQUESTED CURVE PARAMETERS		
CHAIN WIDTH:	mm	inch	°
FIRST RADIUS R:			
CURVE ANGLE α:			
N. OF TRACKS:			
TRANSVERSAL PITCH P:			
BASIC WIDTH B:			
TOTAL WIDTH W:			
INFEED LENGTH L:			

Copyright Regina Catene Calibrate s.p.a. - 2020, All rights reserved

LOW PIN CENTER CURVES

For Matveyor® SIDEFLEXING CHAINS

Low Pin Center curves include both upper and return parts.

CHAIN WIDTH	TRANSVERSAL PITCH P		BASIC WIDTH B		INFEED/ OUTFEED LENGHT	
	mm	inch	mm	inch	mm	inch
4 ½"	116	4.57	125	5.92	-	-

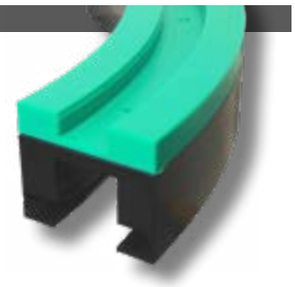

Single track

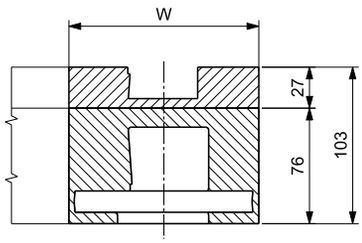

Multi track

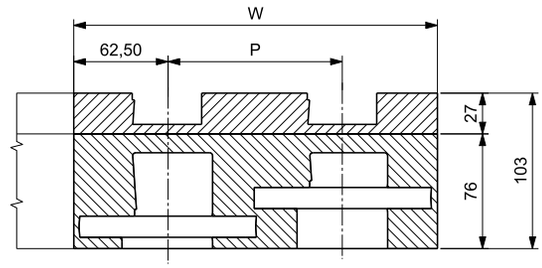

Radius

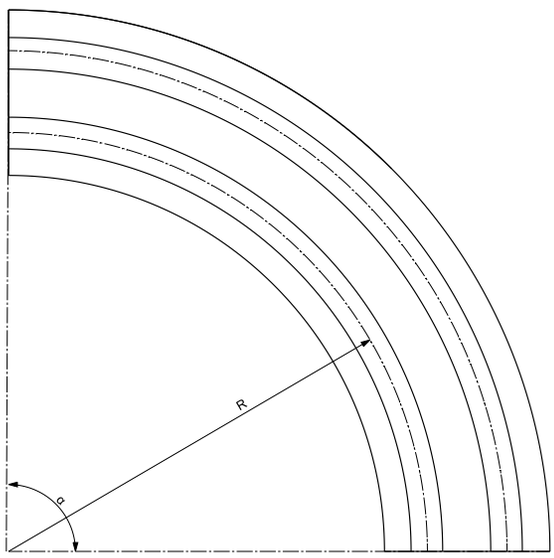

On request, Upper part is available in Self-Lubricating UHMWPE & Oil-filled PA.

PART NUMBER IDENTIFICATION

CURVES	SUPREME -A	NEW e-SLIDE	SUPREME -S
UPPER PART MATERIAL	UHMWPE	High performance Self-lubricating UHMWPE	Oil-filled PA
PART NUMBERS	See table below	Replace "L93" with "L93E" Example: Radius 610 mm, 1 track, 90° curve angle, P/N: L93EKGC1C/0000	Replace "L93" with "L93P" Example: Radius 610 mm, 1 track, 90° curve angle, P/N: L93PKGC1C/0000

Curve material see page 14

CHAIN TYPE		RADIUS* R		N. OF TRACKS	TOTAL WIDTH W		PART NUMBER Curve angle α					
Series	Width	mm	inch		mm	inch	15°	30°	45°	60°	75°	90°
793L	4 ½"	610	24.02	1	125	4.92	**L93KGC1C/0F00**	**L93KGC1C/0E00**	**L93KGC1C/0C00**	**L93KGC1C/0B00**	**L93KGC1C/0L00**	**L93KGC1C/0000**
				2	241	9.49	**L93KGC2C/0F80**	**L93KGC2C/0E80**	**L93KGC2C/0C80**	**L93KGC2C/0B80**	**L93KGC2C/0L80**	**L93KGC2C/0080**
				3	357	14.06	**L93KGC3C/0F80**	**L93KGC3C/0E80**	**L93KGC3C/0C80**	**L93KGC3C/0B80**	**L93KGC3C/0L80**	**L93KGC3C/0080**
				4	473	18.62	**L93KGC4C/0F80**	**L93KGC4C/0E80**	**L93KGC4C/0C80**	**L93KGC4C/0B80**	**L93KGC4C/0L80**	**L93KGC4C/0080**
				5	589	23.19	**L93KGC5C/0F80**	**L93KGC5C/0E80**	**L93KGC5C/0C80**	**L93KGC5C/0B80**	**L93KGC5C/0L80**	**L93KGC5C/0080**

* First track is intended.
NOTE: for custom requests with dimensions different from the standard, please refer to page 329.

Copyright Regina Catene Calibrate s.p.a. - 2020, All rights reserved

TAB CURVES

On request, Low Pin Center curves with dimensions different from the standard can be supplied.
Please fill the form below with the requested parameters and contact REGINA customer service.

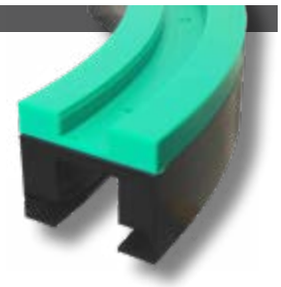

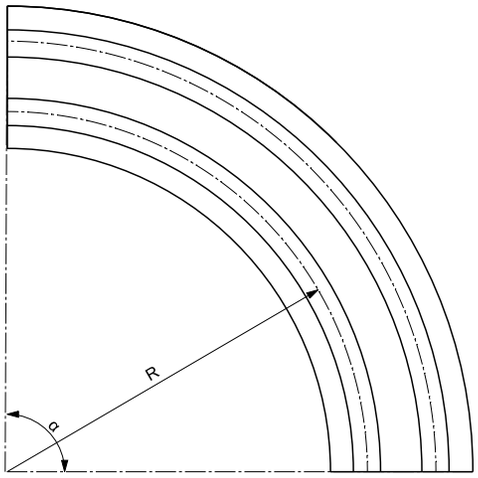

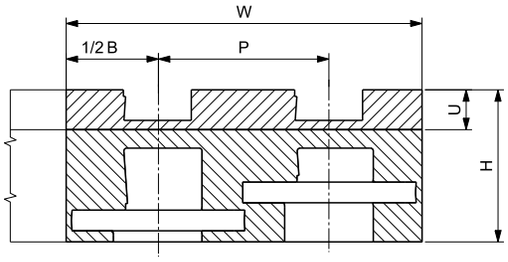

FOR CHAIN SERIES:	REQUESTED CURVE PARAMETERS		
CHAIN WIDTH:	mm	inch	°
FIRST RADIUS R:			
CURVE ANGLE α:			
N. OF TRACKS:			
TRANSVERSAL PITCH P:			
BASIC WIDTH B:			
TOTAL WIDTH W:			
INFEED LENGTH L:			

Copyright Regina Catene Calibrate s.p.a. - 2020, All rights reserved

PERFORMANCE IN MOTION

FliteTop® Matveyor® ULTOP®

Conveyor Components

MODULAR TRANSFER PLATES WITH ROLLERS

Modular transfer plates with rollers create a smooth transfer head between two conveyors.
They are available in 85 mm and 115 mm width and they can be used individually or back to back.

MATERIALS		
PLATE AND ROLLERS:	UP	ULTRA PERFORMANCE HOMOPOLYMER DELRIN ®
SCREWS*:	SS	STAINLESS STEEL

*Screws are included in the transfer plate.

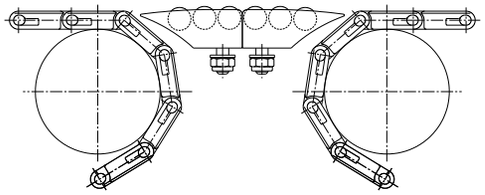

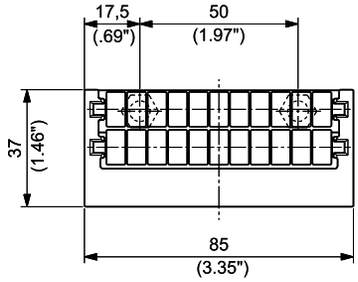

PART NUMBER **LTP-2RKQ**

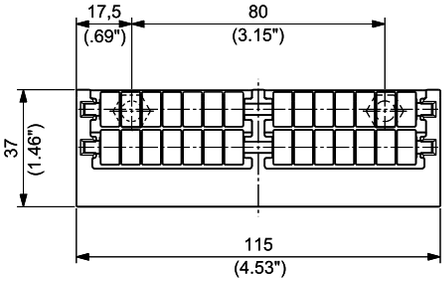

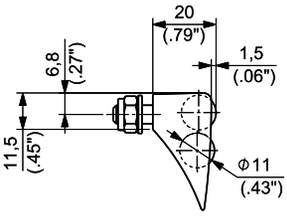

PART NUMBER **LTP-2RKG**

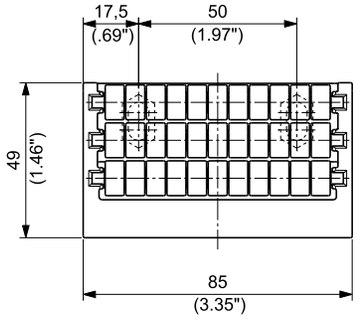

PART NUMBER **LTP-3RKQ**

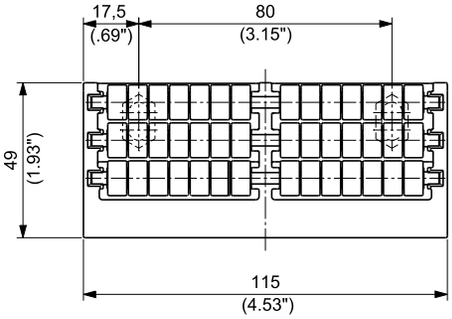

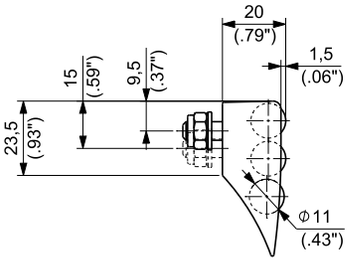

PART NUMBER **LTP-3RKG**

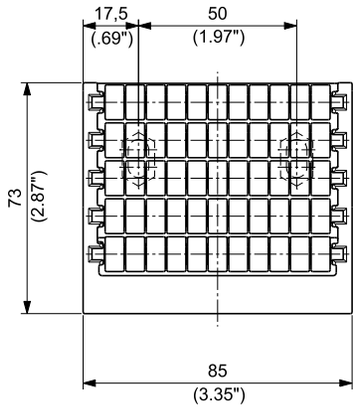

PART NUMBER **LTP-5RKQ**

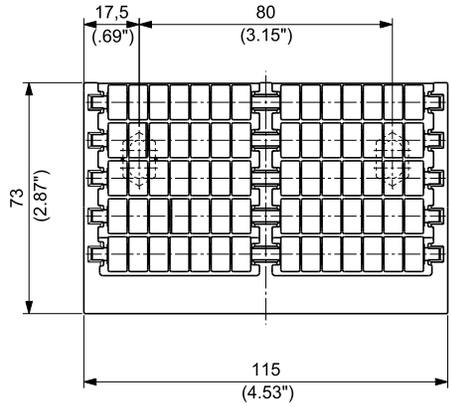

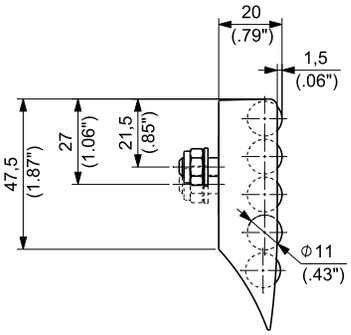

PART NUMBER **LTP-5RKG**

Standard packaging:
10 pieces

Conveyor Components

Copyright Regina Catene Calibrate s.p.a. - 2020, All rights reserved

RETURN ROLLERS

NEW

Completely closed design for high hygiene standard, suitable also for food applications.
Extremely lightweight design and optimum rotation capability.
No absorption of liquids and lubricants combined with high chemical resistance.

MATERIALS	
ROLLERS:	**HDPE** HD POLYETHYLENE

STANDARD ROLLER

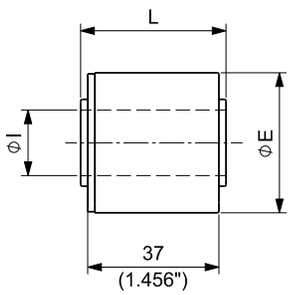

FLANGED ROLLER

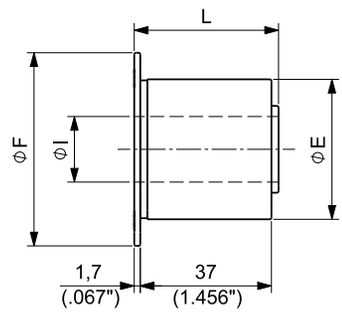

DOUBLE ROLLER

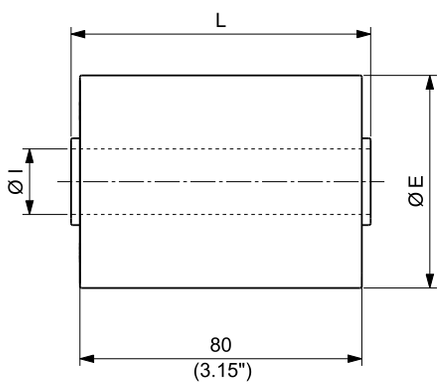

FLANGED DOUBLE ROLLER

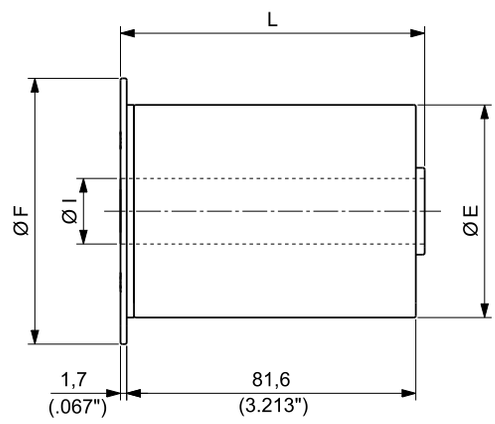

VERSION	EXTERNAL DIAMETER Ø E		LENGTH L		FLANGE DIAMETER Ø F		PART NUMBER FOR SHAFT DIAMETER Ø I			
	mm	inch	mm	inch	mm	inch	16 mm	18 mm	¾"	20 mm
STANDARD ROLLER	40	1.575	41,0	1.614	-	-	**CC000424**	**CC000427**	**CC000430**	**CC000433**
	50	1.969	41,0	1.614	-	-	**CC000425**	**CC000428**	**CC000431**	**CC000434**
	60	2.362	41,0	1.614	-	-	**CC000426**	**CC000429**	**CC000432**	**CC000435**
DOUBLE ROLLER	40	1.575	82,5	3.248	-	-	**CC000054**	**CC000060**	**CC000066**	**CC000072**
			84,5	3.327	-	-	**CC000055**	**CC000061**	**CC000067**	**CC000073**
	50	1.969	82,5	3.248	-	-	**CC000056**	**CC000062**	**CC000068**	**CC000074**
			84,5	3.327	-	-	**CC000057**	**CC000063**	**CC000069**	**CC000075**
	60	2.362	82,5	3.248	-	-	**CC000058**	**CC000064**	**CC000070**	**CC000076**
			84,5	3.327	-	-	**CC000059**	**CC000065**	**CC000071**	**CC000077**
FLANGED ROLLER	40	1.575	41,0	1.614	55	2.165	**CC000448**	**CC000451**	**CC000454**	**CC000457**
	50	1.969	41,0	1.614	65	2.559	**CC000449**	**CC000452**	**CC000455**	**CC000458**
	60	2.362	41,0	1.614	75	2.953	**CC000450**	**CC000453**	**CC000456**	**CC000459**
FLANGED DOUBLE ROLLERS	40	1.575	85,8	3.378	55	2.165	**CC000102**	**CC000105**	**CC000108**	**CC000111**
	50	1.969	85,8	3.378	65	2.559	**CC000103**	**CC000106**	**CC000109**	**CC000112**
	60	2.362	85,8	3.378	75	2.953	**CC000104**	**CC000107**	**CC000110**	**CC000113**

Standard packaging:
50 pieces

Copyright Regina Catene Calibrate s.p.a. - 2020, All rights reserved

RUBBERIZED RETURN ROLLERS

NEW

Completely closed design for high hygiene standard, suitable also for food applications. The external rubber layer guarantees high grip with the chain (superior roller rotation capability), minimum chain wear and reduced noise level.

MATERIALS		
ROLLERS:	HDPE	HD POLYETHYLENE
RUBBER:	TPE	THERMOPLASTIC Hardness: 65 ShA

STANDARD RUBBERIZED ROLLER

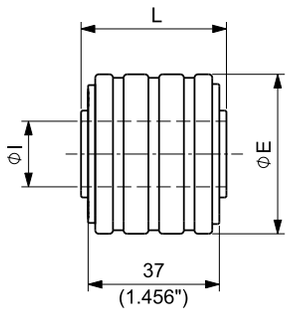

FLANGED RUBBERIZED ROLLER

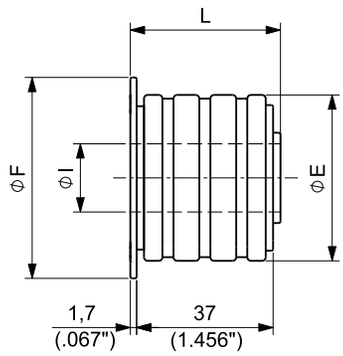

DOUBLE RUBBERIZED ROLLER

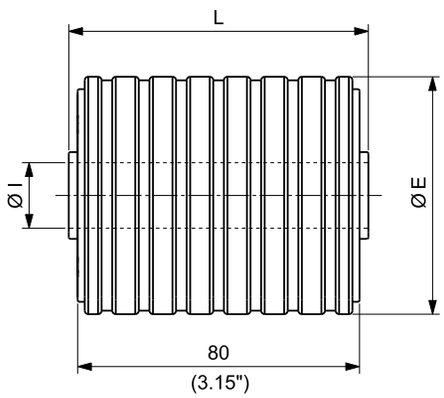

FLANGED RUBBERIZED DOUBLE ROLLER

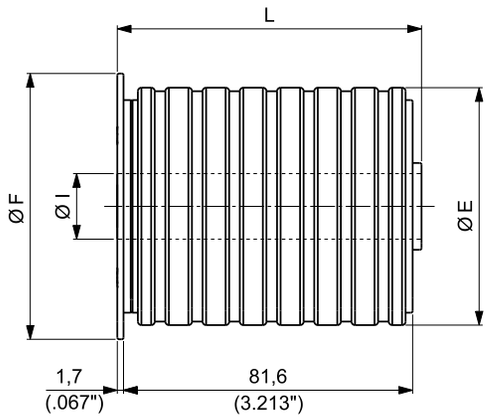

VERSION	EXTERNAL DIAMETER Ø E		LENGTH L		FLANGE DIAMETER Ø F		PART NUMBER FOR SHAFT DIAMETER $Ø_I$			
	mm	inch	mm	inch	mm	inch	16 mm	18 mm	¾"	20 mm
STANDARD RUBBERIZED ROLLER	45	1.772	41,0	1.614	-	-	**CC000436**	**CC000439**	**CC000442**	**CC000445**
	57	2.244	41,0	1.614	-	-	**CC000437**	**CC000440**	**CC000443**	**CC000446**
	67	2.638	41,0	1.614	-	-	**CC000438**	**CC000441**	**CC000444**	**CC000447**
DOUBLE RUBBERIZED ROLLER	45	1.772	82,5	3.248	-	-	**CC000078**	**CC000084**	**CC000090**	**CC000096**
			84,5	3.327	-	-	**CC000079**	**CC000085**	**CC000091**	**CC000097**
	57	2.244	82,5	3.248	-	-	**CC000080**	**CC000086**	**CC000092**	**CC000098**
			84,5	3.327	-	-	**CC000081**	**CC000087**	**CC000093**	**CC000099**
	67	2.638	82,5	3.248	-	-	**CC000082**	**CC000088**	**CC000094**	**CC000100**
			84,5	3.327	-	-	**CC000083**	**CC000089**	**CC000095**	**CC000101**
FLANGED RUBBERIZED ROLLER	45	1.772	41,0	1.614	55	2.165	**CC000460**	**CC000463**	**CC000466**	**CC000469**
	57	2.244	41,0	1.614	65	2.559	**CC000461**	**CC000464**	**CC000467**	**CC000470**
	67	2.638	41,0	1.614	75	2.953	**CC000462**	**CC000465**	**CC000468**	**CC000471**
FLANGED RUBBERIZED DOUBLE ROLLER	45	1.772	85,8	3.378	55	2.165	**CC000114**	**CC000117**	**CC000120**	**CC000123**
	57	2.244	85,8	3.378	65	2.559	**CC000115**	**CC000118**	**CC000121**	**CC000124**
	67	2.638	85,8	3.378	75	2.953	**CC000116**	**CC000119**	**CC000122**	**CC000125**

Standard packaging: 50 pieces

Copyright Regina Catene Calibrate s.p.a. - 2020, All rights reserved

GUIDE FLANGES

NEW

Lightweight design with excellent chemical resistance and no liquids absorption.

MATERIALS		
FLANGES:	**PP**	POLYPROPYLENE

STANDARD FLANGE

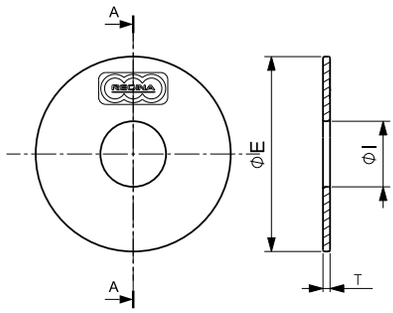

REDUCED THICKNESS FLANGE

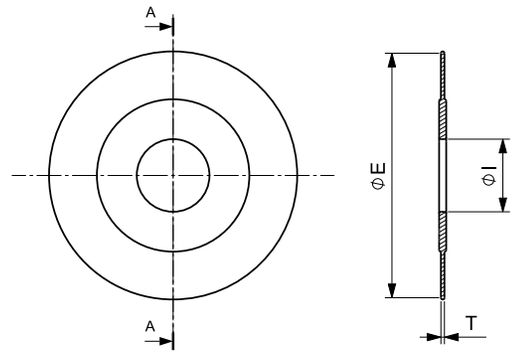

VERSION	EXTERNAL DIAMETER Ø E		THICKNESS T		PART NUMBER FOR SHAFT DIAMETER Ø$_I$			
	mm	inch	mm	inch	16 mm	18 mm	¾"	20 mm
STANDARD FLANGE	55	2.165	2,0	0.079	**CC000126**	**CC000129**	**CC000132**	**CC000135**
	65	2.559	2,0	0.079	**CC000127**	**CC000130**	**CC000133**	**CC000136**
	75	2.953	2,0	0.079	**CC000128**	**CC000131**	**CC000134**	**CC000137**
REDUCED THICKNESS FLANGE	40	1.575	1,0	0.039	**CC000138**	**CC000139**	**CC000140**	**CC000141**
	70	2.756	1,0	0.039	**CC000142**	**CC000143**	**CC000144**	**CC000145**

Standard packaging:
100 pieces

RETURN SHOE GUIDE

NEW

The use of the shoe guide is recommended to support LBP chains in return parts and after the catenary sag close to drive sprockets.

MATERIALS		
RETURN SHOE GUIDE:	**HDPE**	HD POLYETHYLENE

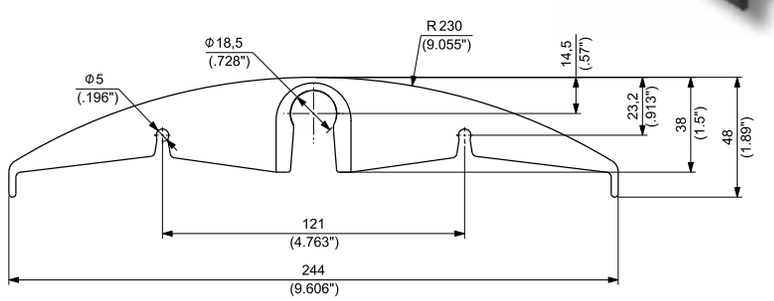

PART NUMBER **CC000150**

Copyright Regina Catene Calibrate s.p.a. - 2020, All rights reserved

CHAIN GUIDE WEAR STRIPS

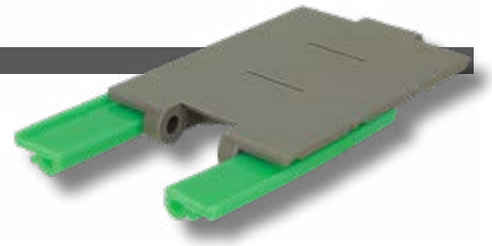

Very low coefficient of friction for low chain pull and energy saving.
High wear resistance for extended chains and wear strips life.

L-PROFILE

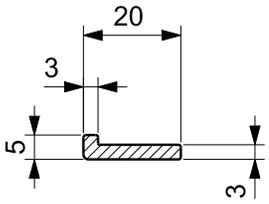

MATERIAL	PART NUMBER	STANDARD PACKAGING
UHMWPE	**WS003BC**	60 M COILS
UHMWPE	**WS003GC**	60 M COILS

APPLICATION

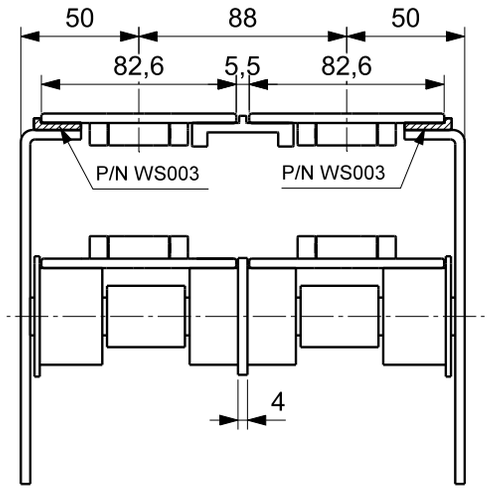

Z-PROFILE

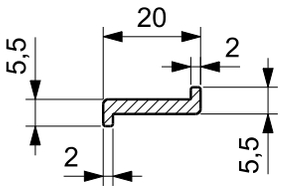

MATERIAL	PART NUMBER	STANDARD PACKAGING
UHMWPE	**WS001BC**	60 M COILS
UHMWPE	**WS001GC**	60 M COILS

APPLICATION

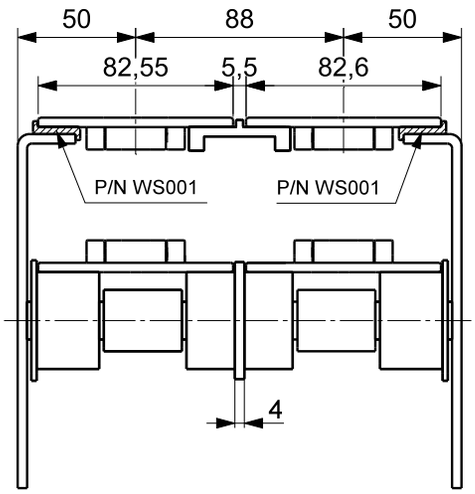

Z REINFORCED-PROFILE

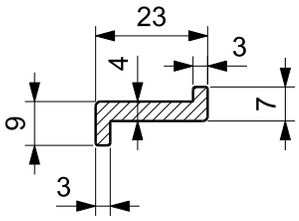

MATERIAL	PART NUMBER	STANDARD PACKAGING
UHMWPE	**WS004BC**	60 M COILS
UHMWPE	**WS004GC**	60 M COILS
NEW e-SLIDE	**WS004EC**	60 M COILS

APPLICATION

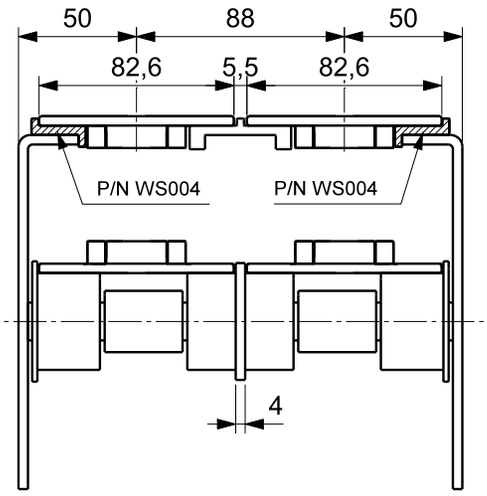

Copyright Regina Catene Calibrate s.p.a. - 2020, All rights reserved

CHAIN GUIDE WEAR STRIPS

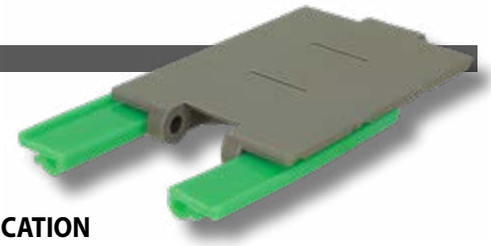

LS-PROFILE

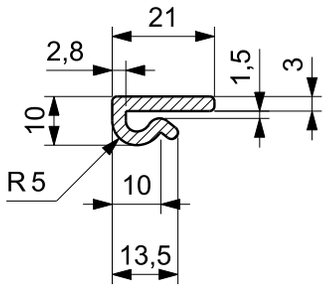

MATERIAL	PART NUMBER	STANDARD PACKAGING
UHMWPE	WS008BC	60 M COILS
UHMWPE	WS008GC	60 M COILS
NEW e-SLIDE	WS008EC	60 M COILS

APPLICATION

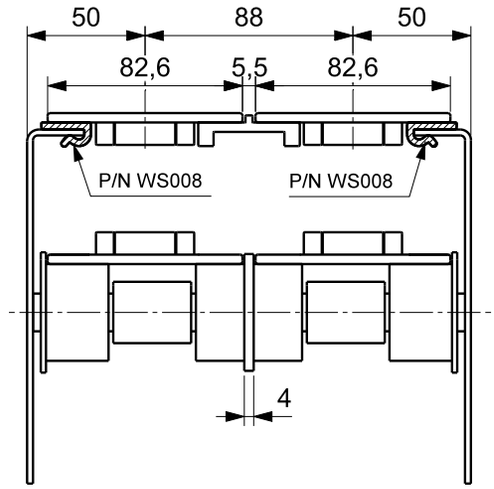

ZS-PROFILE

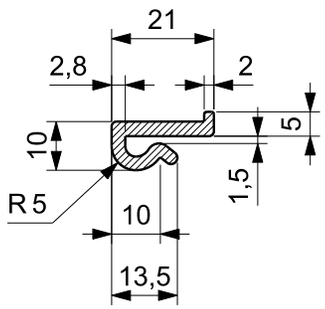

MATERIAL	PART NUMBER	STANDARD PACKAGING
UHMWPE	WS007BC	60 M COILS
UHMWPE	WS007GC	60 M COILS
NEW e-SLIDE	WS007EC	60 M COILS

APPLICATION

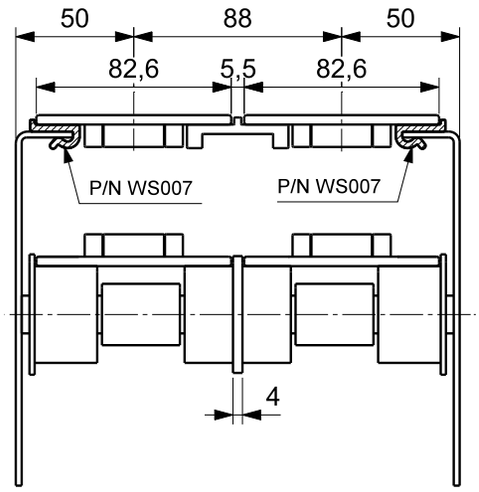

T-PROFILE

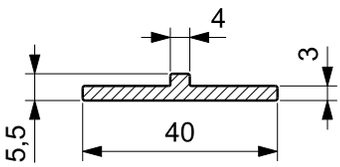

MATERIAL	PART NUMBER	STANDARD PACKAGING
UHMWPE	WS002BC	60 M COILS
UHMWPE	WS002GC	60 M COILS

APPLICATION

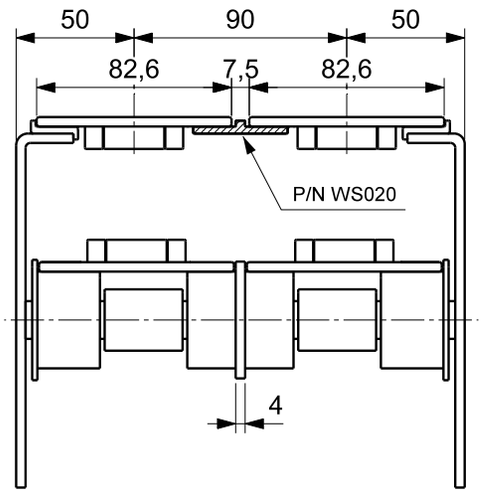

Copyright Regina Catene Calibrate s.p.a. - 2020, All rights reserved

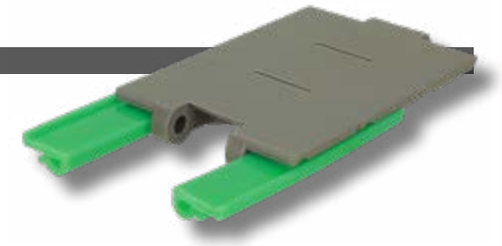

U-PROFILE

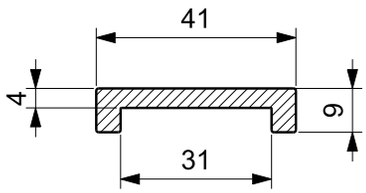

MATERIAL	PART NUMBER	STANDARD PACKAGING
UHMWPE	WS006BS	3 M BARS
	WS006BL	6 M BARS
UHMWPE	WS006GS	3 M BARS
	WS006GL	6 M BARS
NEW e-SLIDE	WS006ES	3 M BARS
	WS006EL	6 M BARS

APPLICATION

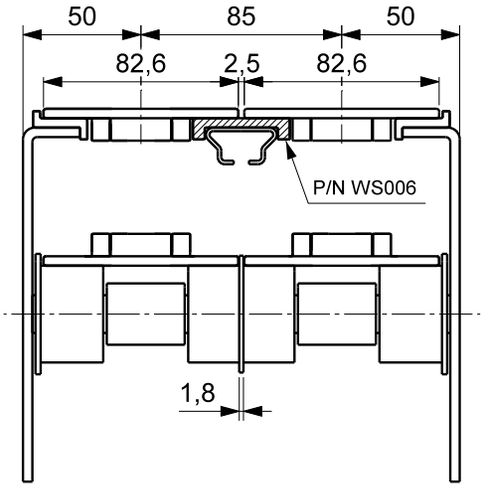

T-PROFILE

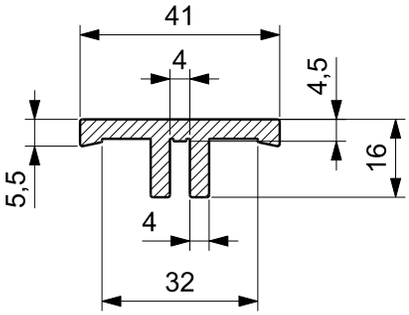

MATERIAL	PART NUMBER	STANDARD PACKAGING
UHMWPE	WS022BS	3 M BARS
UHMWPE	WS022GS	3 M BARS

APPLICATION

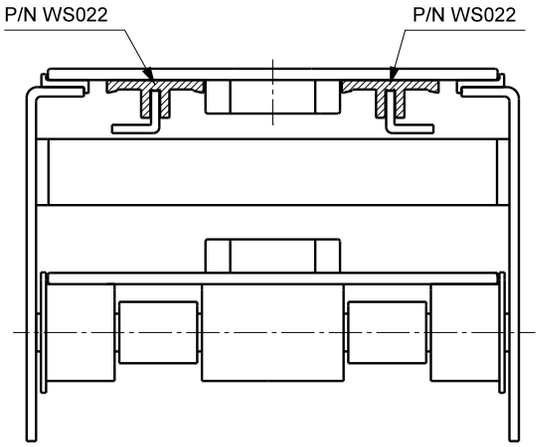

Copyright Regina Catene Calibrate s.p.a. - 2020, All rights reserved

CHAIN GUIDE WEAR STRIPS

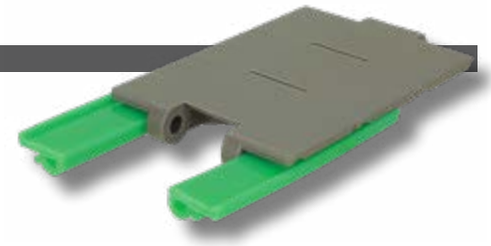

U-PROFILE

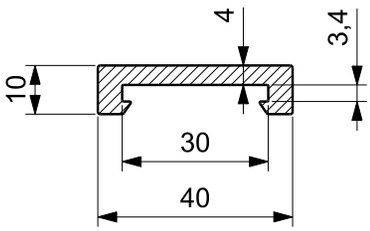

MATERIAL	PART NUMBER	STANDARD PACKAGING
UHMWPE	**WS023BS**	3 M BARS
	WS023BL	6 M BARS
UHMWPE	**WS023GS**	3 M BARS
	WS023GL	6 M BARS
NEW e-SLIDE	**WS023ES**	3 M BARS
	WS023EL	6 M BARS

APPLICATION

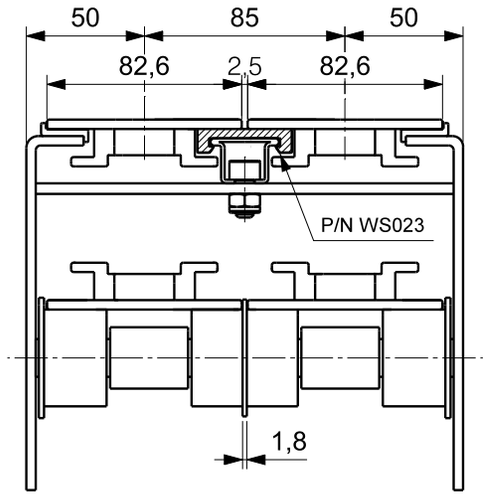

METAL PROFILE NEW

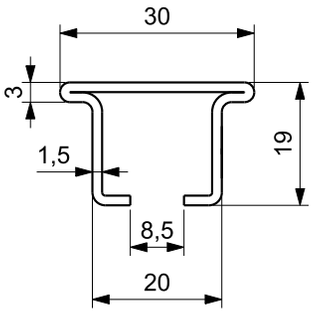

METAL PROFILE + U-PROFILE NEW

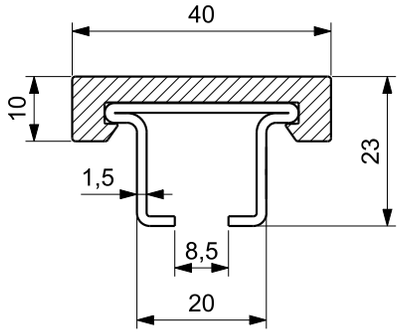

APPLICATION

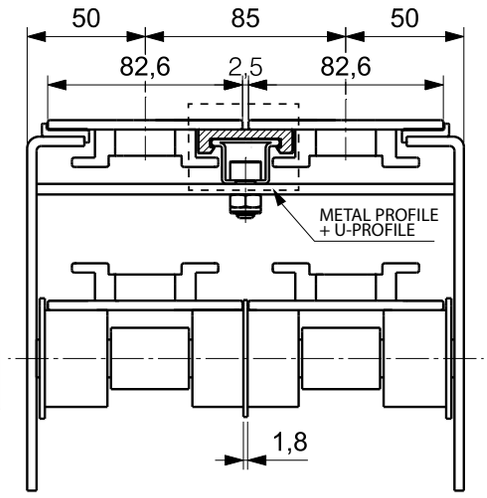

MATERIAL METAL PROFILE	MATERIAL U-PROFILE	PART NUMBER	LENGHT	STANDARD PACKAGING	WEIGHT
Austenitic stainless steel	- *(metal profile only)*	**CC000318**	3 M BARS	18 M	0,94 kg/m
		CC000319	6 M BARS *(On request)*	18 M	
Austenitic stainless steel	UHMWPE	**CC000322***	3 M BARS	18 M	1,15 kg/m
		CC000323*	6 M BARS *(On request)*	18 M	
	NEW e-SLIDE	**CC000324***	3 M BARS	18 M	
		CC000325*	6 M BARS *(On request)*	18 M	

*Metal profile and U-PROFILE are supplied assembled

Copyright Regina Catene Calibrate s.p.a. - 2020, All rights reserved

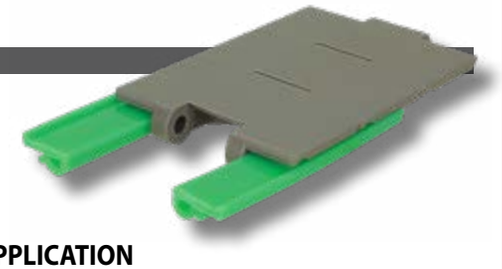

UR-PROFILE

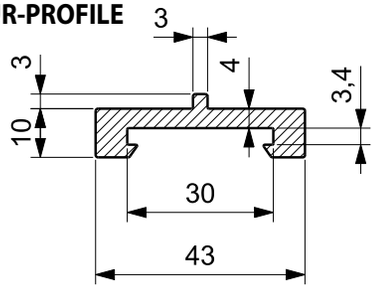

MATERIAL	PART NUMBER	STANDARD PACKAGING
UHMWPE	WS024BS	3 M BARS
	WS024BL	6 M BARS
UHMWPE	WS024GS	3 M BARS
	WS024GL	6 M BARS

APPLICATION

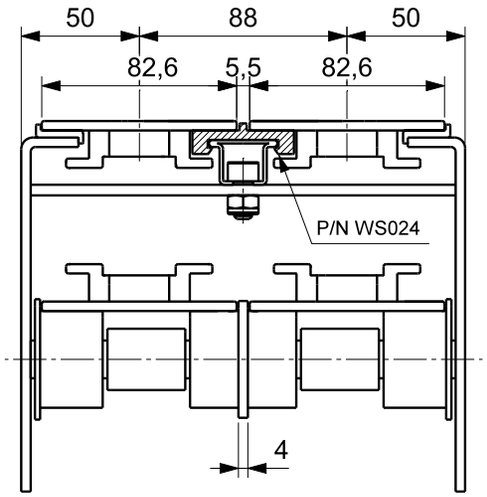

I-PROFILE

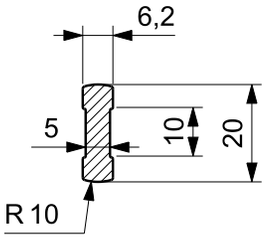

MATERIAL	PART NUMBER	STANDARD PACKAGING
UHMWPE	WS021BC	60 M COILS
UHMWPE	WS021GC	60 M COILS

APPLICATION

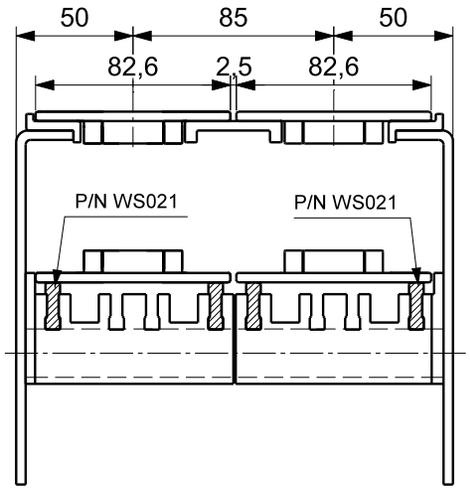

I-PROFILE

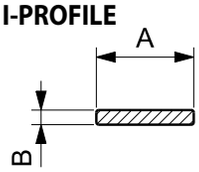

MATERIAL	PART NUMBER	AxB	STANDARD PACKAGING
UHMWPE	WS030BC	20x3	60 M COILS
	WS031BC	20x5	60 M COILS
	WS032BC	60x3	60 M COILS
	WS033BC	70x3	60 M COILS
UHMWPE	WS030GC	20x3	60 M COILS
	WS031GC	20x5	60 M COILS
	WS032GC	60x3	60 M COILS
	WS033GC	70x3	60 M COILS

APPLICATION

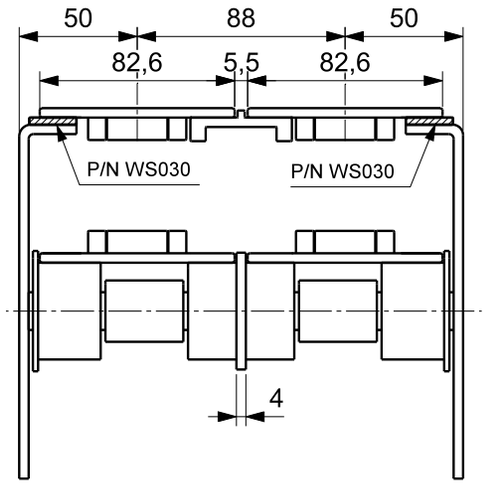

Copyright Regina Catene Calibrate s.p.a. - 2020, All rights reserved

CHAIN GUIDE WEAR STRIPS

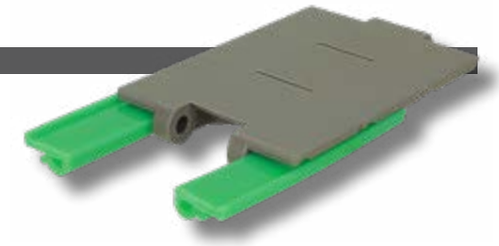

C-PROFILE

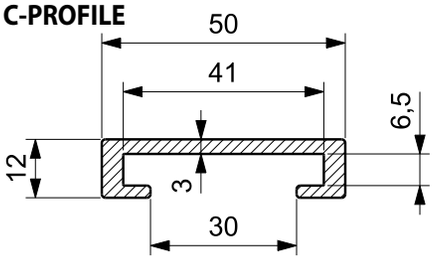

MATERIAL	PART NUMBER	STANDARD PACKAGING
UHMWPE	WS025BS	3 M BARS
	WS025BL	6 M BARS
UHMWPE	WS025GS	3 M BARS
	WS025GL	6 M BARS

APPLICATION

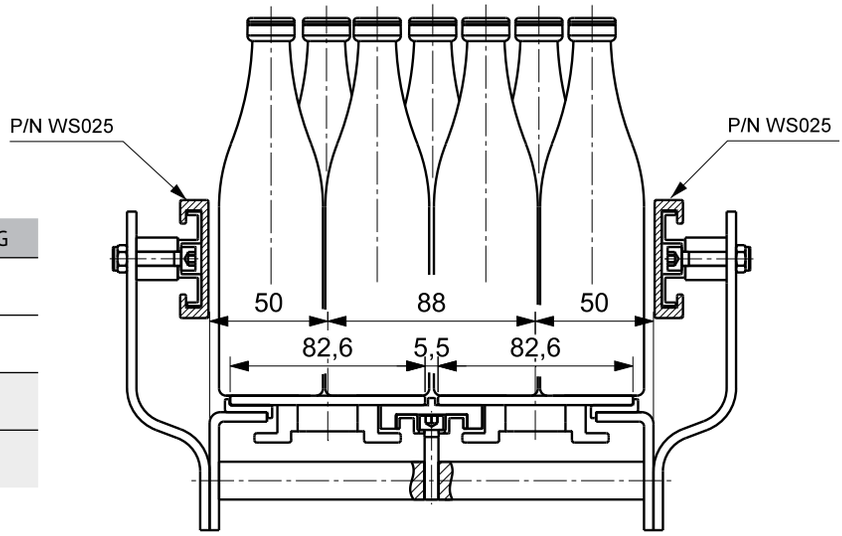

C-PROFILE

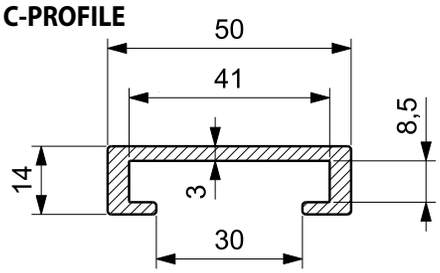

MATERIAL	PART NUMBER	STANDARD PACKAGING
UHMWPE	WS010BS	3 M BARS
	WS010BL	6 M BARS
UHMWPE	WS010GS	3 M BARS
	WS010GL	6 M BARS

APPLICATION

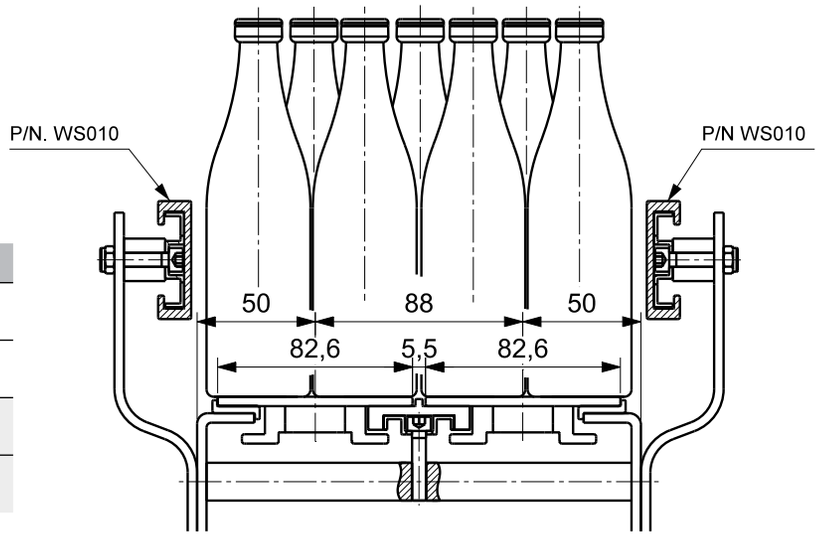

D-PROFILE

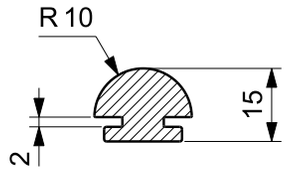

MATERIAL	PART NUMBER	STANDARD PACKAGING
UHMWPE	WS026BS	3 M BARS
	WS026BL	6 M BARS
UHMWPE	WS026GS	3 M BARS
	WS026GL	6 M BARS

APPLICATION

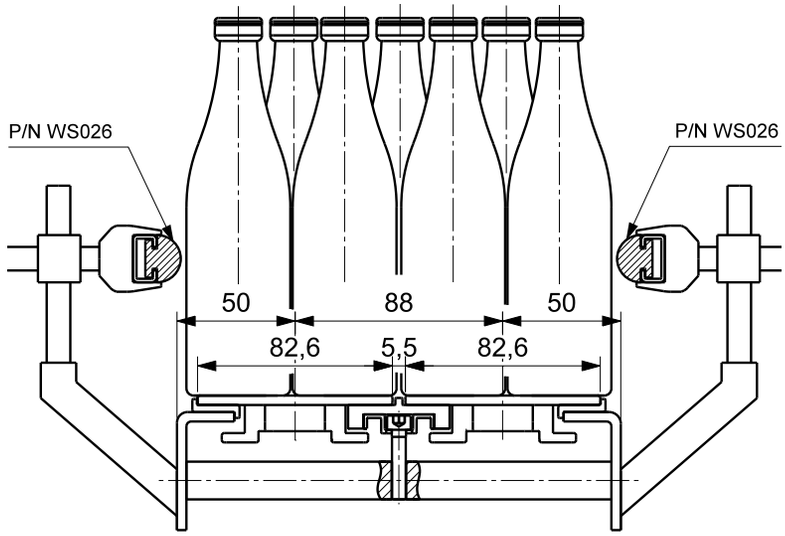

Copyright Regina Catene Calibrate s.p.a. - 2020, All rights reserved

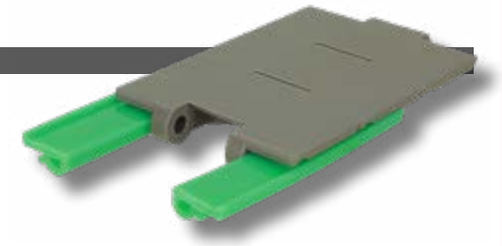

DF-PROFILE

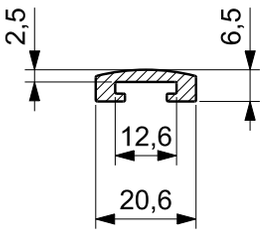

MATERIAL	PART NUMBER	STANDARD PACKAGING
UHMWPE	**WS027BS**	3 M BARS
	WS027BL	6 M BARS
UHMWPE	**WS027GS**	3 M BARS
	WS027GL	6 M BARS

APPLICATION

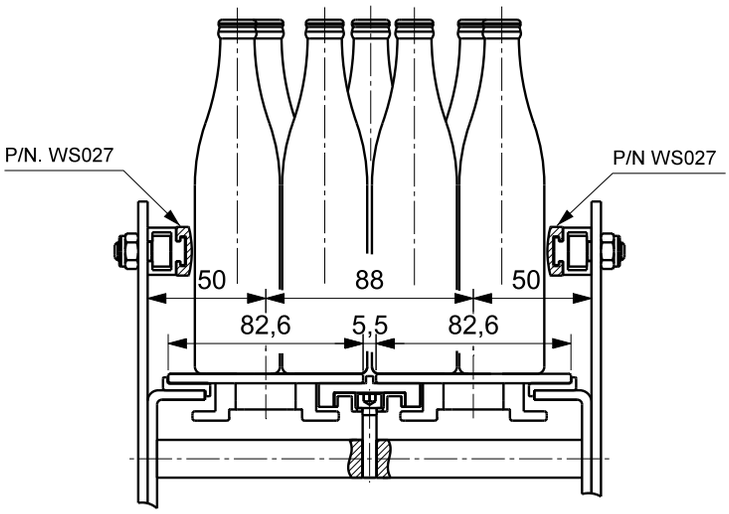

DR-PROFILE

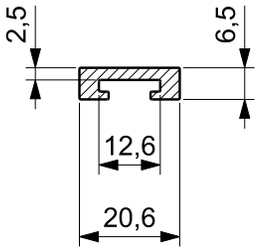

MATERIAL	PART NUMBER	STANDARD PACKAGING
UHMWPE	**WS028BS**	3 M BARS
	WS028BL	6 M BARS
UHMWPE	**WS028GS**	3 M BARS
	WS028GL	6 M BARS

APPLICATION

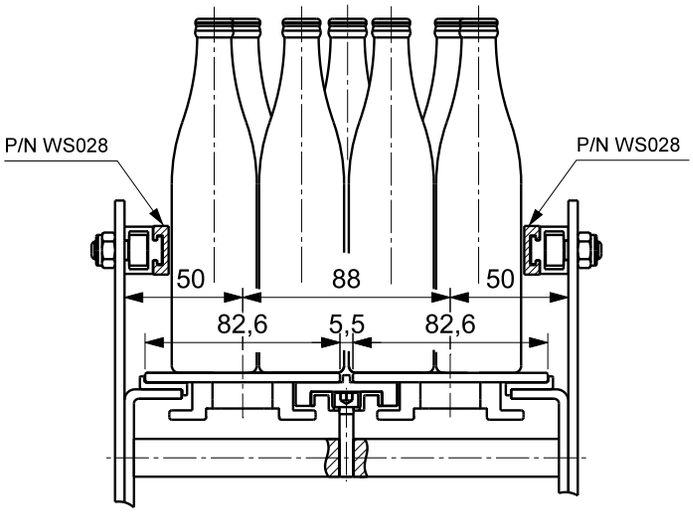

Copyright Regina Catene Calibrate s.p.a. - 2020, All rights reserved

PRODUCT SIDE GUIDES

The side guides provides low friction and smooth consistent contact with the products for the maximum sability.
It is ideal for PET or glass bottles, also where label protection is critical.
The side guides are supplied without clamp.
It can be ordered using the P/N CC000307.

NEW

LABEL PROTECTION PROFILE

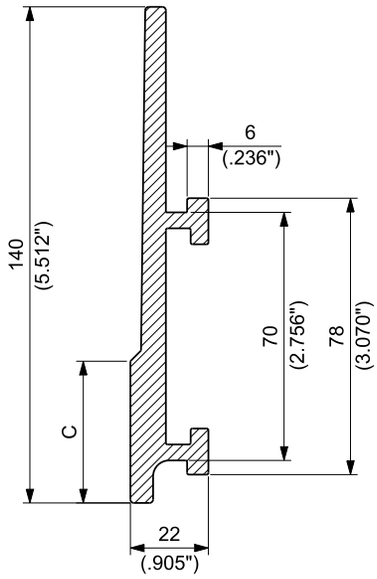

STAINLESS STEEL CLAMP

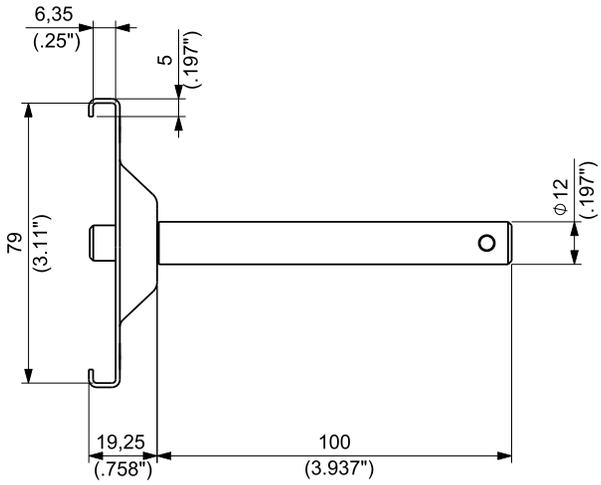

ASSEMBLY EXAMPLE

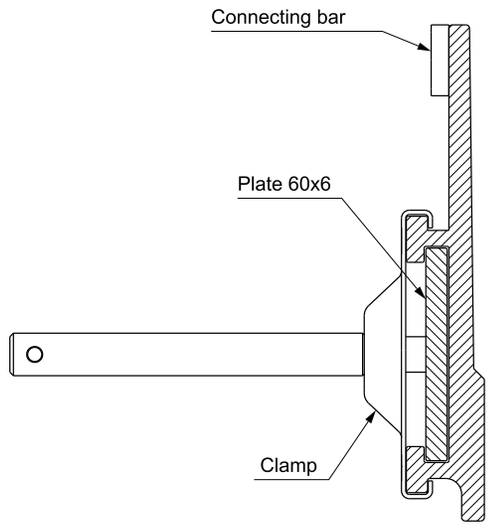

PART NUMBER **CC000307**

Standard packaging:
30 pieces

MATERIAL	VERSION	PART NUMBER	C mm	C inch	FOR PLATE mm	STANDARD PACKAGING
HDPE	NO LABEL PROTECTION	**CC000300**	-	-	60x6	3 M BARS
	WITH LABEL PROTECTION	**CC000303**	5	0.197		
		CC000301	20	0.787		
		CC000302	40	1.575		

Copyright Regina Catene Calibrate s.p.a. - 2020, All rights reserved

NOTE

Copyright Regina Catene Calibrate s.p.a. - 2020, All rights reserved

NOTE

Copyright Regina Catene Calibrate s.p.a. - 2020, All rights reserved

NOTE

Copyright Regina Catene Calibrate s.p.a. - 2020, All rights reserved

PERFORMANCE IN MOTION

ITALY

REGINA CATENE CALIBRATE S.p.A.
HEAD OFFICE:
Via Monza, 90
23870 Cernusco Lombardone (LC) - Italy
Tel. +39 039 99801
Fax +39 039 9905229
sales@reginachain.net

USA

REGINA USA, INC.
305 E. Mahn Court
Oak Creek, WI 53154 - USA
Tel. 001 414 5710032
Fax 001 414 5710225
sales.us@reginachain.net

FRANCE

REGINA INDUSTRIE s.a.r.l.
Z.A.C. des Chatelliers
34 Rue des Frères Lumière
45800 Saint Jean De Braye - France
Tel. +33 238 836363
Fax +33 238 836413
sales.fr@reginachain.net

MEXICO

REGINA de MEXICO S.A. de C.V.
Av. Aviación 5051-28
Col. San Juan de Ocotan
45019 Zapopan, Jalisco – Mexico
Tel. +52 33 3627 4043
Fax +52 33 3627 3930
sales.mx@reginachain.net

CHINA

REGINA TIANJIN CHAIN & BELT CO., LTD.
Xi Qing Economic Development Area,
Xiang Rui Road n. 17
Tian Xiang Industrial Zone
300385 Tian Jin - China
Tel. +86 22 83961223
Fax +86 22 83961202
sales.cn@reginachain.net

UNITED KINGDOM

REGINA INTERNATIONAL LIMITED
Unit 1, Dyneley Road,
Greenbank Business Park
Whitebirk, Blackburn,
Lancs BB1 3AB - United Kingdom
Tel. +44 1254 661116
Fax +44 1254 59456
sales.uk@reginachain.net

ARGENTINA

REGINA INTERNATIONAL S.A.
Diagonal 190,
1788-1655 Josè Leon Suarez
Prov. Buenos Aires – Argentina
Tel. +54 11 47296667
Fax +54 11 47203210
sales.ar@reginachain.net

GERMANY

REGINA CATENE CALIBRATE S.p.A.
BRANCH
Giselherstrasse 56
44319 - Dortmund - Germany
Tel. +49 231 95983001
sales.de@reginachain.net

SPAIN

CADENAS REGINA ESPAÑA, S.L.
Calle Industria, 37
08120 La Llagosta - Barcelona - España
Tel. +34 93 5742838
Fax +34 93 5740735
sales.es@reginachain.net

THE NETHERLANDS

SALES OFFICE
Tel. +31 610681114
sales.nl@reginachain.net

INDIA

SALES OFFICE
Tel. +91 9881399026
sales.in@reginachain.net

www.reginachain.net

V/CAT720e

Copyright Regina Catene Calibrate s.p.a. - 2020, All rights reserved