movexii.com

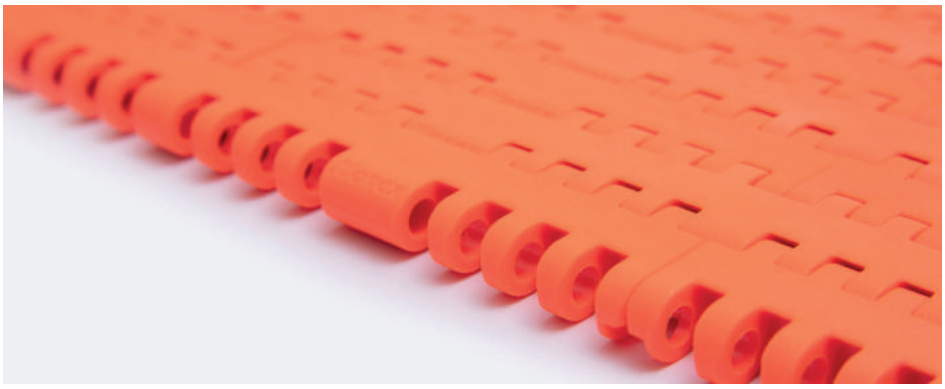



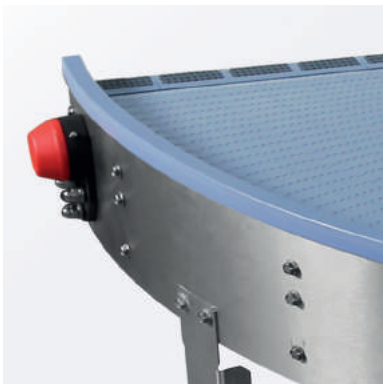

Metric Version

2019



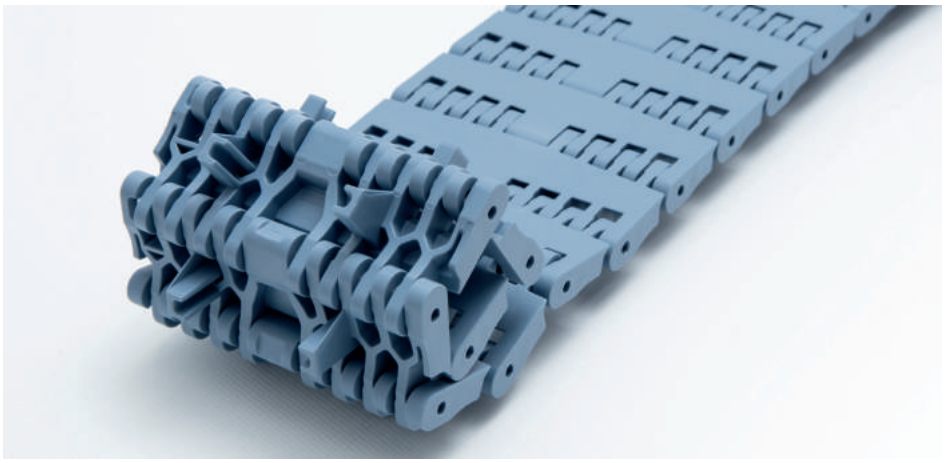

Movex®

PRODUCT CATALOG

Movex®
Facts

+40%

PRODUCTION CAPACITY

16.500 Mq²

OF PRODUCTION SPACE

REFERENCE YEAR 2018

+35%

WAREHOUSE CAPACITY

>23.000 DIFFERENT PRODUCTS AVAILABLE

>200 EMPLOYEES AROUND THE WORLD



MISSION

Creating value through innovative development of ideas, supporting our partners with professionalism, flexibility and effectiveness.

VISION

Reaching market leadership as a reliable and precise supplier. Planning the future without losing sight of our history and the values that allow our growth.

WE CREATE SOLUTIONS


Engineering Dept.

In the new headquarters **Movex** designs and manufactures high quality components for the food, beverage, packaging, automotive and automation industries.

Movex meets your needs for standard and custom products in a dynamic and responsive way ensuring the best performance product with an attractive market price.

RESEARCH & DEVELOPMENT



Research & development meeting

The rich experience that **Movex** has acquired over the years shows that care and innovation of products are essential to guarantee costant quality.

Thanks to the investments as well as developing strategic departments **Movex** has created new space where research and innovation become concrete tools to satisfy customers' requirements.

WE SUPPORT YOU


Customer service Dept.

A top service level is the goal of a qualified Engineering and Sales team with the objective of presenting **Movex** as a supplier of excellence to all clients.

Through a distribution/network which spans the globe, **Movex** offers technical support and a careful after-sales service, always at your disposal.

CONTACT US

Movex S.p.A.
Via Industria, 22 - 24060 Castelli Calepio (BG)
P +39 035 8359711 | F +39 035 4420873 | info@movexii.com

Movex around the world

Movex GmbH
P +49-6204-9375-0

Movex AG India
P +91-120-4159660-62

Movex USA Inc.
P +1-919-274-5477

Movex Brasil Ltda
P +55-15-3141-2550

Movex UK Ltd.
P +44-77-20678442

Movex SA de CV
P +52-1-3318458187

Movex France
P +33-0640592049

Movex Nederland
P +31-630-994850

Movex® is online!



Always connected.

Consult our catalog from your favorite device and request a free quotation.

www.movexii.com

RESPONSIVE



Movex® is App!

Stay updated on our latest news.

Discover more about us and our products.

Download it free today from the App store!

GET IT ON Google Play

Download on the App Store

Sommario
Table of contents / Inhaltsverzeichnis

Catene in acciaio
Steel chains / Scharnierbandketten aus Edelstahl **Pag 07**

Catene in plastica
Plastic chains / Scharnierbandketten aus Kunststoff **Pag 29**

Ruote dentate per catene
Chain sprockets / Kettenräder für Scharnierbandketten **Pag 81**

Ruote folli per catene
Chain idler wheels / Umlenkrollen für Scharnierbandketten **Pag 107**

Curve magnetiche, Tab & Bevel
Magnetic, Tab & Bevel corner tracks / Kurvenführungen Magnet, Tab & Bevel Version **Pag 111**

Tappeti modulari
Modular belts / Mattenketten **Pag 173**

Ruote per tappeti
Belt sprockets / Kettenräder für Mattenketten **Pag 265**

Guide estruse
Extruded profiles / Extrudiertes Profil **Pag 289**

Componenti di ritorno
Return components / Rückführelemente **Pag 347**

Componenti
Conveyor components / Komponenten **Pag 359**

Componenti di supporto
Conveyor support components / Stützelemente **Pag 413**

Cuscinetti
Bearing supports / Flanschlager **Pag 429**

Piedi
Leveling pads / Gelenkfüsse **Pag 455**

Manuale posizionamento ruote
Sprockets position manual / Kettenräder positionen manuell **Pag 481**

Materiali
Materials / Materialien **Pag 515**

Indice
Index / Index **Pag 530**

Movex®

movexii.com



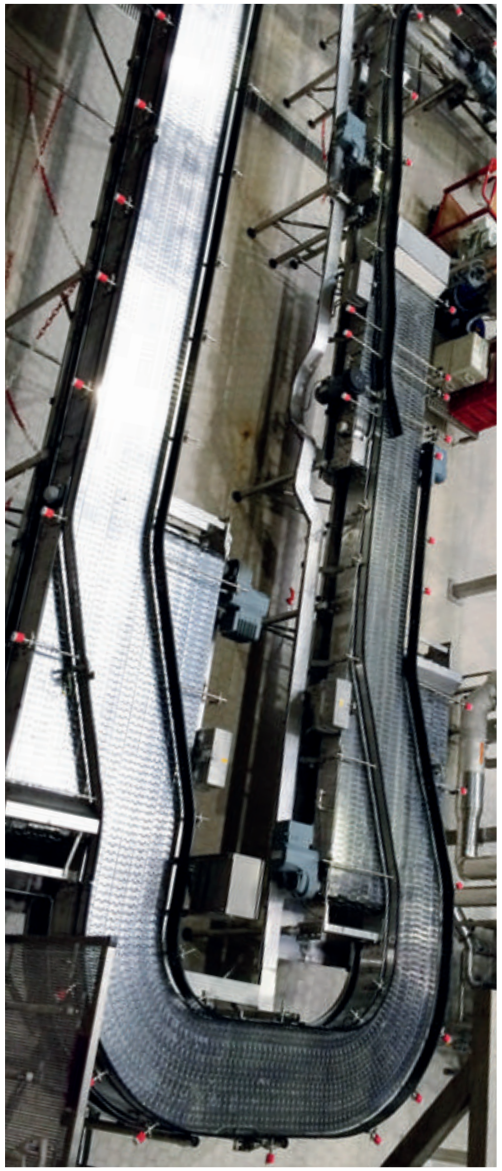



7

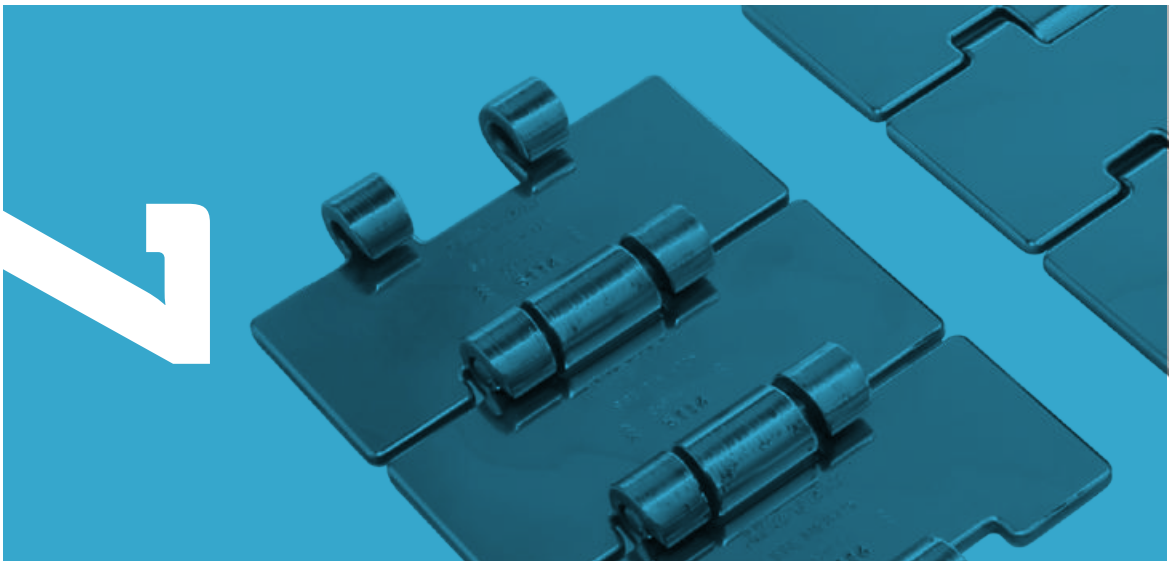

Steel chains

812/815
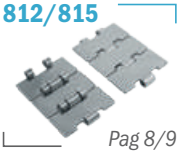
Pag 8/9

802/805
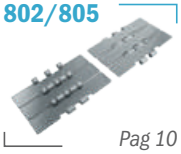
Pag 10

8157
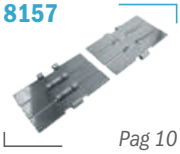
Pag 10

512

Pag 11

881 M

Pag 12/13

881 TAB

Pag 14

881 B

Pag 15

8811 TAB

Pag 16

8811 B
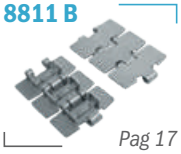
Pag 17

8857 M

Pag 18

815 MINI

Pag 19

812 GT/815 GT
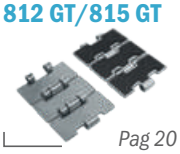
Pag 20

815 TAB GT

Pag 21

802 GT/805 GT
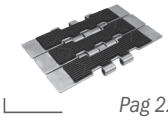
Pag 22

8157 GT

Pag 23

8811 TAB GT

Pag 24

881 M GT
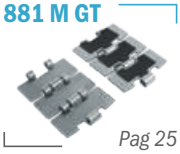
Pag 25

8857 M GT

Pag 26

1874 TAB

Pag 27

815 Catena rettilinea
Straight running chain / Geradegängige Scharnierbandkette

Pins: Martensitic 1.4057 | **Backflex radius min.:** 150 mm



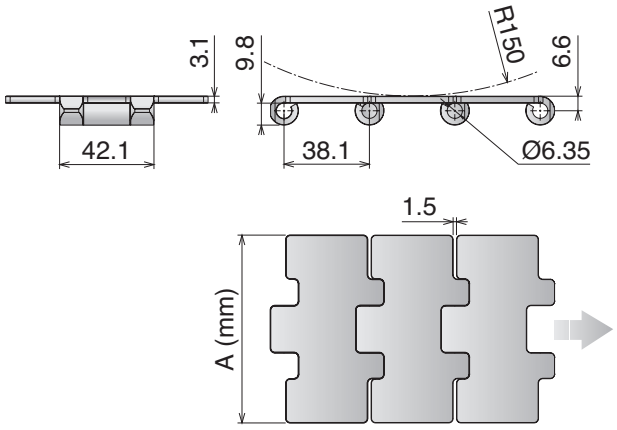

10 feet
3.048 m
80 links

82-83-97/108

pg. 525->528

Article-Nr.	Ref.	A (Plate Width) mm	Weight kg/m	Surface finish µm	Surface Flatness mm	Polished Hinge eyes	Max working load (N)	Plate Thickness mm
SSM Max Speed - Hardened pins								
10010302	**SSM 815 K325**	82,5	2,55	0,2	0,08	YES	6000	3,1
10010303	**SSM 815 K330**	83,8	2,59	0,2	0,08	YES		

Max Speed High Performance

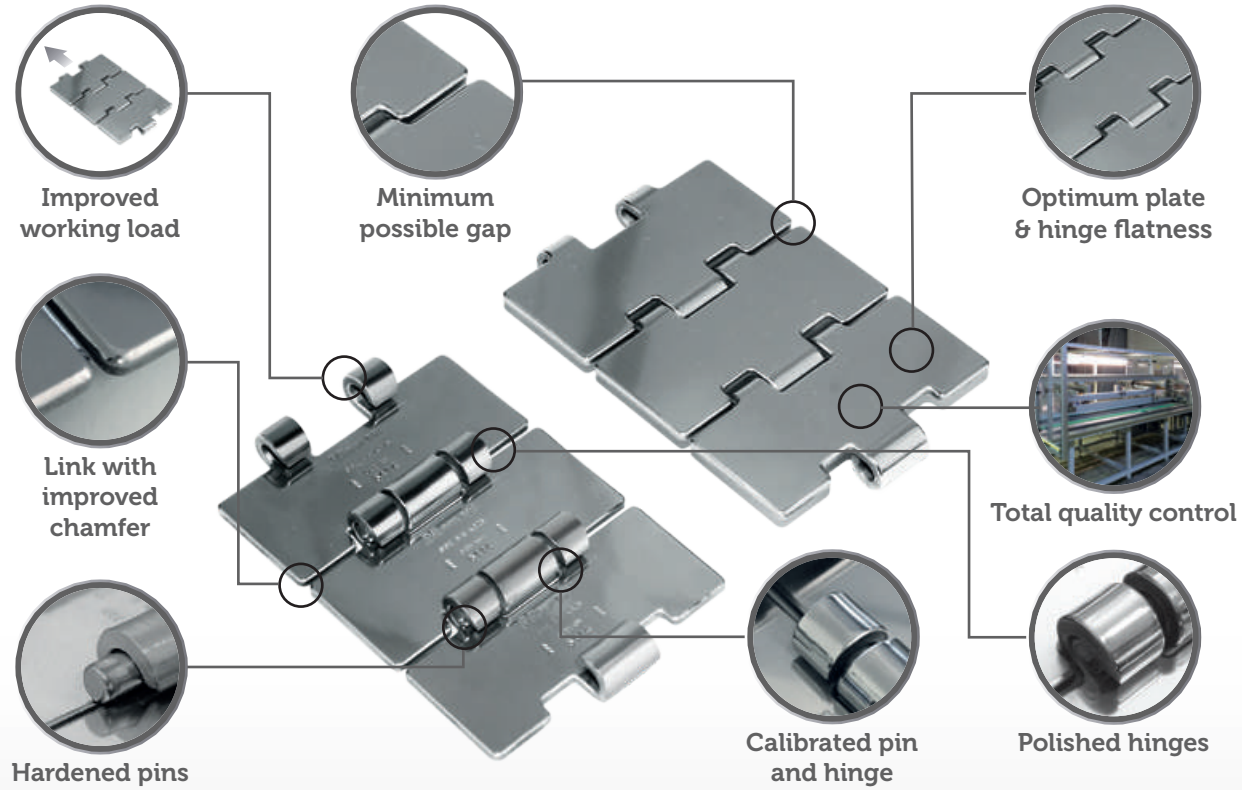

812/815

Catena rettilinea
Straight running chain / Geradegängige Scharnierbandkette

Pins: Martensitic 1.4057 | **Backflex radius min.:** 150 mm

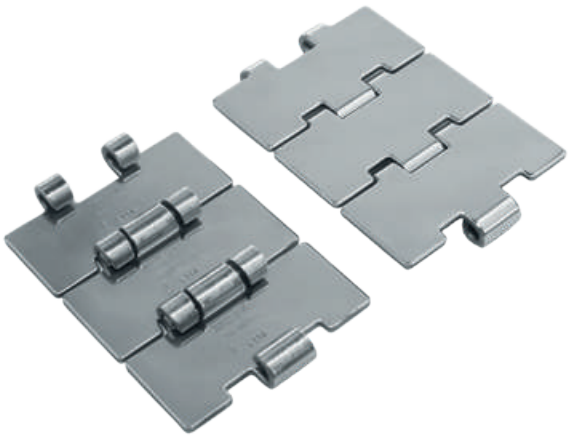

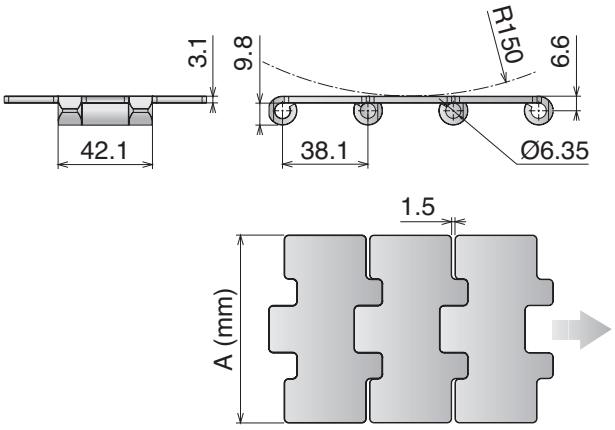

10 feet
3.048 m
80 links

82-83-97/108

pg. 525->528

Article-Nr.	Ref.	A (Plate Width) mm	Weight kg/m	Surface finish µm	Surface Flatness mm	Polished Hinge eyes	Max working load (N)	Plate Thickness mm
			SS *Ferritic Stainless Steel (1.4016)*					
10010216	SS 812 K300	76,2	2,50	0,5	0,15	NO	5400	3,1
10010202	SS 812 K325	82,5	2,55	0,5	0,15	NO		
10010203	SS 812 K330	83,8	2,59	0,5	0,15	NO		
10010204	SS 812 K350	88,9	2,69	0,5	0,15	NO		
10010214	SS 812 K400	101,6	3,00	0,5	0,15	NO		
10010205	SS 812 K450	114,3	3,25	0,5	0,20	NO		
10010206	SS 812 K600	152,4	4,15	0,5	0,30	NO		
10010207	SS 812 K750	190,5	5,05	0,5	0,30	NO		
			SSE *Specially treated Ferritic Stainless Steel (1.4589)* - **Hardened pins**					
10010102	SSE 815 K325	82,5	2,55	0,3	0,10	YES	6000	3,1
10010103	SSE 815 K330	83,8	2,59	0,3	0,10	YES		
10010104	SSE 815 K350	88,9	2,69	0,3	0,15	NO		
10010114	SSE 815 K400	101,6	3,00	0,3	0,15	NO		
10010105	SSE 815 K450	114,3	3,25	0,3	0,20	NO		
10010106	SSE 815 K600	152,4	4,15	0,3	0,30	NO		
10010107	SSE 815 K750	190,5	5,05	0,3	0,30	NO		
			SSA *Austenitic Stainless Steel (AISI 304) - Austenitic pin*					
10010402	SSA 815 K325	82,5	2,55	0,5	0,15	NO	5300	3,1
10010403	SSA 815 K330	83,8	2,59	0,5	0,15	NO		
10010404	SSA 815 K350	88,9	2,69	0,5	0,15	NO		
10010405	SSA 815 K450	114,3	3,25	0,5	0,20	NO		
10010406	SSA 815 K600	152,4	4,15	0,5	0,30	NO		
10010407	SSA 815 K750	190,5	5,05	0,5	0,30	NO		

802/805

Catena rettilinea
Straight running chain / Geradegängige Scharnierbandkette

Pins: Martensitic 1.4057 | **Backflex radius min.:** 150 mm

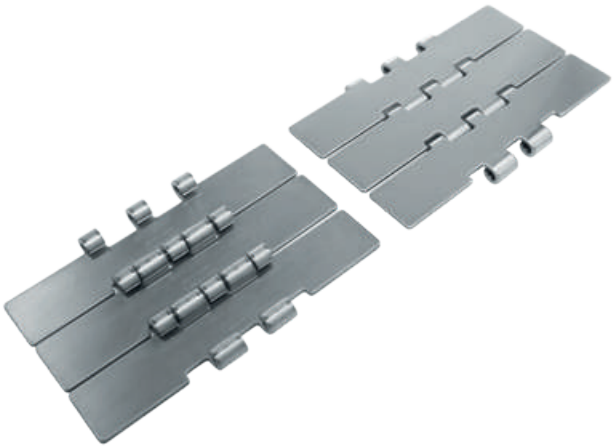

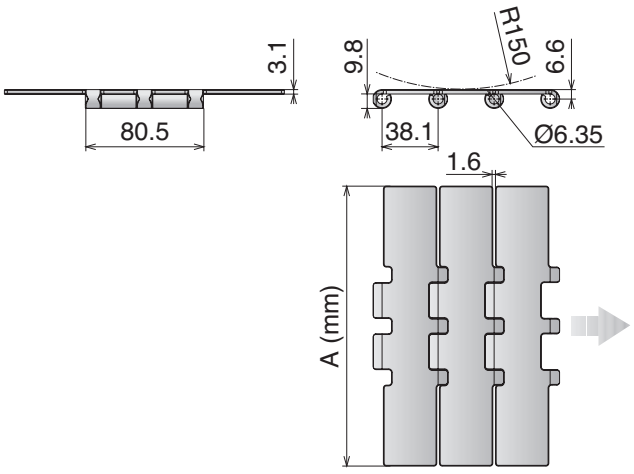

10 feet 3.048 m | 80 links | pg. 86-98-109 | pg. 525->528

Article-Nr.	Ref.	A (Plate Width) mm	Weight kg/m	Surface finish µm	Max working load (N)	Plate Thickness mm
		SS *Ferritic Stainless Steel (1.4016)*				
10030207	**SS 802 K750**	190,5	5,80	0,6	7000	3,1
		SSE *Specially treated Ferritic Stainless Steel (1.4589)* **- Hardened pins**				
10030107	**SSE 805 K750**	190,5	5,80	0,3	9000	3,1
		SSA *Austenitic Stainless Steel (AISI 304) - Austenitic pin*				
10030407	**SSA 805 K750**	190,5	5,80	0,6	8700	3,1

8157

Catena rettilinea
Straight running chain / Geradegängige Scharnierbandkette

Pins: Martensitic 1.4057 | **Backflex radius min.:** 130 mm

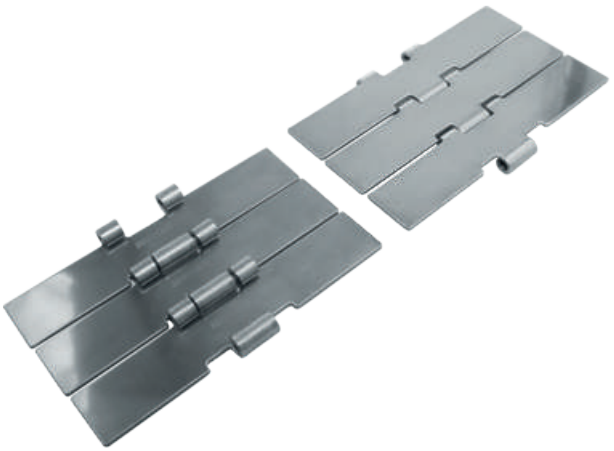

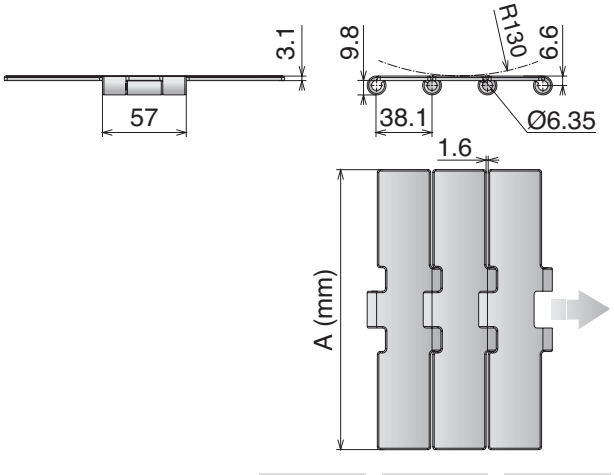

10 feet 3.048 m | 80 links | pg. 87-97-110 | pg. 525->528

Article-Nr.	Ref.	A (Plate Width) mm	Weight kg/m	Surface finish µm	Max working load (N)	Plate Thikness mm
		SSE *Specially treated Ferritic Stainless Steel (1.4589)* **- Hardened pins**				
10050107	**SSE 8157 K750**	190,5	5,60	0,3	7000	3,1

512 Catena rettilinea
Straight running chain / Geradegängige Scharnierbandkette

Pins: Martensitic 1.4057 | **Backflex radius min.:** 80 mm

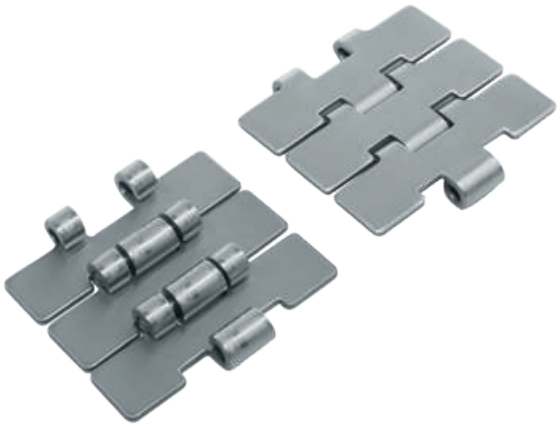

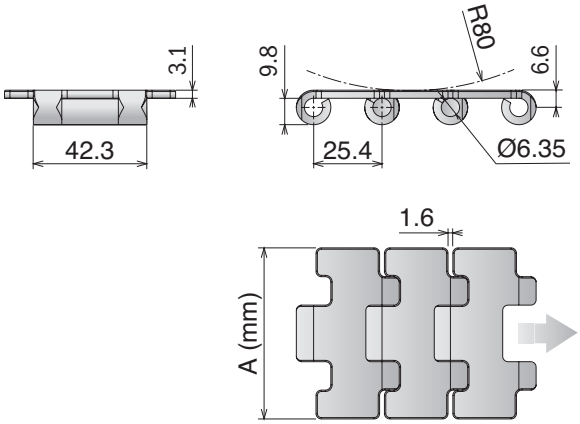

10 feet 3.048 m
120 links

pg. 96-99
pg. 525->528

Article-Nr.	Ref.	A (Plate Width) mm	Weight kg/m	Surface finish µm	Max working load (N)	Plate Thickness mm
			SSE *Specially treated Ferritic Stainless Steel (1.4589)* - **Hardened pins**			
10070100	**SSE 512 K217**	55,1	2,30	0,3		
10070101	**SSE 512 K236**	59,9	2,40	0,3		
10070108	**SSE 512 K250**	63,5	2,45	0,3		
10070109	**SSE 512 K283**	71,9	2,65	0,3	5000	3,1
10070102	**SSE 512 K325**	82,5	2,90	0,3		
10070104	**SSE 512 K350**	88,9	3,00	0,3		
10070114	**SSE 512 K400**	101,6	3,30	0,3		
			SSA *Austenitic Stainless Steel (AISI 304) - Austenitic pin*			
10070400	**SSA 512 K217**	55,1	2,30	0,3		
10070401	**SSA 512 K236**	59,9	2,40	0,3		
10070408	**SSA 512 K250**	63,5	2,45	0,3	4500	3,1
10070409	**SSA 512 K283**	71,9	2,65	0,3		
10070414	**SSA 512 K400**	101,6	3,30	0,3		

881 M

Catena curvilinea
Sideflexing chain / Kurvengängige Scharnierbandkette

Pins: Martensitic 1.4057 | **Backflex radius min.:** 80 mm

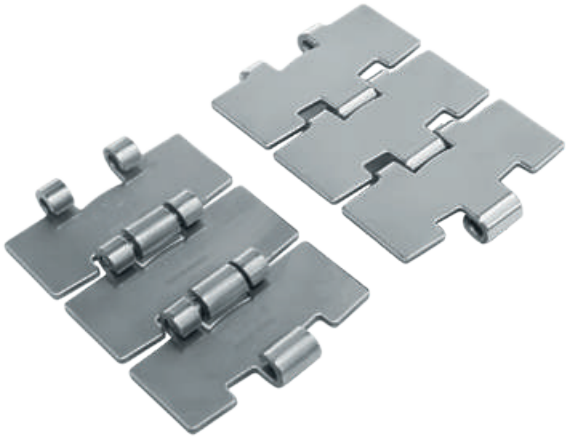

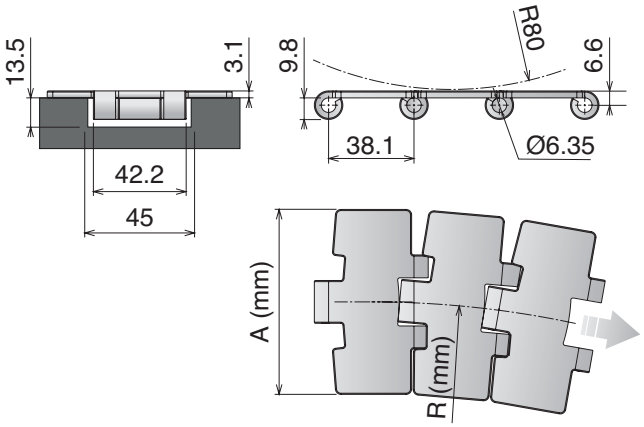

Magnetic System

10 feet 3.048 m | 80 links | pg. 84-85/110 | pg. 115->130 | pg. 525->528

Article-Nr.	Ref.	A (Plate Width) mm	R mm	Weight kg/m	Surface finish µm	Surface Flatness mm	Polished Hinge eyes	Max working load (N)	Plate Thickness mm
SSM Max Speed - Hardened pins									
10080302	SSM 881 M0 K325	82,5	500	2,55	0,2	0,08	YES	6000	3,1
10080303	SSM 881 M0 K330	83,8	500	2,59	0,2	0,08	YES		

Max Speed High Performance

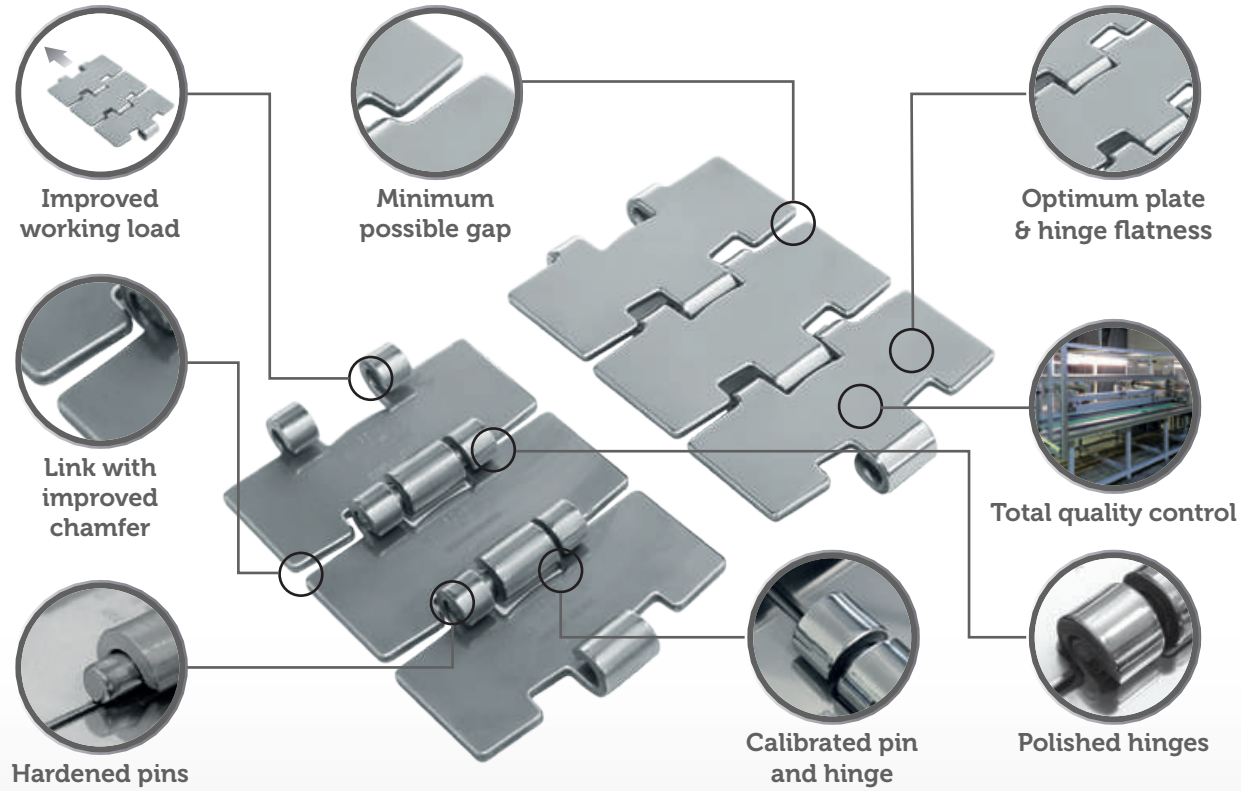

881 M

Catena curvilinea
Sideflexing chain / Kurvengängige Scharnierbandkette

Pins: Martensitic 1.4057 | **Backflex radius min.:** 80 mm

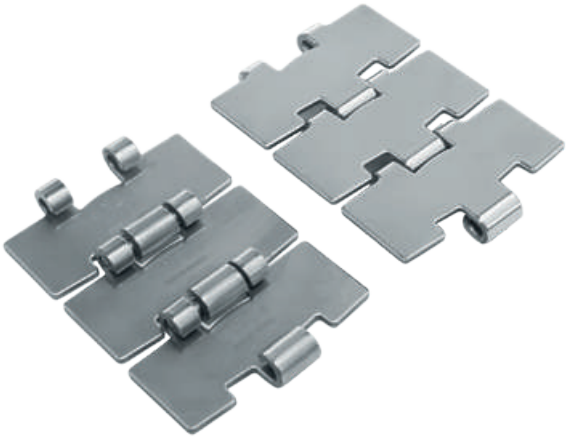

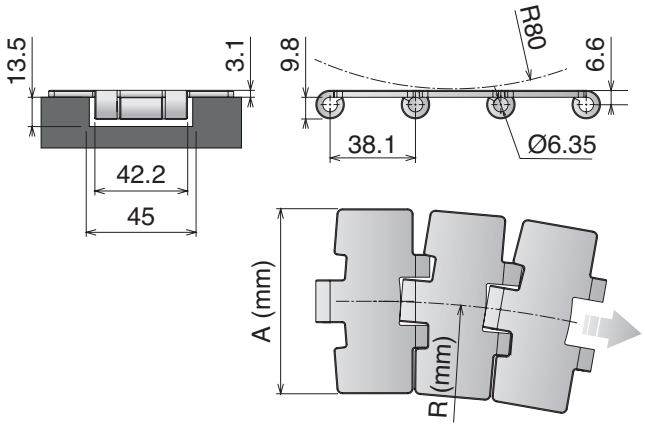

Magnetic System

10 feet 3.048 m
80 links

pg. 84-85/110
pg. 115->130
pg. 525->528

Article-Nr.	Ref.	A (Plate Width) mm	R mm	Weight kg/m	Surface finish µm	Surface Flatness mm	Polished Hinge eyes	Max working load (N)	Plate Thickness mm
				SS *Ferritic Stainless Steel (1.4016)*					
10080202	SS 881 M0 K325	82,5	500	2,55	0,5	0,15	YES	5400	3,1
10080203	SS 881 M0 K330	83,8	500	2,59	0,5	0,15	YES		
10080205	SS 881 M0 K450	114,3	500	3,10	0,5	0,20	YES		
10080207	SS 881 M0 K750	190,5	500	4,85	0,5	0,30	YES		
				SSE *Specially treated Ferritic Stainless Steel (1.4589)* - **Hardened pins**					
10080102	SSE 881 M0 K325	82,5	500	2,55	0,3	0,10	YES	6000	3,1
10080103	SSE 881 M0 K330	83,8	500	2,59	0,3	0,10	YES		
10080105	SSE 881 M0 K450	114,3	500	3,10	0,3	0,20	YES		
10080107	SSE 881 M0 K750	190,5	500	4,85	0,3	0,30	YES		

881 TAB

Catena curvilinea
Sideflexing chain / Kurvengängige Scharnierbandkette

Pins: Martensitic 1.4057 | **Backflex radius min.:** 80 mm

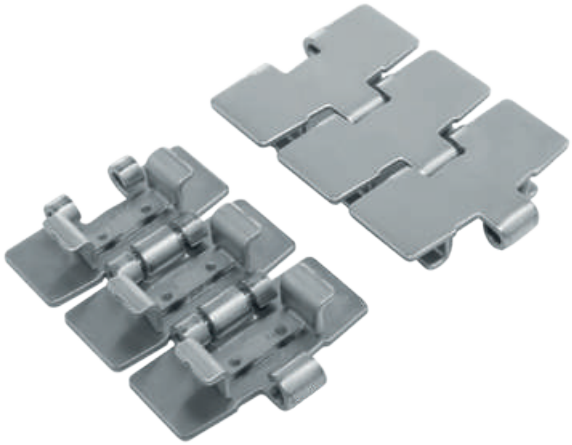

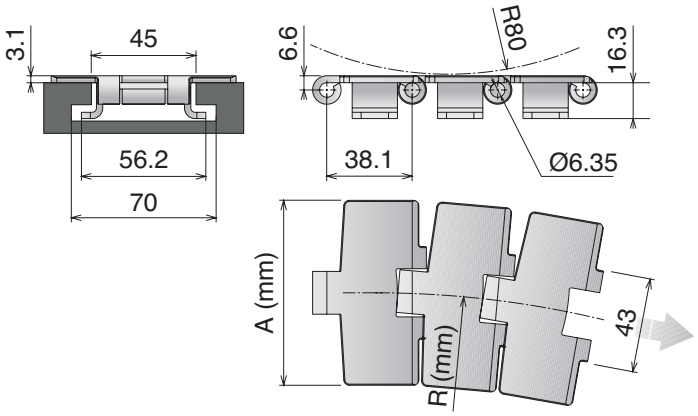

Tab System

10 feet 3.048 m | 80 links | pg. 84-85/110 | pg. 163/169 | pg. 525->528

Article-Nr.	Ref.	A (Plate Width) mm	R mm	Weight kg/m	Surface finish µm	Max working load (N)	Plate Thickness mm
			SS *Ferritic Stainless Steel (1.4016)*				
10100202	**SS 881 TAB K325**	82,5	457	3,00	0,3	5400	3,1
			SSE *Specially treated Ferritic Stainless Steel (1.4589)* **- Hardened pins**				
10100102	**SSE 881 TAB K325**	82,5	457	3,00	0,3		
10100105	**SSE 881 TAB K450**	114,3	500	3,69	0,3	6000	3,1
10100107	**SSE 881 TAB K750**	190,5	500	5,50	0,3		
			SSA *Austenitic Stainless Steel (AISI 304) - Austenitic pin*				
10100402	**SSA 881 TAB K325**	82,5	457	3,00	0,3		
10100405	**SSA 881 TAB K450**	114,3	500	3,69	0,3	4500	3,1
10100407	**SSA 881 TAB K750**	190,5	500	5,50	0,3		

881 B

Catena curvilinea
Sideflexing chain / Kurvengängige Scharnierbandkette

Pins: Martensitic 1.4057 | **Backflex radius min.:** 60 mm

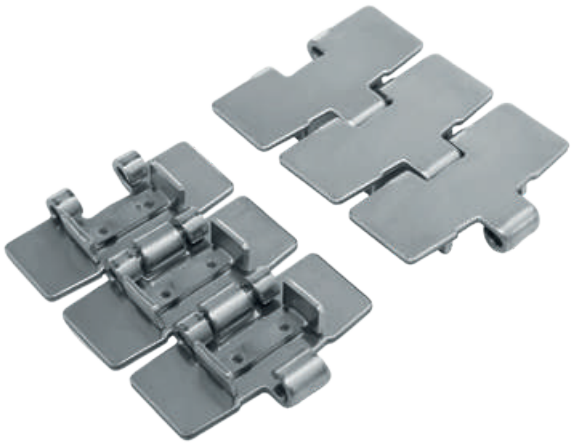

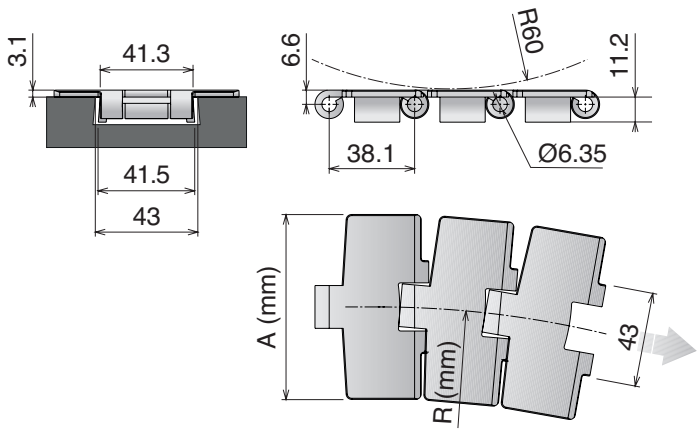

Bevel System

10 feet 3.048 m
80 links

pg. 84-85/110
pg. 168
pg. 525->528

Article-Nr.	Ref.	A (Plate Width) mm	R mm	Weight kg/m	Surface finish µm	Max working load (N)	Plate Thickness mm
			SSE *Specially treated Ferritic Stainless Steel (1.4589)* **- Hardened pins**				
10120102	**SSE 881 K325**	82,5	457	2,95	0,3	6000	3,1
10120104	**SSE 881 K350**	88,9	500	3,00	0,3		
10120105	**SSE 881 K450**	114,3	500	3,65	0,3		
10120107	**SSE 881 K750**	190,5	500	5,45	0,3		
			SSA *Austenitic Stainless Steel (AISI 304) - Austenitic pin*				
10120402	**SSA 881 K325**	82,5	457	2,95	0,3	4500	3,1
10120405	**SSA 881 K450**	114,3	500	3,65	0,3		
10120407	**SSA 881 K750**	190,5	500	5,45	0,3		

8811 TAB

Catena curvilinea
Sideflexing chain / Kurvengängige Scharnierbandkette

Pins: Martensitic 1.4057 | **Backflex radius min.:** 70 mm

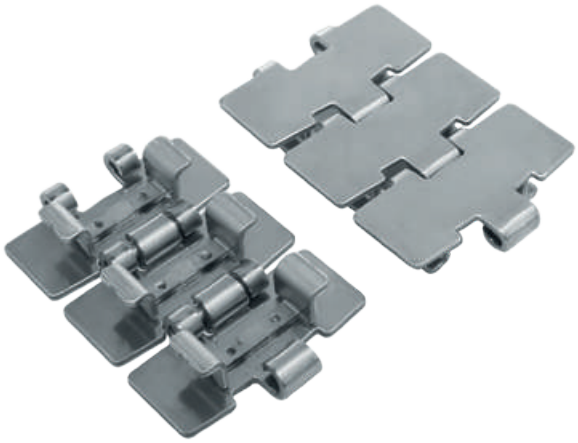

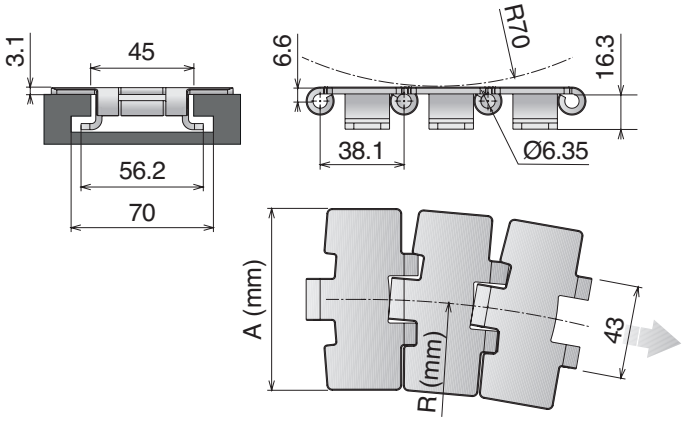

Tab System

10 feet 3.048 m | 80 links | pg. 84-85/110 | pg. 163/169 | pg. 525->528

Article-Nr.	Ref.	A (Plate Width) mm	R mm	Weight kg/m	Surface finish µm	Max working load (N)	Plate Thickness mm
			SS *Ferritic Stainless Steel (1.4016)*				
10140202	**SS 8811 TAB K325**	82,5	500	2,95	0,3	5400	3,1
10140203	**SS 8811 TAB K330**	83,8	500	3,05	0,3		
10140205	**SS 8811 TAB K450**	114,3	610	3,65	0,3		
10140207	**SS 8811 TAB K750**	190,5	610	5,45	0,3		
			SSE *Specially treated Ferritic Stainless Steel (1.4589)* **- Hardened pins**				
10140102	**SSE 8811 TAB K325**	82,5	500	2,95	0,3	6000	3,1
10140103	**SSE 8811 TAB K330**	83,8	500	3,05	0,3		
10140104	**SSE 8811 TAB K350**	88,9	500	3,15	0,3		
10140105	**SSE 8811 TAB K450**	114,3	500	3,65	0,3		
10140107	**SSE 8811 TAB K750**	190,5	500	5,45	0,3		
			SSA *Austenitic Stainless Steel (AISI 304) - Austenitic pin*				
10140402	**SSA 8811 TAB K325**	82,5	500	2,95	0,3	4500	3,1
10140403	**SSA 8811 TAB K330**	83,8	500	3,05	0,3		
10140405	**SSA 8811 TAB K450**	114,3	500	3,65	0,3		
10140407	**SSA 8811 TAB K750**	190,5	500	5,45	0,3		

8811 B

Catena curvilinea
Sideflexing chain / Kurvengängige Scharnierbandkette

Pins: Martensitic 1.4057 | **Backflex radius min.:** 80 mm

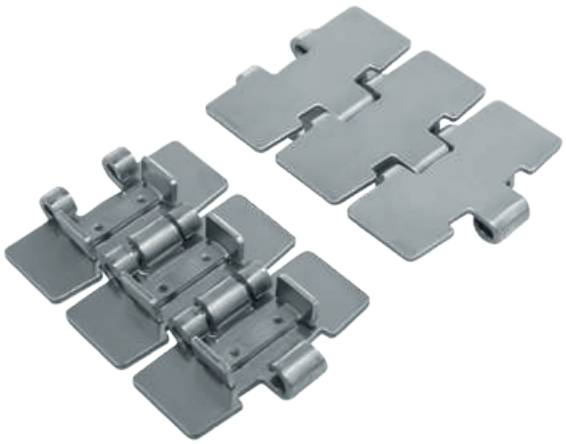

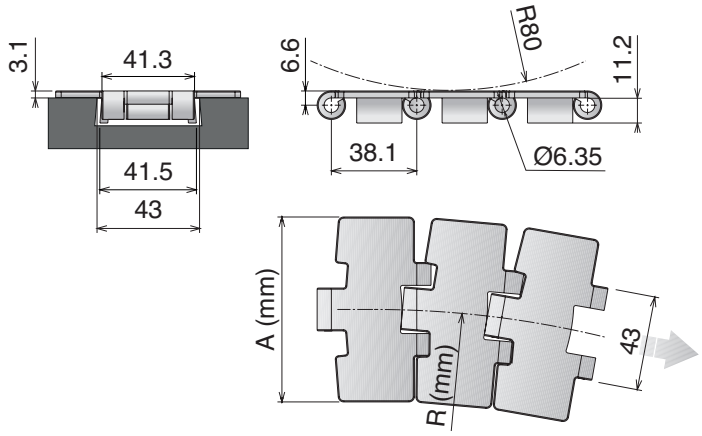

Bevel System

10 feet 3.048 m | 80 links | pg. 84-85/110 | pg. 168 | pg. 525->528

Article-Nr.	Ref.	A (Plate Width) mm	R mm	Weight kg/m	Surface finish µm	Max working load (N)	Plate Thickness mm
			SSE *Specially treated Ferritic Stainless Steel (1.4589)* - **Hardened pins**				
10160102	SSE 8811 K325	82,5	500	2,90	0,3	6000	3,1
10160104	SSE 8811 K350	88,9	500	3,15	0,3		
10160105	SSE 8811 K450	114,3	500	3,60	0,3		
10160107	SSE 8811 K750	190,5	500	5,40	0,3		
			SSA *Austenitic Stainless Steel (AISI 304) - Austenitic pin*				
10160402	SSA 8811 K325	82,5	500	2,90	0,3	4500	3,1
10160404	SSA 8811 K350	88,9	500	3,15	0,3		
10160405	SSA 8811 K450	114,3	500	3,60	0,3		
10160407	SSA 8811 K750	190,5	500	5,40	0,3		

8857 M

Catena curvilinea
Sideflexing chain / Kurvengängige Scharnierbandkette

Pins: Martensitic 1.4057 | **Backflex radius min.:** 80 mm

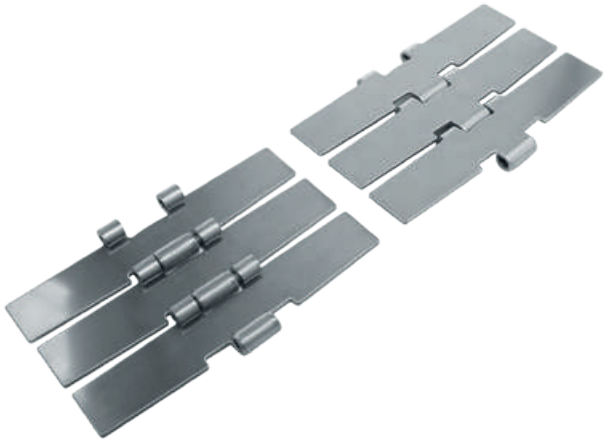

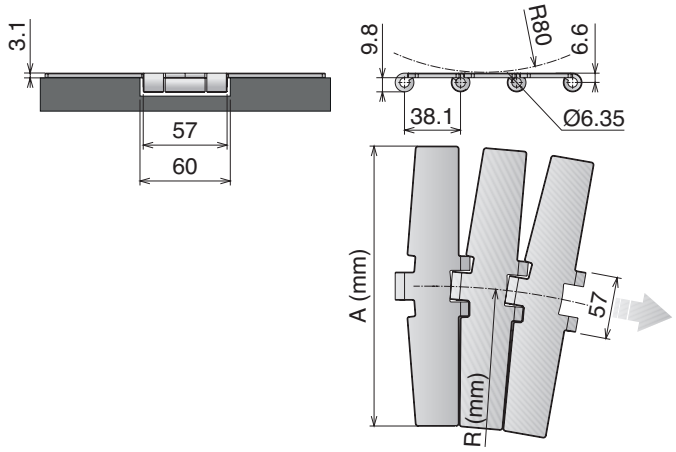

Magnetic System

10 feet 3.048 m
80 links

pg. 87-97/110
pg. 131->136
pg. 525->528

Article-Nr.	Ref.	A (Plate Width) mm	R mm	Weight kg/m	Surface finish µm	Max working load (N)	Plate Thickness mm
SSE *Specially treated Ferritic Stainless Steel (1.4589)* **- Hardened pins**							
10180107	**SSE 8857 M K750**	190,5	750	5,30	0,3	7000	3,1

815 MINI

Catena rettilinea
Straight running chain / Geradegängige Schanierbandkette

Pins: Martensitic 1.4057 | **Backflex radius min.:** 75 mm

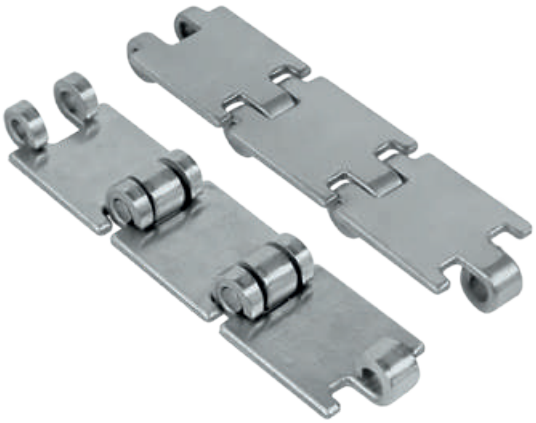

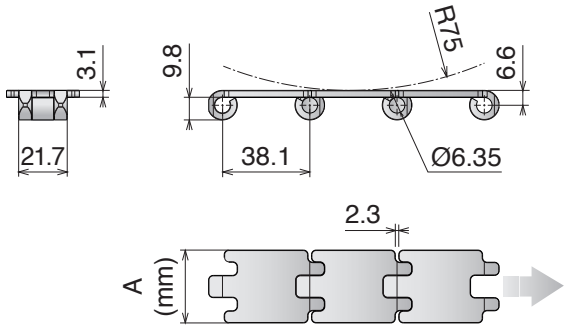

10 feet
3.048 m
80 links

pg. 100

pg. 525->528

Article-Nr.	Ref.	A (Plate Width) mm	Weight kg/m	Max working load (N)	Plate Thickness mm
	SSE *Specially treated Ferritic Stainless Steel (1.4589)* **- Hardened pins**				
10210117	**SSE 815 K125**	31,75	1,07	3000	3,1
10210118	**SSE 815 K175**	44,45	1,35		

812 GT/815 GT

Catena rettilinea
Straight running chain / Geradegängige Schanierbandkette

Pins: Martensitic 1.4057 | **Backflex radius min.:** 120 mm

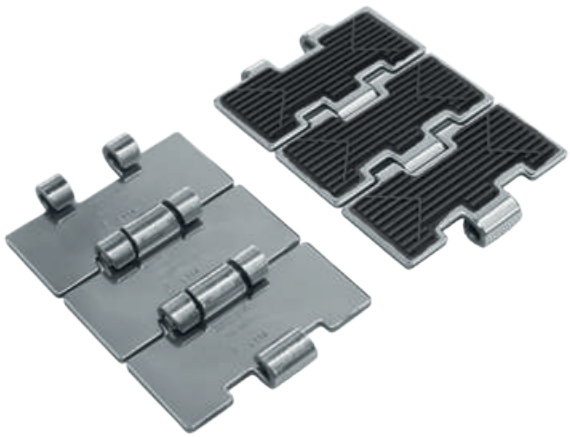

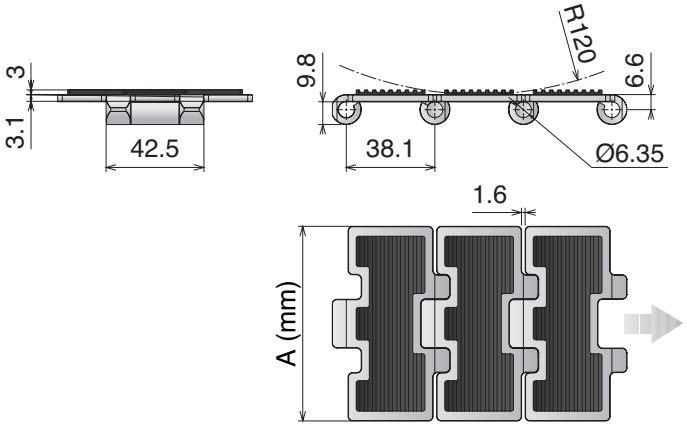

10 feet
3.048 m
80 links

82-83-97/108

pg. 525->528

Article-Nr.	Ref.	A (Plate Width) mm	Weight kg/m	Max working load (N)	Plate/Rubber Thickness mm
		SS *Ferritic Stainless Steel (1.4016)*			
10020202	**SS 812 GT K325**	82,5	2,80	5400	Plate 3,1 Rubber 3
		SSE *Specially treated Ferritic Stainless Steel (1.4589)* **- Hardened pins**			
10020102	**SSE 815 GT K325**	82,5	2,80	6000	Plate 3,1 Rubber 3
10020105	**SSE 815 GT K450**	114,3	3,55		
10020107	**SSE 815 GT K750**	190,5	5,55		

815 TAB GT

Catena rettilinea
Straight running chain / Geradegängige Schanierbandkette

Pins: Martensitic 1.4057 | **Backflex radius min.:** 120 mm

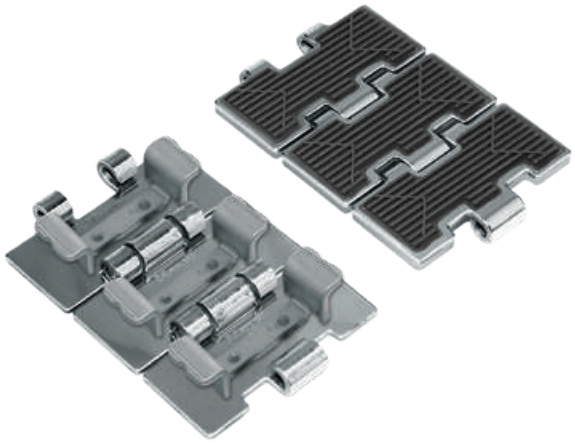

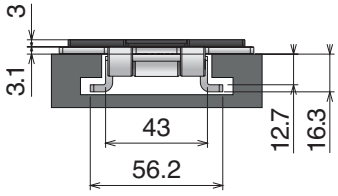

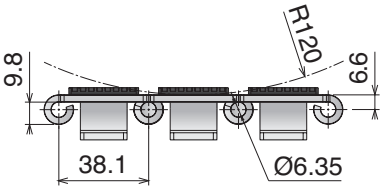

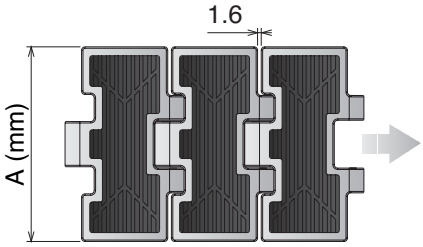

Tab System

10 feet
3.048 m
80 links

82-83-97/108

pg. 525->528

Article-Nr.	Ref.	A (Plate Width) mm	Weight kg/m	Max working load (N)	Plate/Rubber Thickness mm
SSE *Specially treated Ferritic Stainless Steel (1.4589)* **- Hardened pins**					
10200102	**SSE 815 TAB GT K325**	82,5	3,40	6000	Plate 3,1 Rubber 3

802 GT/805 GT

Catena rettilinea
Straight running chain / Geradegängige Schanierbandkette

Pins: Martensitic 1.4057 | **Backflex radius min.:** 130 mm

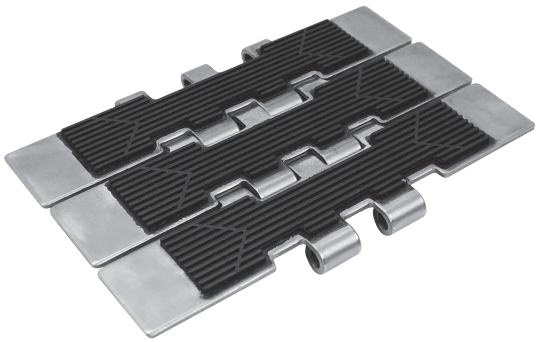

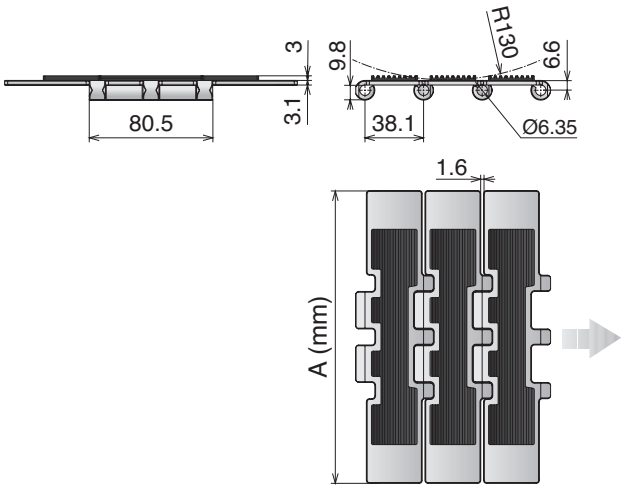

10 feet
3.048 m
80 links

pg. 86-98/109
pg. 525->528

Article-Nr.	Ref.	A (Plate Width) mm	Weight kg/m	Max working load (N)	Plate/Rubber Thickness mm
		SS *Ferritic Stainless Steel (1.4016)*			
10040207	**SS 802 GT K750**	190,5	6,20	7000	Plate 3,1 Rubber 3
		SSE *Specially treated Ferritic Stainless Steel (1.4589)* **- Hardened pins**			
10040107	**SSE 805 GT K750**	190,5	6,20	9000	Plate 3,1 Rubber 3

8157 GT

Catena rettilinea
Straight running chain / Geradegängige Schanierbandkette

Pins: Martensitic 1.4057 | **Backflex radius min.:** 130 mm

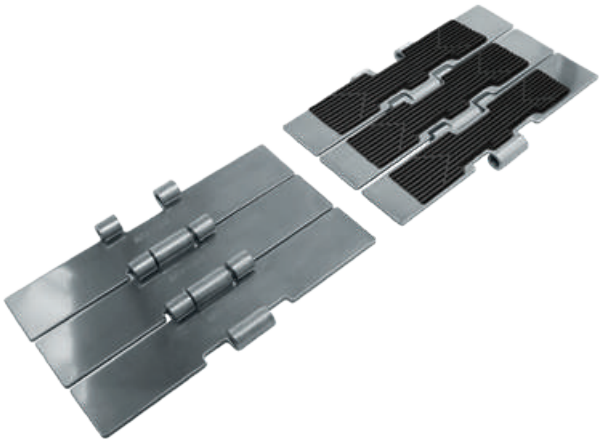

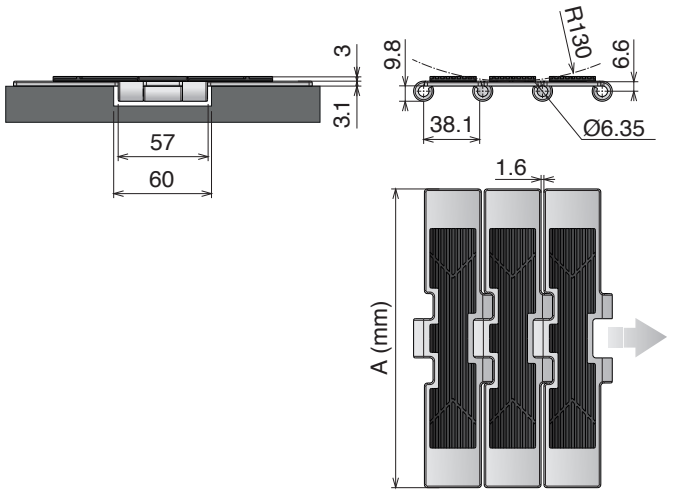

10 feet
3.048 m
80 links

pg. 87-97/110
pg. 525->528

Article-Nr.	Ref.	A (Plate Width) mm	Weight kg/m	Max working load (N)	Plate/Rubber Thickness mm
SSE *Specially treated Ferritic Stainless Steel (1.4589)* **- Hardened pins**					
10060107	**SSE 8157 GT K750**	190,5	6,00	10000	Plate 3,1 Rubber 3

8811 TAB GT

Catena curvilinea
Sideflexing chain / Kurvengängige Scharnierbandkette

Pins: Martensitic 1.4057 | **Backflex radius min.:** 80 mm

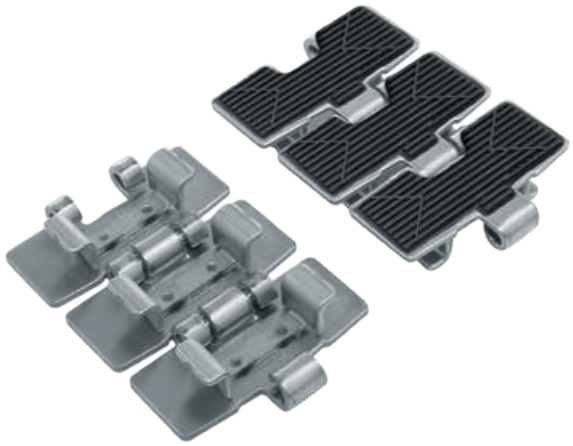

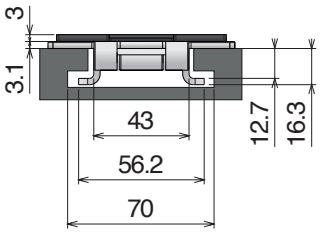

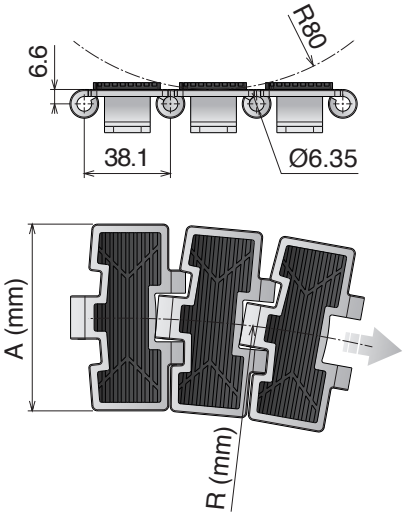

Tab System

10 feet 3.048 m — 80 links | pg. 84-85/110 | pg. 163/169 | pg. 525->528

Article-Nr.	Ref.	A (Plate Width) mm	R mm	Weight kg/m	Max working load (N)	Plate/Rubber Thickness mm
SSE *Specially treated Ferritic Stainless Steel (1.4589)* **- Hardened pins**						
10150102	**SSE 8811 TAB GT K325**	82,5	500	3,20	6000	Plate 3,1 Rubber 3
10150107	**SSE 8811 TAB GT K750**	190,5	610	5,70		

881 M GT

Catena curvilinea
Sideflexing chain / Kurvengängige Scharnierbandkette

Pins: Martensitic 1.4057 | **Backflex radius min.:** 80 mm

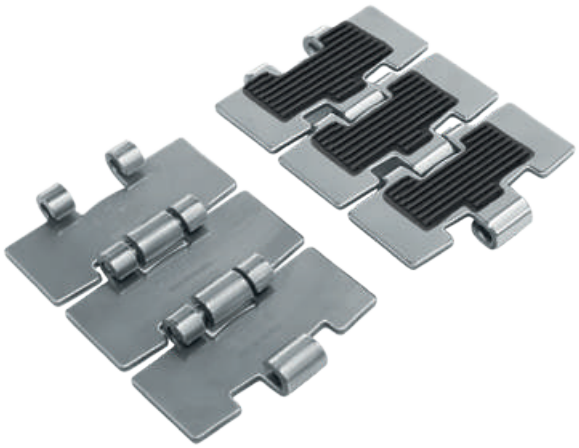

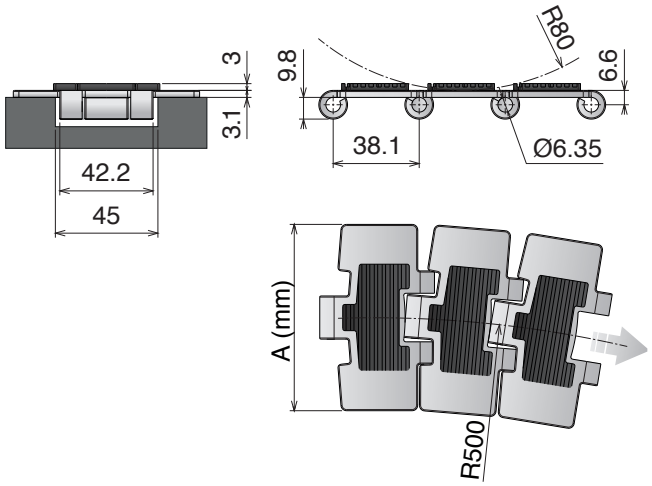

Magnetic System

10 feet 3.048 m
80 links

pg. 84-85/110
pg. 115->130
pg. 525->528

Article-Nr.	Ref.	A (Plate Width) mm	Weight kg/m	Max working load (N)	Plate/Rubber Thickness mm
SSE *Specially treated Ferritic Stainless Steel (1.4589)* - **Hardened pins**					
10090102	**SSE 881 M GT K325**	82,5	2,80	6000	Plate 3,1 Rubber 3
10090107	**SSE 881 M GT K750**	190,5	5,00		

8857 M GT

Catena curvilinea
Sideflexing chain / Kurvengängige Scharnierbandkette

Pins: Martensitic 1.4057 | **Backflex radius min.:** 70 mm

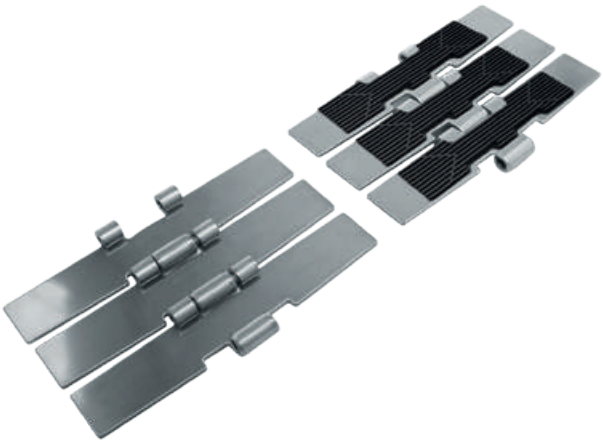

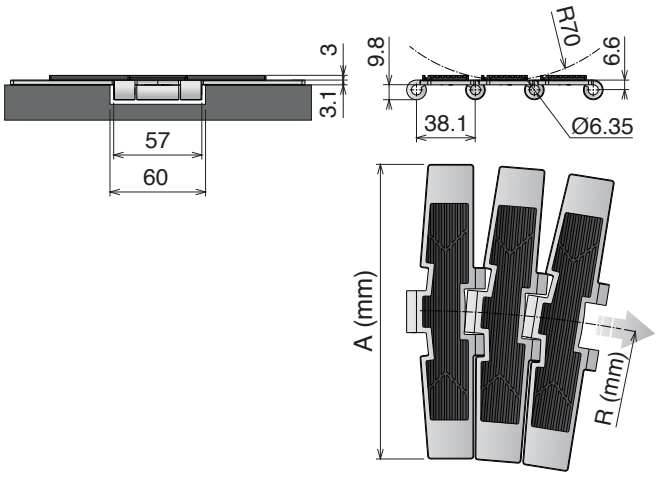

Magnetic System

10 feet 3.048 m
80 links

pg. 87-97/110

pg. 131->136

pg. 525->528

Article-Nr.	Ref.	A (Plate Width) mm	R mm	Weight kg/m	Surface finish µm	Max working load (N)	Plate/Rubber Thickness mm
SSE *Specially treated Ferritic Stainless Steel (1.4589)* **- Hardened pins**							
10190107	**SSE 8857 M GT K750**	190,5	750	5,70	0,3	10000	Plate 3,1 Rubber 3

1874 TAB

Catena curvilinea
Sideflexing chain / Kurvengängige Scharnierbandkette

Backflex radius min.: 260 mm

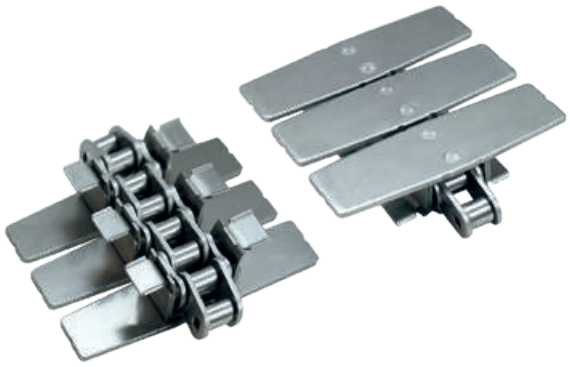

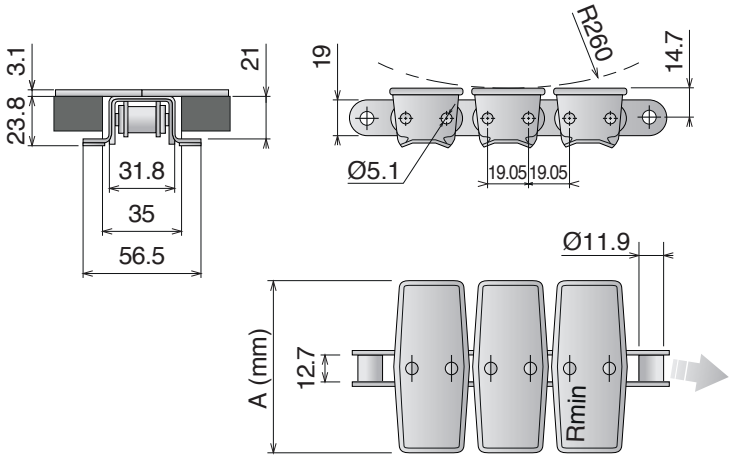

Standard lenght roller chain: 160 Pitches

Tab System

10 feet 3.048 m
80 links

SPROCKET
ASA 60
Standard on market

pg. 165/170
pg. 525->528

Article-Nr.	Ref.	A (Plate Width) mm	R mm	Weight kg/m	Surface finish µm	Max working load (N)	Plate Thickness mm
			Austenitic Stainless Steel				
10220202	**SS 1874 TAB K325**	82,5	381	4,20	0,5	4500	3,1
10220205	**SS 1874 TAB K450**	114,3	381	4,80	0,5		
10220206	**SS 1874 TAB K600**	152,4	457	5,70	0,5		
10220207	**SS 1874 TAB K750**	190,5	610	6,40	0,5		

Movex®

movexii.com

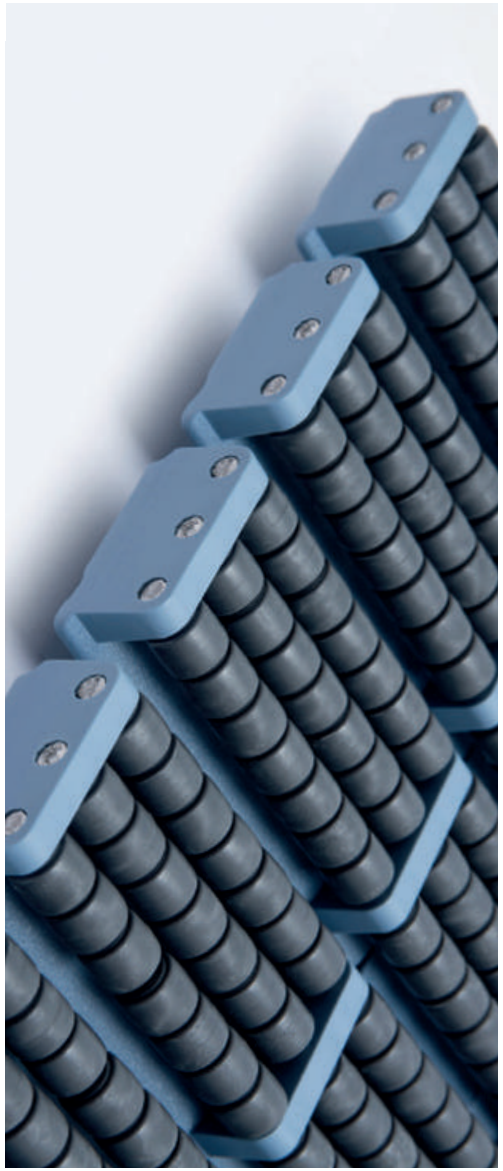





29

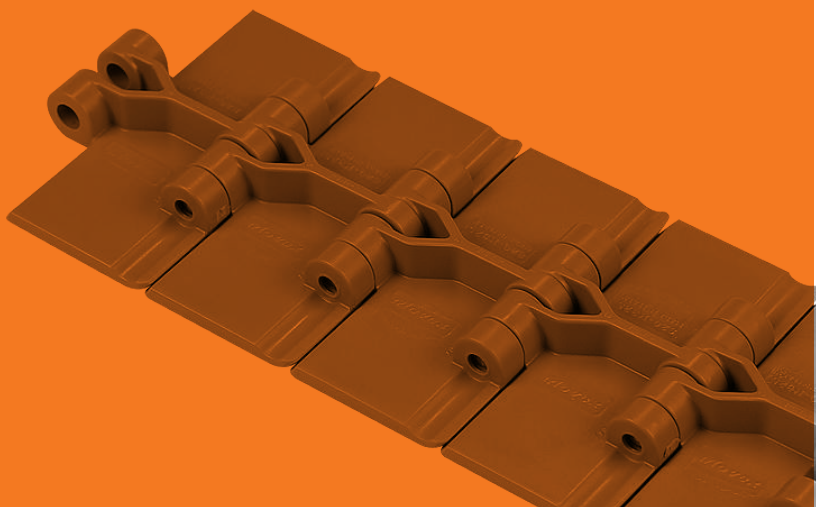

Plastic chains

820  Pag 31-32

820 V  Pag 33

820 Plastic pin  Pag 33

828  Pag 34

831  Pag 35

821  Pag 36

821 GT  Pag 37

821 LBP  Pag 38

8257  Pag 39

8257 GT  Pag 40

8257 LBP  Pag 41

878 TAB  Pag 42

879 M  Pag 43

879 TAB  Pag 44

888 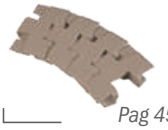 Pag 45

888 GT  Pag 46

880 M  Pag 47

880 TAB  Pag 48

880 V TAB  Pag 49

880 TAB Plastic pin  Pag 49

880 B  Pag 50

880 TAB BO  Pag 51

882 M  Pag 52

882 M GT  Pag 53

882 M LBP 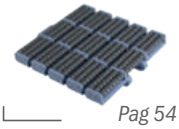 Pag 54

882 TAB  Pag 55

882 TAB GT  Pag 56

882 TAB LBP 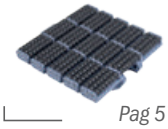 Pag 57

1873  Pag 58

1873 GT  Pag 59

1873 GRIPPER GS1  Pag 60

1873 GRIPPER GS2  Pag 61

1873 GRIPPER GS4  Pag 62

1873 D-SHAPE 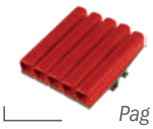 Pag 63

1873 MX1 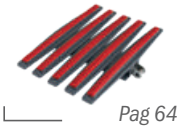 Pag 64

1873 MX2  Pag 65

878 GRIPPER GS1  Pag 66

878 GRIPPER GS2  Pag 66

878 GRIPPER GS4  Pag 66

1843 Pag 67

SP 1883 Pag 68

SP 1883 GT Pag 69

CC 600 Pag 70

CC 600 TAB Pag 70

CC 600 D Pag 71

CC 600 D TAB Pag 71

CC 1400 Pag 72

CC 1400 TAB Pag 72

1701 TAB OP 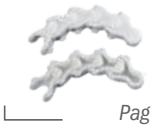 Pag 73

1701 TAB OPF 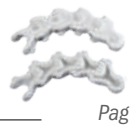 Pag 74

1706  Pag 75

1706 TAB  Pag 75

765 NO GAP 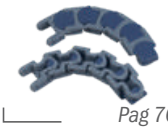 Pag 76

43 MF  Pag 77

63 MF  Pag 77

83 MF 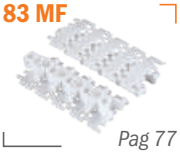 Pag 77

103 MF  Pag 77

83 M  Pag 78

140 M  Pag 78

83 M/PU  Pag 79

PFX

The best choice for dry running applications.

PFX *is a plastic compound developed specific for chain and belts in order to run with limited lubrication or in dry applications where the demands are extreme concerning speed, performance & efficiency.*

PFX *material is developed to reduce the friction between chain and product as well as chain and wearstrips even if no lubrication is used.*

Plastic chains available:

820 FT



828 FT



880 M



880 TAB



Other different types of product in PFX are on request.

Low friction
Developed to reduce friction between chain product and wearstrip.

Minimal dusting
Developed to avoid dusting under extreme circumstances.

Food contact Certified
PFX material is suitable in food application.

High performance
Longer wear life leads to excellent and long enduring product handling features.

Control of cost
Better control of total cost and sustainable conveyor technology.

Patented material
PFX is an exclusive product of Movex.

Energy saving | **Low friction** | **Improved safe condition** | **High visibility** | **High efficiency**

Movex®

820 Catena rettilinea
Straight running chain / Geradegängige Scharnierbandkette

Pins: Stainless Steel | **Backflex radius min.:** 50 mm



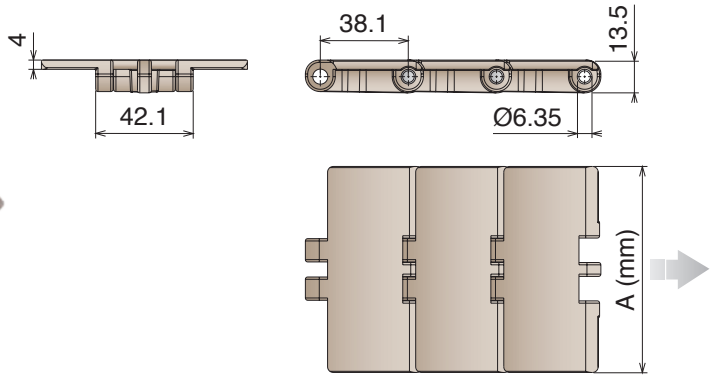

10 feet 3.048 m
80 links

88-89-98/108

pg. 516->524

Article-Nr.	Ref.	A (Plate Width) mm	Weight kg/m	Max working load N	Material
11010102	LF 820 K325	82,5	0,89		
11010103	LF 820 K330	83,8	0,90		
11010104	LF 820 K350	88,9	0,91		
11010114	LF 820 K400	101,6	0,95	1625	LF
11010105	LF 820 K450	114,3	1,00		
11010106	LF 820 K600	152,4	1,22		
11010107	LF 820 K750	190,5	1,43		
11010302	MX 820 K325	82,5	0,89		
11010303	MX 820 K330	83,8	0,90		
11010304	MX 820 K350	88,9	0,91		
11010314	MX 820 K400	101,6	0,95	1260	MX
11010305	MX 820 K450	114,3	1,00		
11010306	MX 820 K600	152,4	1,22		
11010307	MX 820 K750	190,5	1,43		
11013002	PFX 820 K325	82,5	0,89		
11013003	PFX 820 K330	83,8	0,90		
11013004	PFX 820 K350	88,9	0,91		
11013014	PFX 820 K400	101,6	0,95	1260	PFX
11013005	PFX 820 K450	114,3	1,00		
11013006	PFX 820 K600	152,4	1,22		
11013007	PFX 820 K750	190,5	1,43		

820 Catena rettilinea
Straight running chain / Geradegängige Scharnierbandkette

Pins: Stainless Steel | **Backflex radius min.:** 50 mm



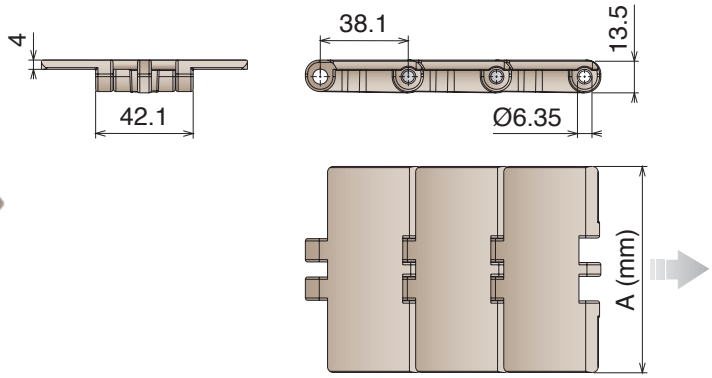

10 feet 3.048 m | 80 links | 88-89-98/108 | pg. 516->524

Article-Nr.	Ref.	A (Plate Width) mm	Weight kg/m	Max working load N	Material
11012502	MPX 820 K325	82,5	0,89		MPX
11012503	MPX 820 K330	83,8	0,90		
11012504	MPX 820 K350	88,9	0,91		
11012514	MPX 820 K400	101,6	0,95	1625	
11012505	MPX 820 K450	114,3	1,00		
11012506	MPX 820 K600	152,4	1,22		
11012507	MPX 820 K750	190,5	1,43		
11011602	DKM 820 K325	82,5	0,89		DKM
11011603	DKM 820 K330	83,8	0,90		
11011604	DKM 820 K350	88,9	0,91		
11011614	DKM 820 K400	101,6	0,95	1625	
11011605	DKM 820 K450	114,3	1,00		
11011606	DKM 820 K600	152,4	1,22		
11011607	DKM 820 K750	190,5	1,43		
11011702	MWX 820 K325	82,5	0,89		MWX
11011703	MWX 820 K330	83,8	0,90		
11011704	MWX 820 K350	88,9	0,91		
11011714	MWX 820 K400	101,6	0,95	1625	
11011705	MWX 820 K450	114,3	1,00		
11011706	MWX 820 K600	152,4	1,22		
11011707	MWX 820 K750	190,5	1,43		

820 V

Catena rettilinea
Straight running chain / Geradegängige Scharnierbandkette

Pins: Stainless Steel | **Backflex radius min.:** 50 mm

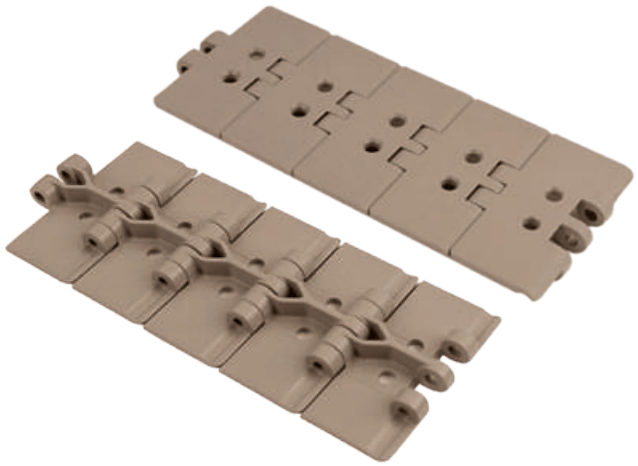

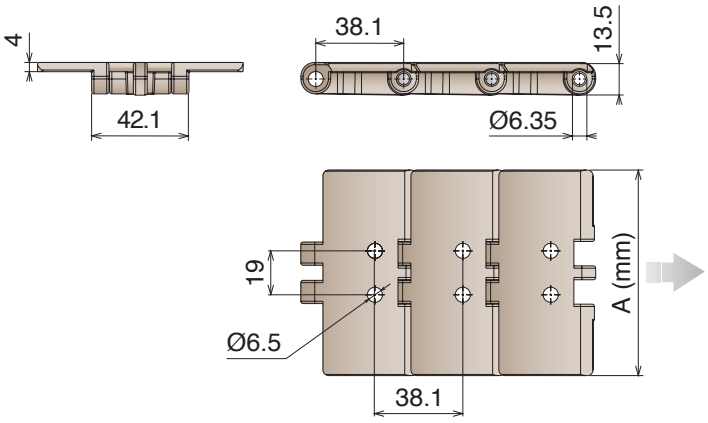

10 feet 3.048 m | 80 links | 88-89-98/108 | pg. 516->524

Article-Nr.	Ref.	A (Plate Width) mm	Weight kg/m	Max working load N	Material
11550102	LF 820 V2 K325	82,5	0,89	1625	LF
11550105	LF 820 V2 K450	114,3	1,00		

820 *Plastic pin*

Catena rettilinea con perno in plastica
Straight running chain with plastic pin / Geradegängige Scharnierbandkette mit plastic bolzen

Pins: Reinforced acetal resin | **Backflex radius min.:** 50 mm



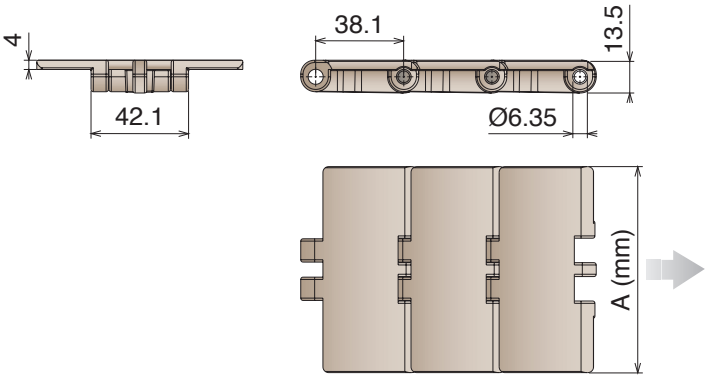

10 feet 3.048 m | 80 links | 88-89-98/108 | pg. 516->524

Article-Nr.	Ref.	A (Plate Width) mm	Weight kg/m	Max working load N	Material
11630102	LF 820 K325	82,5	0,69	650	LF
11630105	LF 820 K450	114,3	0,80		

828 Catena rettilinea
Straight running chain / Geradegängige Scharnierbandkette

Pins: Stainless Steel | **Backflex radius min.:** 50 mm

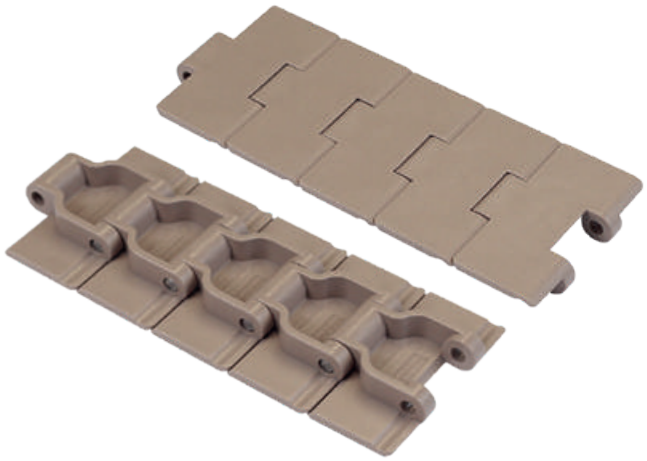

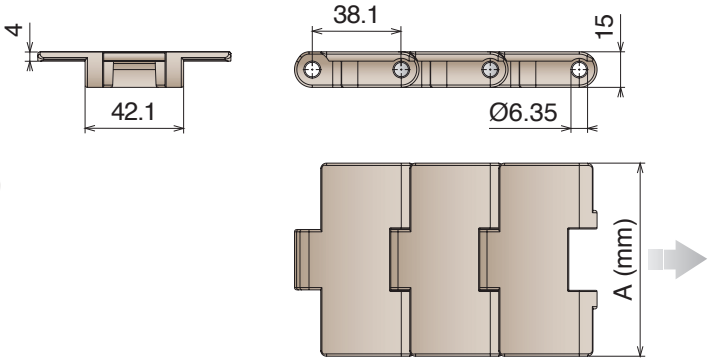

10 feet
3.048 m
80 links

pg. 92-93/108
pg. 516->524

Article-Nr.	Ref.	A (Plate Width) mm	Weight kg/m	Max working load N	Material
11020102	LF 828 K325	82,5	1,07	2320	LF
11020103	LF 828 K330	83,8	1,13		
11020302	MX 828 K325	82,5	1,07	1860	MX
11020303	MX 828 K330	83,8	1,13		
11023002	PFX 828 K325	82,5	1,07	1860	PFX
11023003	PFX 828 K330	83,8	1,13		
11022502	MPX 828 K325	82,5	1,07	2320	MPX
11022503	MPX 828 K330	83,8	1,13		

831 Catena rettilinea
Straight running chain / Geradegängige Scharnierbandkette

Pins: Stainless Steel | **Backflex radius min.:** 50 mm



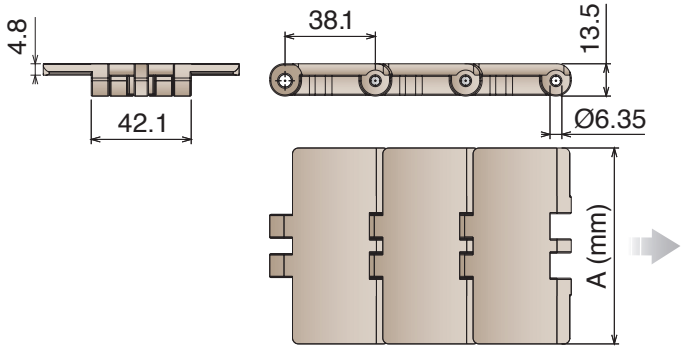

10 feet
3.048 m
80 links

pg. 90-91/108
pg. 516->524

Article-Nr.	Ref.	A (Plate Width) mm	Weight kg/m	Max working load N	Material
11030102	LF 831 K325	82,5	1,00	1625	LF
11030105	LF 831 K450	114,3	1,28		
11030107	LF 831 K750	190,5	1,80		
11030302	MX 831 K325	82,5	1,00	1260	MX
11030305	MX 831 K450	114,3	1,28		
11030307	MX 831 K750	190,5	1,80		

821 Catena rettilinea
Straight running chain / Geradegängige Scharnierbandkette

Pins: Stainless Steel | **Backflex radius min.:** 50 mm



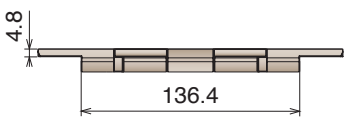

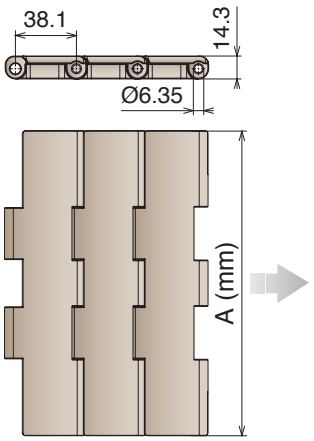

10 feet 3.048 m
80 links

pg. 86/109
pg. 516->524

Article-Nr.	Ref.	A (Plate Width) mm	Weight kg/m	Max working load N	Material
11040107	LF 821 K750	190,5	2,55	2770	LF
11040108	LF 821 K1000	254,0	3,05		
11040109	LF 821 K1200	304,8	3,35		
11040307	MX 821 K750	190,5	2,55	2200	MX
11040308	MX 821 K1000	254,0	3,05		
11040309	MX 821 K1200	304,8	3,35		
11042507	MPX 821 K750	190,5	2,55	2770	MPX
11042508	MPX 821 K1000	254,0	3,05		
11042509	MPX 821 K1200	304,8	3,35		

821 GT

Catena rettilinea
Straight running chain / Geradegängige Scharnierbandkette

Pins: Stainless Steel | **Backflex radius min.:** 50 mm | **TPE Rubber:** 75 ShA



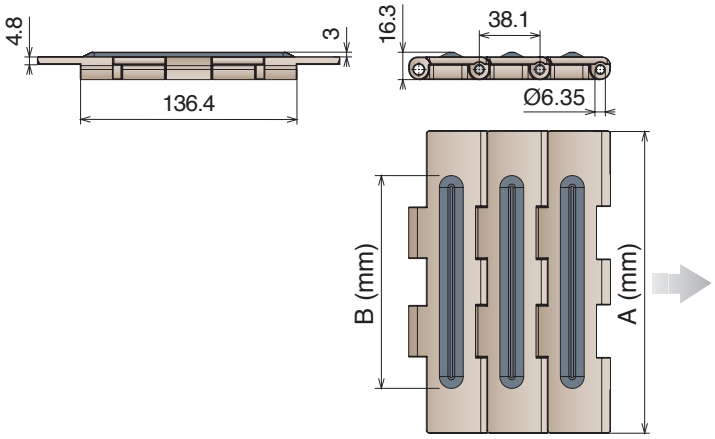

5 feet
1.524 m
40 links

pg. 86/109
pg. 516->524

Article-Nr.	Ref.	A (Plate Width) mm	B (Rubber Width) mm	Weight kg/m	Max working load N	Material
11050107	LF 821 GT K750	190,5	134,0	2,55	2770	LF
11050108	LF 821 GT K1000	254,0	192,0	3,05		
11050109	LF 821 GT K1200	304,8	252,0	3,35		
11050307	MX 821 GT K750	190,5	134,0	2,55	2200	MX
11050308	MX 821 GT K1000	254,0	192,0	3,05		
11050309	MX 821 GT K1200	304,8	252,0	3,35		

821 LBP

Catena rettilinea
Straight running chain / Geradegängige Scharnierbandkette

Pins: Stainless Steel | **Backflex radius min.:** 150 mm

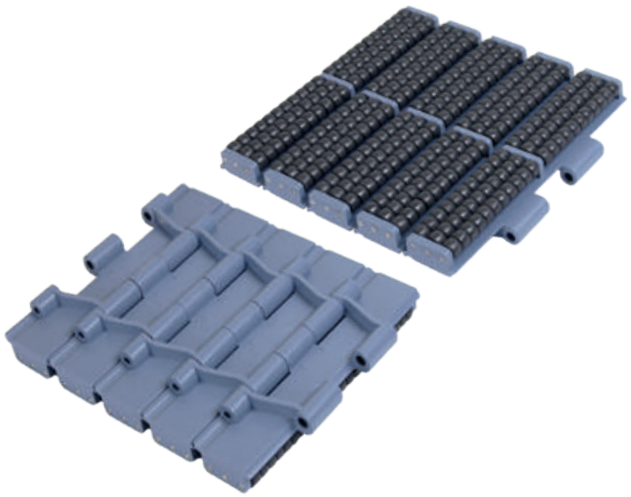

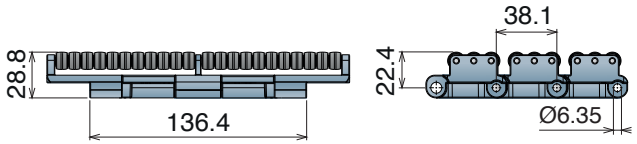

K750

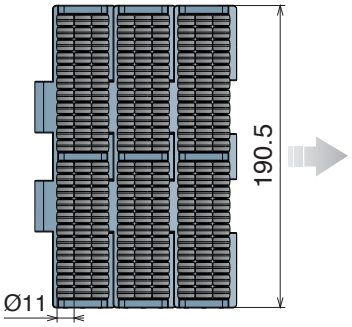

K1000

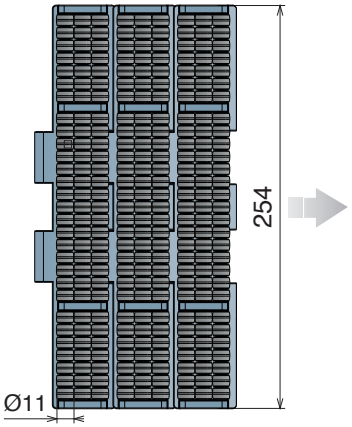

K1200

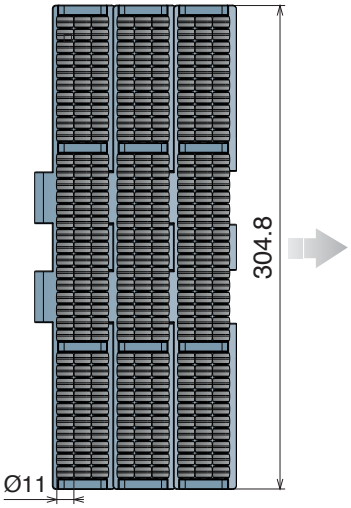

5 feet
1.524 m
40 links

pg. 86/109

pg. 516->524

Article-Nr.	Ref.	Plate Width mm	Weight kg/m	Max working load N	Material
11060107	LFA 821 LBP K750	190,5	5,70	2770	LFA
11060108	LFA 821 LBP K1000	254,0	7,05		
11060109	LFA 821 LBP K1200	304,8	8,21		

8257 Catena rettilinea

Straight running chain / Geradegängige Scharnierbandkette

Pins: Stainless Steel | **Backflex radius min.:** 50 mm



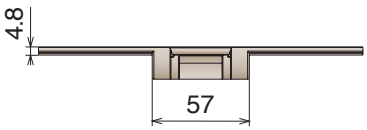

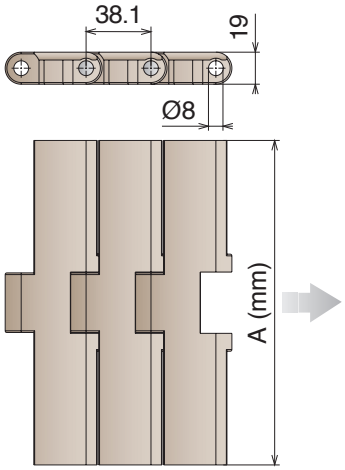

10 feet 3.048 m
80 links

pg. 94-95/110

pg. 516->524

Article-Nr.	Ref.	A (Plate Width) mm	Weight kg/m	Max working load N	Material
11070107	LF 8257 K750	190,5	2,55	3830	LF
11070108	LF 8257 K1000	254,0	3,05		
11070109	LF 8257 K1200	304,8	3,35		
11070307	MX 8257 K750	190,5	2,55	3050	MX
11070308	MX 8257 K1000	254,0	3,05		
11070309	MX 8257 K1200	304,8	3,35		

8257 GT

Catena rettilinea
Straight running chain / Geradegängige Scharnierbandkette

Pins: Stainless Steel | **Backflex radius min.:** 50 mm | **TPE Rubber:** 75 ShA

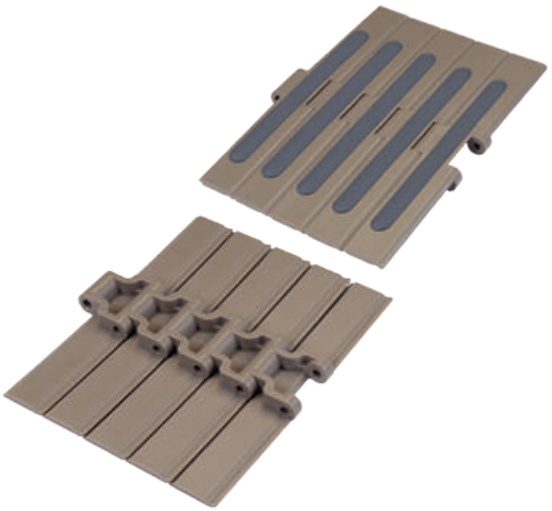

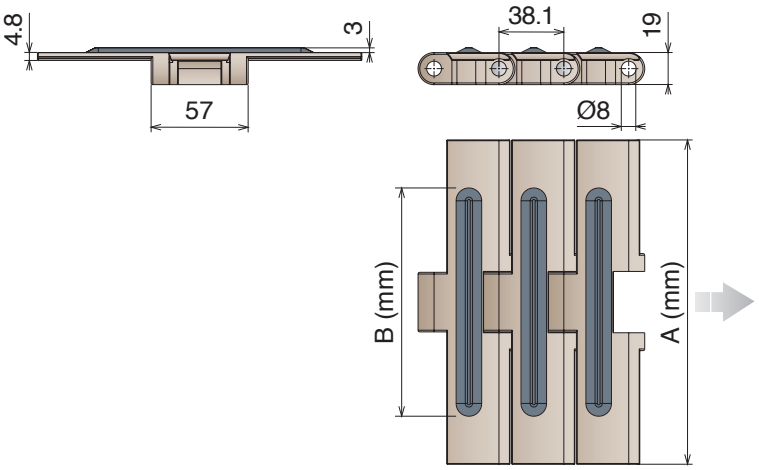

5 feet
1.524 m
40 links

pg. 94-95/110
pg. 516->524

Article-Nr.	Ref.	A (Plate Width) mm	B (Rubber Width) mm	Weight kg/m	Max working load N	Material
11080107	LF 8257 GT K750	190,5	134,0	2,55	3830	LF
11080108	LF 8257 GT K1000	254,0	192,0	2,60		
11080109	LF 8257 GT K1200	304,8	252,0	2,95		

8257 LBP

Catena rettilinea
Straight running chain / Geradegängige Scharnierbandkette

Pins: Stainless Steel | **Backflex radius min.:** 200 mm

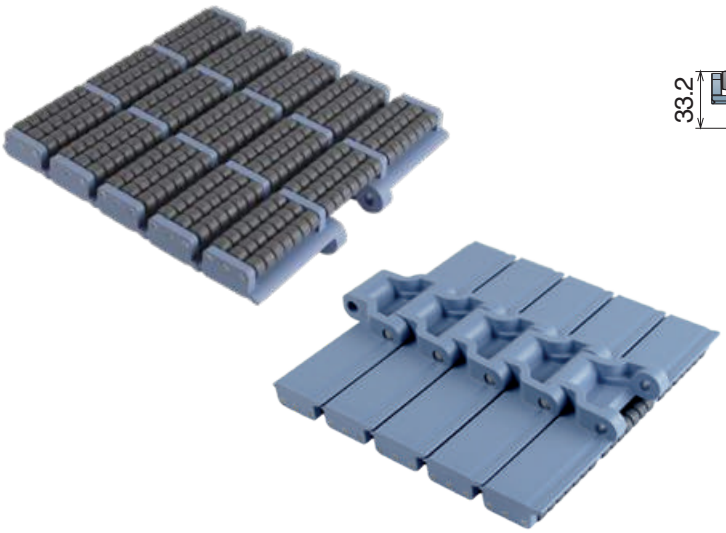

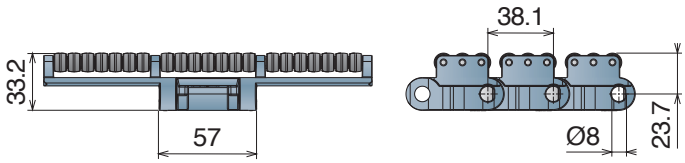

K750

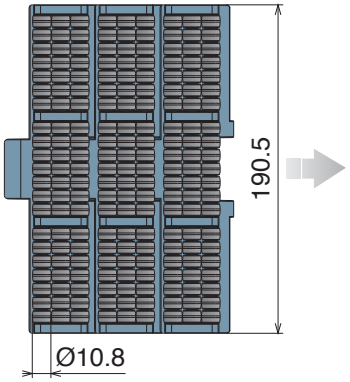

K1000

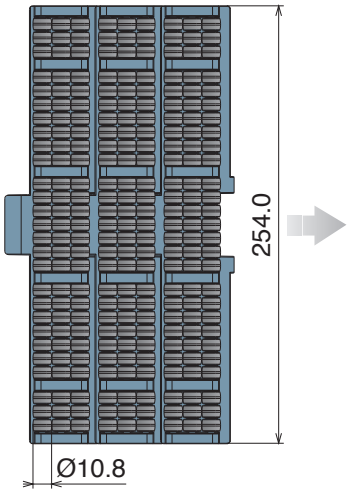

K1200

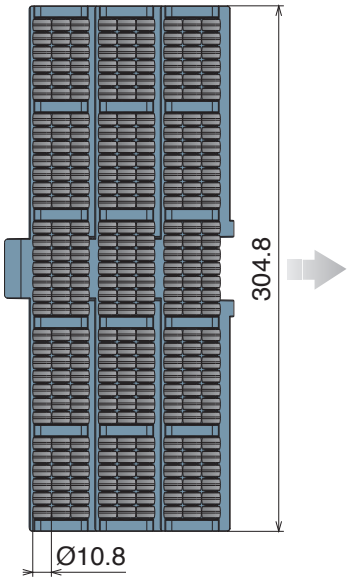

5 feet
1.524 m
40 links

pg. 94-95/110

pg. 516->524

Article-Nr.	Ref.	A (Plate Width) mm	Weight kg/m	Max working load N	Material
11090107	LFA 8257 LBP K750	190,5	5,65	3830	LFA
11090108	LFA 8257 LBP K1000	254,0	7,16		
11090109	LFA 8257 LBP K1200	304,8	8,05		

878 TAB

Catena curvilinea
Sideflexing chain / Kurvengängige Scharnierbandkette

Pins: Stainless Steel | **Backflex radius min.:** 40 mm



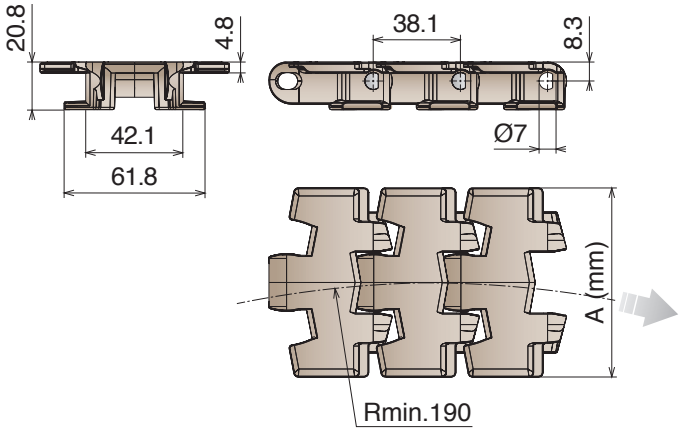

Tab System

10 feet
3.048 m
80 links

pg. 92-93
pg. 163/169
pg. 516->524

Article-Nr.	Ref.	A (Plate Width) mm	Weight kg/m	Max working load N	Material
11190102	LF 878 TAB K325	82,5	1,06	2200	LF
11190105	LF 878 TAB K450	114,3	1,18		
11190302	MX 878 TAB K325	82,5	1,06	1750	MX
11190305	MX 878 TAB K450	114,3	1,18		
11191602	DKM 878 TAB K325	82,5	1,06	2200	DKM
11191605	DKM 878 TAB K450	114,3	1,18		

879 M

Catena curvilinea
Sideflexing chain / Kurvengängige Scharnierbandkette

Pins: Ferritic Stainless Steel | **Backflex radius min.:** 50 mm

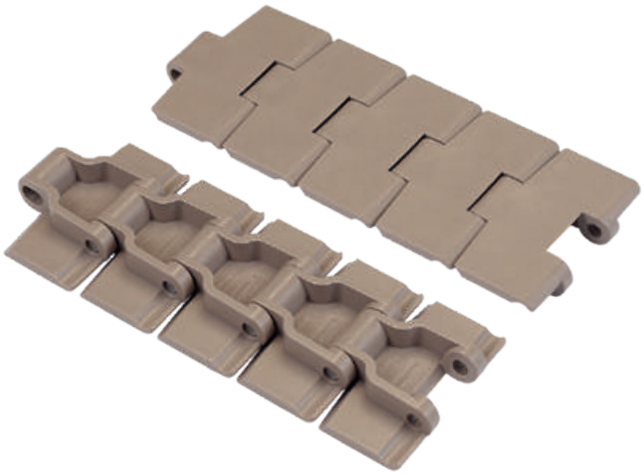

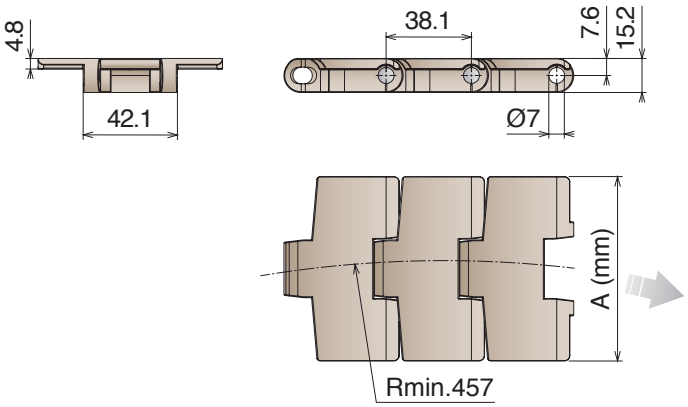

Magnetic System

10 feet 3.048 m
80 links

pg. 92-93/108
pg. 115->128
pg. 516->524

Article-Nr.	Ref.	A (Plate Width) mm	R mm	Weight kg/m	Max working load N	Material
11240102	LF 879 M K325	82,5	457	1,05	2200	LF
11240105	LF 879 M K450	114,3	457	1,15		
11240302	MX 879 M K325	82,5	457	1,05	1750	MX
11240305	MX 879 M K450	114,3	457	1,15		

879 TAB

Catena curvilinea
Sideflexing chain / Kurvengängige Scharnierbandkette

Pins: Stainless Steel | **Backflex radius min.:** 50 mm

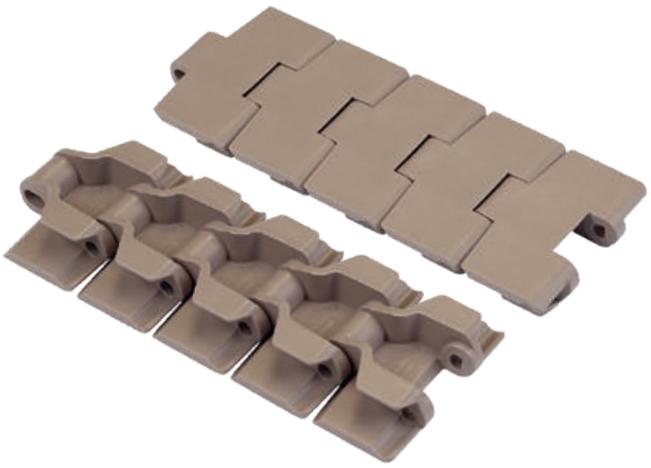

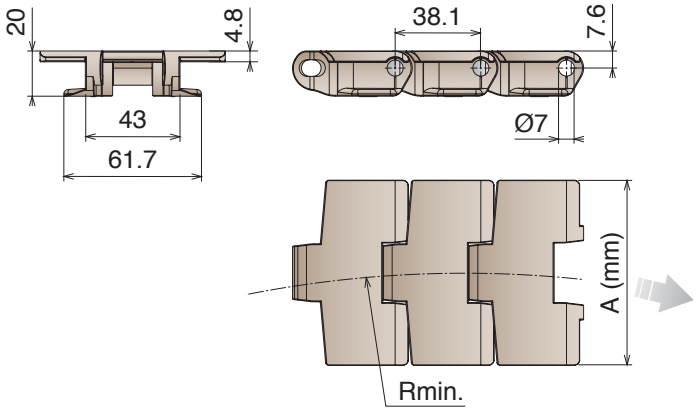

Tab System

10 feet
3.048 m
80 links

pg. 92-93/108
pg. 165/169
pg. 516->524

Article-Nr.	Ref.	A (Plate Width) mm	R mm	Weight kg/m	Max working load N	Material
11250102	LF 879 TAB K325	82,5	457	1,01	2200	LF
11250105	LF 879 TAB K450	114,3	610	1,13		
11250302	MX 879 TAB K325	82,5	457	1,01	1750	MX
11250305	MX 879 TAB K450	114,3	610	1,13		
11252502	MPX 879 TAB K325	82,5	457	1,01	2200	MPX
11252505	MPX 879 TAB K450	114,3	610	1,13		
11251702	MWX 879 TAB K325	82,5	457	1,01	2200	MWX
11251705	MWX 879 TAB K450	114,3	610	1,13		

888 Catena curvilinea
Sideflexing chain / Kurvengängige Scharnierbandkette

Pins: Stainless Steel | **Backflex radius min.:** 40 mm



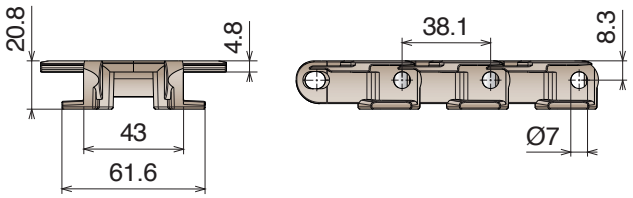

W80

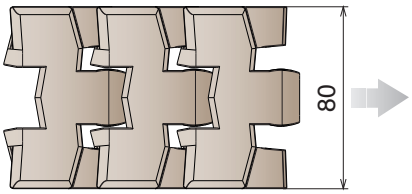

W140

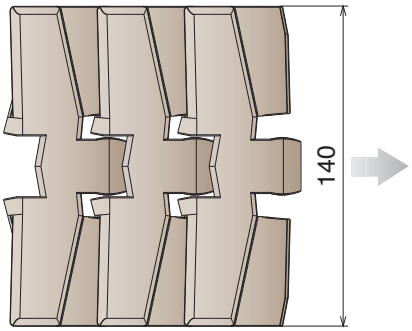

W200

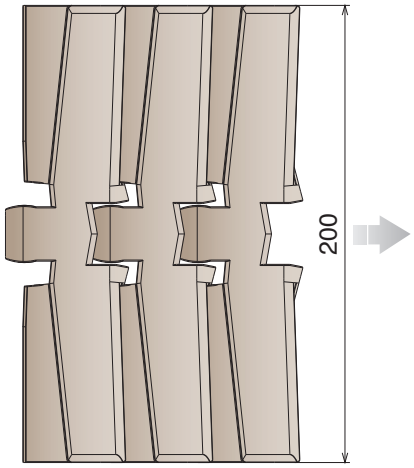

Tab System

10 feet 3.048 m			
80 links	pg. 92-93	pg. 163/169	pg. 516->524

Article-Nr.	Ref.	Plate Width mm	R mm	Weight kg/m	Max working load N	Material
11700119	LF 888 W80	80,0	200	1,05	2200	LF
11700120	LF 888 W140	140,0	500	1,32		
11700121	LF 888 W200	200,0	500	1,62		

888 GT

Catena curvilinea
Sideflexing chain / Kurvengängige Scharnierbandkette

Pins: Stainless Steel | **Backflex radius min.:** 40 mm | **TPE Rubber:** 75 ShA



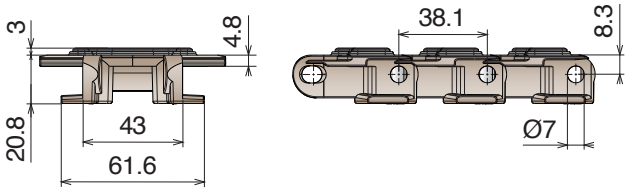

W80

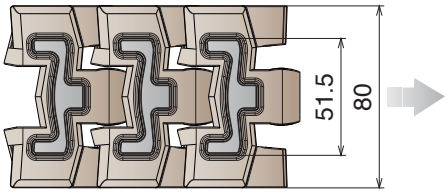

W140

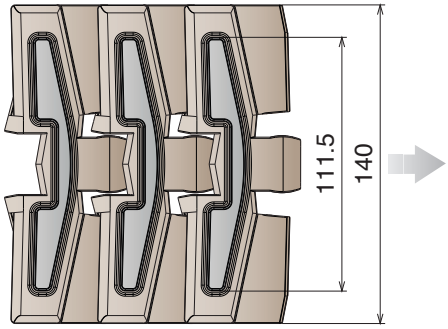

W200

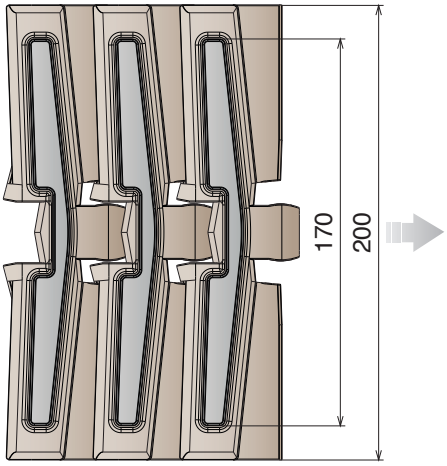

Tab System

10 feet
3.048 m
80 links

pg. 92-93
pg. 163/169
pg. 516->524

Article-Nr.	Ref.	Plate Width mm	R mm	Weight kg/m	Max working load N	Material
11710119	LF 888 GT W80	80,0	200	1,15	2200	LF
11710120	LF 888 GT W140	140,0	500	1,43		
11710121	LF 888 GT W200	200,0	500	1,75		

880 M

Catena curvilinea
Sideflexing chain / Kurvengängige Scharnierbandkette

Pins: Ferritic Stainless Steel | **Backflex radius min.:** 50 mm



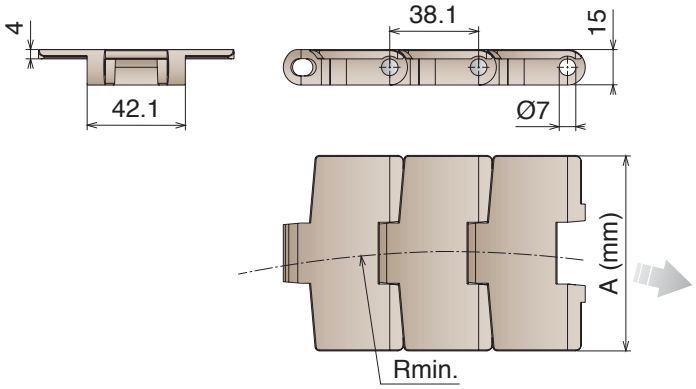

Magnetic System

10 feet
3.048 m
80 links

pg. 92-93/108
pg. 115>130
pg. 516->524

Article-Nr.	Ref.	A (Plate Width) mm	R mm	Weight kg/m	Max working load N	Material
11100102	LF 880 M K325	82,5	457	1,05	2200	LF
11100103	LF 880 M K330	83,8	457	1,09		
11100105	LF 880 M K450	114,3	457	1,15		
11100302	MX 880 M K325	82,5	457	1,05	1750	MX
11100303	MX 880 M K330	83,8	457	1,09		
11100305	MX 880 M K450	114,3	457	1,15		
11103002	PFX 880 M K325	82,5	457	1,05	1750	PFX
11103003	PFX 880 M K330	83,8	457	1,09		
11103005	PFX 880 M K450	114,3	457	1,15		
11102502	MPX 880 M K325	82,5	457	1,05	2200	MPX
11102503	MPX 880 M K330	83,8	457	1,09		
11102505	MPX 880 M K450	114,3	457	1,15		
11101702	MWX 880 M K325	82,5	457	1,05	2200	MWX
11101703	MWX 880 M K330	83,8	457	1,09		
11101705	MWX 880 M K450	114,3	457	1,15		

880 TAB

Catena curvilinea
Sideflexing chain / Kurvengängige Scharnierbandkette

Pins: Stainless Steel | **Backflex radius min.:** 40 mm

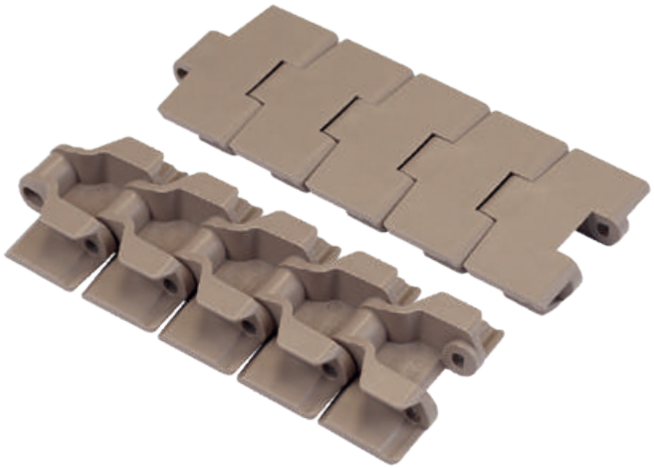

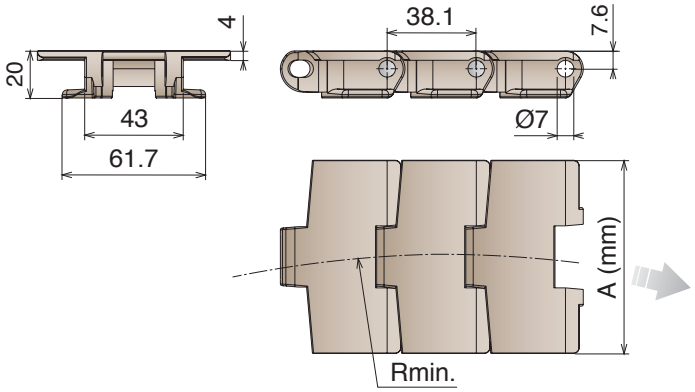

Tab System

10 feet
3.048 m
80 links

pg. 92-93
pg. 163/169
pg. 516->524

Article-Nr.	Ref.	A (Plate Width) mm	R mm	Weight kg/m	Max working load N	Material
11110102	LF 880 TAB K325	82,5	457	1,015	2200	LF
11110103	LF 880 TAB K330	83,8	457	1,018		
11110105	LF 880 TAB K450	114,3	457	1,09		
11110302	MX 880 TAB K325	82,5	457	1,015	1750	MX
11110303	MX 880 TAB K330	83,8	457	1,018		
11110305	MX 880 TAB K450	114,3	457	1,09		
11113002	PFX 880 TAB K325	82,5	457	1,015	1750	PFX
11113003	PFX 880 TAB K330	83,8	457	1,018		
11113005	PFX 880 TAB K450	114,3	457	1,09		
11112502	MPX 880 TAB K325	82,5	457	1,015	2200	MPX
11112503	MPX 880 TAB K330	83,8	457	1,018		
11112505	MPX 880 TAB K450	114,3	457	1,09		
11111602	DKM 880 TAB K325	82,5	457	1,015	2200	DKM
11111603	DKM 880 TAB K330	83,8	457	1,018		
11111605	DKM 880 TAB K450	114,3	457	1,09		
11111702	MWX 880 TAB K325	82,5	457	1,015	2200	MWX
11111703	MWX 880 TAB K330	83,8	457	1,018		
11111705	MWX 880 TAB K450	114,3	457	1,09		

880 V TAB

Catena curvilinea
Sideflexing chain / Kurvengängige Scharnierbandkette

Pins: Stainless Steel | **Backflex radius min.:** 40 mm



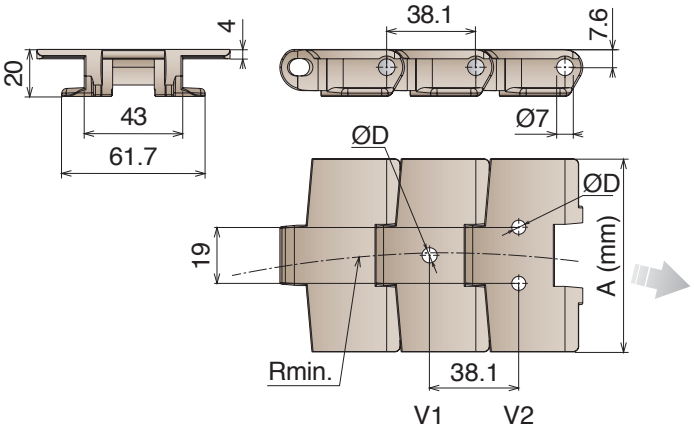

Tab System

10 feet 3.048 m | 80 links | pg. 92-93 | pg. 163/169 | pg. 516->524

Article-Nr.	Ref.	A (Plate Width) mm	R mm	Weight kg/m	D mm	Max working load N	Material
11560102	LF 880 V1 K325	82,5	457	1,015	6,5	2200	LF
11570102	LF 880 V2 K325	82,5	457	1,015			
11570105	LF 880 V2 K450	114,3	457	1,09			

880 TAB *Plastic pin*

Catena curvilinea con perno in plastica
Sideflexing chain with plastic pin / Kurvengängige Scharnierbandkette mit plastic bolzen

Pins: Reinforced acetal resin | **Backflex radius min.:** 40 mm

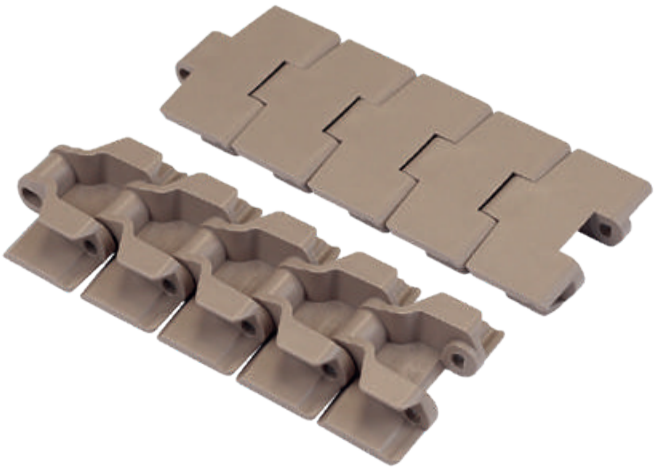

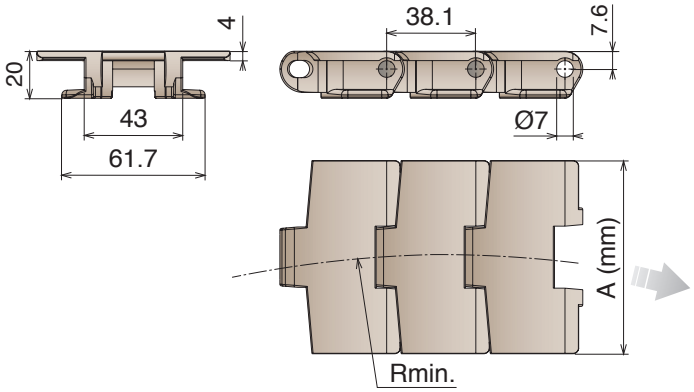

Tab System

10 feet 3.048 m | 80 links | pg. 92-93 | pg. 163/169 | pg. 516->524

Article-Nr.	Ref.	A (Plate Width) mm	R mm	Weight kg/m	Max working load N	Material
11660102	LF 880 TAB K325	82,5	457	0,815	550	LF
11660105	LF 880 TAB K450	114,3	457	0,89		

880 B

Catena curvilinea
Sideflexing chain / Kurvengängige Scharnierbandkette

Pins: Stainless Steel | **Backflex radius min.:** 40 mm



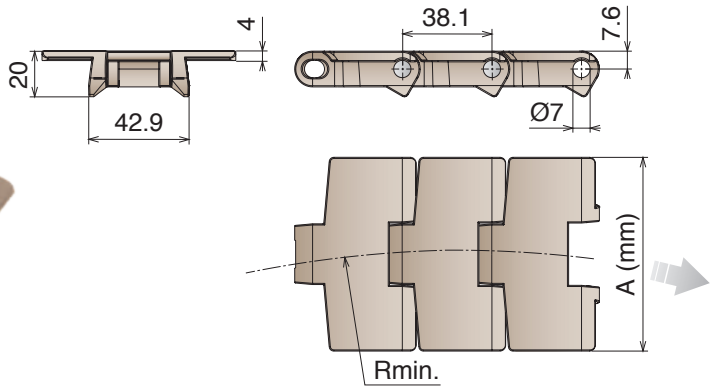

Bevel System

10 feet
3.048 m
80 links

pg. 92-93
pg. 168
pg. 516->524

Article-Nr.	Ref.	A (Plate Width) mm	R mm	Weight kg/m	Max working load N	Material
11120102	LF 880 B K325	82,5	457	0,89	2200	LF
11120104	LF 880 B K350	88,9	457	0,93		
11120105	LF 880 B K450	114,3	457	1,05		
11120302	MX 880 B K325	82,5	457	0,89	1750	MX
11120304	MX 880 B K350	88,9	457	0,93		
11120305	MX 880 B K450	114,3	457	1,05		

880 TAB BO

Catena curvilinea
Sideflexing chain / Kurvengängige Scharnierbandkette

Pins: Stainless Steel | **Backflex radius min.:** 40 mm



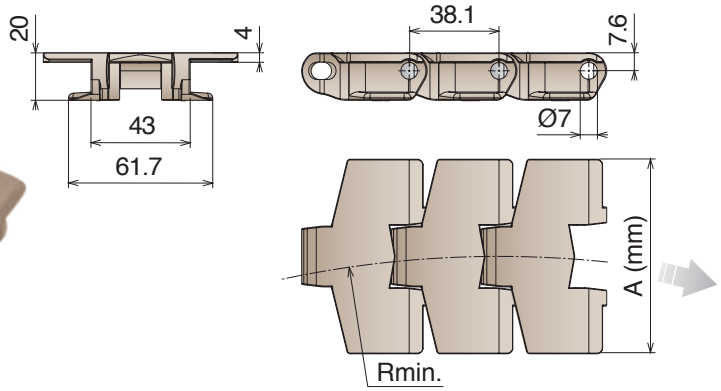

Tab System

10 feet
3.048 m
80 links

pg. 92-93
pg. 163/169
pg. 516->524

Article-Nr.	Ref.	A (Plate Width) mm	R mm	Weight kg/m	Max working load N	Material
11260102	LF 880 TAB BO K325	82,5	190	0,96	1680	LF
11260105	LF 880 TAB BO K450	114,3	190	1,10		
11260302	MX 880 TAB BO K325	82,5	190	0,96	1350	MX
11260305	MX 880 TAB BO K450	114,3	190	1,10		

882 M

Catena curvilinea
Sideflexing chain / Kurvengängige Scharnierbandkette

Pins: Ferritic Stainless Steel | **Backflex radius min.:** 50 mm

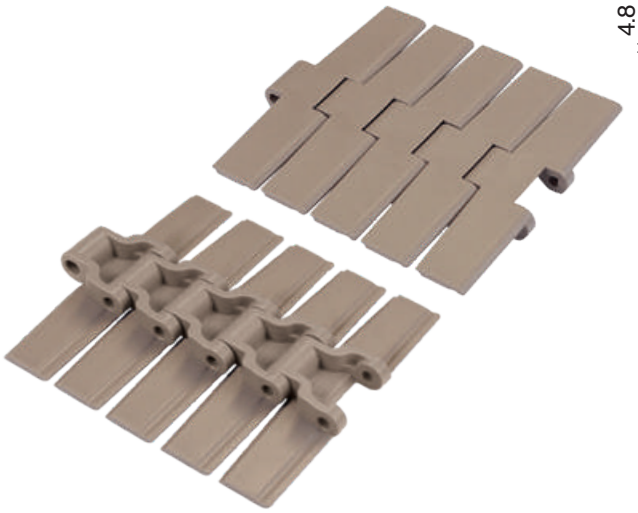

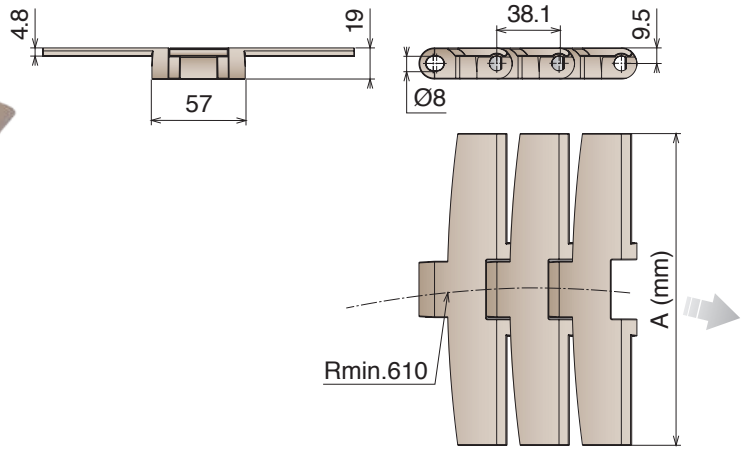

Magnetic System

10 feet
3.048 m
80 links

pg. 94-95/110
pg. 131->136
pg. 516->524

Article-Nr.	Ref.	A (Plate Width) mm	Weight kg/m	Max working load N	Material
11130107	LF 882 M K750	190,5	2,14	3830	LF
11130108	LF 882 M K1000	254,0	2,45		
11130109	LF 882 M K1200	304,8	2,68		
11130307	MX 882 M K750	190,5	2,14	3050	MX
11130308	MX 882 M K1000	254,0	2,45		
11130309	MX 882 M K1200	304,8	2,68		

882 M GT

Catena curvilinea
Sideflexing chain / Kurvengängige Scharnierbandkette

Pins: Ferritic Stainless Steel | **Backflex radius min.:** 50 mm | **TPE Rubber:** 75 ShA

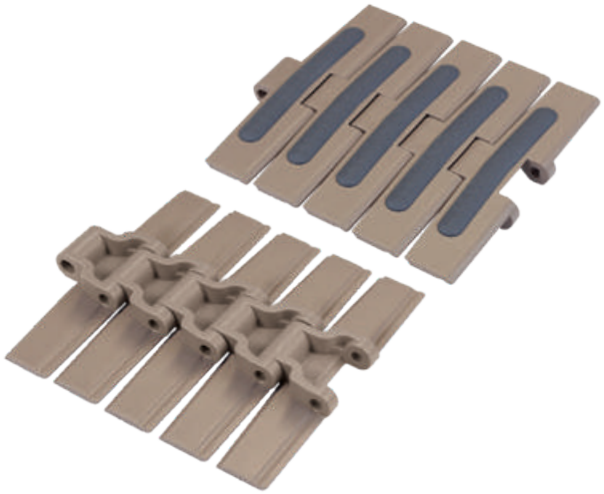

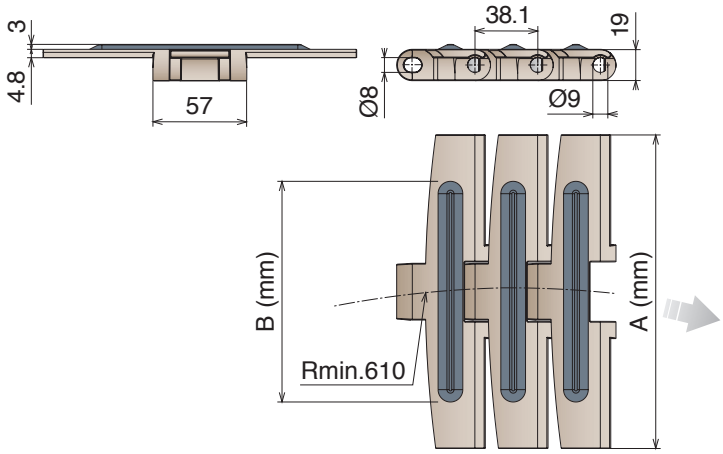

Magnetic System

5 feet
1.524 m
40 links

pg. 94-95/110
pg. 131->136
pg. 516->524

Article-Nr.	Ref.	A (Plate Width) mm	B (Rubber Width) mm	Weight kg/m	Max working load N	Material
11150107	LF 882 M GT K750	190,5	134,0	2,10	3830	LF
11150108	LF 882 M GT K1000	254,0	197,0	2,45		
11150109	LF 882 M GT K1200	304,8	249,0	2,74		

882 M LBP

Catena curvilinea
Sideflexing chain / Kurvengängige Scharnierbandkette

Pins: Ferritic Stainless Steel | **Backflex radius min.:** 150 mm

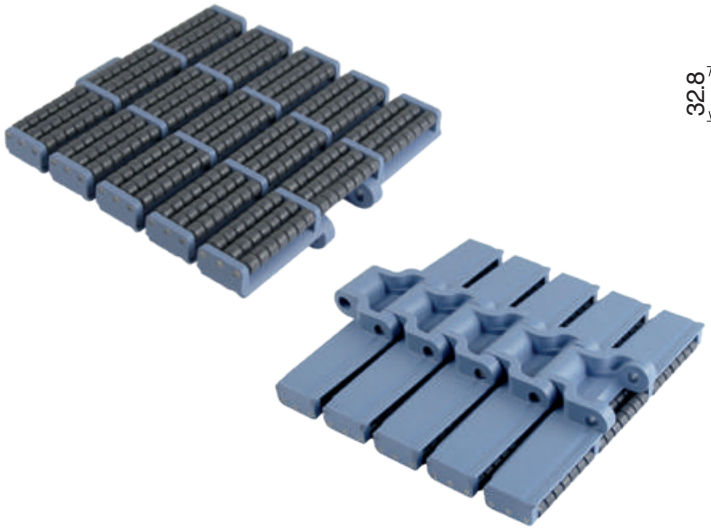

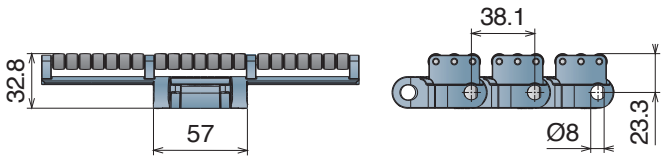

K750

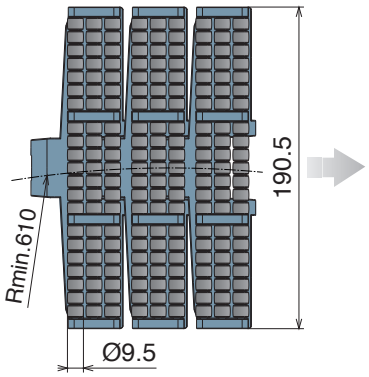

K1000

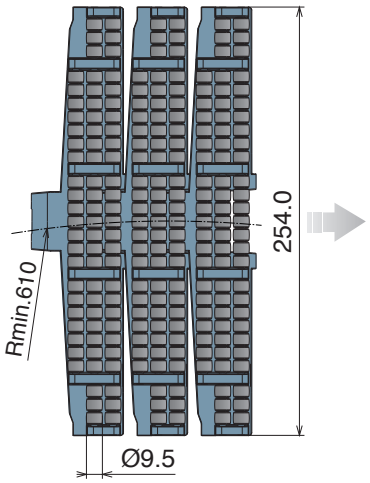

K1200

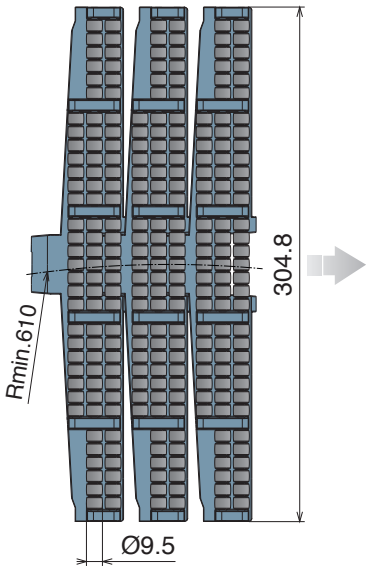

Magnetic System

5 feet
1.524 m
40 links

pg. 94-95/110
pg. 137->140
pg. 516->524

Article-Nr.	Ref.	A (Plate Width) mm	Weight kg/m	Max working load N	Material
11170107	LFA 882 M LBP K750	190,5	3,92	3830	LFA
11170108	LFA 882 M LBP K1000	254,0	4,94		
11170109	LFA 882 M LBP K1200	304,8	5,82		

882 TAB

Catena curvilinea
Sideflexing chain / Kurvengängige Scharnierbandkette

Pins: Stainless Steel | **Backflex radius min.:** 40 mm



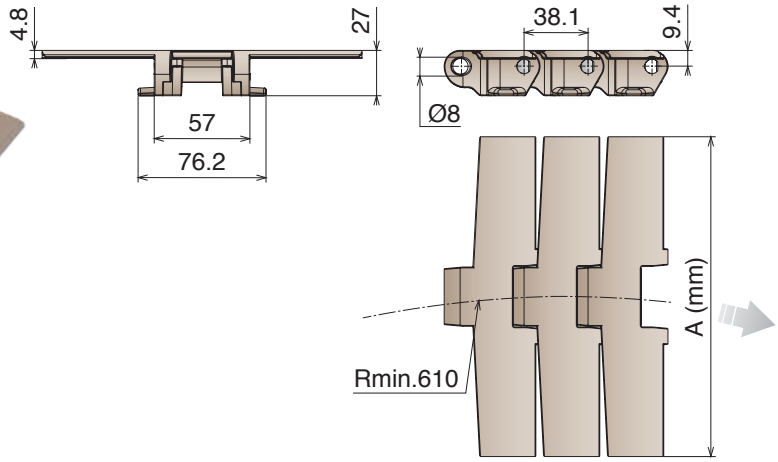

Tab System

10 feet 3.048 m | 80 links | pg. 94-95/110 | pg. 164/169 | pg. 516->524

Article-Nr.	Ref.	A (Plate Width) mm	Weight kg/m	Max working load N	Material
11140105	LF 882 TAB K450	114,3	2,05	3830	LF
11140106	LF 882 TAB K600	152,4	2,20		
11140107	LF 882 TAB K750	190,5	2,45		
11140108	LF 882 TAB K1000	254,0	2,85		
11140109	LF 882 TAB K1200	304,8	3,40		
11140305	MX 882 TAB K450	114,3	2,05	3050	MX
11140306	MX 882 TAB K600	152,4	2,20		
11140307	MX 882 TAB K750	190,5	2,45		
11140308	MX 882 TAB K1000	254,0	2,85		
11140309	MX 882 TAB K1200	304,8	3,40		
11142505	MPX 882 TAB K450	114,3	2,05	3830	MPX
11142506	MPX 882 TAB K600	152,4	2,20		
11142507	MPX 882 TAB K750	190,5	2,45		
11142508	MPX 882 TAB K1000	254,0	2,85		
11142509	MPX 882 TAB K1200	304,8	3,40		
11141705	MWX 882 TAB K450	114,3	2,05	3830	MWX
11141706	MWX 882 TAB K600	152,4	2,20		
11141707	MWX 882 TAB K750	190,5	2,45		
11141708	MWX 882 TAB K1000	254,0	2,85		
11141709	MWX 882 TAB K1200	304,8	3,40		

882 TAB GT

Catena curvilinea
Sideflexing chain / Kurvengängige Scharnierbandkette

Pins: Stainless Steel | **Backflex radius min.:** 40 mm | **TPE Rubber:** 75 ShA



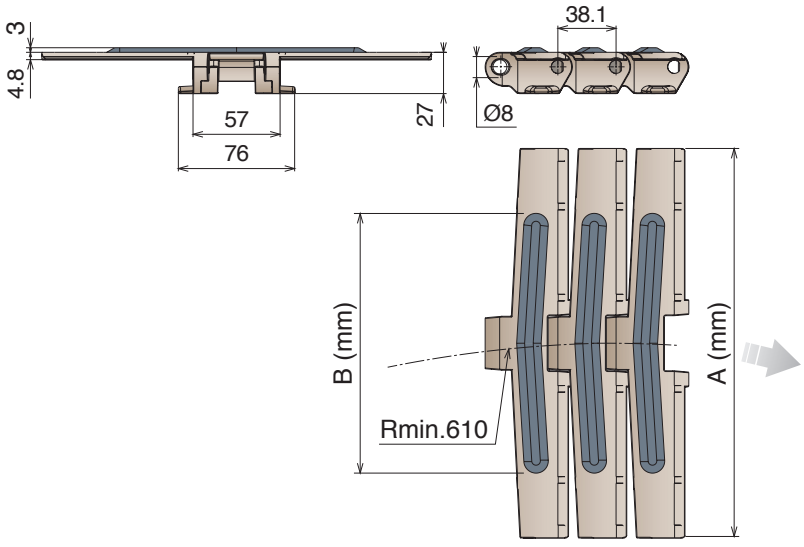

Tab System

5 feet
1.524 m
40 links

pg. 94-95/110
pg. 164/169
pg. 516->524

Article-Nr.	Ref.	A (Plate Width) mm	B (Rubber Width) mm	Weight kg/m	Max working load N	Material
11160107	LF 882 TAB GT K750	190,5	134,0	2,37	3830	LF
11160108	LF 882 TAB GT K1000	254,0	197,0	2,67		
11160109	LF 882 TAB GT K1200	304,8	249,0	2,92		
11160307	MX 882 TAB GT K750	190,5	134,0	2,37	3050	MX
11160308	MX 882 TAB GT K1000	254,0	197,0	2,67		
11160309	MX 882 TAB GT K1200	304,8	249,0	2,92		

882 TAB LBP

Catena curvilinea
Sideflexing chain / Kurvengängige Scharnierbandkette

Pins: Stainless Steel | **Backflex radius min.:** 150 mm

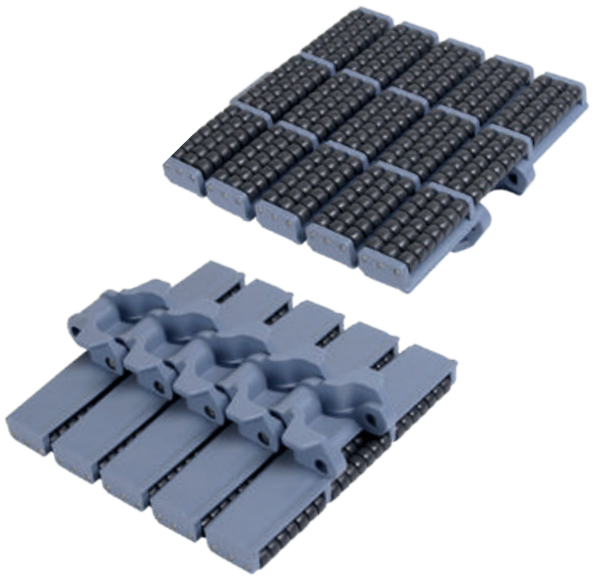

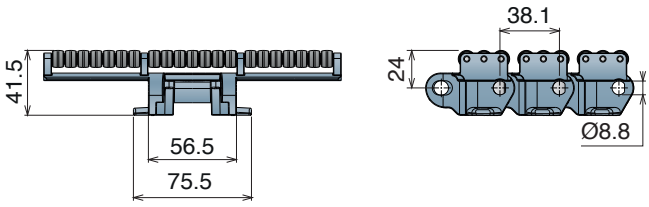

K450

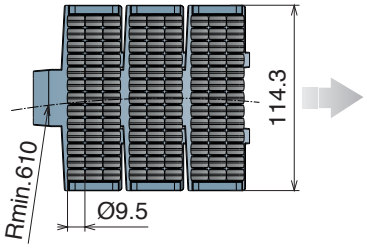

K750

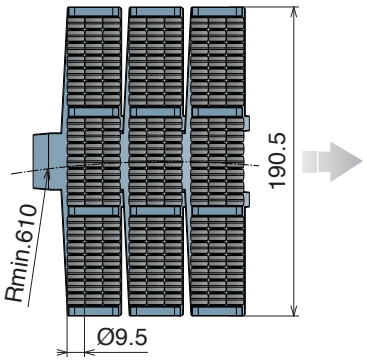

K1000

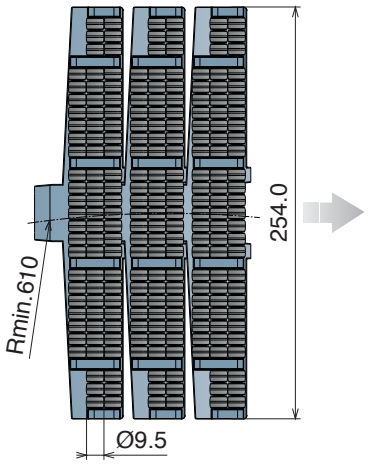

K1200

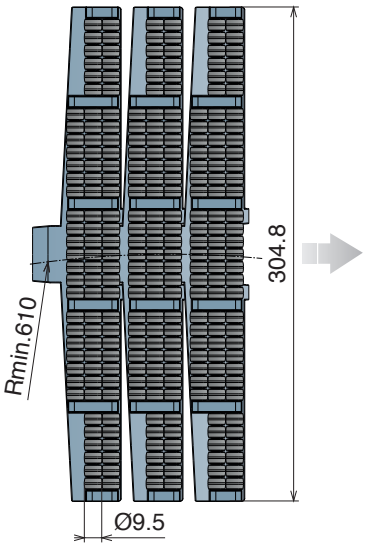

Tab System

5 feet 1.524 m			
40 links	pg. 94-95/110	pg. 164/169	pg. 516->524

Article-Nr.	Ref.	Plate Width mm	Weight kg/m	Max working load N	Material
11180105	LFA 882 TAB LBP K450	114,3	4,00	3830	LFA
11180107	LFA 882 TAB LBP K750	190,5	4,70		
11180108	LFA 882 TAB LBP K1000	254,0	5,95		
11180109	LFA 882 TAB LBP K1200	304,8	6,55		

1873 Catena curvilinea
Sideflexing chain / Kurvengängige Scharnierbandkette

The stainless steel version is supplied with LONG-LIFE SS roller chain.



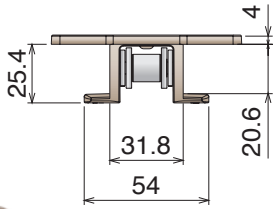

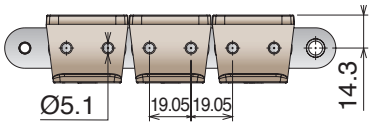

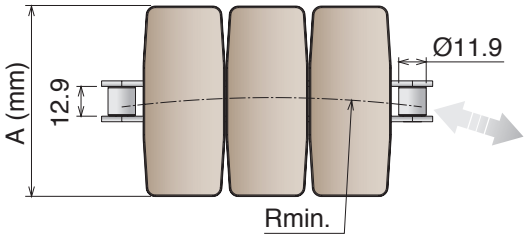

Standard lenght roller chain: 160 Pitches

Tab System

10 feet
3.048 m
80 flights

SPROCKET
ASA 60
Standard on market

pg. 165/170
pg. 516->524

Article-Nr.	Chain	Ref.	A (Plate Width) mm	R mm	Weight kg/m	Max working load N	Backflex radius min. mm	Material
11590102	C45	**LF 1873 TAB K325**	82,5	355	2,10	4500	180	**LF**
11600102	Stainless Steel		82,5	355	2,10	3500		
11590105	C45	**LF 1873 TAB K450**	114,3	355	2,30	4500		
11600105	Stainless Steel		114,3	355	2,30	3500		
11590106	C45	**LF 1873 TAB K600**	152,4	457	2,40	4500		
11600106	Stainless Steel		152,4	457	2,40	3500		
11590107	C45	**LF 1873 TAB K750**	190,5	457	2,60	4500		
11600107	Stainless Steel		190,5	457	2,60	3500		
11590108	C45	**LF 1873 TAB K1000**	254,0	457	2,80	4500		
11600108	Stainless Steel		254,0	457	2,80	3500		
11590109	C45	**LF 1873 TAB K1200**	304,8	457	3,00	4500		
11600109	Stainless Steel		304,8	457	3,00	3500		
11590302	C45	**MX 1873 TAB K325**	82,5	355	2,10	4500	180	**MX**
11600302	Stainless Steel		82,5	355	2,10	3500		
11590305	C45	**MX 1873 TAB K450**	114,3	355	2,30	4500		
11600305	Stainless Steel		114,3	355	2,30	3500		
11590306	C45	**MX 1873 TAB K600**	152,4	457	2,40	4500		
11600306	Stainless Steel		152,4	457	2,40	3500		
11590307	C45	**MX 1873 TAB K750**	190,5	457	2,60	4500		
11600307	Stainless Steel		190,5	457	2,60	3500		
11590308	C45	**MX 1873 TAB K1000**	254,0	457	2,80	4500		
11600308	Stainless Steel		254,0	457	2,80	3500		
11590309	C45	**MX 1873 TAB K1200**	304,8	457	3,00	4500		
11600309	Stainless Steel		304,8	457	3,00	3500		

1873 GT

Catena curvilinea
Sideflexing chain / Kurvengängige Scharnierbandkette

The stainless steel version is supplied with LONG-LIFE SS roller chain. **TPE Rubber:** 75 ShA



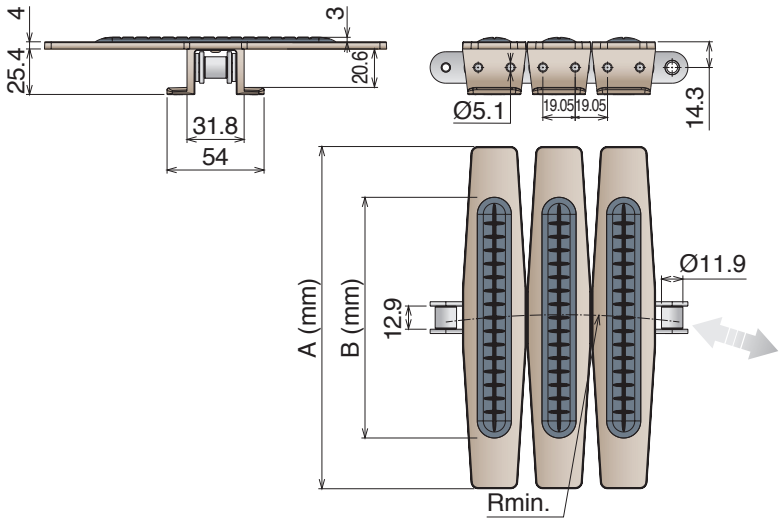

Standard lenght roller chain: 160 Pitches

Tab System

10 feet 3.048 m
80 flights

SPROCKET
ASA 60
Standard on market

pg. 165/170
pg. 516->524

Article-Nr.	Chain	Ref.	A (Plate Width) mm	B (Rubber Width) mm	Weight kg/m	Max working load N	Sideflex radius min. mm	Material
11610107	C45	**LF 1873 GT TAB K750**	190,5	134,0	2,60	4500	457	LF
11620107	Stainless Steel		190,5	134,0	2,60	3500		
11610108	C45	**LF 1873 GT TAB K1000**	254,0	192,0	2,80	4500		
11620108	Stainless Steel		254,0	192,0	2,80	3500		
11610109	C45	**LF 1873 GT TAB K1200**	304,8	252,0	3,00	4500	457	
11620109	Stainless Steel		304,8	252,0	3,00	3500		

1873 GRIPPER GS1

Catena curvilinea
Sideflexing chain / Kurvengängige Scharnierbandkette

The stainless steel version is supplied with LONG-LIFE SS roller chain.

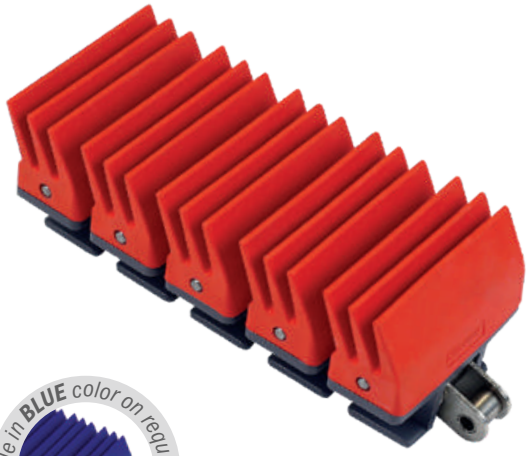



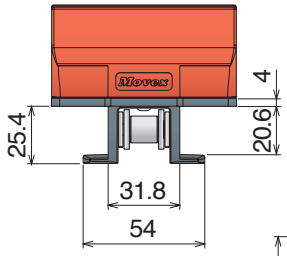

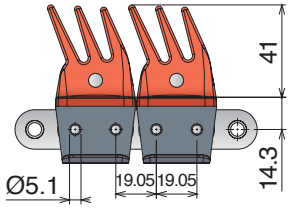

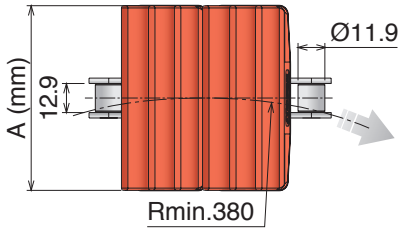

Standard lenght roller chain: 160 Pitches

Tab System

10 feet
3.048 m
80 flights

SPROCKET
ASA 60
Standard on market

pg. 165/170

pg. 516->524

Article-Nr.	Chain	Ref.	A (Width) mm	Max working load N	Weight kg/m	Rubber	Material
11200102	C45	**1873 TAB K325 GR**	82,5	4500	4,354	Material: TPR Color: Red	**LFD**
11200105		**1873 TAB K450 GR**	114,3				
11200202	Nickel Plated Steel	**1873 NP TAB K325 GR**	82,5	4500			
11200205		**1873 NP TAB K450 GR**	114,3				
11200302	Stainless Steel	**1873 SS TAB K325 GR**	82,5	3500			
11200305		**1873 SS TAB K450 GR**	114,3				
11320102	C45	**1873 TAB K325 GR**	82,5	4500	4,354	Material: TPR Color: Red	**MX**
11320105		**1873 TAB K450 GR**	114,3				
11320202	Nickel Plated Steel	**1873 NP TAB K325 GR**	82,5	4500			
11320205		**1873 NP TAB K450 GR**	114,3				
11320302	Stainless Steel	**1873 SS TAB K325 GR**	82,5	3500			
11320305		**1873 SS TAB K450 GR**	114,3				
11210102	C45	**1873 TAB K325 GR**	82,5	4500	4,354	Material: EPDM-PP Color: Black	**PP**
11210105		**1873 TAB K450 GR**	114,3				
11210202	Nickel Plated Steel	**1873 NP TAB K325 GR**	82,5	4500			
11210205		**1873 NP TAB K450 GR**	114,3				
11210302	Stainless Steel	**1873 SS TAB K325 GR**	82,5	3500			
11210305		**1873 SS TAB K450 GR**	114,3				
11330102	C45	**1873 TAB K325 GR**	82,5	4500	4,354	Material: TPR Color: Red	**MWX**
11330105		**1873 TAB K450 GR**	114,3				
11330202	Nickel Plated Steel	**1873 NP TAB K325 GR**	82,5	4500			
11330205		**1873 NP TAB K450 GR**	114,3				
11330302	Stainless Steel	**1873 SS TAB K325 GR**	82,5	3500			
11330305		**1873 SS TAB K450 GR**	114,3				

1873 GRIPPER GS2

Catena curvilinea
Sideflexing chain / Kurvengängige Scharnierbandkette

The stainless steel version is supplied with LONG-LIFE SS roller chain.





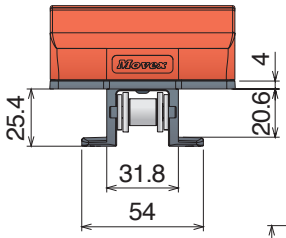

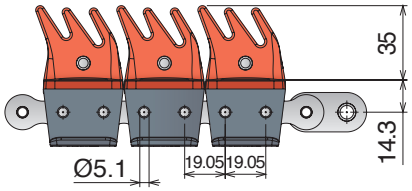

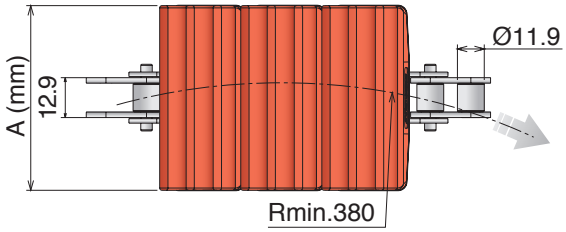

Standard lenght roller chain: 160 Pitches

Tab System

10 feet
3.048 m
80 flights

SPROCKET
ASA 60
Standard on market

pg. 165/170
pg. 516->524

Article-Nr.	Chain	Ref.	A (Width) mm	Max working load N	Weight kg/m	Rubber	Material
11280102	C45	1873 TAB K325 GR	82,5	4500	4,354	Material: TPR Color: Red	LFD
11280105		1873 TAB K450 GR	114,3				
11280202	Nickel Plated Steel	1873 NP TAB K325 GR	82,5	4500			
11280205		1873 NP TAB K450 GR	114,3				
11280302	Stainless Steel	1873 SS TAB K325 GR	82,5	3500			
11280305		1873 SS TAB K450 GR	114,3				
11340102	C45	1873 TAB K325 GR	82,5	4500	4,354	Material: TPR Color: Red	MX
11340105		1873 TAB K450 GR	114,3				
11340202	Nickel Plated Steel	1873 NP TAB K325 GR	82,5	4500			
11340205		1873 NP TAB K450 GR	114,3				
11340302	Stainless Steel	1873 SS TAB K325 GR	82,5	3500			
11340305		1873 SS TAB K450 GR	114,3				
11290102	C45	1873 TAB K325 GR	82,5	4500	4,354	Material: EPDM-PP Color: Black	PP
11290105		1873 TAB K450 GR	114,3				
11290202	Nickel Plated Steel	1873 NP TAB K325 GR	82,5	4500			
11290205		1873 NP TAB K450 GR	114,3				
11290302	Stainless Steel	1873 SS TAB K325 GR	82,5	3500			
11290305		1873 SS TAB K450 GR	114,3				
11350102	C45	1873 TAB K325 GR	82,5	4500	4,354	Material: TPR Color: Red	MWX
11350105		1873 TAB K450 GR	114,3				
11350202	Nickel Plated Steel	1873 NP TAB K325 GR	82,5	4500			
11350205		1873 NP TAB K450 GR	114,3				
11350302	Stainless Steel	1873 SS TAB K325 GR	82,5	3500			
11350305		1873 SS TAB K450 GR	114,3				

1873 GRIPPER GS4

Catena curvilinea
Sideflexing chain / Kurvengängige Scharnierbandkette

The stainless steel version is supplied with LONG-LIFE SS roller chain.





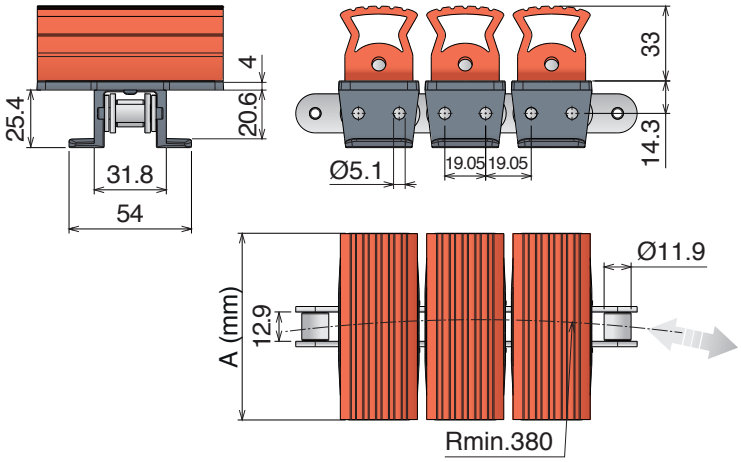

Standard lenght roller chain: 160 Pitches

Tab System

10 feet
3.048 m
80 flights

SPROCKET
ASA 60
Standard on market

pg. 165/170
pg. 516->524

Article-Nr.	Chain	Ref.	A (Width) mm	Max working load N	Weight kg/m	Rubber	Material
11830102	C45	1873 TAB K325 GR	82,5	4500	4,15	Material: TPR Color: Red	LFD
11830105		1873 TAB K450 GR	114,3				
11830202	Nickel Plated Steel	1873 NP TAB K325 GR	82,5	4500			
11830205		1873 NP TAB K450 GR	114,3				
11830302	Stainless Steel	1873 SS TAB K325 GR	82,5	3500			
11830305		1873 SS TAB K450 GR	114,3				
11840102	C45	1873 TAB K325 GR	82,5	4500	4,15	Material: TPR Color: Red	MX
11840105		1873 TAB K450 GR	114,3				
11840202	Nickel Plated Steel	1873 NP TAB K325 GR	82,5	4500			
11840205		1873 NP TAB K450 GR	114,3				
11840302	Stainless Steel	1873 SS TAB K325 GR	82,5	3500			
11840305		1873 SS TAB K450 GR	114,3				
11850102	C45	1873 TAB K325 GR	82,5	4500	4,15	Material: EPDM-PP Color: Black	PP
11850105		1873 TAB K450 GR	114,3				
11850202	Nickel Plated Steel	1873 NP TAB K325 GR	82,5	4500			
11850205		1873 NP TAB K450 GR	114,3				
11850302	Stainless Steel	1873 SS TAB K325 GR	82,5	3500			
11850305		1873 SS TAB K450 GR	114,3				
11860102	C45	1873 TAB K325 GR	82,5	4500	4,15	Material: TPR Color: Red	MWX
11860105		1873 TAB K450 GR	114,3				
11860202	Nickel Plated Steel	1873 NP TAB K325 GR	82,5	4500			
11860205		1873 NP TAB K450 GR	114,3				
11860302	Stainless Steel	1873 SS TAB K325 GR	82,5	3500			
11860305		1873 SS TAB K450 GR	114,3				

1873 D-SHAPE

Catena curvilinea
Sideflexing chain / Kurvengängige Scharnierbandkette

The stainless steel version is supplied with LONG-LIFE SS roller chain.



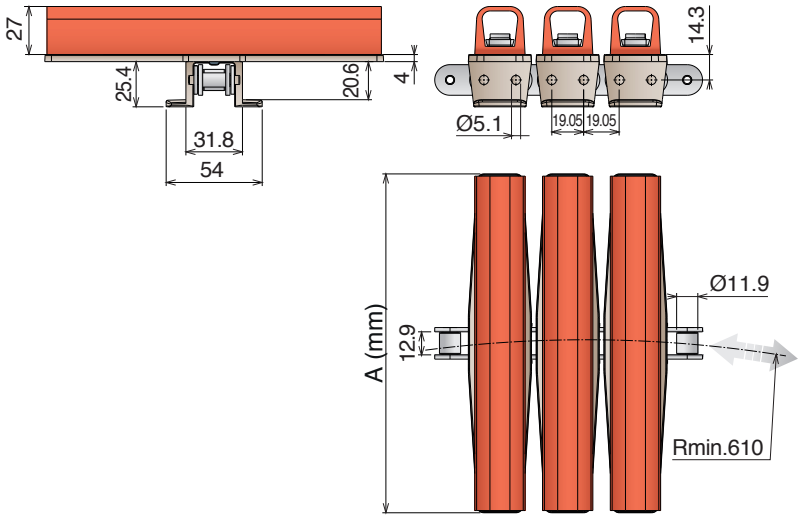

10 feet
3.048 m
80 flights

SPROCKET
ASA 60
Standard on market

pg. 165/170
pg. 516->524

Tab System

Standard lenght roller chain: 160 Pitches

Article-Nr.	Chain	Ref.	A (Width) mm	Weight kg/m	Max working load N	Rubber	Material
11870106	C45	**1873 TAB K600 D**	152,4	4,00	4500	Material: TPR Color: Red	LF
11870107		**1873 TAB K750 D**	190,5	4,90			
11870206	Nickel Plated Steel	**1873 NP TAB K600 D**	152,4	4,00	4500		
11870207		**1873 NP TAB K750 D**	190,5	4,90			
11870306	Stainless Steel	**1873 SS TAB K600 D**	152,4	4,00	3500		
11870307		**1873 SS TAB K750 D**	190,5	4,90			
11880106	C45	**1873 TAB K600 D**	152,4	4,00	4500	Material: TPR Color: Red	MX
11880107		**1873 TAB K750 D**	190,5	4,90			
11880206	Nickel Plated Steel	**1873 NP TAB K600 D**	152,4	4,00	4500		
11880207		**1873 NP TAB K750 D**	190,5	4,90			
11880306	Stainless Steel	**1873 SS TAB K600 D**	152,4	4,00	3500		
11880307		**1873 SS TAB K750 D**	190,5	4,90			
11890106	C45	**1873 TAB K600 D**	152,4	4,00	4500	Material: EPDM-PP Color: Black	MPX
11890107		**1873 TAB K750 D**	190,5	4,90			
11890206	Nickel Plated Steel	**1873 NP TAB K600 D**	152,4	4,00	4500		
11890207		**1873 NP TAB K750 D**	190,5	4,90			
11890306	Stainless Steel	**1873 SS TAB K600 D**	152,4	4,00	3500		
11890307		**1873 SS TAB K750 D**	190,5	4,90			



1873 MX1

Catena curvilinea
Sideflexing chain / Kurvengängige Scharnierbandkette

The stainless steel version is supplied with LONG-LIFE SS roller chain.

TPR Rubber: 75 ShA



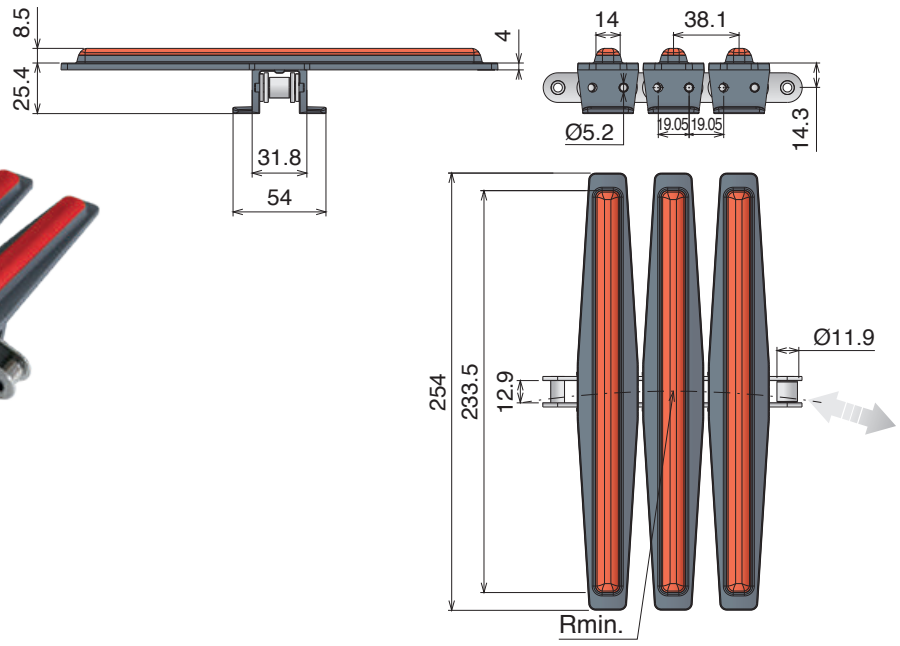

Standard lenght roller chain: 160 Pitches

Tab System

10 feet
3.048 m
80 flights

SPROCKET
ASA 60
Standard on market

pg. 165/170
pg. 516->524

Article-Nr.	Chain	Ref.	Plate Width mm	Weight kg/m	Max working load N	Sideflex radius min. mm	Material
11790108	C45	1873 LF TAB K1000	254,0	2,80	4500	457	LF
11780108	Nickel Plated Steel				4500		
11690108	Stainless Steel				3500		

1873 MX1

Chain for hot-fill applications, neck & cap sterilizing.

+ *ExtraInfo*

+ Care

Designed to keep the products in the correct position during the twist movement.

+ Temperature resistance

The rubber is developed for and perfectly resistant against the higher temperatures of the hot-filled products.

+ Long life roller chain

Special hardened pins and bushing guarantee a longer lifetime. Chain can twist 90° in 1500 mm.

+ Product stability

The new developed design guarantees a perfect connection between rubber and plate.

1873 MX2

Catena curvilinea
Sideflexing chain / Kurvengängige Scharnierbandkette

The stainless steel version is supplied with LONG-LIFE SS roller chain. **TPR Rubber:** 75 ShA



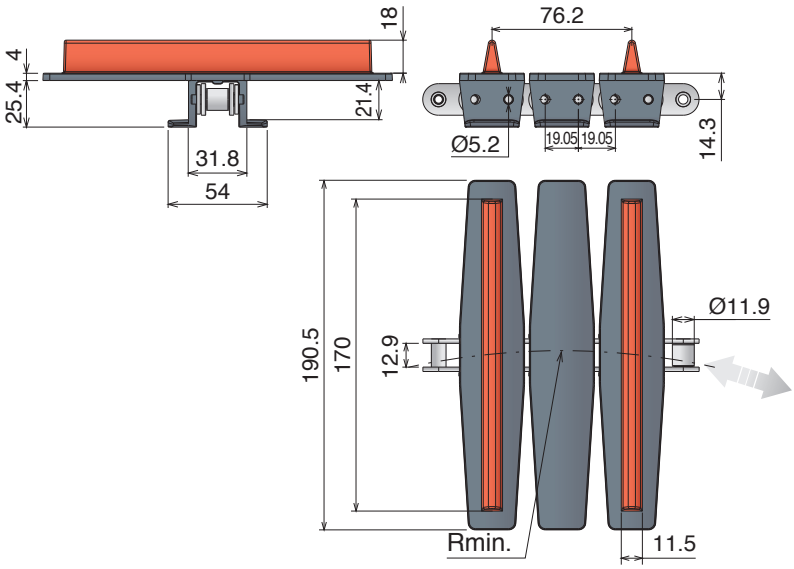

Standard lenght roller chain: 160 Pitches

Tab System

10 feet
3.048 m
80 flights

SPROCKET
ASA 60
Standard on market

pg. 165/170

pg. 516->524

Article-Nr.	Chain	Ref.	Plate Width mm	Weight kg/m	Max working load N	Sideflex radius min. mm	Material
11770107	C45	1873 LF TAB K750	190,5	2,60	4500	457	LF
11760107	Nickel Plated Steel				4500		
11670107	Stainless Steel				3500		

1873 MX2

Chain for twisting cans.

+ Care

Designed to twist cans without pressure.

+ Temperature resistance

Materials are suitable for use at high temperatures.

+ Long life roller chain

Special hardened pins and bushing guarantee a longer lifetime. Chain can twist 90°in 1500 mm.

+ *ExtraInfo*

+ Product stability

The flights assure the position of the cans also at higher speed.



878 GRIPPER

Catena curvilinea
Sideflexing chain / Kurvengängige Scharnierbandkette

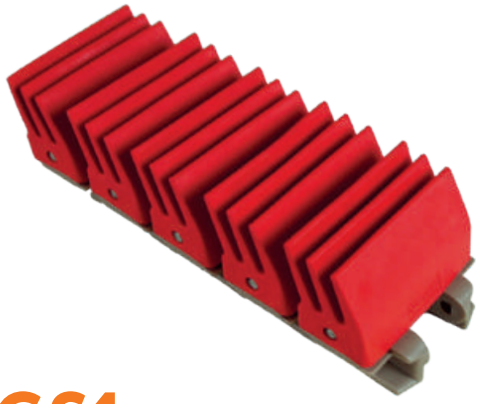

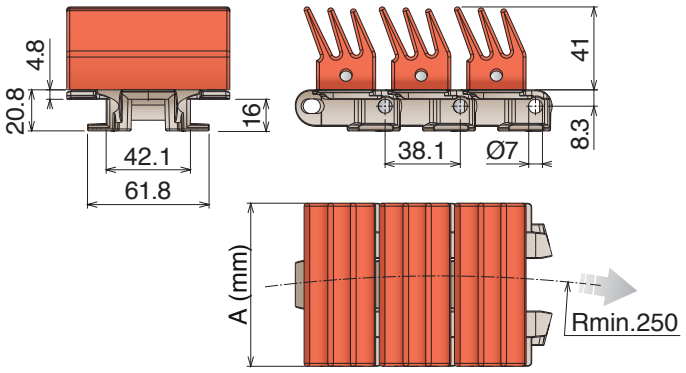

GS1

Tab System

10 feet 3.048 m | 80 links | pg. 92-93 | pg. 163/169 | pg. 516->524

Article-Nr.	Ref.	A (Plate Width) mm	R mm	Weight kg/m	Max working load N	Rubber	Material
11800102	LF 878 GS1 K325	82,5	250	4,65	2200	TPR	LF



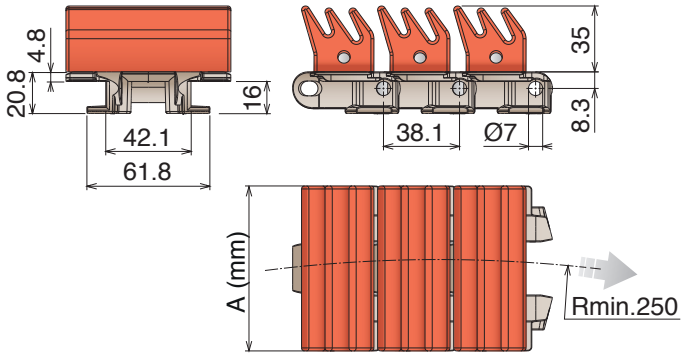

GS2

Tab System

10 feet 3.048 m | 80 links | pg. 92-93 | pg. 163/169 | pg. 516->524

Article-Nr.	Ref.	A (Plate Width) mm	R mm	Weight kg/m	Max working load N	Rubber	Material
11810102	LF 878 GS2 K325	82,5	250	4,05	2200	TPR	LF



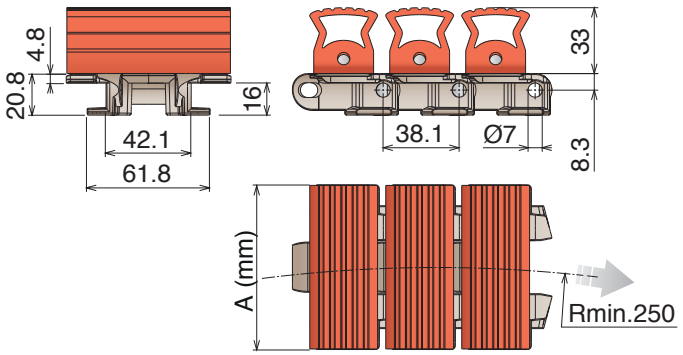

GS4

Tab System

10 feet 3.048 m | 80 links | pg. 92-93 | pg. 163/169 | pg. 516->524

Article-Nr.	Ref.	A (Plate Width) mm	R mm	Weight kg/m	Max working load N	Rubber	Material
11820102	LF 878 GS4 K325	82,5	250	4,10	2200	TPR	LF

1843 Catena curvilinea
Sideflexing chain / Kurvengängige Scharnierbandkette



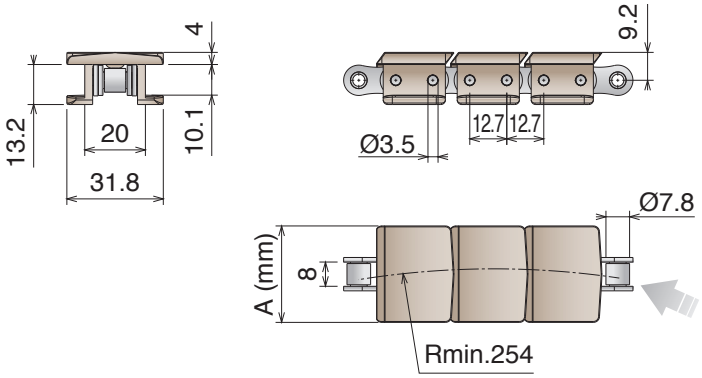

Standard lenght roller chain: 240 Pitches

Tab System

10 feet 3.048 m
120 links

SPROCKET
ASA 40
Standard on market

pg. 166/170
pg. 516->524

Article-Nr.	Chain	Ref.	A (Plate Width) mm	R mm	Weight kg/m	Max working load N	Backflex radius min. mm	Material
11400117	C45	LF 1843 TAB K125	31,8	254	0,74	2700	50	LF
11410117	Stainless Steel		31,8	254	0,74	1900		
11400119	C45	LF 1843 TAB K200	50,8	254	0,89	2700		
11410119	Stainless Steel		50,8	254	0,89	1900		
11400317	C45	MX 1843 TAB K125	31,8	254	0,74	2700	50	MX
11410317	Stainless Steel		31,8	254	0,74	1900		
11400319	C45	MX 1843 TAB K200	50,8	254	0,89	2700		
11410319	Stainless Steel		50,8	254	0,89	1900		

SP 1883

Catena curvilinea
Sideflexing chain / Kurvengängige Scharnierbandkette

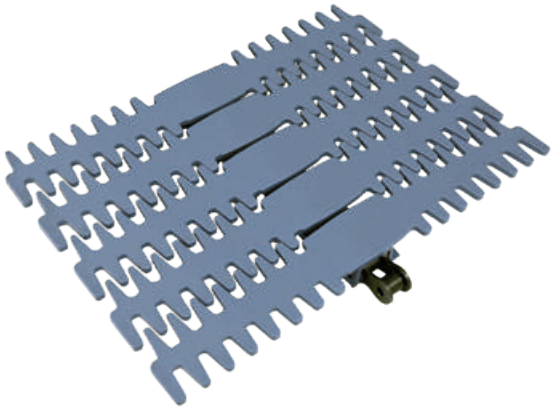

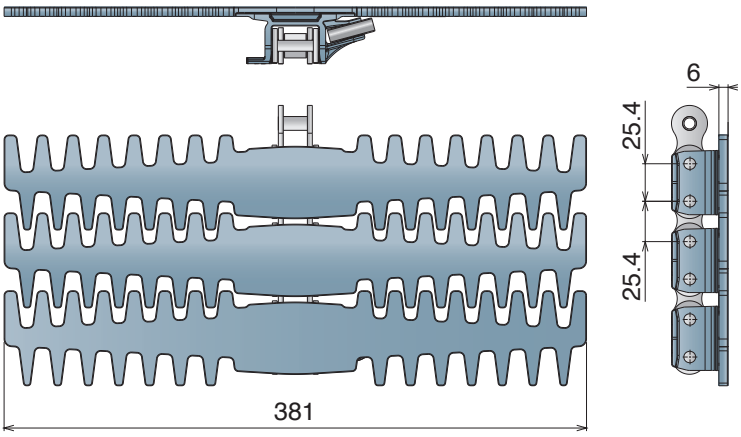

10 feet
3.048 m
60 links

SPROCKET
ASA 80
Standard on market

pg. 516->524

Standard lenght roller chain: 120 Pitches

Article-Nr.	Chain	Ref.	Plate Width mm	Weight kg/m	Max working load N	Sideflex radius min. mm	Material
11640110	C45	**LFA SP 1883 TAB K1500**	381,0	12,5	6500	711	**LFA**

Spiral Conveyor Technology

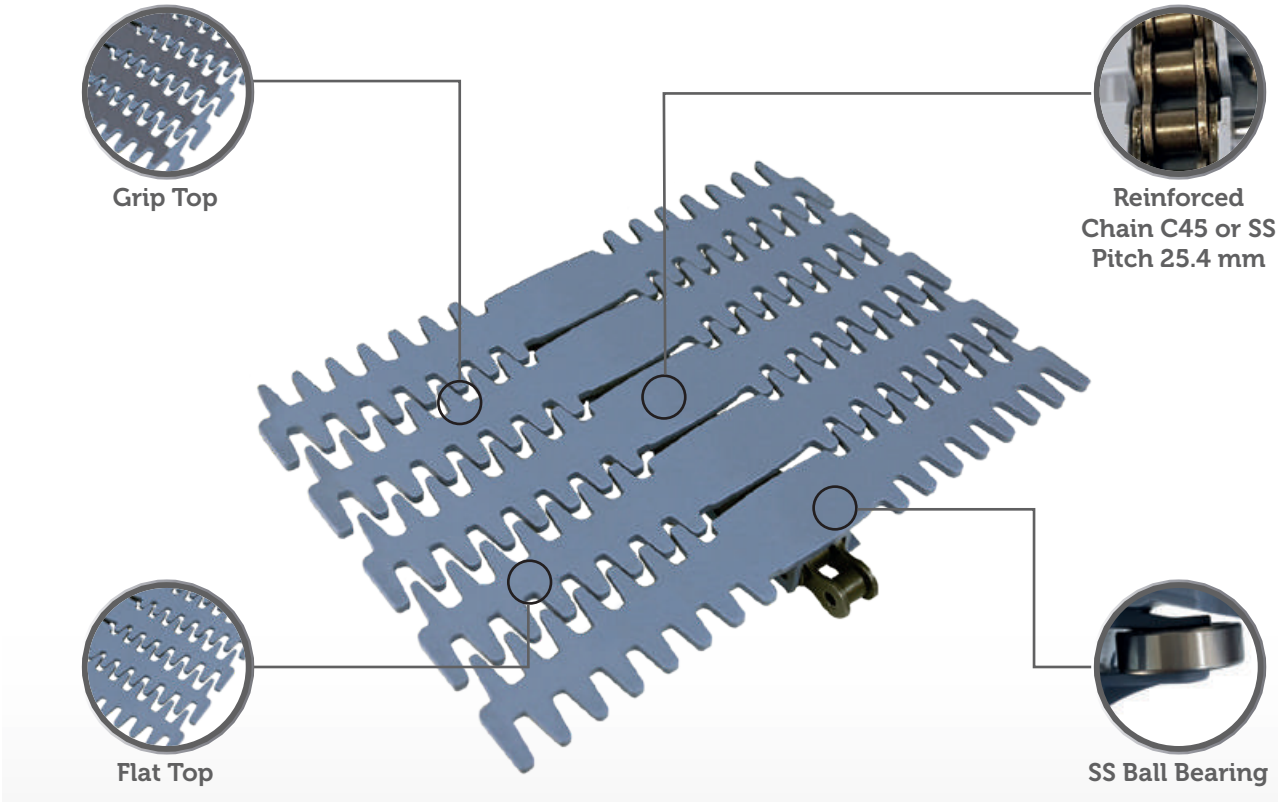

SP 1883 GT

Catena curvilinea
Sideflexing chain / Kurvengängige Scharnierbandkette

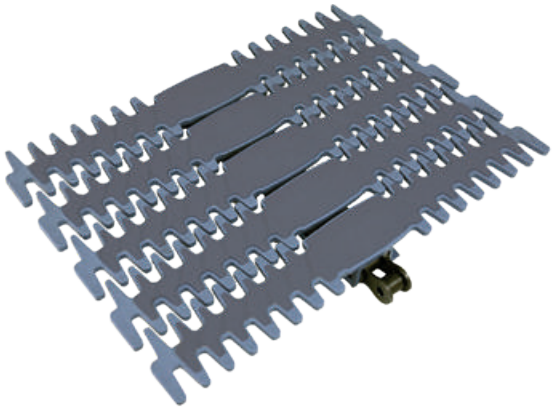

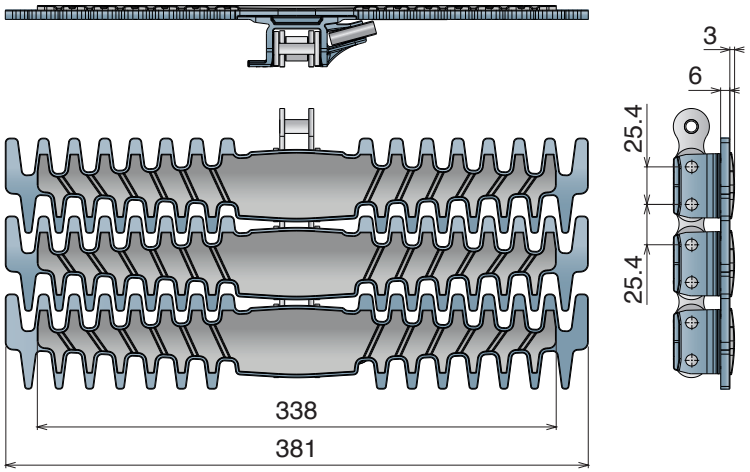

10 feet
3.048 m
60 links

SPROCKET
ASA 80
Standard on market

pg. 516->524

Standard lenght roller chain: 120 Pitches

Article-Nr.	Chain	Ref.	Plate Width mm	Weight kg/m	Max working load N	Sideflex radius min. mm	Material
11650110	C45	**LFA SP 1883 GT TAB K1500**	381,0	13,0	6500	711	**LFA**







CC 600

Catena curvilinea
Sideflexing chain / Kurvengängige Scharnierbandkette

Pins: Stainless Steel | **Backflex radius min.:** 50 mm

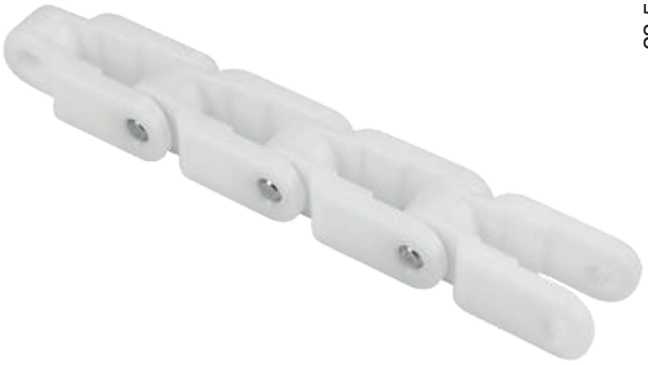

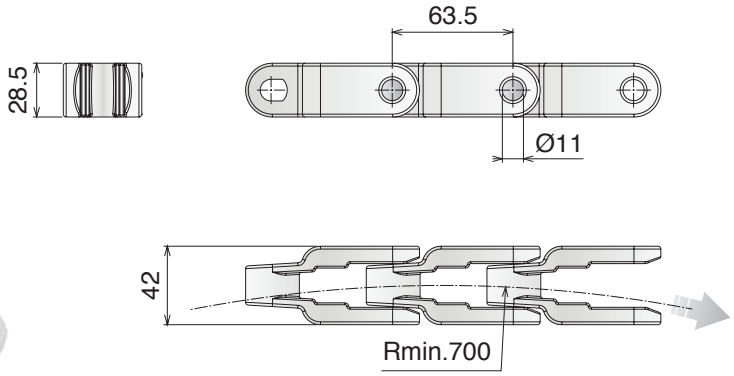

10 feet 3.048 m | 48 links | pg. 101 | pg. 516->524

Article-Nr.	Ref.	Plate Width mm	Weight kg/m	Max working load N	Material
11220400	CC 600	42	1,35	4000	LFN
11220300	CC 600	42	1,35	3200	MX

CC 600 TAB

Catena curvilinea
Sideflexing chain / Kurvengängige Scharnierbandkette

Pins: Stainless Steel | **Backflex radius min.:** 50 mm



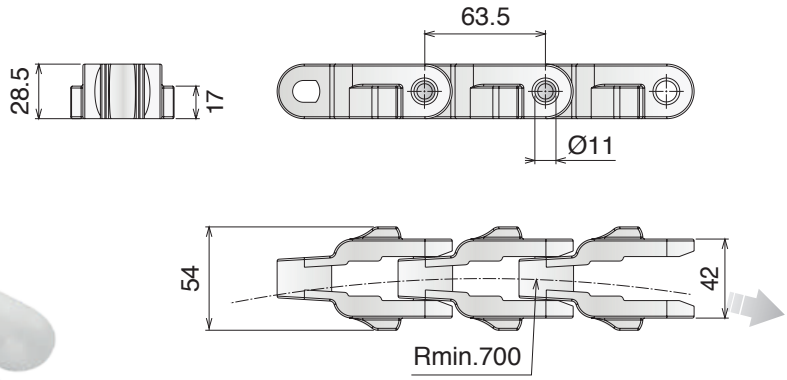

Tab System

10 feet 3.048 m | 48 links | pg. 101 | pg. 516->524

Article-Nr.	Ref.	Plate Width mm	Weight kg/m	Max working load N	Material
11230400	CC 600 TAB	42	1,45	4000	LFN
11230300	CC 600 TAB	42	1,45	3200	MX

CC 600 D

Catena curvilinea
Sideflexing chain / Kurvengängige Scharnierbandkette

Pins: Stainless Steel | **Backflex radius min.:** 50 mm

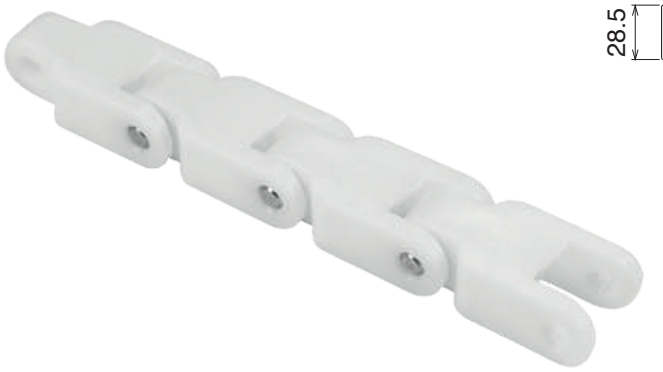

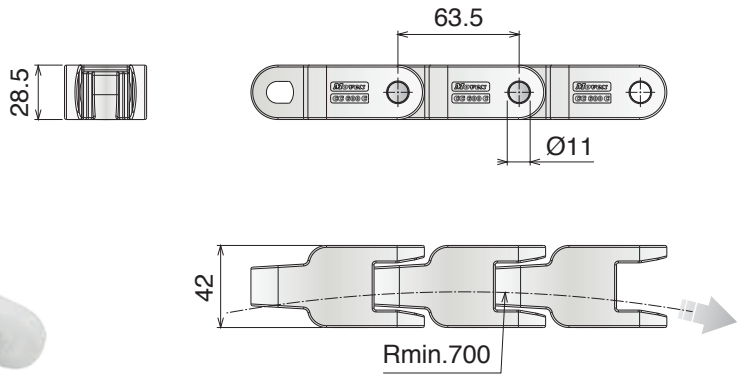

10 feet 3.048 m | 48 links | pg. 101 | pg. 516->524

Article-Nr.	Ref.	Plate Width mm	Weight kg/m	Max working load N	Material
11220410	CC 600 D	42	1,40	4000	LFN
11220310	CC 600 D	42	1,40	3200	MX

CC 600 D TAB

Catena curvilinea
Sideflexing chain / Kurvengängige Scharnierbandkette

Pins: Stainless Steel | **Backflex radius min.:** 50 mm

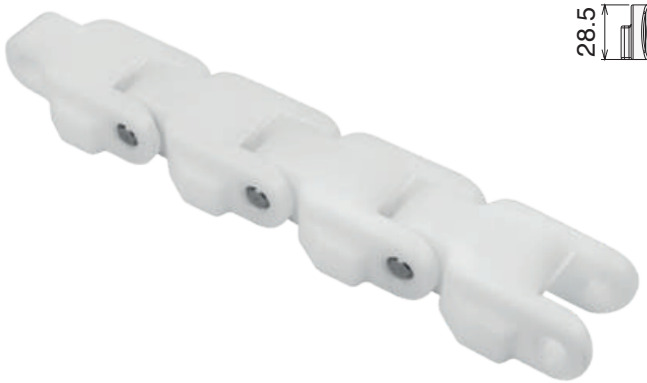

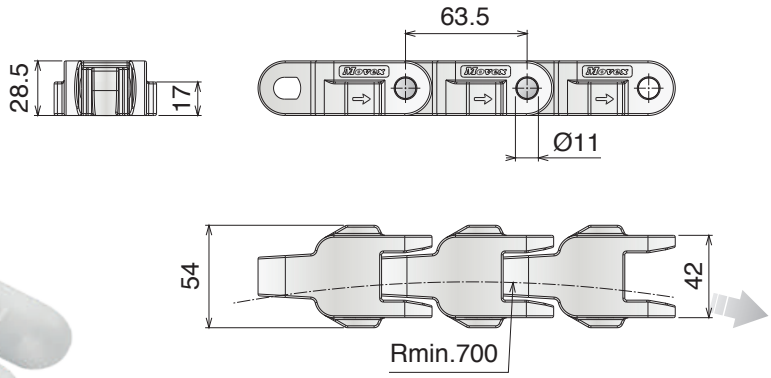

Tab System

10 feet 3.048 m | 48 links | pg. 101 | pg. 516->524

Article-Nr.	Ref.	Plate Width mm	Weight kg/m	Max working load N	Material
11230410	CC 600 D TAB	42	1,55	4000	LFN
11230310	CC 600 D TAB	42	1,55	3200	MX

CC 1400

Catena curvilinea
Sideflexing chain / Kurvengängige Scharnierbandkette

Pins: Stainless Steel | **Backflex radius min.:** 50 mm



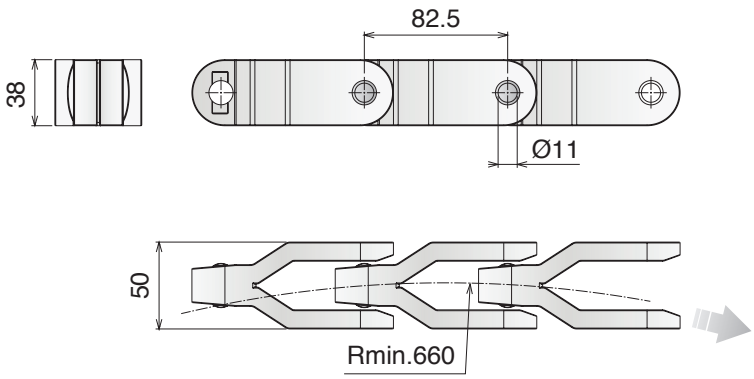

10 feet 3.052 m | 37 links | pg. 101 | pg. 516->524

Article-Nr.	Ref.	Plate Width mm	Weight kg/m	Max working load N	Material
11300400	CC 1400	50	3,24	6500	LFN
11300300	CC 1400	50	3,24	5200	MX

CC 1400 TAB

Catena curvilinea
Sideflexing chain / Kurvengängige Scharnierbandkette

Pins: Stainless Steel | **Backflex radius min.:** 50 mm



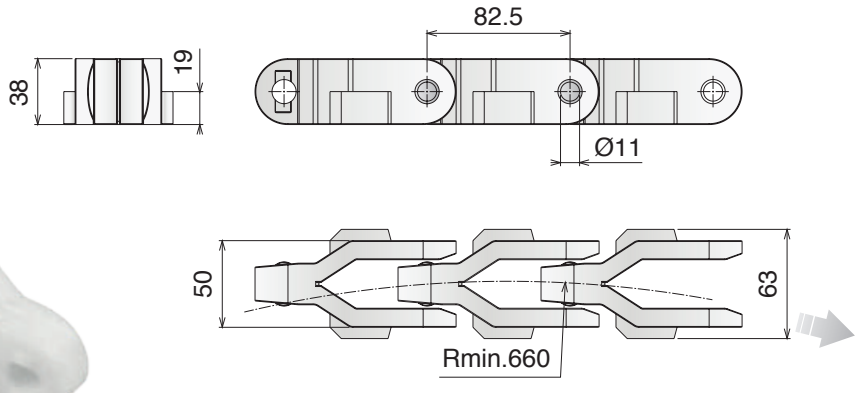

Tab System

10 feet 3.052 m | 37 links | pg. 101 | pg. 516->524

Article-Nr.	Ref.	Plate Width mm	Weight kg/m	Max working load N	Material
11310400	CC 1400 TAB	50	3,24	6500	LFN
11310300	CC 1400 TAB	50	3,24	5200	MX

1701 TAB OP

Catena curvilinea
Sideflexing chain / Kurvengängige Scharnierbandkette

Pins: Stainless Steel | **Backflex radius min.:** 50 mm



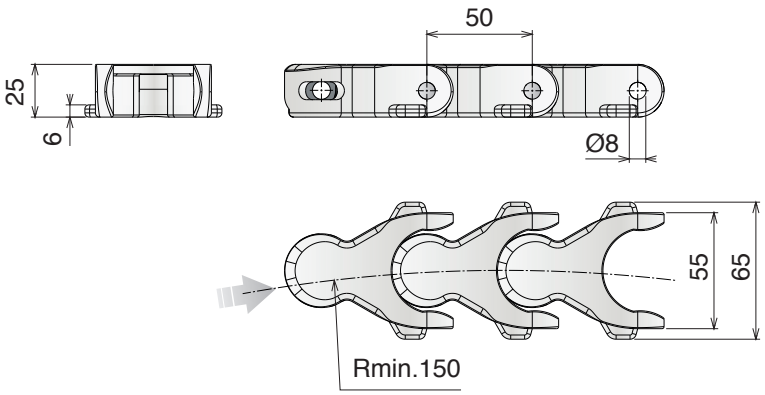

Tab System

10 feet
3.050 m
61 links

pg. 102
pg. 167/1671
pg. 516->524

Article-Nr.	Ref.	Plate Width mm	Weight kg/m	Max working load N	Material
11360400	LF 1701 TAB OP	55	1,40	2700	LFN

1701 TAB OPF

Catena curvilinea
Sideflexing chain / Kurvengängige Scharnierbandkette

Pins: Stainless Steel



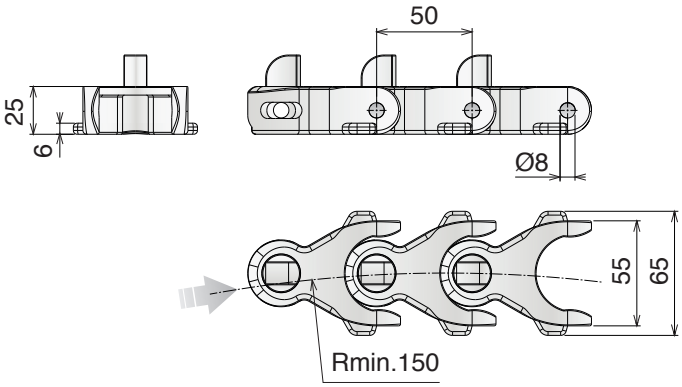

Type A

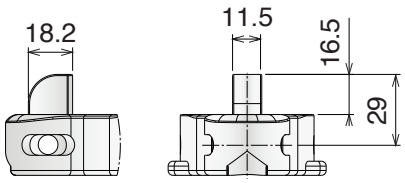

Type B

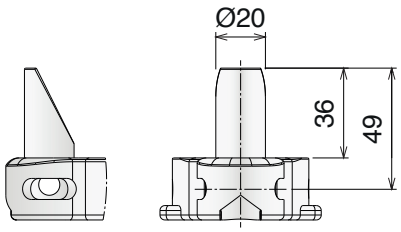

Type C

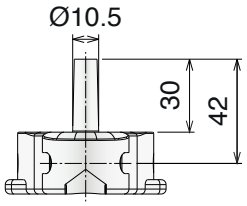

Type D

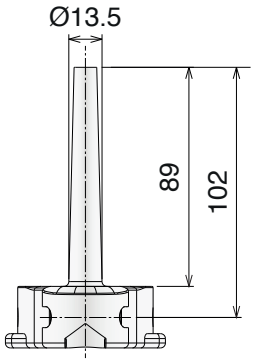

Tab System

10 feet 3.050 m — 61 links | pg. 102 | pg. 167/171 | pg. 516->524

Article-Nr.	Ref.	Plate Width mm	Weight kg/m	Max working load N	Material
11360400-FA	1701 TAB Type A	55	1,60	2700	LFN
11360400-FB	1701 TAB Type B	55	1,60		
11360400-FC	1701 TAB Type C	55	2,00		
11360400-FD	1701 TAB Type D	55	2,30		

1706

Catena curvilinea
Sideflexing chain / Kurvengängige Scharnierbandkette

Pins: Stainless Steel | **Backflex radius min.:** 50 mm



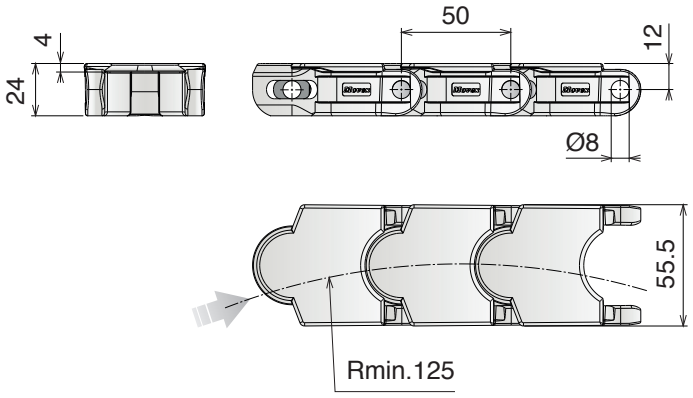

10 feet 3.050 m | 61 links | pg. 102 | pg. 167/171 | pg. 516->524

Article-Nr.	Ref.	Plate Width mm	Weight kg/m	Max working load N	Material
11720400	LF 1706	55,5	1,35	2300	LFN
11720300	MX 1706	55,5	1,35	1900	MX

1706 TAB

Catena curvilinea
Sideflexing chain / Kurvengängige Scharnierbandkette

Pins: Stainless Steel | **Backflex radius min.:** 50 mm



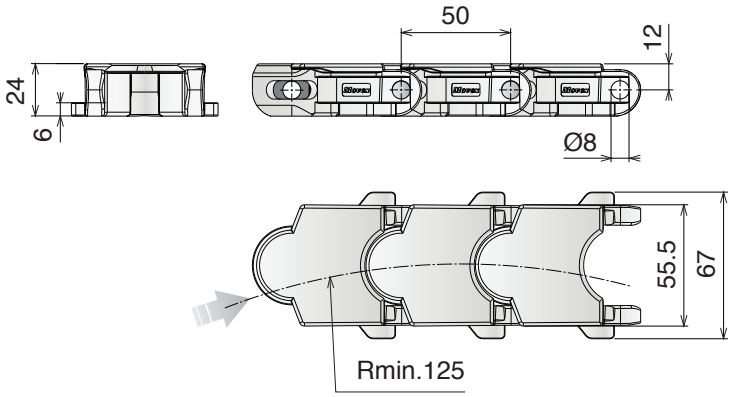

Tab System

10 feet 3.050 m | 61 links | pg. 102 | pg. 167/171 | pg. 516->524

Article-Nr.	Ref.	Plate Width mm	Weight kg/m	Max working load N	Material
11730400	LF 1706 TAB	55,5	1,38	2300	LFN
11730300	MX 1706 TAB	55,5	1,38	1900	MX

765 NO GAP

Catena curvilinea
Sideflexing chain / Kurvengängige Scharnierbandkette

Pins: Stainless Steel | **Backflex radius min.:** 50 mm



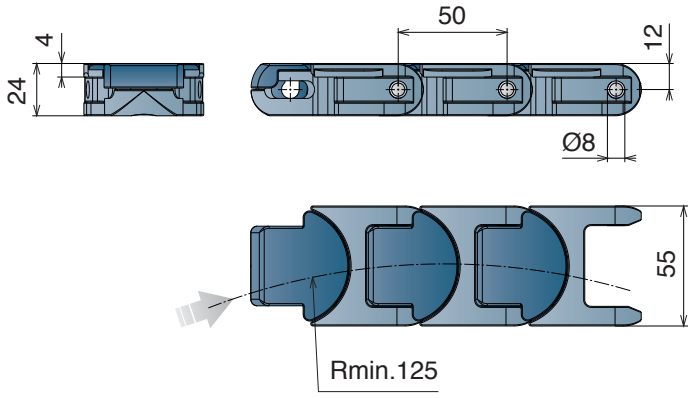

10 feet
3.050 m
61 links

pg. 102
pg. 516->524

Article-Nr.	Ref.	Plate Width mm	Weight kg/m	Max working load N	Material
11940100	765 LFA NO GAP	55	1,46	2670	LFA

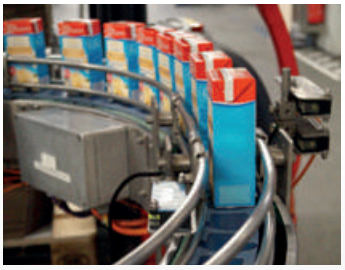



Advantages:

- Improved safety
- Product stability
- Ideal to trasporting small products

43 MF-63 MF-83 MF-103 MF

Catena curvilinea
Sideflexing chain
Kurvengängige Scharnierbandkette

Pins: Stainless Steel | **Backflex radius min.:** 50 mm

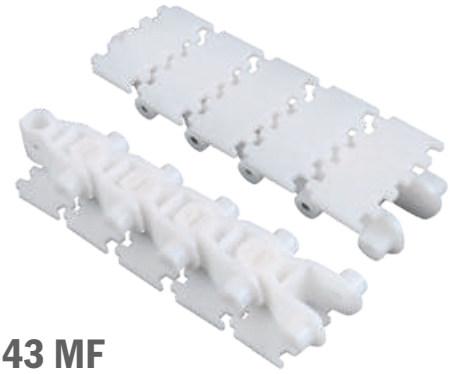

43 MF

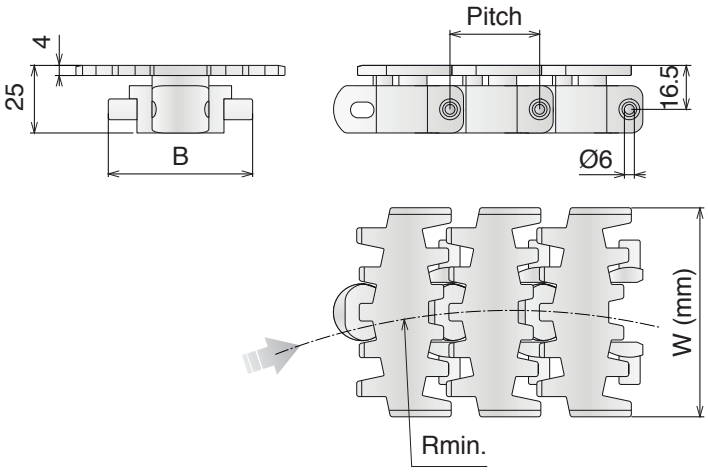

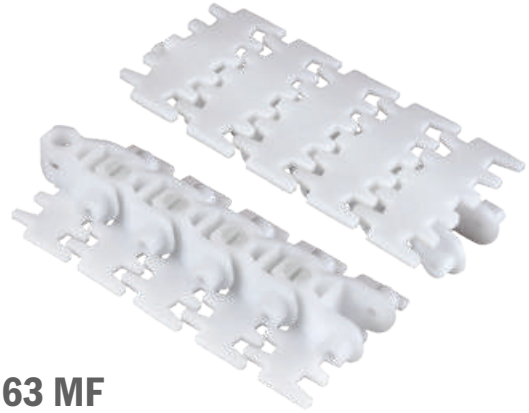

63 MF

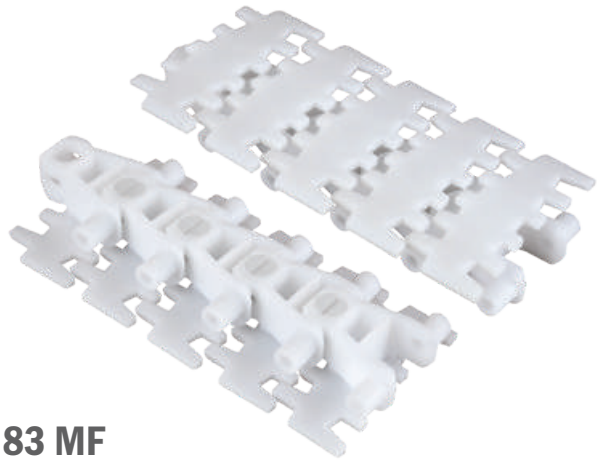

83 MF

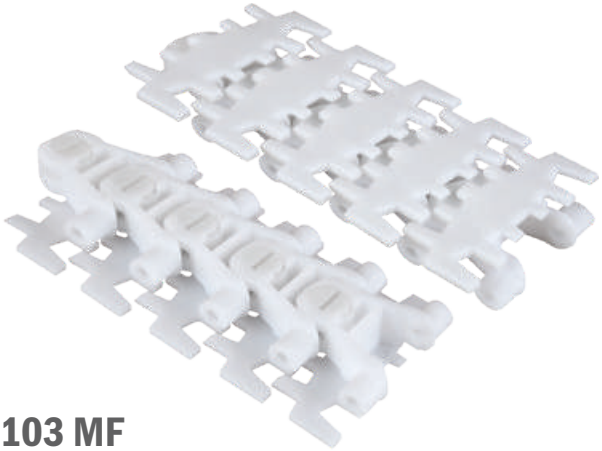

103 MF

pg. 103/104
pg. 516->524

Article-Nr.	Ref.	W (Plate Width) mm	B mm	Weight kg/m	Pitch	Radius min.	Links	Max working load N	Material
12010400	43 MF	43	37	0,60	25,4	140	3.048 (120 links)	2100	LFN
12010401	63 MF	63	-	0,80	25,4	150	3.048 (120 links)		
12010402	83 MF	83	58	1,70	33,5	160	3.015 (90 links)		
12010403	103 MF	103	75	2,00	33,5	170	3.015 (90 links)		

83 M-140 M

Catena curvilinea
Sideflexing chain / Kurvengängige Scharnierbandkette

Pins: Stainless Steel



83 M

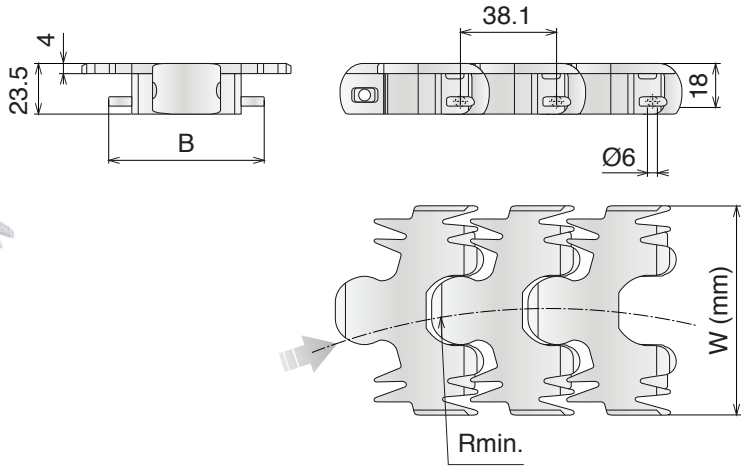

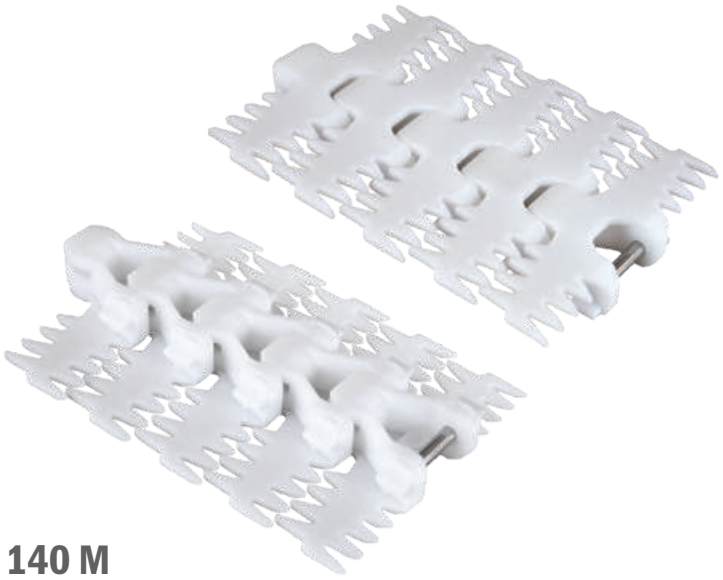

140 M

10 feet
3.048 m
80 links

pg. 105

pg. 516->524

Article-Nr.	Ref.	W (Plate Width) mm	B mm	Weight kg/m	Pitch	Radius min.	Max working load N	Material
12020402	83 M	83	63	1,35	38,1	150	2100	LFN
12020404	140 M	140	63	2,10	38,1	250		

83 M/PU

Catena curvilinea
Sideflexing chain / Kurvengängige Scharnierbandkette

Pins: Stainless Steel

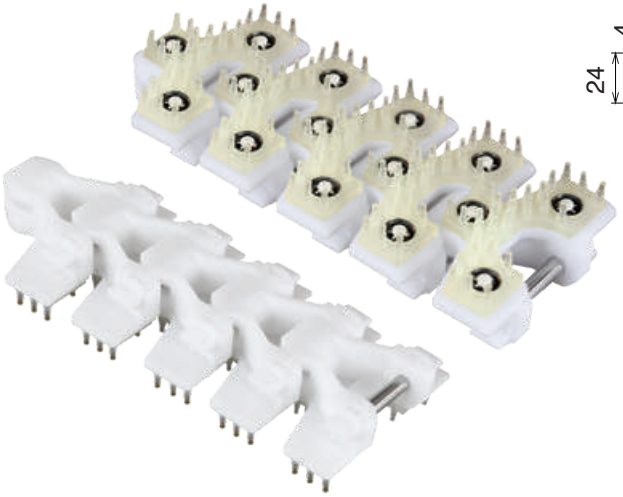

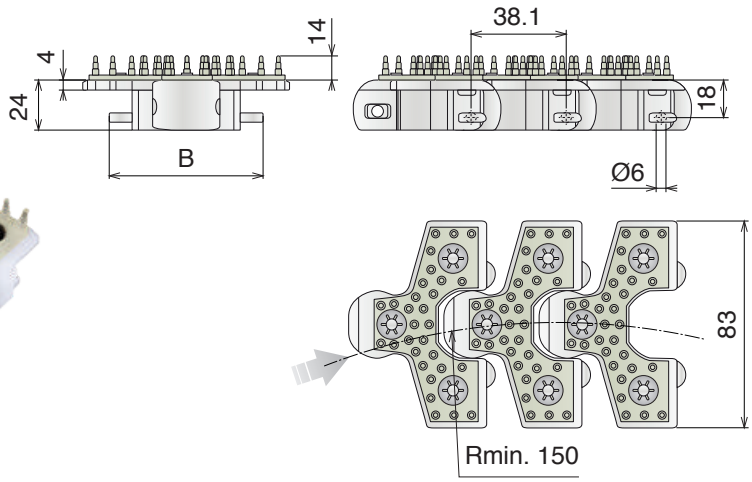

10 feet
3.048 m
80 links

pg. 105
pg. 516->524

Article-Nr.	Ref.	Plate Width mm	B mm	Weight kg/m	Pitch	Radius min.	Max working load N	Material
12030402	83 M/PU	83	63	0,80	38,1	150	2100	LFN

Molded Sprockets
IMPROVED VERSION



Improved strenght
+30%

New color
The sprocket becomes black.

Superior engagement
A new design improves interaction between chain-sprocket.

Improved Design and Performance

Ingranaggi

L'ingranaggio è uno dei più importanti componenti di un impianto di trasporto. Una ruota ben disegnata assicura una migliore performance e una maggior durata del trasportatore. Offriamo una vasta gamma di ruote fresate e stampate per soddisfare ogni necessità applicativa.

Gli ingranaggi Movex nascono da anni di esperienza specifica ed offriamo la più avanzata soluzione:

***1.** Tutte le ruote sono concepite in due pezzi per un più facile montaggio/smontaggio sull'albero.*

***2.** Tutte le superfici sono lisce per prevenive qualsiasi deposito.*

***3.** I nostri ingranaggi sono ottenuti dal miglior poliammide per assicurare la più lunga durata e resistenza all'usura.*

***4.** Il profilo del dente è specificamente disegnato per offrire la maggior superficie di contatto con la catena e/o il tappeto riducendo la forza esercitata su ciascun dente consentendo una vita più lunga dell'ingranaggio. Il design è sviluppato inoltre tenendo conto dell'allungamento naturale di catena/tappeto, garantendo agli stessi di performare senza problemi entro la soglia di tolleranza dell'allungamento.*

***5.** Le viti in acciaio inossidabile vengono accoppiate con dadi autobloccanti e/o inserti nichelati per consentire un più facile smontaggio/riassemblaggio anche dopo un lungo periodo dall'installazione.*

Sprockets

The sprocket is one of the most important parts of a conveyor. A well designed sprocket will ensure that the conveyor runs smoothly and efficiently for a long time. We have a wide variety of machined and molded sprockets to cover all application needs. Movex Sprockets are designed based on many years of experience to provide you the ultimate solution.

***1.** All our sprockets are designed split so that it can be installed and uninstalled from the shaft easily.*

***2.** All surfaces and edges from the sprockets are smooth to prevent dirt depositing easily.*

This makes cleaning easier, maintaining a high hygiene standard.

***3.** Our sprockets are produced from the best polyamide material to ensure longer wear life.*

***4.** The sprocket teeth are uniquely designed to provide maximum contact surface with the chain henceforth giving lowest applied force per tooth. This ensures longer wear life for the sprocket. In addition the sprockets are designed in such a way that chain elongation tolerances can be absorbed. This will assure a life-long positive engagement between chain and sprocket.*

***5.** Bolds used to assemble the sprockets are paired with nickel or zinc plated steel nuts to ensure easy removal.*

Kettenräder

Das Kettenrad ist eines der wichtigsten Komponenten in Transportanlagen. Ein intelligentes Design gewährleistet einen ruhigen Lauf und Effizienz für einen langen Zeitraum. Wir bieten ein umfangreiches Programm in gefräster oder gespritzter Ausführung um Ihren Anforderungen gerecht zu werden.

Movex Kettenräder basieren auf jahrelangen Erfahrungen aus verschiedenen Industrien und vereinigen diese Erkenntnisse in einem innovativen Design.

***1.** Alle unsere Kettenräder sind zweigeteilt, d.h. einfache Montage und Demontage ohne großen Zeitaufwand.*

***2.** Alle Oberflächen sind glatt um Schmutzablagerungen zu vermeiden dies erleichtert eine schnelle und einfache Reinigung.*

***3.** Die Auswahl der Materialien bietet eine lange Lebensdauer.*

***4.** Die Zahnform ist so gewählt, dass maximale Kontaktfläche mit der Kette / Mattenkette erreicht wird. Dies ermöglicht eine lange Lebensdauer des Kettenrades und der Kette. Das Kettenraddesign ermöglicht die Kompensation einer gewissen Kettenlängung.*

***5.** Schrauben aus Edelstahl verbunden mit einer selbstsichernden Mutter aus vernickeltem Stahl. Damit lassen sich die Räder auch noch nach Jahren problemlos demontieren.*

Movex®

8



Chain sprockets

815  Pag 82

815  Pag 82

815  Pag 83

815  Pag 83

881  Pag 84

881  Pag 84

881  Pag 85

881  Pag 85

805-821  Pag 86

805-821  Pag 86

8157  Pag 87

8157  Pag 87

820  Pag 88

820  Pag 88

820  Pag 89

820  Pag 89

831  Pag 90

831  Pag 90

831  Pag 91

831  Pag 91

880  Pag 92

880  Pag 92

880  Pag 93

880  Pag 93

882  Pag 94

882  Pag 94

882  Pag 95

882  Pag 95

512  Pag 96

512  Pag 96

815  Pag 97

8157  Pag 97

805  Pag 98

820  Pag 98

512  Pag 99

815 MINI  Pag 100

815 MINI  Pag 100

CC 600  Pag 101

CC 1400 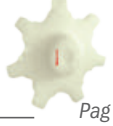 Pag 101

1701-1706-765 Pag 102

1701-1706-765 Pag 102

43 MF-63 MF Pag 103

103 MF Pag 103

83 MF Pag 104

83 MF Pag 104

83 M-83 M/PU 140 M Pag 105

83 M-83 M/PU 140 M Pag 105

TURNING DISK Pag 106

Info Material:

pg. 529

Materiale / *Material / Materialien:*
Poliammide/*Polyamide/Polyamid*
Viti: Acciaio inox/*Screws: Stainless steel/Schrauben: Edelstahl*
Dadi: ferro zincato/*Nuts: zinc plated steel/Mutter: verzinkter Stahl*

815 Ruota traino divisa, fresata
Split drive sprocket, machined / geteiltes Antriebskettenrad gefräst

Used also for Series 881 M



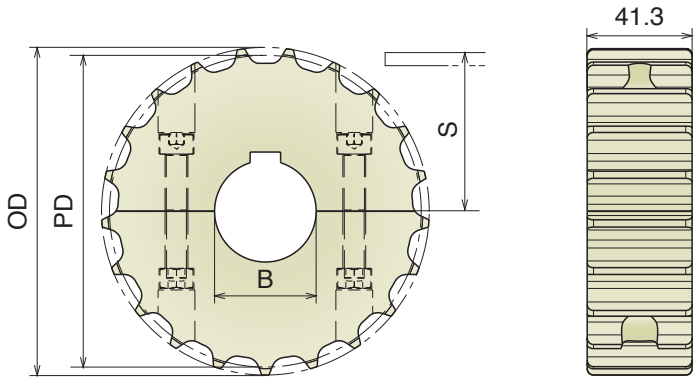

Part	Article-Nr.	Z-	Bore	PD	OD	S
501	50101	17	25	105,5	103,9	55,9
501	50102		30			
501	50103		35			
501	50104		40			
502	50201	19	25	117,3	117,0	61,9
502	50202		30			
502	50203		35			
502	50204		40			
503	50301	21	25	129,3	129,0	67,8
503	50302		30			
503	50303		35			
503	50304		40			
504	50401	23	25	141,2	142,0	73,8
504	50402		30			
504	50403		35			
504	50404		40			
505	50501	25	25	153,2	154,0	79,8
505	50502		30			
505	50503		35			
505	50504		40			
506	50601	27	25	165,2	166,8	85,8
506	50602		30			
506	50603		35			
506	50604		40			
507	50701	29	25	177,2	178,5	91,8
507	50702		30			
507	50703		35			
507	50704		40			

Ruota rinvio divisa, fresata
Split idler sprocket, machined / geteiltes Umlenkrad, gefräst



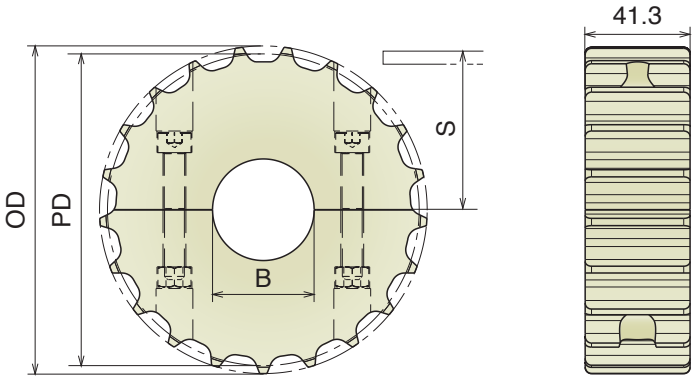

Part	Article-Nr.	Z-	Bore	PD	OD	S
501	50150	17	18*	105,5	103,9	55,9
501	50151		25			
501	50152		30			
501	50153		35			
501	50154		40			
502	50250	19	18*	117,3	117,0	61,9
502	50251		25			
502	50252		30			
502	50253		35			
502	50254		40			
503	50350	21	18*	129,3	129,0	67,8
503	50351		25			
503	50352		30			
503	50353		35			
503	50354		40			
504	50450	23	18*	141,2	142,0	73,8
504	50451		25			
504	50452		30			
504	50453		35			
504	50454		40			
505	50550	25	18*	153,2	154,0	79,8
505	50551		25			
505	50552		30			
505	50553		35			
505	50554		40			
506	50650	27	18*	165,2	166,8	85,8
506	50651		25			
506	50652		30			
506	50653		35			
506	50654		40			
507	50750	29	18*	177,2	178,5	91,8
507	50751		25			
507	50752		30			
507	50753		35			
507	50754		40			

*Plain Bore

815 Ruota traino divisa, stampata
Split drive sprocket, molded / geteiltes Antriebskettenrad, gespritzt

Used also for Series 881 M

Part	Article-Nr.	Z-	Bore	PD	OD	S
508	50801	21	25	129,3	129,0	67,8
508	50802		30			
508	50803		35			
508	50804		40			
509	50901	23	25	141,2	142,0	73,8
509	50902		30			
509	50903		35			
509	50904		40			
510	51001	25	25	153,2	154,0	79,8
510	51002		30			
510	51003		35			
510	51004		40			



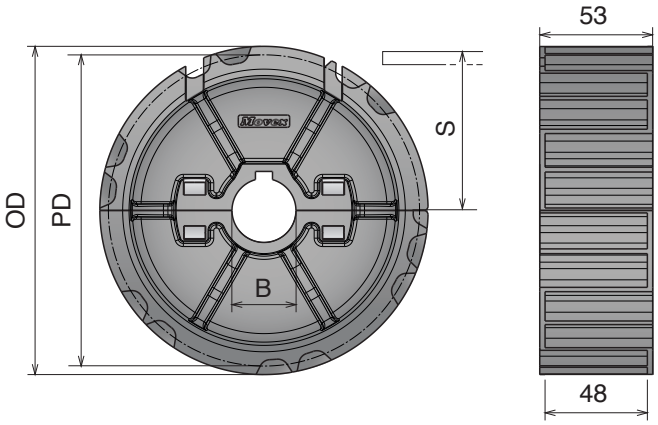

Improved Design and Performance

Ruota rinvio divisa, stampata
Split idler sprocket, molded / geteiltes Umlenkrad, gespritzt

Part	Article-Nr.	Z-	Bore	PD	OD	S
508	50851	21	25	129,3	129,0	67,8
508	50852		30			
508	50853		35			
508	50854		40			
509	50951	23	25	141,2	142,0	73,8
509	50952		30			
509	50953		35			
509	50954		40			
510	51051	25	25	153,2	154,0	79,8
510	51052		30			
510	51053		35			
510	51054		40			



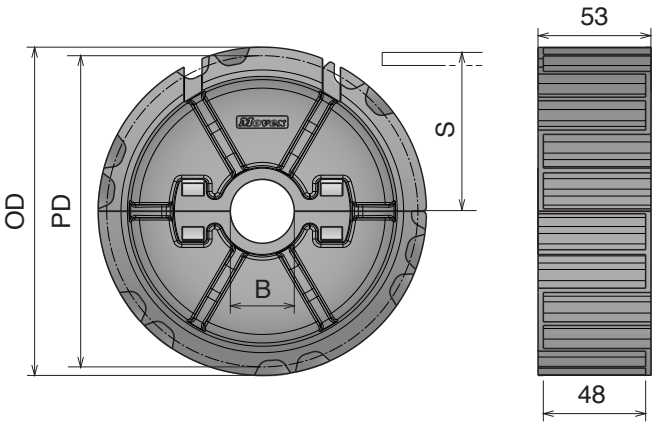

Improved Design and Performance

Materiale / *Material / Materialien:*
Poliammide/*Polyamide/Polyamid*
Viti: Acciaio inox/*Screws: Stainless steel/Schrauben: Edelstahl*
Dadi: ferro zincato/*Nuts: zinc plated steel/Mutter: verzinkter Stahl*

881 Ruota traino divisa, fresata
Split drive sprocket, machined / geteiltes Antriebskettenrad gefräst

Used for Series 881 B and 881 TAB



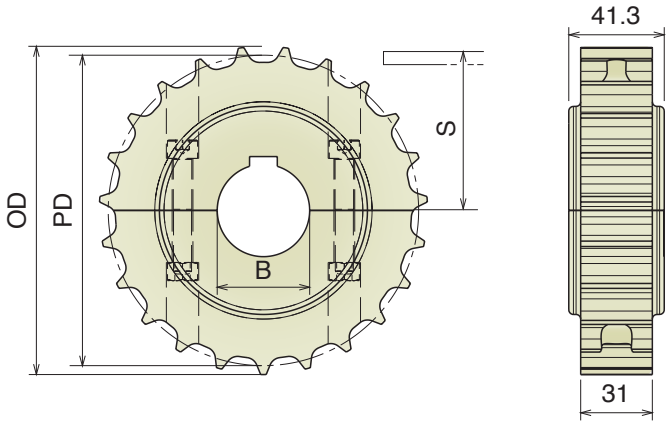

Part	Article-Nr.	Z-	Bore	PD	OD	S
511	51101	17	25	105,5	103,9	55,9
511	51102		30			
511	51103		35			
511	51104		40			
512	51201	19	25	117,3	117,0	61,9
512	51202		30			
512	51203		35			
512	51204		40			
513	51301	21	25	129,3	129,0	67,8
513	51302		30			
513	51303		35			
513	51304		40			
514	51401	23	25	141,2	142,0	73,8
514	51402		30			
514	51403		35			
514	51404		40			
515	51501	25	25	153,2	154,0	79,8
515	51502		30			
515	51503		35			
515	51504		40			
516	51601	27	25	165,2	166,8	85,8
516	51602		30			
516	51603		35			
516	51604		40			
517	51701	29	25	177,2	178,5	91,8
517	51702		30			
517	51703		35			
517	51704		40			

Ruota rinvio divisa, fresata
Split idler sprocket, machined / geteiltes Umlenkrad, gefräst



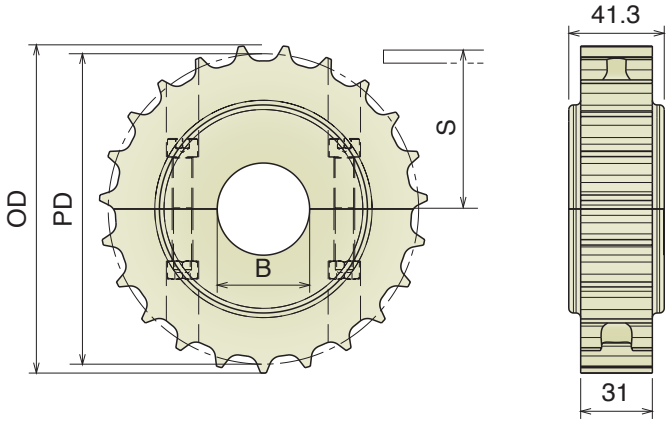

Part	Article-Nr.	Z-	Bore	PD	OD	S
511	51150	17	18*	105,5	103,9	55,9
511	51151		25			
511	51152		30			
511	51153		35			
511	51154		40			
512	51250	19	18*	117,3	117,0	61,9
512	51251		25			
512	51252		30			
512	51253		35			
512	51254		40			
513	51350	21	18*	129,3	129,0	67,8
513	51351		25			
513	51352		30			
513	51353		35			
513	51354		40			
514	51450	23	18*	141,2	142,0	73,8
514	51451		25			
514	51452		30			
514	51453		35			
514	51454		40			
515	51550	25	18*	153,2	154,0	79,8
515	51551		25			
515	51552		30			
515	51553		35			
515	51554		40			
516	51650	27	18*	165,2	166,8	85,8
516	51651		25			
516	51652		30			
516	51653		35			
516	51654		40			
517	51750	29	18*	177,2	178,5	91,8
517	51751		25			
517	51752		30			
517	51753		35			
517	51754		40			

*Plain Bore

Materiale / *Material / Materialien:*
Poliammide rinforzato/Polyamide reinforced/Verstärktes Polyamid
Viti: Acciaio inox/*Screws: Stainless steel/Schrauben: Edelstahl*
Dadi: Ottone nichelato/*Nuts: Nickel plated brass/Mutter: Messing*

881 Ruota traino divisa, stampata
Split drive sprocket, molded / geteiltes Antriebskettenrad, gespritzt

Used for Series 881 B and 881 TAB

Part	Article-Nr.	Z-	Bore	PD	OD	S
518	51801	21	25	129,3	129,0	67,8
518	51802		30			
518	51803		35			
518	51804		40			
519	51901	23	25	141,2	142,0	73,8
519	51902		30			
519	51903		35			
519	51904		40			
520	52001	25	25	153,2	154,0	79,8
520	52002		30			
520	52003		35			
520	52004		40			



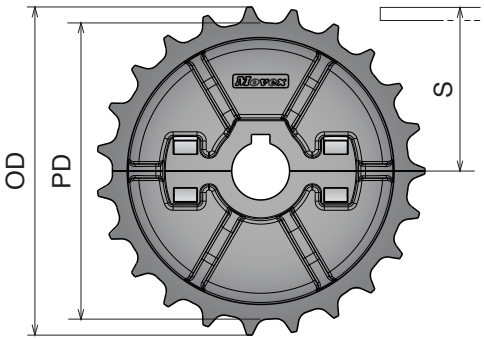

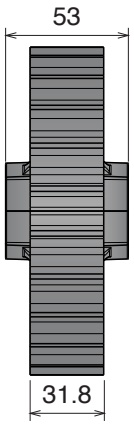

Improved Design and Performance

Ruota rinvio divisa, stampata
Split idler sprocket, molded / geteiltes Umlenkrad, gespritzt

Part	Article-Nr.	Z-	Bore	PD	OD	S
518	51851	21	25	129,3	129,0	67,8
518	51852		30			
518	51853		35			
518	51854		40			
519	51951	23	25	141,2	142,0	73,8
519	51952		30			
519	51953		35			
519	51954		40			
520	52051	25	25	153,2	154,0	79,8
520	52052		30			
520	52053		35			
520	52054		40			



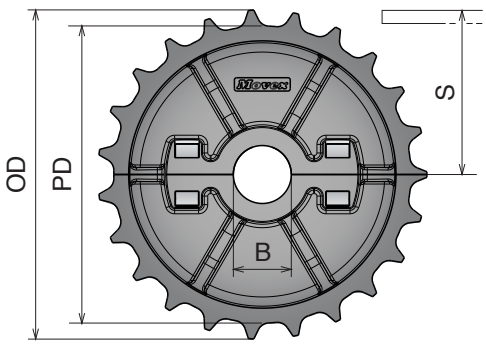

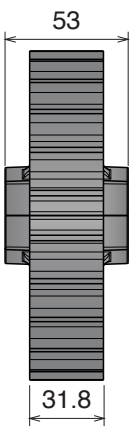

Improved Design and Performance

Materiale / *Material / Materialien:*
Poliammide/*Polyamide/Polyamid*
Viti: Acciaio inox/*Screws: Stainless steel/Schrauben: Edelstahl*
Dadi: ferro zincato/*Nuts: zinc plated steel/Mutter: verzinkter Stahl*

805-821

Ruota traino divisa, fresata
Split drive sprocket, machined / geteiltes Antriebskettenrad gefräst



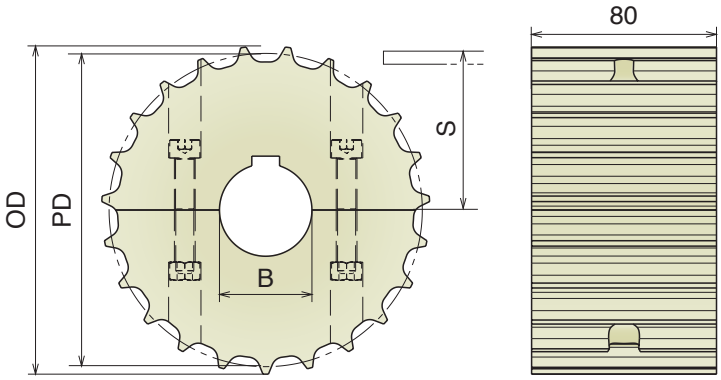

Part	Article-Nr.	Z-	Bore	PD	OD	S
521	52101	17	25	105,5	103,9	55,9
521	52102		30			
521	52103		35			
521	52104		40			
522	52201	19	25	117,3	117,0	61,9
522	52202		30			
522	52203		35			
522	52204		40			
523	52301	21	25	129,3	129,0	67,8
523	52302		30			
523	52303		35			
523	52304		40			
524	52401	23	25	141,2	142,0	73,8
524	52402		30			
524	52403		35			
524	52404		40			
525	52501	25	25	153,2	154,0	79,8
525	52502		30			
525	52503		35			
525	52504		40			
526	52601	27	25	165,2	166,8	85,8
526	52602		30			
526	52603		35			
526	52604		40			
527	52701	29	25	177,2	178,5	91,8
527	52702		30			
527	52703		35			
527	52704		40			

Ruota rinvio divisa, fresata
Split idler sprocket, machined / geteiltes Umlenkrad, gefräst



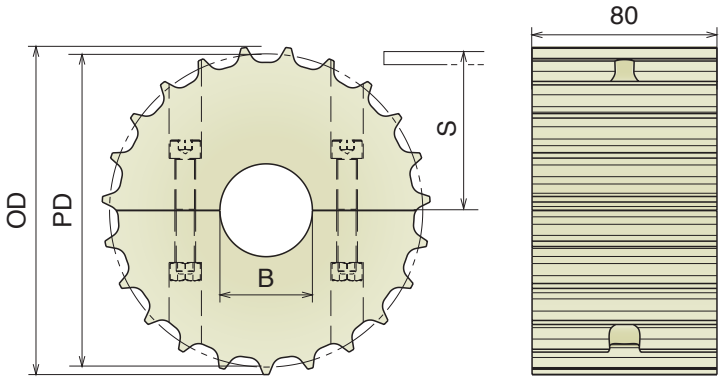

Part	Article-Nr.	Z-	Bore	PD	OD	S
521	52150	17	18*	105,5	103,9	55,9
521	52151		25			
521	52152		30			
521	52153		35			
521	52154		40			
522	52250	19	18*	117,3	117,0	61,9
522	52251		25			
522	52252		30			
522	52253		35			
522	52254		40			
523	52350	21	18*	129,3	129,0	67,8
523	52351		25			
523	52352		30			
523	52353		35			
523	52354		40			
524	52450	23	18*	141,2	142,0	73,8
524	52451		25			
524	52452		30			
524	52453		35			
524	52454		40			
525	52550	25	18*	153,2	154,0	79,8
525	52551		25			
525	52552		30			
525	52553		35			
525	52554		40			
526	52650	27	18*	165,2	166,8	85,8
526	52651		25			
526	52652		30			
526	52653		35			
526	52654		40			
527	52750	29	18*	177,2	178,5	91,8
527	52751		25			
527	52752		30			
527	52753		35			
527	52754		40			

*Plain Bore

8157 Ruota traino divisa, fresata
Split drive sprocket, machined / geteiltes Antriebskettenrad gefräst



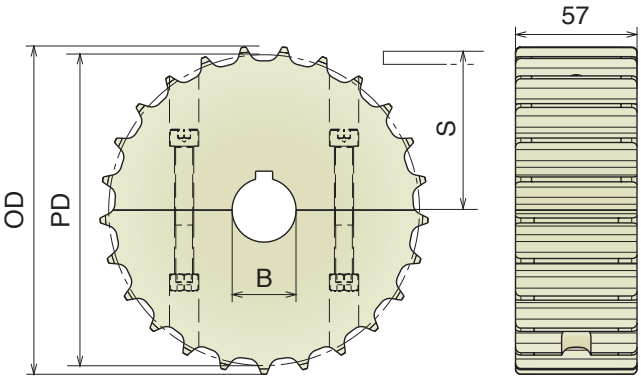

Part	Article-Nr.	Z-	Bore	PD	OD	S
528	52801	17	25	105,5	103,9	55,9
528	52802		30			
528	52803		35			
528	52804		40			
529	52901	19	25	117,3	117,0	61,9
529	52902		30			
529	52903		35			
529	52904		40			
530	53001	21	25	129,3	129,0	67,8
530	53002		30			
530	53003		35			
530	53004		40			
531	53101	23	25	141,2	142,0	73,8
531	53102		30			
531	53103		35			
531	53104		40			
532	53201	25	25	153,2	154,0	79,8
532	53202		30			
532	53203		35			
532	53204		40			
533	53301	27	25	165,2	166,8	85,8
533	53302		30			
533	53303		35			
533	53304		40			
534	53401	29	25	177,2	178,5	91,8
534	53402		30			
534	53403		35			
534	53404		40			

Ruota rinvio divisa, fresata
Split idler sprocket, machined / geteiltes Umlenkrad, gefräst



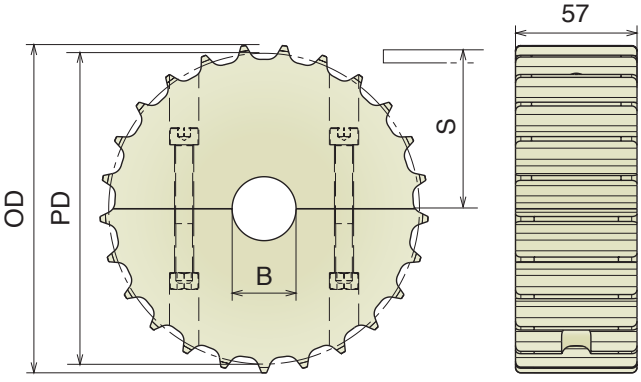

Part	Article-Nr.	Z-	Bore	PD	OD	S
528	52850	17	18*	105,5	103,9	55,9
528	52851		25			
528	52852		30			
528	52853		35			
528	52854		40			
529	52950	19	18*	117,3	117,0	61,9
529	52951		25			
529	52952		30			
529	52953		35			
529	52954		40			
530	53050	21	18*	129,3	129,0	67,8
530	53051		25			
530	53052		30			
530	53053		35			
530	53054		40			
531	53150	23	18*	141,2	142,0	73,8
531	53151		25			
531	53152		30			
531	53153		35			
531	53154		40			
532	53250	25	18*	153,2	154,0	79,8
532	53251		25			
532	53252		30			
532	53253		35			
532	53254		40			
533	53350	27	18*	165,2	166,8	85,8
533	53351		25			
533	53352		30			
533	53353		35			
533	53354		40			
534	53450	29	18*	177,2	178,5	91,8
534	53451		25			
534	53452		30			
534	53453		35			
534	53454		40			

*Plain Bore

Materiale / *Material / Materialien:*
Poliammide/*Polyamide/Polyamid*
Viti: Acciaio inox/*Screws: Stainless steel/Schrauben: Edelstahl*
Dadi: ferro zincato/*Nuts: zinc plated steel/Mutter: verzinkter Stahl*

820 Ruota traino divisa, fresata
Split drive sprocket, machined / geteiltes Antriebskettenrad gefräst



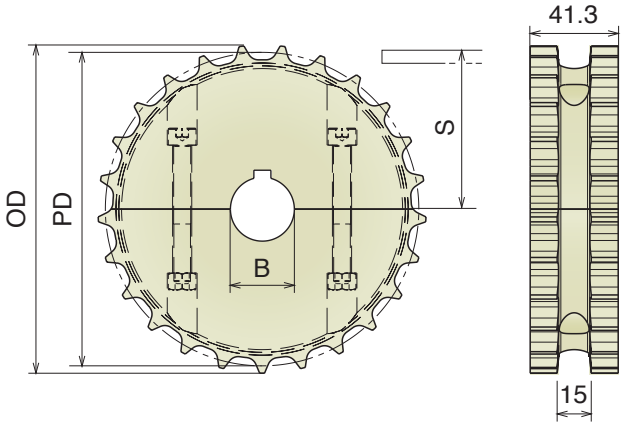

Part	Article-Nr.	Z-	Bore	PD	OD	S
535	53501	17	25	105,5	103,9	55,9
535	53502		30			
535	53503		35			
535	53504		40			
536	53601	19	25	117,3	117,0	61,9
536	53602		30			
536	53603		35			
536	53604		40			
537	53701	21	25	129,3	129,0	67,8
537	53702		30			
537	53703		35			
537	53704		40			
538	53801	23	25	141,2	142,0	73,8
538	53802		30			
538	53803		35			
538	53804		40			
539	53901	25	25	153,2	154,0	79,8
539	53902		30			
539	53903		35			
539	53904		40			
540	54001	27	25	165,2	166,8	85,8
540	54002		30			
540	54003		35			
540	54004		40			
541	54101	29	25	177,2	178,5	91,8
541	54102		30			
541	54103		35			
541	54104		40			

Ruota rinvio divisa, fresata
Split idler sprocket, machined / geteiltes Umlenkrad, gefräst



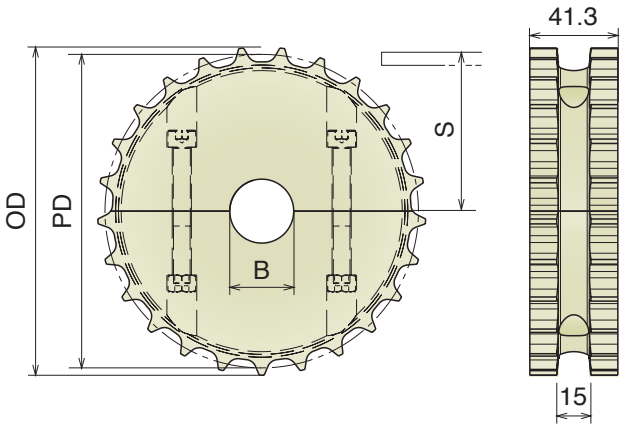

Part	Article-Nr.	Z-	Bore	PD	OD	S
535	53550	17	18*	105,5	103,9	55,9
535	53551		25			
535	53552		30			
535	53553		35			
535	53554		40			
536	53650	19	18*	117,3	117,0	61,9
536	53651		25			
536	53652		30			
536	53653		35			
536	53654		40			
537	53750	21	18*	129,3	129,0	67,8
537	53751		25			
537	53752		30			
537	53753		35			
537	53754		40			
538	53850	23	18*	141,2	142,0	73,8
538	53851		25			
538	53852		30			
538	53853		35			
538	53854		40			
539	53950	25	18*	153,2	154,0	79,8
539	53951		25			
539	53952		30			
539	53953		35			
539	53954		40			
540	54050	27	18*	165,2	166,8	85,8
540	54051		25			
540	54052		30			
540	54053		35			
540	54054		40			
541	54150	29	18*	177,2	178,5	91,8
541	54151		25			
541	54152		30			
541	54153		35			
541	54154		40			

*Plain Bore

Materiale / ***Material*** / ***Materialien:***
Poliammide rinforzato/Polyamide reinforced/Verstärktes Polyamid
Viti: Acciaio inox/*Screws: Stainless steel/Schrauben: Edelstahl*
Dadi: Ottone nichelato/*Nuts: Nickel plated brass/Mutter: Messing*

820 Ruota traino divisa, stampata
Split drive sprocket, molded / geteiltes Antriebskettenrad, gespritzt



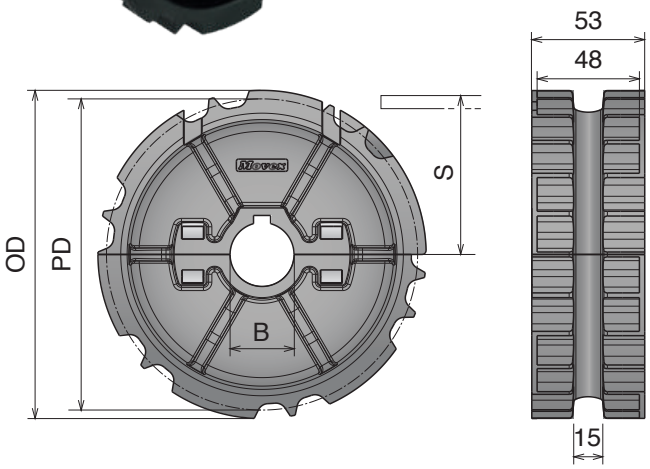

Part	Article-Nr.	Z-	Bore	PD	OD	S
542	54201	21	25	129,3	129,0	67,8
542	54202		30			
542	54203		35			
542	54204		40			
543	54301	23	25	141,2	142,0	73,8
543	54302		30			
543	54303		35			
543	54304		40			
544	54401	25	25	153,2	154,0	79,8
544	54402		30			
544	54403		35			
544	54404		40			

Improved Design and Performance

Ruota rinvio divisa, stampata
Split idler sprocket, molded / geteiltes Umlenkrad, gespritzt



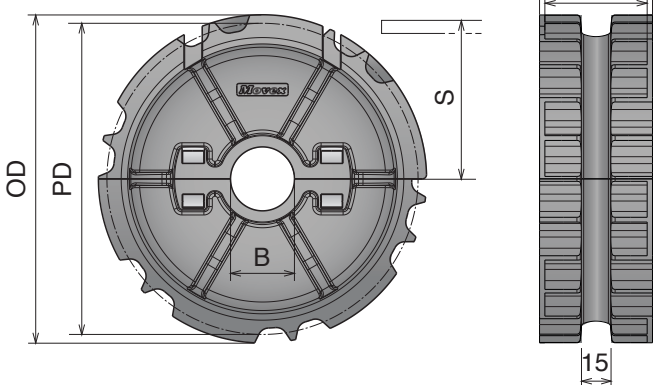

Part	Article-Nr.	Z-	Bore	PD	OD	S
542	54251	21	25	129,3	129,0	67,8
542	54252		30			
542	54253		35			
542	54254		40			
543	54351	23	25	141,2	142,0	73,8
543	54352		30			
543	54353		35			
543	54354		40			
544	54451	25	25	153,2	154,0	79,8
544	54452		30			
544	54453		35			
544	54454		40			

Improved Design and Performance

Materiale / *Material / Materialien:*
Poliammide/*Polyamide/Polyamid*
Viti: Acciaio inox/*Screws: Stainless steel/Schrauben: Edelstahl*
Dadi: ferro zincato/*Nuts: zinc plated steel/Mutter: verzinkter Stahl*

831 Ruota traino divisa, fresata
Split drive sprocket, machined / geteiltes Antriebskettenrad gefräst



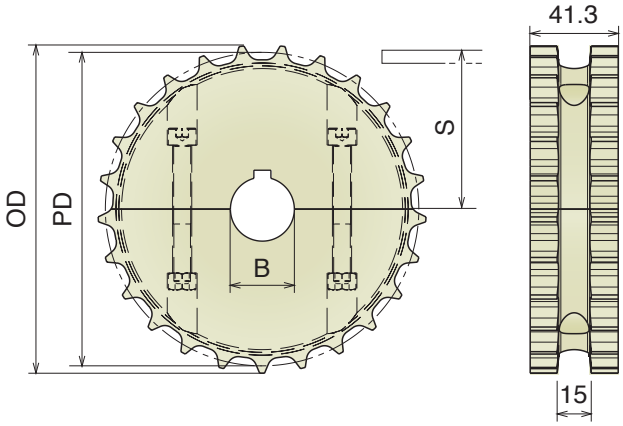

Part	Article-Nr.	Z-	Bore	PD	OD	S
535	53501	17	25	105,5	103,9	55,1
535	53502		30			
535	53503		35			
535	53504		40			
536	53601	19	25	117,3	117,0	61,1
536	53602		30			
536	53603		35			
536	53604		40			
537	53701	21	25	129,3	129,0	67,0
537	53702		30			
537	53703		35			
537	53704		40			
538	53801	23	25	141,2	142,0	73,0
538	53802		30			
538	53803		35			
538	53804		40			
539	53901	25	25	153,2	154,0	79,8
539	53902		30			
539	53903		35			
539	53904		40			
540	54001	27	25	165,2	166,8	85,0
540	54002		30			
540	54003		35			
540	54004		40			
541	54101	29	25	177,2	178,5	91,0
541	54102		30			
541	54103		35			
541	54104		40			

Ruota rinvio divisa, fresata
Split idler sprocket, machined / geteiltes Umlenkrad, gefräst



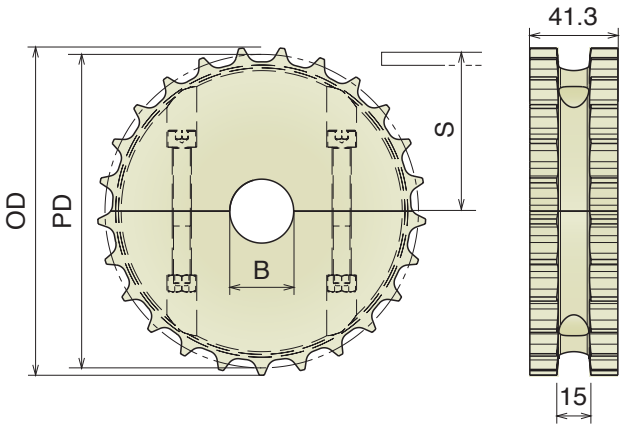

Part	Article-Nr.	Z-	Bore	PD	OD	S
535	53550	17	18*	105,5	103,9	55,1
535	53551		25			
535	53552		30			
535	53553		35			
535	53554		40			
536	53650	19	18*	117,3	117,0	61,1
536	53651		25			
536	53652		30			
536	53653		35			
536	53654		40			
537	53750	21	18*	129,3	129,0	67,0
537	53751		25			
537	53752		30			
537	53753		35			
537	53754		40			
538	53850	23	18*	141,2	142,0	73,0
538	53851		25			
538	53852		30			
538	53853		35			
538	53854		40			
539	53950	25	18*	153,2	154,0	79,0
539	53951		25			
539	53952		30			
539	53953		35			
539	53954		40			
540	54050	27	18*	165,2	166,8	85,0
540	54051		25			
540	54052		30			
540	54053		35			
540	54054		40			
541	54150	29	18*	177,2	178,5	91,0
541	54151		25			
541	54152		30			
541	54153		35			
541	54154		40			

*Plain Bore

Movex

Materiale / *Material / Materialien:*
Poliammide rinforzato/Polyamide reinforced/Verstärktes Polyamid
Viti: Acciaio inox/*Screws: Stainless steel/Schrauben: Edelstahl*
Dadi: Ottone nichelato/*Nuts: Nickel plated brass/Mutter: Messing*

831 Ruota traino divisa, stampata
Split drive sprocket, molded / geteiltes Antriebskettenrad, gespritzt

New



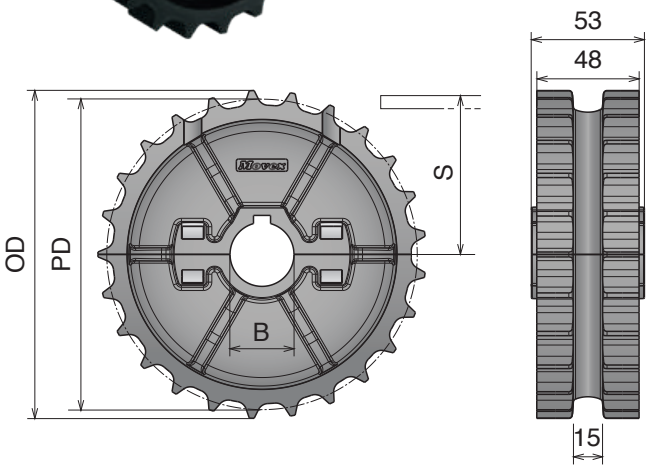

Part	Article-Nr.	Z-	Bore	PD	OD	S
542	54201-2L	21	25	129,3	129,0	67,0
542	54202-2L		30			
542	54203-2L		35			
542	54204-2L		40			
543	54301-2L	23	25	141,2	142,0	73,0
543	54302-2L		30			
543	54303-2L		35			
543	54304-2L		40			
544	54401-2L	25	25	153,2	154,0	79,0
544	54402-2L		30			
544	54403-2L		35			
544	54404-2L		40			

Improved Design and Performance

Ruota rinvio divisa, stampata
Split idler sprocket, molded / geteiltes Umlenkrad, gespritzt



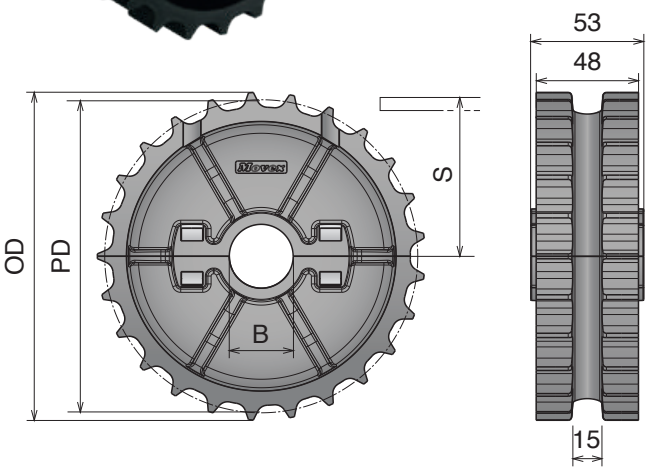

Part	Article-Nr.	Z-	Bore	PD	OD	S
542	54251-2L	21	25	129,3	129,0	67,0
542	54252-2L		30			
542	54253-2L		35			
542	54254-2L		40			
543	54351-2L	23	25	141,2	142,0	73,0
543	54352-2L		30			
543	54353-2L		35			
543	54354-2L		40			
544	54451-2L	25	25	153,2	154,0	79,0
544	54452-2L		30			
544	54453-2L		35			
544	54454-2L		40			

Improved Design and Performance

Materiale / *Material / Materialien:*
Poliammide/*Polyamide/Polyamid*
Viti: Acciaio inox/*Screws: Stainless steel/Schrauben: Edelstahl*
Dadi: ferro zincato/*Nuts: zinc plated steel/Mutter: verzinkter Stahl*

880 Ruota traino divisa, fresata
Split drive sprocket, machined / geteiltes Antriebskettenrad gefräst

Also suitable for Series 828 - 878 TAB - 879 M - 879 TAB - 888 - 888 GT



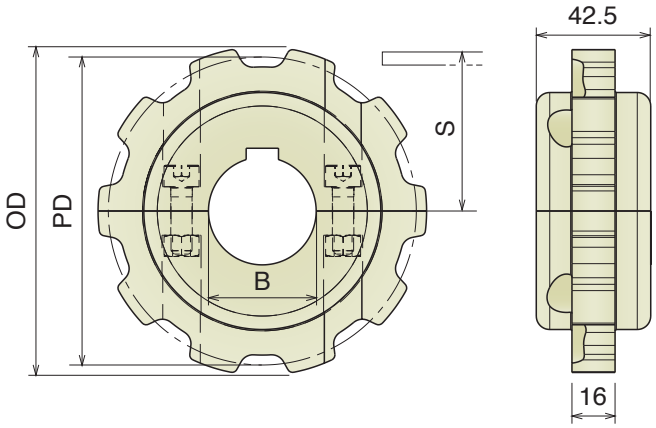

Part	Article-Nr.	Z-	Bore	PD	OD	S
545	54501	9	25	111,4	110,0	59,3
545	54502		30			
545	54503		35			
545	54504		40			
546	54601	10	25	123,3	122,0	65,25
546	54602		30			
546	54603		35			
546	54604		40			
547	54701	11	25	135,2	135,0	71,2
547	54702		30			
547	54703		35			
547	54704		40			
548	54801	12	25	147,2	147,3	77,2
548	54802		30			
548	54803		35			
548	54804		40			

Ruota rinvio divisa, fresata
Split idler sprocket, machined / geteiltes Umlenkrad, gefräst



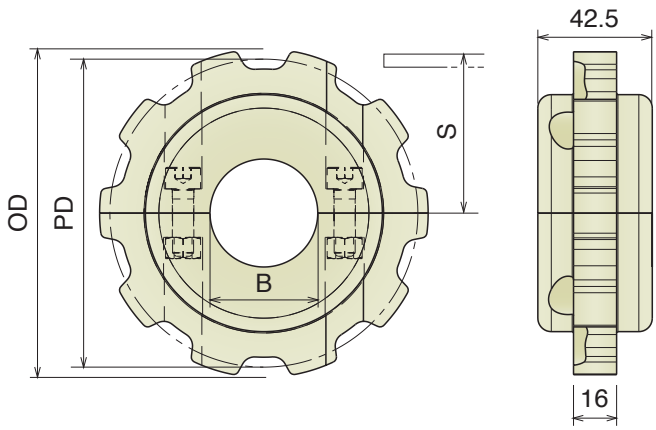

Part	Article-Nr.	Z-	Bore	PD	OD	S
545	54550	9	18*	111,4	110,0	59,3
545	54551		25			
545	54552		30			
545	54553		35			
545	54554		40			
546	54650	10	18*	123,3	122,0	65,25
546	54651		25			
546	54652		30			
546	54653		35			
546	54654		40			
547	54750	11	18*	135,2	135,0	71,2
547	54751		25			
547	54752		30			
547	54753		35			
547	54754		40			
548	54850	12	18*	147,2	147,3	77,2
548	54851		25			
548	54852		30			
548	54853		35			
548	54854		40			

*Plain Bore

Materiale / ***Material / Materialien:***
Poliammide rinforzato/Polyamide reinforced/Verstärktes Polyamid
Viti: Acciaio inox/*Screws: Stainless steel/Schrauben: Edelstahl*
Dadi: Ottone nichelato/*Nuts: Nickel plated brass/Mutter: Messing*

880 Ruota traino divisa, stampata
Split drive sprocket, molded / geteiltes Antriebskettenrad, gespritzt

Also suitable for Series 828 - 878 TAB - 879 M - 879 TAB - 888 - 888 GT

Part	Article-Nr.	Z-	Bore	PD	OD	S
549	54901	10	25	123,3	122,0	65,25
549	54902		30			
549	54903		35			
549	54904		40			
550	55001	12	25	147,2	147,3	77,2
550	55002		30			
550	55003		35			
550	55004		40			

Improved Design and Performance



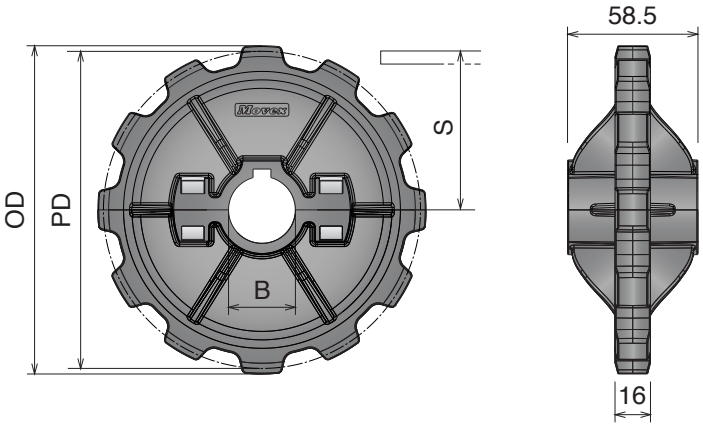

Ruota rinvio divisa, stampata
Split idler sprocket, molded / geteiltes Umlenkrad, gespritzt

Part	Article-Nr.	Z-	Bore	PD	OD	S
549	54951	10	25	123,3	122,0	65,25
549	54952		30			
549	54953		35			
549	54954		40			
550	55051	12	25	147,2	147,3	77,2
550	55052		30			
550	55053		35			
550	55054		40			

Improved Design and Performance



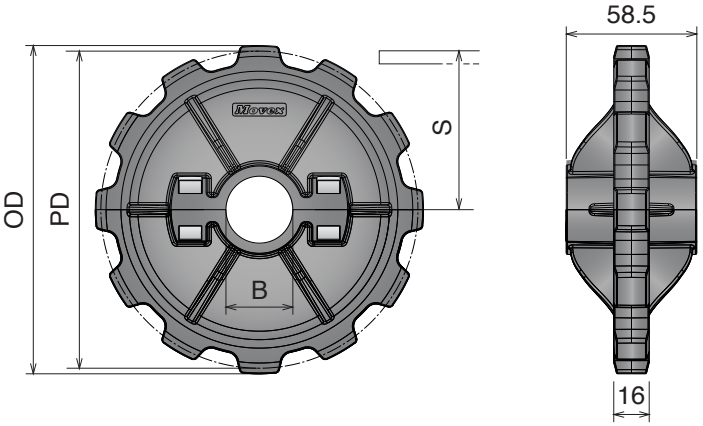

Materiale / *Material / Materialien:*
Poliammide/*Polyamide/Polyamid*
Viti: Acciaio inox/*Screws: Stainless steel/Schrauben: Edelstahl*
Dadi: ferro zincato/*Nuts: zinc plated steel/Mutter: verzinkter Stahl*

882 Ruota traino divisa, fresata
Split drive sprocket, machined / geteiltes Antriebskettenrad gefräst

Also suitable for Series 8257



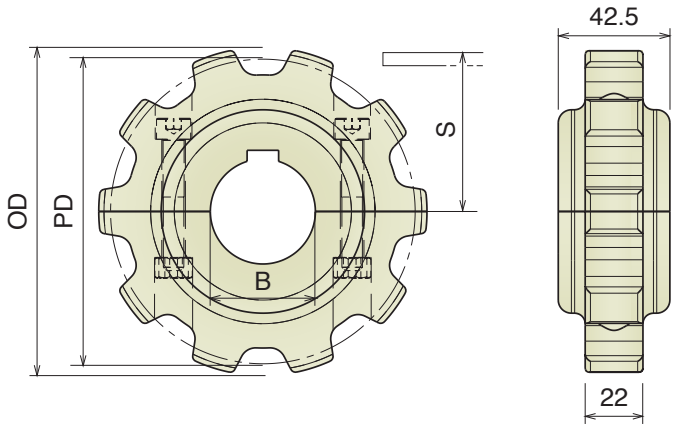

Part	Article-Nr.	Z-	Bore	PD	OD	S
551	55101	9	25	111,4	112,0	60,5
551	55102		30			
551	55103		35			
551	55104		40			
552	55201	10	25	123,2	125,0	66,4
552	55202		30			
552	55203		35			
552	55204		40			
553	55301	11	25	135,2	137,0	72,4
553	55302		30			
553	55303		35			
553	55304		40			
554	55401	12	25	147,2	149,0	78,4
554	55402		30			
554	55403		35			
554	55404		40			

Ruota rinvio divisa, fresata
Split idler sprocket, machined / geteiltes Umlenkrad, gefräst



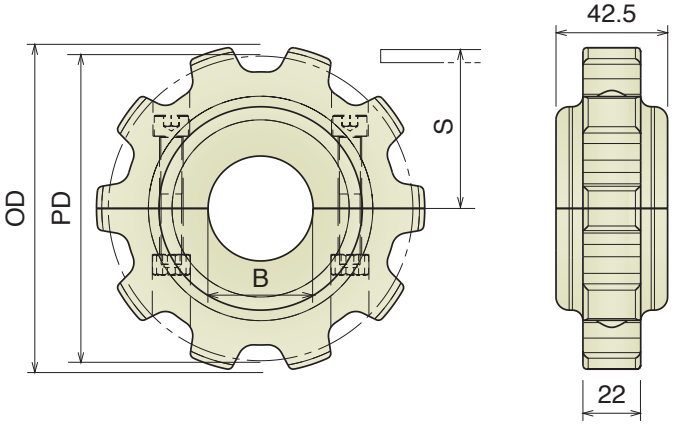

Part	Article-Nr.	Z-	Bore	PD	OD	S
551	55150	9	18*	111,4	112,0	60,5
551	55151		25			
551	55152		30			
551	55153		35			
551	55154		40			
552	55250	10	18*	123,2	125,0	66,4
552	55251		25			
552	55252		30			
552	55253		35			
552	55254		40			
553	55350	11	18*	135,2	137,0	72,4
553	55351		25			
553	55352		30			
553	55353		35			
553	55354		40			
554	55450	12	18*	147,2	149,0	78,4
554	55451		25			
554	55452		30			
554	55453		35			
554	55454		40			

*Plain Bore

Materiale / *Material / Materialien:*
Poliammide rinforzato/Polyamide reinforced/Verstärktes Polyamid
Viti: Acciaio inox/*Screws: Stainless steel/Schrauben: Edelstahl*
Dadi: Ottone nichelato/*Nuts: Nickel plated brass/Mutter: Messing*

882 Ruota traino divisa, stampata
Split drive sprocket, molded / geteiltes Antriebskettenrad, gespritzt

Also suitable for Series 8257

Part	Article-Nr.	Z-	Bore	PD	OD	S
555	55501	10	25	123,2	125,0	66,4
555	55502		30			
555	55503		35			
555	55504		40			
556	55601	12	25	147,2	149,0	78,4
556	55602		30			
556	55603		35			
556	55604		40			



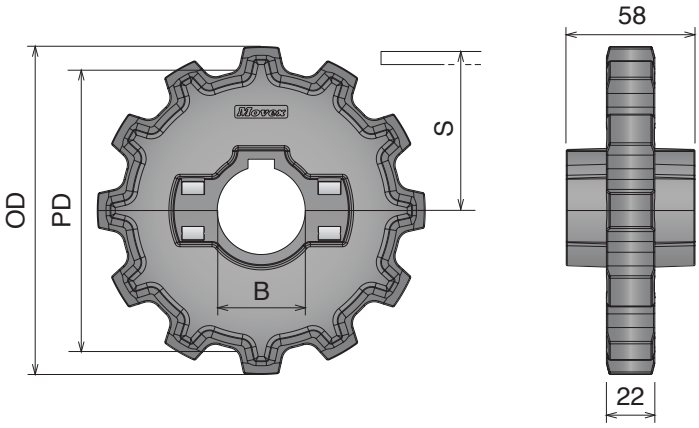

Ruota rinvio divisa, stampata
Split idler sprocket, molded / geteiltes Umlenkrad, gespritzt

Part	Article-Nr.	Z-	Bore	PD	OD	S
555	55551	10	25	123,2	125,0	66,4
555	55552		30			
555	55553		35			
555	55554		40			
556	55651	12	25	147,2	149,0	78,4
556	55652		30			
556	55653		35			
556	55654		40			



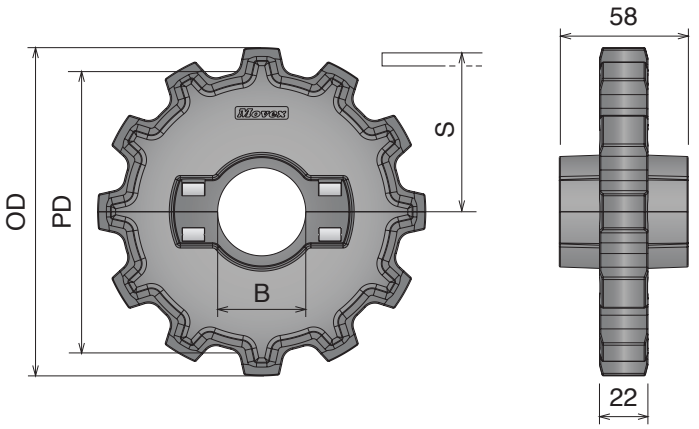

Materiale / *Material / Materialien:*
Poliammide/*Polyamide/Polyamid*
Viti: Acciaio inox/*Screws: Stainless steel/Schrauben: Edelstahl*
Dadi: ferro zincato/*Nuts: zinc plated steel/Mutter: verzinkter Stahl*

512 Ruota traino divisa, fresata
Split drive sprocket, machined / geteiltes Antriebskettenrad gefräst



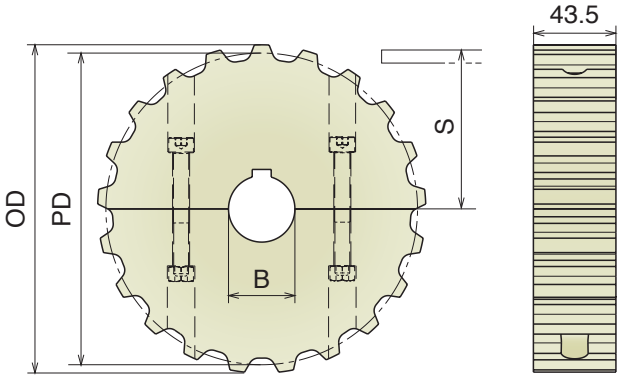

Part	Article-Nr.	Z-	Bore	PD	OD	S
557	55701	13	25	108,0	106,1	57,2
557	55702		30			
557	55703		35			
557	55704		40			
558	55801	15	25	124,0	122,2	65,2
558	55802		30			
558	55803		35			
558	55804		40			
559	55901	17	25	138,2	138,2	72,3
559	55902		30			
559	55903		35			
559	55904		40			
560	56001	18	25	146,3	146,4	76,4
560	56002		30			
560	56003		35			
560	56004		40			
561	56101	19	25	154,3	155,7	80,4
561	56102		30			
561	56103		35			
561	56104		40			
562	56201	21	25	170,4	173,0	88,4
562	56202		30			
562	56203		35			
562	56204		40			
563	56301	23	25	186,5	190,0	96,5
563	56302		30			
563	56303		35			
563	56304		40			
564	56401	25	25	202,7	204,0	104,6
564	56402		30			
564	56403		35			
564	56404		40			

Ruota rinvio divisa, fresata
Split idler sprocket, machined / geteiltes Umlenkrad, gefräst



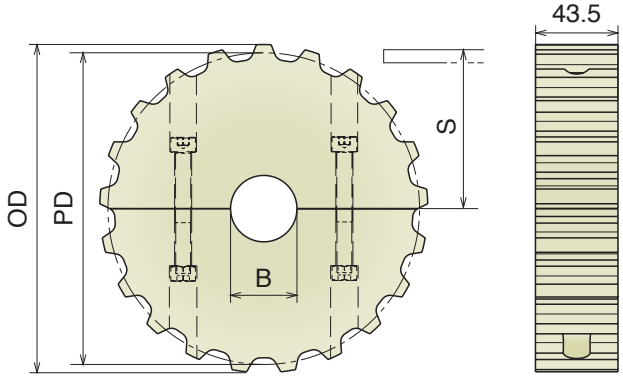

Part	Article-Nr.	Z-	Bore	PD	OD	S
557	55750	13	18*	108,0	106,1	57,2
557	55751		25			
557	55752		30			
557	55753		35			
557	55754		40			
558	55850	15	18*	124,0	122,2	65,2
558	55851		25			
558	55852		30			
558	55853		35			
558	55854		40			
559	55950	17	18*	138,2	138,2	72,3
559	55951		25			
559	55952		30			
559	55953		35			
559	55954		40			
560	56050	18	18*	146,3	146,4	76,4
560	56051		25			
560	56052		30			
560	56053		35			
560	56054		40			
561	56150	19	18*	154,3	155,7	80,4
561	56151		25			
561	56152		30			
561	56153		35			
561	56154		40			
562	56250	21	18*	170,4	173,0	88,4
562	56251		25			
562	56252		30			
562	56253		35			
562	56254		40			
563	56350	23	18*	186,5	190,0	96,5
563	56351		25			
563	56352		30			
563	56353		35			
563	56354		40			
564	56450	25	18*	202,7	204,0	104,6
564	56451		25			
564	56452		30			
564	56453		35			
564	56454		40			

*Plain Bore

815 Ruota flangiata divisa, fresata
Split sprocket with guides, machined / Geteiltes Kettenrad mit Bordscheibe, gefräst

Anelli Inox / SS Guide-rings / Edelstahl Bordscheibe

Part	Article-Nr.	Z-	Bore	PD	OD	S	Ø screw
503	50301G	21	25	129,3	129,0	67,8	104,0
503	50302G		30				
503	50303G		35				
503	50304G		40				
504	50401G	23	25	141,2	142,0	73,8	116,0
504	50402G		30				
504	50403G		35				
504	50404G		40				
505	50501G	25	25	153,2	154,0	79,8	128,0
505	50502G		30				
505	50503G		35				
505	50504G		40				



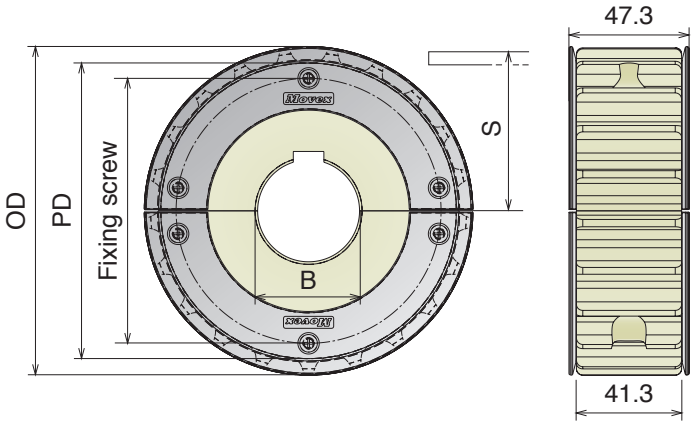

8157 Ruota flangiata divisa, fresata
Split sprocket with guides, machined / Geteiltes Kettenrad mit Bordscheibe, gefräst

Anelli Inox / SS Guide-rings / Edelstahl Bordscheibe

Part	Article-Nr.	Z-	Bore	PD	OD	S	Ø screw
530	53001G	21	25	129,3	129,0	67,8	104,0
530	53002G		30				
530	53003G		35				
530	53004G		40				
531	53101G	23	25	141,2	142,0	73,8	116,0
531	53102G		30				
531	53103G		35				
531	53104G		40				
532	53201G	25	25	153,2	154,0	79,8	128,0
532	53202G		30				
532	53203G		35				
532	53204G		40				



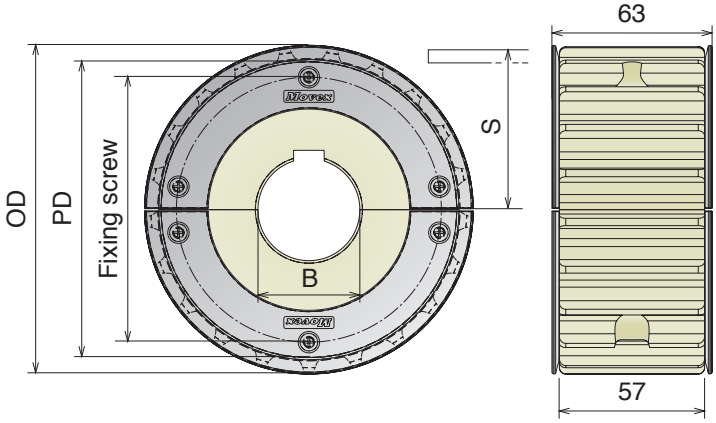

Materiale / *Material / Materialien:*
Poliammide/*Polyamide/Polyamid*
Viti: Acciaio inox/*Screws: Stainless steel/Schrauben: Edelstahl*
Dadi: ferro zincato/*Nuts: zinc plated steel/Mutter: verzinkter Stahl*

805

Ruota flangiata divisa, fresata
Split sprocket with guides, machined / Geteiltes Kettenrad mit Bordscheibe, gefräst

Anelli Inox / SS Guide-rings / Edelstahl Bordscheibe

Part	Article-Nr.	Z-	Bore	PD	OD	S	Ø screw
523	52301G	21	25	129,3	129,0	67,8	104,0
523	52302G		30				
523	52303G		35				
523	52304G		40				
524	52401G	23	25	141,2	142,0	73,8	116,0
524	52402G		30				
524	52403G		35				
524	52404G		40				
525	52501G	25	25	153,2	154,0	79,8	128,0
525	52502G		30				
525	52503G		35				
525	52504G		40				



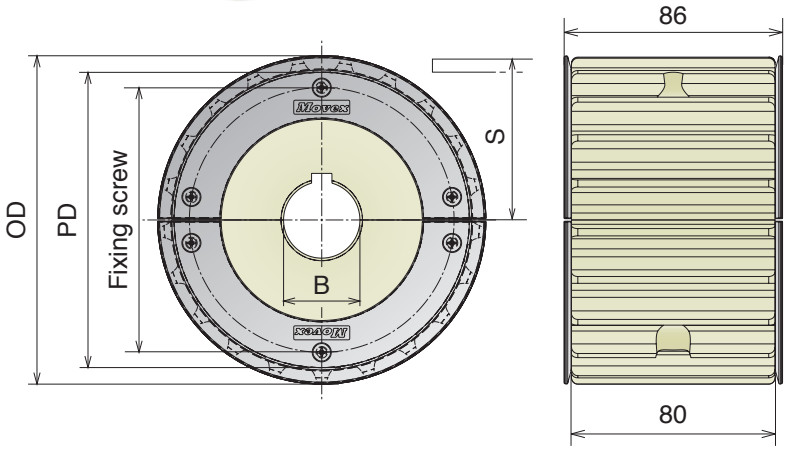

820

Ruota flangiata divisa, fresata
Split sprocket with guides, machined / Geteiltes Kettenrad mit Bordscheibe, gefräst

Anelli Inox / SS Guide-rings / Edelstahl Bordscheibe

Part	Article-Nr.	Z-	Bore	PD	OD	S	Ø screw
537	53701G	21	25	129,3	129,0	67,8	104,0
537	53702G		30				
537	53703G		35				
537	53704G		40				
538	53801G	23	25	141,2	142,0	73,8	116,0
538	53802G		30				
538	53803G		35				
538	53804G		40				
539	53901G	25	25	153,2	154,0	79,8	128,0
539	53902G		30				
539	53903G		35				
539	53904G		40				



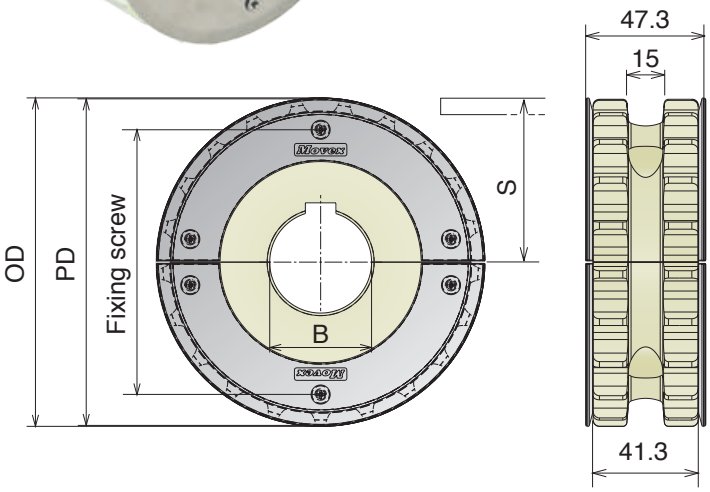

Materiale / *Material / Materialien:*
Poliammide/*Polyamide/Polyamid*
Viti: Acciaio inox/*Screws: Stainless steel/Schrauben: Edelstahl*
Dadi: ferro zincato/*Nuts: zinc plated steel/Mutter: verzinkter Stahl*

512 Ruota flangiata divisa, fresata
Split sprocket with guides, machined / Geteiltes Kettenrad mit Bordscheibe, gefräst

Anelli Inox / SS Guide-rings / Edelstahl Bordscheibe

Part	Article-Nr.	Z-	Bore	PD	OD	S	Ø screw
576	57601G	18	25	146,3	147,0	76,4	110,0
576	57602G		30				
576	57603G		35				
576	57604G		40				



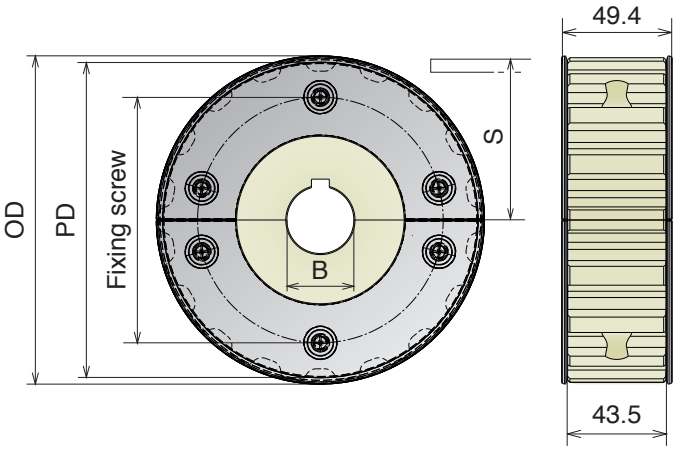

Materiale / *Material / Materialien:*
Poliammide/*Polyamide/Polyamid*
Viti: Acciaio inox/*Screws: Stainless steel/Schrauben: Edelstahl*
Dadi: ferro zincato/*Nuts: zinc plated steel/Mutter: verzinkter Stahl*

815 MINI

Ruota traino divisa, fresata
Split drive sprocket, machined / geteiltes Antriebskettenrad gefräst



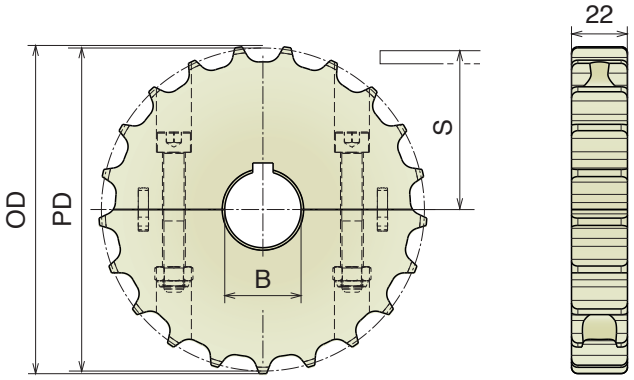

Part	Article-Nr.	Z-	Bore	PD	OD	S
580	58001	19	25	117,3	117,0	61,9
580	58002		30			
580	58003		35			
580	58004		40			
581	58101	21	25	129,3	129,0	67,8
581	58102		30			
581	58103		35			
581	58104		40			
582	58201	23	25	141,2	142,0	73,8
582	58202		30			
582	58203		35			
582	58204		40			
583	58301	25	25	153,2	154,0	79,8
583	58302		30			
583	58303		35			
583	58304		40			

Ruota rinvio divisa, fresata
Split idler sprocket, machined / geteiltes Umlenkrad, gefräst



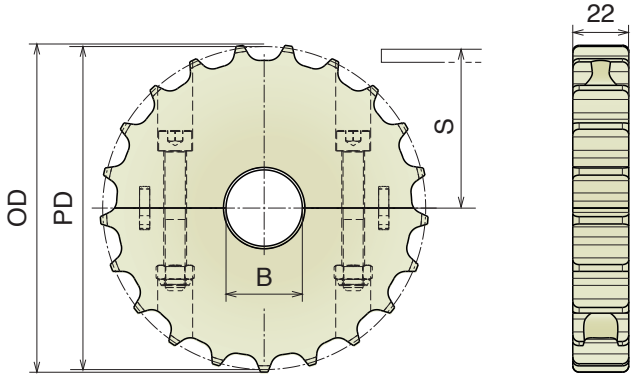

Part	Article-Nr.	Z-	Bore	PD	OD	S
580	58050	19	18*	117,3	117,0	61,9
580	58051		25			
580	58052		30			
580	58053		35			
580	58054		40			
581	58150	21	18*	129,3	129,0	67,8
581	58151		25			
581	58152		30			
581	58153		35			
581	58154		40			
582	58250	23	18*	141,2	142,0	73,8
582	58251		25			
582	58252		30			
582	58253		35			
582	58254		40			
583	58350	25	18*	153,2	154,0	79,8
583	58351		25			
583	58352		30			
583	58353		35			
583	58354		40			

*Plain Bore

CC 600

Ruota rinvio divisa, fresata
Split idler sprocket, machined / geteiltes Umlenkrad, gefräst

For adequate quantities these sprockets can be delivered with finished bore.

Part	Article-Nr.	Z-	Bore	PD	OD
565	56550	8	20	166,0	172,0
566	56650	10	20	205,0	215,0
567	56750	12	20	246,0	256,0
568	56850	14	20	286,0	297,0



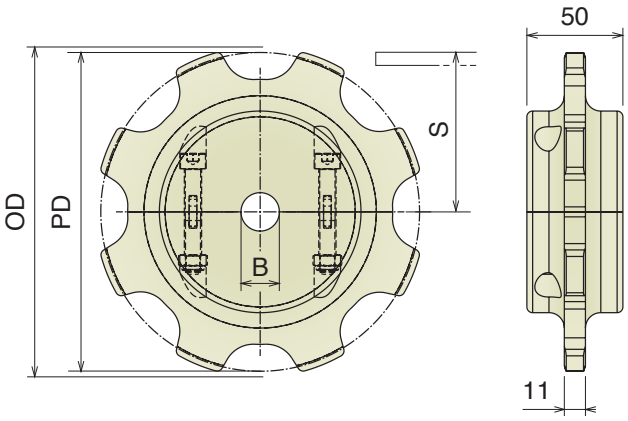

CC 1400

Ruota rinvio, fresata
Idler sprocket, machined / Umlenkrad, gefräst

For adequate quantities these sprockets can be delivered with finished bore.

Part	Article-Nr.	Z-	Bore	PD	OD
570	57050E	7	20	190,0	202,0
571	57150E	8	20	218,0	227,6
572	57250E	10	20	267,0	279,0



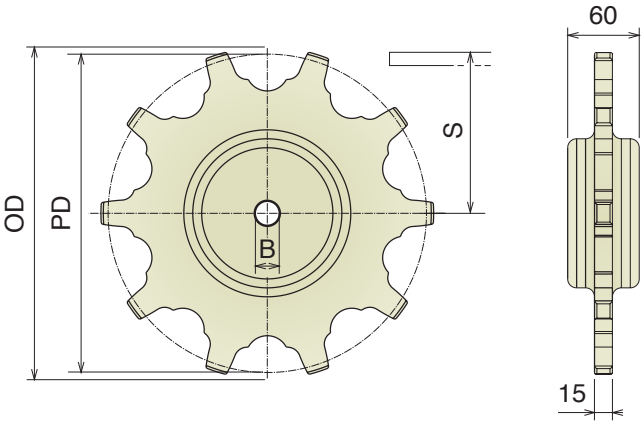

Materiale / *Material / Materialien:*
Poliammide/*Polyamide/Polyamid*
Viti: Acciaio inox/*Screws: Stainless steel/Schrauben: Edelstahl*
Dadi: ferro zincato/*Nuts: zinc plated steel/Mutter: verzinkter Stahl*

1701-1706-765 NO GAP

Ruota traino divisa, fresata
Split drive sprocket, machined / geteiltes Antriebskettenrad gefräst



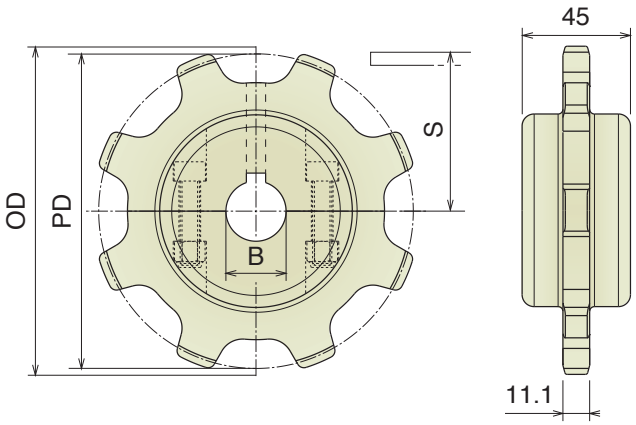

Part	Article-Nr.	Z-	Bore	PD	OD	S
573	57301	8	25	130,7	136,3	53,0
573	57302		30			
573	57303		35			
573	57304		40			
574	57401	10	25	161,8	165,1	69,0
574	57402		30			
574	57403		35			
574	57404		40			
575	57501	13	25	208,9	215,0	93,5
575	57502		30			
575	57503		35			
575	57504		40			

Ruota rinvio divisa, fresata
Split idler sprocket, machined / geteiltes Umlenkrad, gefräst



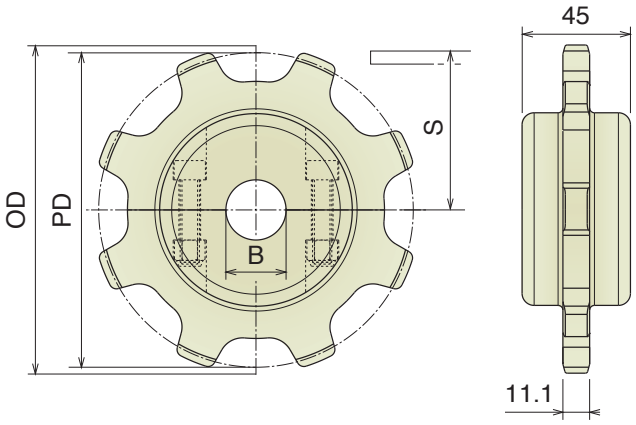

Part	Article-Nr.	Z-	Bore	PD	OD	S
573	57350	8	18*	130,7	136,3	53,0
573	57351		25			
573	57352		30			
573	57353		35			
573	57354		40			
574	57450	10	18*	161,8	165,1	69,0
574	57451		25			
574	57452		30			
574	57453		35			
574	57454		40			
575	57550	13	18*	208,9	215,0	93,5
575	57551		25			
575	57552		30			
575	57553		35			
575	57554		40			

*Plain Bore

43 MF-63 MF

Ruota traino, stampata
Drive sprocket, molded / Antriebskettenrad, gespritzt

Part	Article-Nr.	Z-	Bore	PD	OD
586	58600	11	20	90,2	94,5



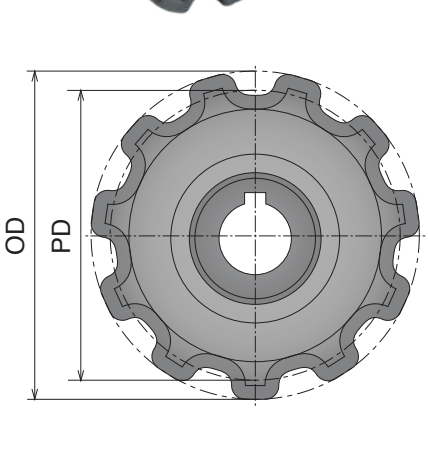

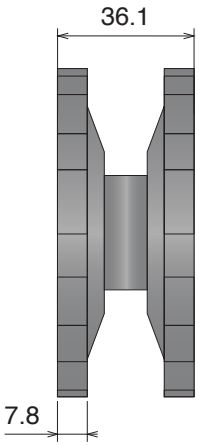

103 MF

Ruota traino, stampata
Drive sprocket, molded / Antriebskettenrad, gespritzt

Part	Article-Nr.	Z-	Bore	PD	OD
587	58701	12	25	129,4	144,5



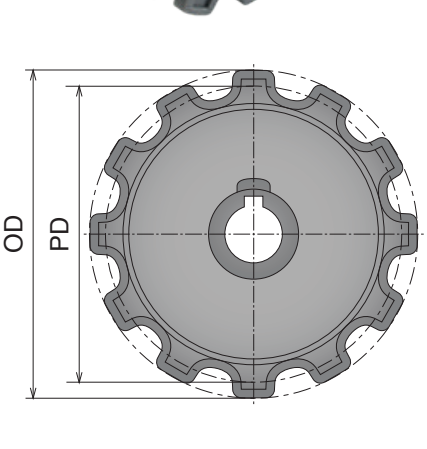

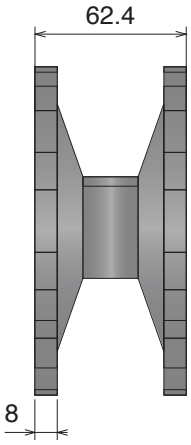

Materiale / *Material / Materialien:*
Poliammide/*Polyamide/Polyamid*
Viti: Acciaio inox/*Screws: Stainless steel/Schrauben: Edelstahl*
Dadi: ferro zincato/*Nuts: zinc plated steel/Mutter: verzinkter Stahl*

83 MF

Ruota traino divisa, fresata
Split drive sprocket, machined / geteiltes Antriebskettenrad gefräst

New

Part	Article-Nr.	Z-	Bore	PD	OD	S
589	58901	9	25	97,9	108,0	68,5
589	58902		30			
589	58903		35			
589	58904		40			
588	58801	12	25	129,4	140,0	85,15
588	58802		30			
588	58803		35			
588	58804		40			



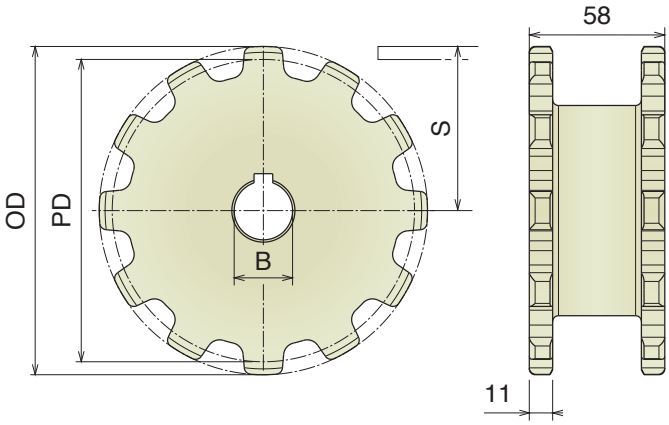

Ruota rinvio divisa, fresata
Split idler sprocket, machined / geteiltes Umlenkrad, gefräst

Part	Article-Nr.	Z-	Bore	PD	OD	S
589	58950	9	18*	97,9	108	68,5
589	58951		25			
589	58952		30			
589	58953		35			
589	58954		40			
588	58850	12	18*	129,4	140,0	85,15
588	58851		25			
588	58852		30			
588	58853		35			
588	58854		40			

*Plain Bore



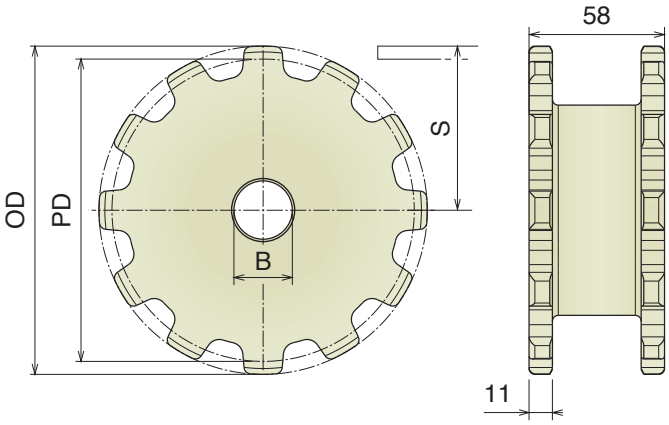

Materiale / *Material / Materialien:*
Poliammide/*Polyamide/Polyamid*
Viti: Acciaio inox/*Screws: Stainless steel/Schrauben: Edelstahl*
Dadi: ferro zincato/*Nuts: zinc plated steel/Mutter: verzinkter Stahl*

83 M-83 M/PU-140 M

Ruota traino divisa, fresata
Split drive sprocket, machined / geteiltes Antriebskettenrad gefräst

Part	Article-Nr.	Z-	Bore	PD	OD	S
590	59001	9	25	111,4	108,0	66,79
590	59002		30			
590	59003		35			
590	59004		40			
591	59101	12	25	147,2	145,3	84,32
591	59102		30			
591	59103		35			
591	59104		40			



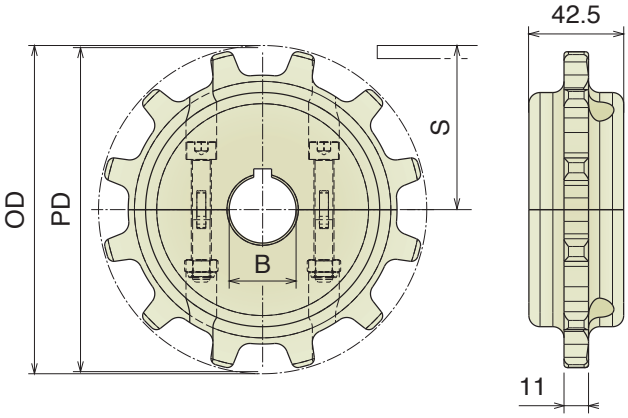

Ruota rinvio divisa, fresata
Split idler sprocket, machined / geteiltes Umlenkrad, gefräst

Part	Article-Nr.	Z-	Bore	PD	OD	S
590	59050	9	18*	111,4	108,0	66,79
590	59051		25			
590	59052		30			
590	59053		35			
590	59054		40			
591	59150	12	18*	147,2	145,3	84,32
591	59151		25			
591	59152		30			
591	59153		35			
591	59154		40			

*Plain Bore



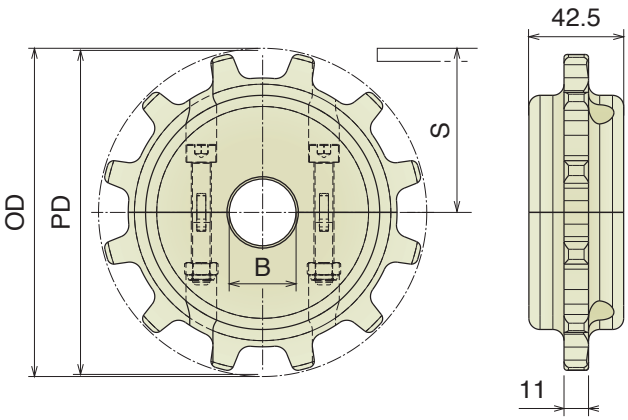

Materiale / *Material / Materialien:*
Poliammide/*Polyamide/Polyamid*
Viti: Acciaio inox/*Screws: Stainless steel/Schrauben: Edelstahl*
Dadi: ferro zincato/*Nuts: zinc plated steel/Mutter: verzinkter Stahl*

Turning Disk

Disco di ritorno
Turning disk / Umlenkscheibe

Suitable for 43 MF-63 MF-83 MF-103 MF | 83 M-103 M | 83 M/PU

Part	Article-Nr.	Ø
170	170000	278





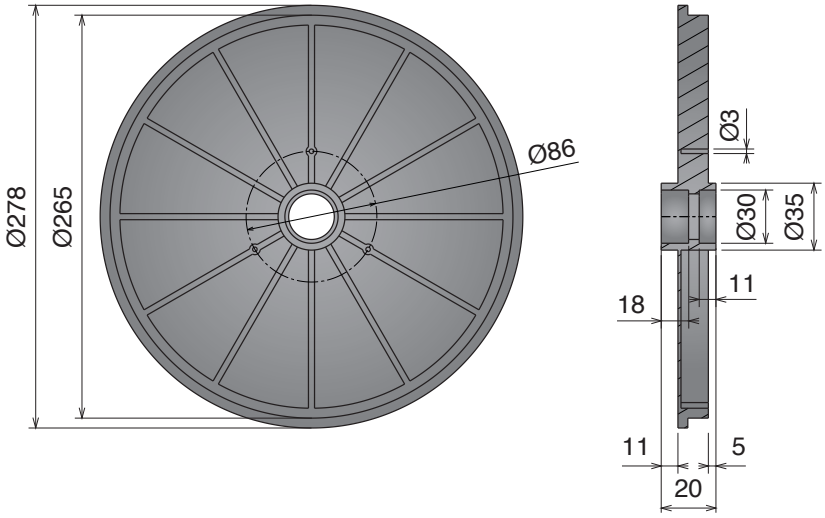

107



Chain idler wheels

815



Pag 108

815



Pag 108

805



Pag 109

821



Pag 109

881 TAB



Pag 110

882 M



Pag 110

Info Material:

pg. 529

Materiale / *Material* / *Materialien:*
Poliammide/*Polyamide/Polyamid*
Viti: Acciaio inox/*Screws: Stainless steel/Schrauben: Edelstahl*
Dadi: ferro zincato/*Nuts: zinc plated steel/Mutter: verzinkter Stahl*
Dadi: ottone nichelato per stampate/Nuts: nickel plated brass for molded/Mutter: Messing vernickelt für gespritzt Version

815 Ruota rinvio liscia, divisa, fresata
Split idler wheel, machined / geteilte Umlenkrolle, gefräst

Also suitable for Series 881 M - 820 - 831 - 828 - 879 M - 880 M



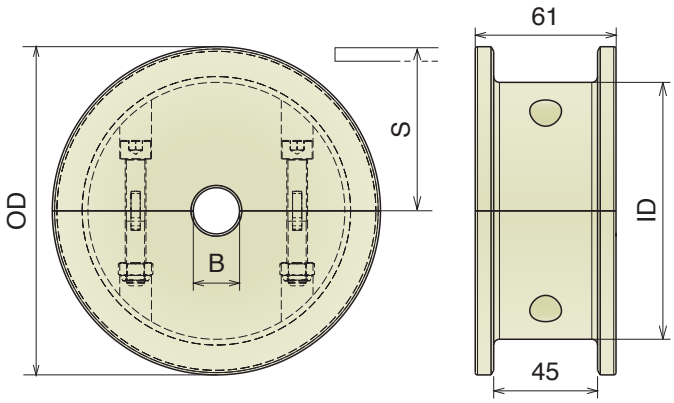

Part	Article-Nr.	ecq. Z-	Bore	OD	ID	S
601	60100	17	20	104,0	75,2	56,2
601	60101		25			
601	60102		30			
601	60103		35			
601	60104		40			
602	60200	19	20	117,0	92,2	62,6
602	60201		25			
602	60202		30			
602	60203		35			
602	60204		40			
603	60300	21	20	129,8	105,0	68,6
603	60301		25			
603	60302		30			
603	60303		35			
603	60304		40			
604	60400	23	20	142,2	111,3	74,6
604	60401		25			
604	60402		30			
604	60403		35			
604	60404		40			
605	60500	25	20	154,7	124,7	80,5
605	60501		25			
605	60502		30			
605	60503		35			
605	60504		40			
606	60600	27	20	167,2	135,0	88,5
606	60601		25			
606	60602		30			
606	60603		35			
606	60604		40			
607	60700	29	20	179,3	140,0	92,8
607	60701		25			
607	60702		30			
607	60703		35			
607	60704		40			

815 Ruota rinvio liscia, divisa, stampata
Split idler wheel, molded / geteilte Umlenkrolle, gespritzt

Also suitable for Series 881 M - 820 - 831 - 828 - 879 M - 880 - 880 M



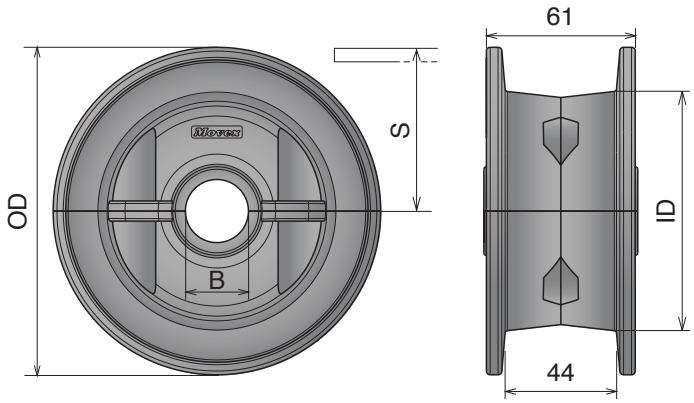

Part	Article-Nr.	ecq. Z-	Bore	OD	ID	S
608	60801	21	25	129,8	94,8	68,6
608	60802		30			
608	60803		35			
608	60804		40			
609	60901	23	25	142,2	99,3	74,6
609	60902		30			
609	60903		35			
609	60904		40			
610	61001	25	25	154,7	102,0	80,5
610	61002		30			
610	61003		35			
610	61004		40			

Materiale / ***Material*** / ***Materialien:***
Poliammide/*Polyamide/Polyamid*
Viti: Acciaio inox/*Screws: Stainless steel/Schrauben: Edelstahl*
Dadi: ferro zincato/*Nuts: zinc plated steel/Mutter: verzinkter Stahl*

805

Ruota rinvio liscia, divisa, fresata
Split idler wheel, machined / geteilte Umlenkrolle, gefräst



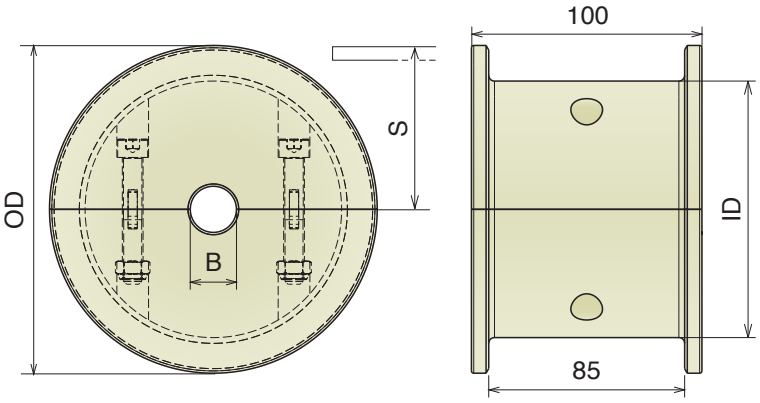

Part	Article-Nr.	ecq. Z-	Bore	OD	ID	S
611	61100	17	20	104,0	75,2	56,2
611	61101		25			
611	61102		30			
611	61103		35			
611	61104		40			
612	61200	19	20	117,0	92,2	62,6
612	61201		25			
612	61202		30			
612	61203		35			
612	61204		40			
613	61300	21	20	129,8	105,0	68,6
613	61301		25			
613	61302		30			
613	61303		35			
613	61304		40			
614	61400	23	20	142,2	111,3	74,6
614	61401		25			
614	61402		30			
614	61403		35			
614	61404		40			
615	61500	25	20	154,7	124,7	80,5
615	61501		25			
615	61502		30			
615	61503		35			
615	61504		40			
616	61600	27	20	167,2	135,0	88,5
616	61601		25			
616	61602		30			
616	61603		35			
616	61604		40			
617	61700	29	20	179,3	140,0	92,8
617	61701		25			
617	61702		30			
617	61703		35			
617	61704		40			

821

Ruota rinvio liscia, divisa, fresata
Split idler wheel, machined / geteilte Umlenkrolle, gefräst



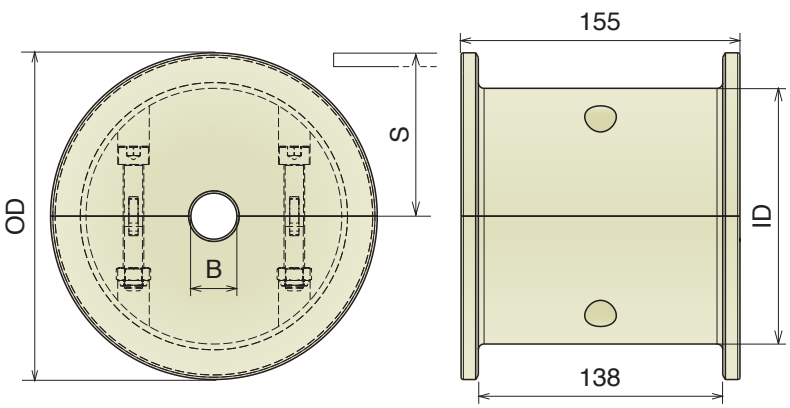

Part	Article-Nr.	ecq. Z-	Bore	OD	ID	S
625	62500	19	20	117,0	92,2	62,6
625	62501		25			
625	62502		30			
625	62503		35			
625	62504		40			
626	62600	21	20	129,8	105,0	68,6
626	62601		25			
626	62602		30			
626	62603		35			
626	62604		40			
627	62700	23	20	142,2	111,3	74,6
627	62701		25			
627	62702		30			
627	62703		35			
627	62704		40			
628	62800	25	20	154,7	124,7	80,5
628	62801		25			
628	62802		30			
628	62803		35			
628	62804		40			

881 TAB-882 M

Ruote folli per catene / *Chain idler wheels / Umlenkrollen für Scharnierbandketten*

Materiale / *Material / Materialien:*
Poliammide/*Polyamide/Polyamid*
Viti: Acciaio inox/*Screws: Stainless steel/Schrauben: Edelstahl*
Dadi: ferro zincato/*Nuts: zinc plated steel/Mutter: verzinkter Stahl*

881 TAB

Ruota rinvio liscia, divisa, fresata
Split idler wheel, machined / geteilte Umlenkrolle, gefräst



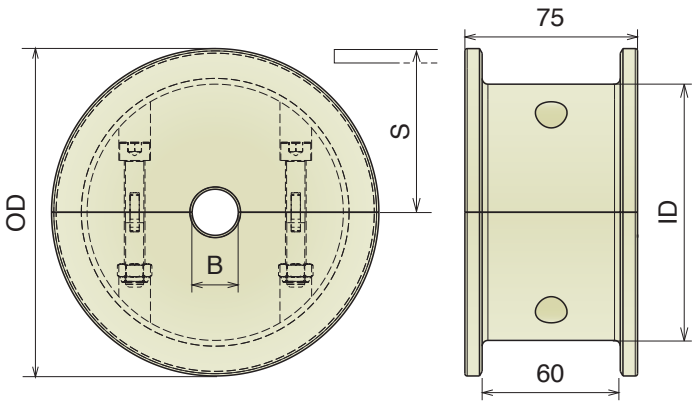

Part	Article-Nr.	ecq. Z-	Bore	OD	ID	S
618	61800	17	20	104,0	66,0	56,2
618	61801		25			
618	61802		30			
618	61803		35			
618	61804		40			
619	61900	19	20	117,0	75,0	62,6
619	61901		25			
619	61902		30			
619	61903		35			
619	61904		40			
620	62000	21	20	129,8	95,0	68,6
620	62001		25			
620	62002		30			
620	62003		35			
620	62004		40			
621	62100	23	20	142,2	108,0	74,6
621	62101		25			
621	62102		30			
621	62103		35			
621	62104		40			
622	62200	25	20	154,7	112,0	80,5
622	62201		25			
622	62202		30			
622	62203		35			
622	62204		40			
623	62300	27	20	167,2	120,0	88,5
623	62301		25			
623	62302		30			
623	62303		35			
623	62304		40			
624	62400	29	20	179,3	130,0	92,8
624	62401		25			
624	62402		30			
624	62403		35			
624	62404		40			

882 M

Ruota rinvio liscia, divisa, fresata
Split idler wheel, machined / geteilte Umlenkrolle, gefräst

Also suitable for Series 8257 - 8157 - 8857 M



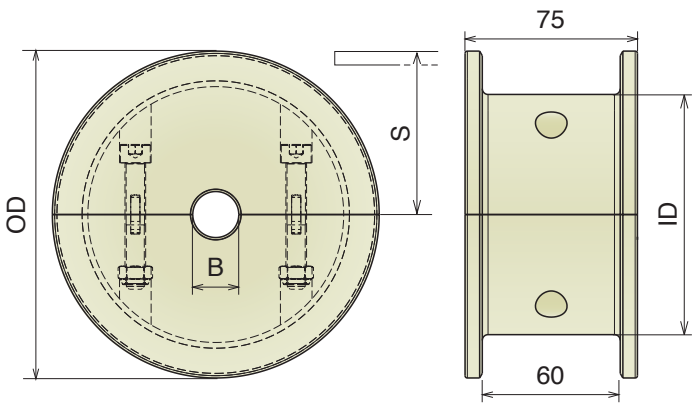

Part	Article-Nr.	ecq. Z-	Bore	OD	ID	S
629	62900	17	20	104,0	75,2	56,2
629	62901		25			
629	62902		30			
629	62903		35			
629	62904		40			
630	63000	19	20	117,0	92,2	62,6
630	63001		25			
630	63002		30			
630	63003		35			
630	63004		40			
631	63100	21	20	129,8	105,0	68,6
631	63101		25			
631	63102		30			
631	63103		35			
631	63104		40			
632	63200	23	20	142,2	111,3	74,6
632	63201		25			
632	63202		30			
632	63203		35			
632	63204		40			
633	63300	25	20	154,7	124,7	80,5
633	63301		25			
633	63302		30			
633	63303		35			
633	63304		40			
634	63400	27	20	167,2	135,0	88,5
634	63401		25			
634	63402		30			
634	63403		35			
634	63404		40			
635	63500	29	20	179,3	140,0	92,8
635	63501		25			
635	63502		30			
635	63503		35			
635	63504		40			

Movex



Magnetic, Tab & Bevel corner tracks

RS PRO

Series — Pag 113

880-881

M6 Series — Pag 116

M7 Series — Pag 117

M10 Series — Pag 118

M4 Series — Pag 119

M1 Series — Pag 120

M5 A/C/D Series — Pag 121

M8 Series — Pag 122

M42 Series — Pag 123

M9 Series — Pag 124

M43 Series — Pag 125

M21A Series
K450 — Pag 126

M22A Series
K450 — Pag 127

M27 Series
K450 — Pag 128

M61 Series
K750 — Pag 129

M62/66/65 Series
K750 — Pag 130

882-8857

M81 Series
K750 — Pag 131

M85 Series
K750 — Pag 132

M86 Series
K750 — Pag 133

M80 Series
K750 — Pag 134

M93/M94 Series
K1000 — Pag 135

M97/M98 Series
K1200 — Pag 136

LBP 882

MP861 Series
K750 — Pag 137

MP931/MP941 Series
K1000 — Pag 138

MP91 Series
K1000 — Pag 139

MP971/MP981 Series
K1200 — Pag 140

260 M

MB7 Series — Pag 141

MB6 Series — Pag 142

MB4 Series — Pag 143

MB8 Series — Pag 144

MB5D Series — Pag 145

MB22 Series
K450 — Pag 146

MB27 Series
K450 — Pag 147

261 M

MC7 Series — Pag 148

MC6 Series — Pag 149

MC4 Series — Pag 150

MC8 Series — Pag 151

MCD5 Series — Pag 152

MC22 Series
K450 — Pag 153

MC27 Series
K450 — Pag 154

520 M

MA7 Series — Pag 155

MA6 Series — Pag 156

MA4 Series — Pag 157

MA8 Series — Pag 158

MA42 Series — Pag 159

MA43 Series — Pag 160

MA5D Series — Pag 161

550 M

Series — Pag 162

TAB Version

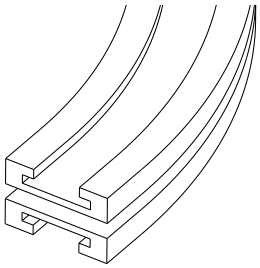

878-880-881 TAB-260 TAB
Pag 163

882 TAB
Pag 164

1873-1874 TAB
Pag 165

1843 TAB
Pag 166

1701 TAB-1706 TAB
Pag 167

880-881 B
Pag 168

Straight track section

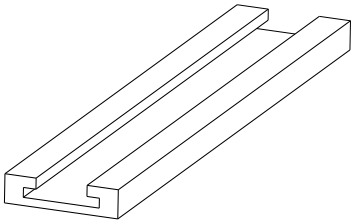

878-880-881 TAB
Pag 169

882 TAB
Pag 169

1873-1874 TAB
Pag 170

1843 TAB
Pag 170

1701 TAB-1706 TAB
Pag 171



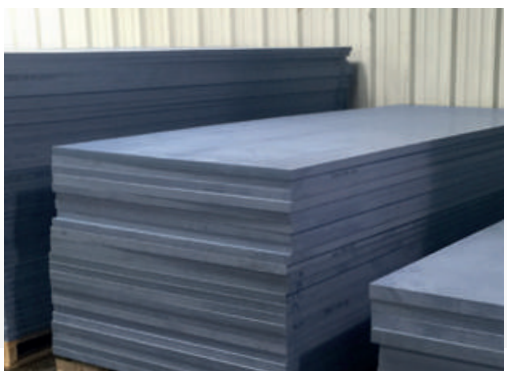

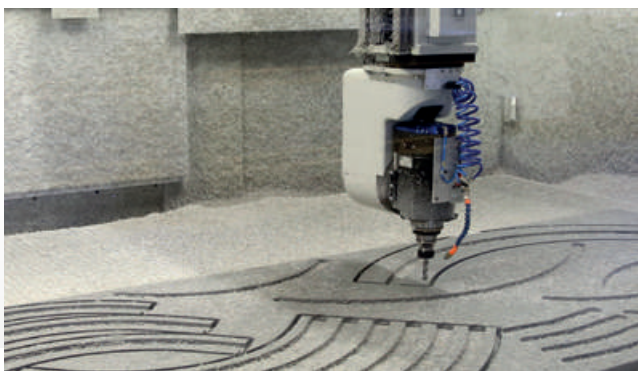

Movex RS PRO

SUPER RS MAGNETIC CURVE

New

Patented

A new concept of Magnetic curve.

Movex® introduces a new concept of magnetic magnetic curves to offer improved conveyor performance.

RS PRO is a patented system that consists of machined, plastic curve tracks equipped with permanent magnets with a new curve-return concept. This concept with a special return section-plate provides a total support of the chain or belt in the return of the curve.

RS PRO is equipped with wear-strips in BluLub, which contributes to improved PV-properties compared to standard UHMW-PE curves especially in applications with limited lubrication, higher speeds and/or higher loads.

RS PRO curves equipped with BluLub wear-parts create the possibility to reduce the energy consumption due the lower friction which also improves the product stability and wear-life of chains and belts.

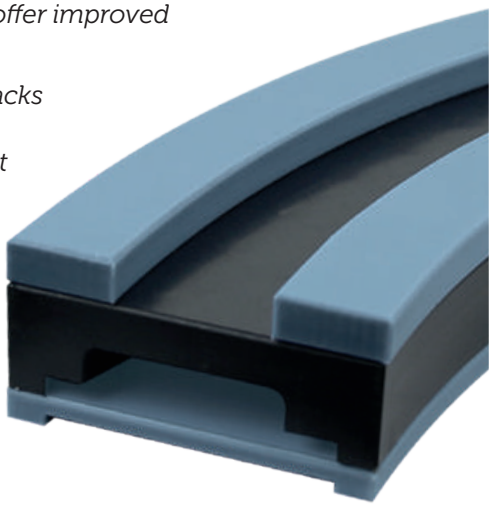

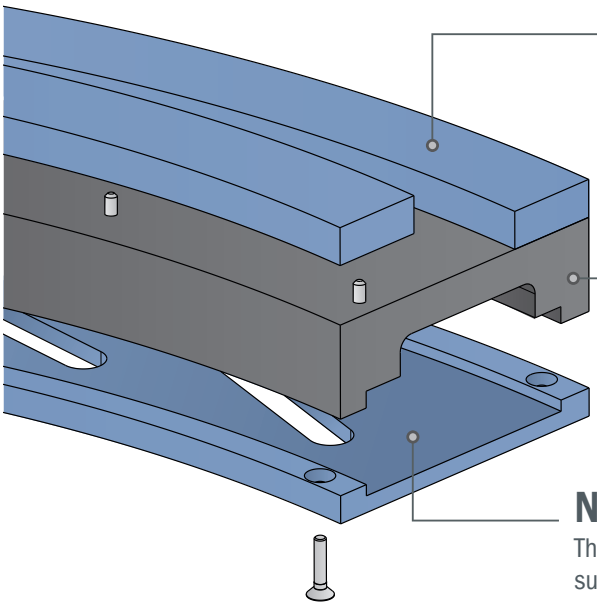

Wear strip *made in BluLub*

The new assembly system reduces the maintenance-time in case of replacement. BluLub material guarantees great performance especially in applications with limited use of lubricants, higher speeds and/or higher loads.

Return section

The return section of the RS PRO curve (made out of UHMW-PE) is designed to reduce the distance between chain and magnets; ensuring steady magnetic force and keeping the chain in the correct position.

New support plate *made in BluLub*

The new return-section plate made out of BluLub, creates a full support of the chain or belt in this return-section.

RS PRO patented curves can be used for both, chains as well as chain-belts. Depending on the installation of the return-section plate, the correct space is created in the return.

Basically, two executions in one design! ***More info in the next page.***

Suitable for Chain-belts & Plastic chains:

RS PRO

Advantages:

- **Lower Wear**
- **Lower Friction**
- **Easy to install**
- **Easy to maintain**
- **Longer wearlife of chain**
- **Lower Maintenance cost**



260 M



880 M

Wear difference between Standard & RS PRO

Contact area
Chain- Curve

260 M

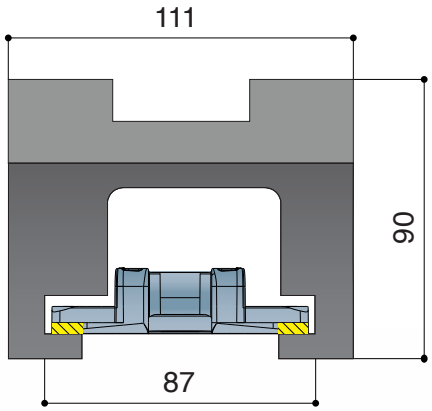

Standard CURVE

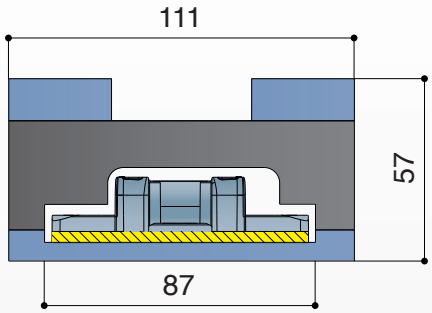

RS PRO CURVE
with BluLub WEARSTRIPS

880 M

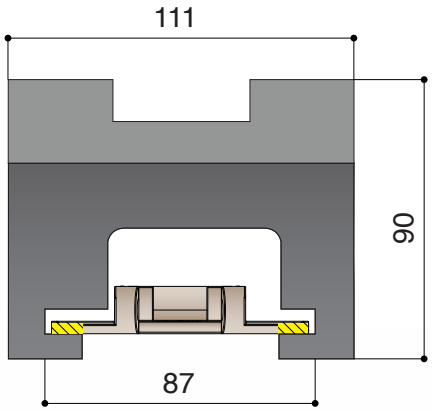

Standard CURVE

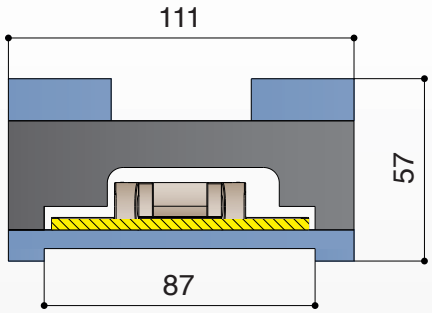

RS PRO CURVE
with BluLub WEARSTRIPS

Wear test

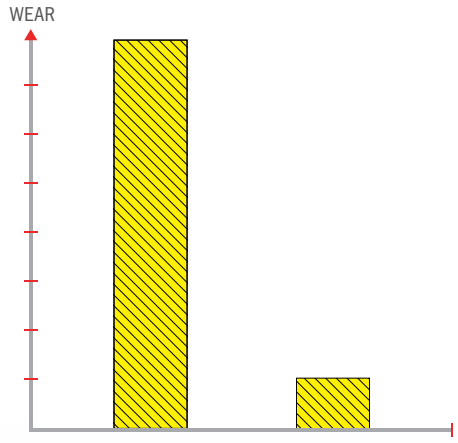

RS PRO patented system provides the largest contact surface area between chain and curve, this improves the product stability specific after many hours of operation. Due the large contact area, the wear is optimum and equally devided with a minimum of force in the return-section.

Movex® RS PRO
means longer wearlife of chain and curve, lower maintenance cost and better performance!



Chain used with
Standard CURVE



Chain used with
RS PRO CURVE

Movex®

RS PRO

New

Chain Reference	879 M - K325	880 M - K325	880 M - K330	881 M - K325	881 M - K330	260 M - K330

Curva Larghezza Base = 111 mm
Curve Basic Width = 111 mm
Kurve Basisbreite = 111 mm;

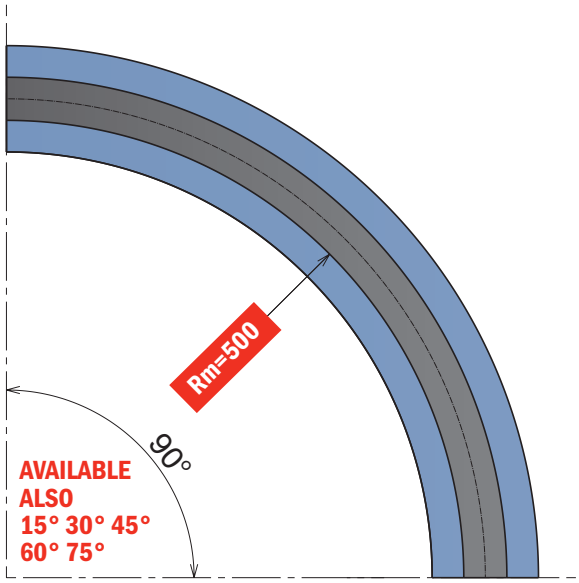

IN & OUT
AVAILABLE ALSO
125 mm - 100 mm - 50 mm

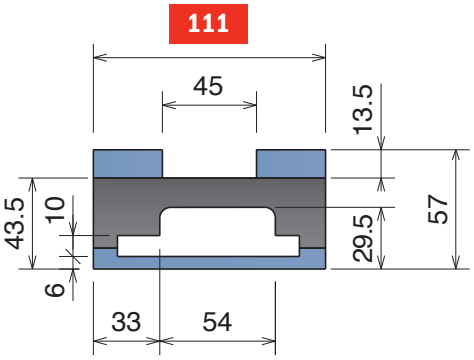

SINGLE TRACK for 260 M

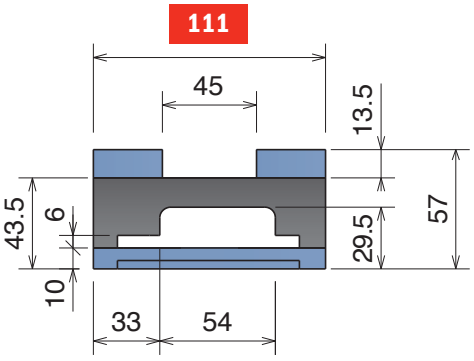

SINGLE TRACK for 880 M



Available in
BluLub®

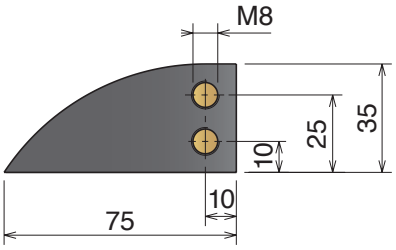

Magnetic System

Part	Article-Nr.	Tracks	W	Material
712	71211610RSPRO	1	111	



RS PRO CURVE

On request available
with different radius.

Materiale / Material / Materialien:
Polietilene UHMW-PE
Polyethylene UHMW-PE
Polyäthylen UHMW-PE

880-881 M6 Series

Chain Reference	879 M - K325	880 M - K325	880 M - K330	881 M - K325	881 M - K330

Curva Larghezza Base = 100 mm; Passo = 85 mm
Curve Basic Width = 100 mm; Pitch = 85 mm
Kurve Basisbreite = 100 mm; Teilung = 85 mm

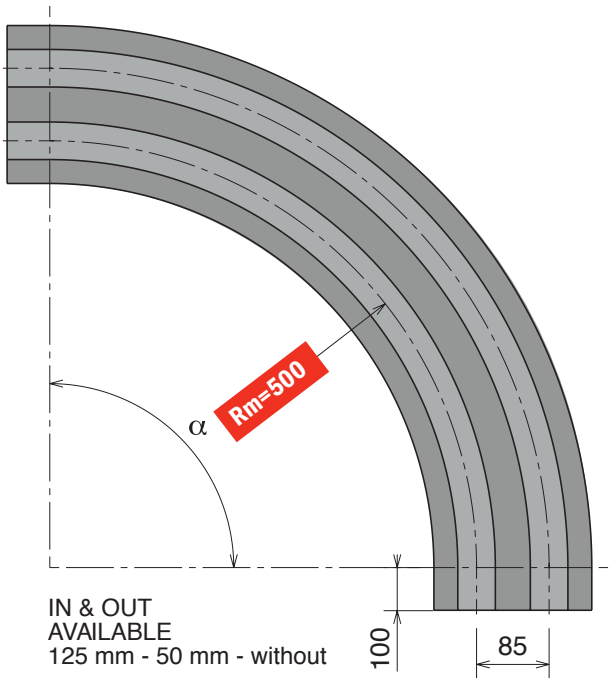

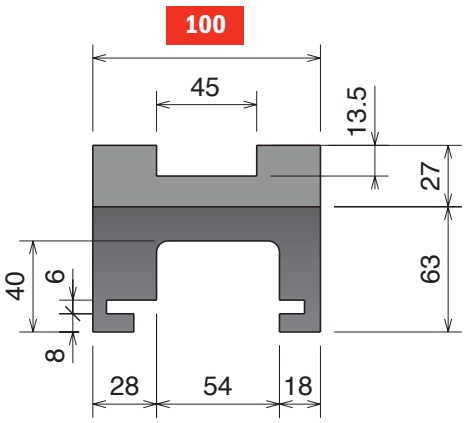

SINGLE TRACK

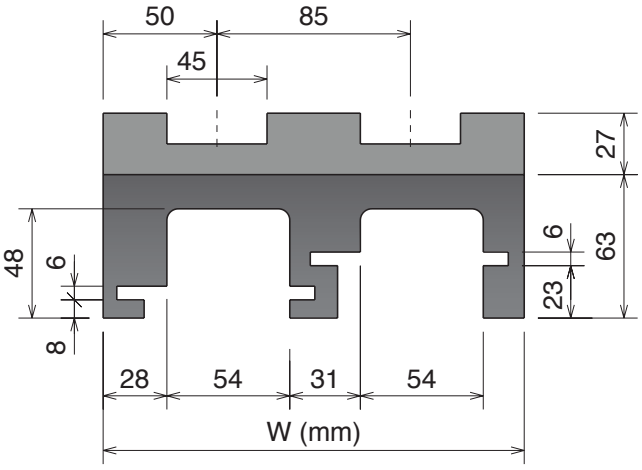

MULTI TRACK

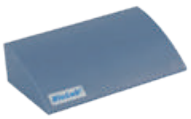

Available in
BluLub®

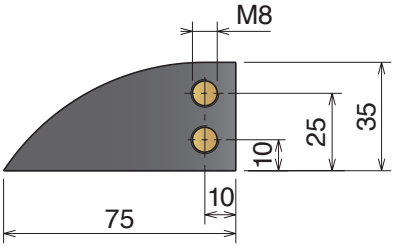

Magnetic System

Upper part available, on request, also in BluLub® and for abrasive applications.

Part	α 15°	α 30°	α 45°	α 60°	α 75°	α 90°	Tracks	W	Material
701	70111114	70111214	70111314	70111414	70111514	70111614	1	100	
701	70111124	70111224	70111324	70111424	70111524	70111624	2	185	
701	70111134	70111234	70111334	70111434	70111534	70111634	3	270	
701	70111144	70111244	70111344	70111444	70111544	70111644	4	355	
701	70111154	70111254	70111354	70111454	70111554	70111654	5	440	
701	70111164	70111264	70111364	70111464	70111564	70111664	6	525	
701	70111174	70111274	70111374	70111474	70111574	70111674	7	610	
701	70111184	70111284	70111384	70111484	70111584	70111684	8	695	



Standard codes on table



add "**B**" for BluLub®



add "**C**" for abrasive

Part	α 15°	α 30°	α 45°	α 60°	α 75°	α 90°	Tracks	W	Material
701	70111114RS	70111214RS	70111314RS	70111414RS	70111514RS	70111614RS	1	100	
701	70111124RS	70111224RS	70111324RS	70111424RS	70111524RS	70111624RS	2	185	
701	70111134RS	70111234RS	70111334RS	70111434RS	70111534RS	70111634RS	3	270	
701	70111144RS	70111244RS	70111344RS	70111444RS	70111544RS	70111644RS	4	355	
701	70111154RS	70111254RS	70111354RS	70111454RS	70111554RS	70111654RS	5	440	
701	70111164RS	70111264RS	70111364RS	70111464RS	70111564RS	70111664RS	6	525	
701	70111174RS	70111274RS	70111374RS	70111474RS	70111574RS	70111674RS	7	610	
701	70111184RS	70111284RS	70111384RS	70111484RS	70111584RS	70111684RS	8	695	



RS
add "**RS**" for RS-version

880-881 *M7 Series*

Chain Reference	879 M - K325	880 M - K325	880 M - K330	881 M - K325	881 M - K330

Curva Larghezza Base = 100 mm; Passo = 85 mm
Curve Basic Width = 100 mm; Pitch = 85 mm
Kurve Basisbreite = 100 mm; Teilung = 85 mm

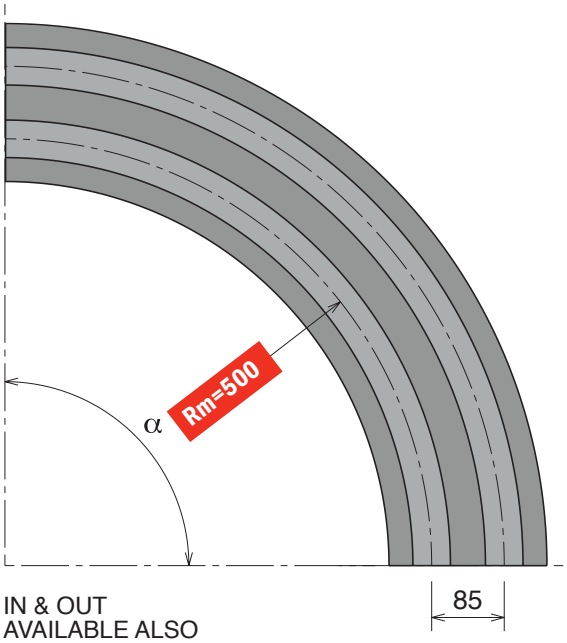

IN & OUT
AVAILABLE ALSO
125 mm - 100 mm - 50 mm



Available in
BluLub®

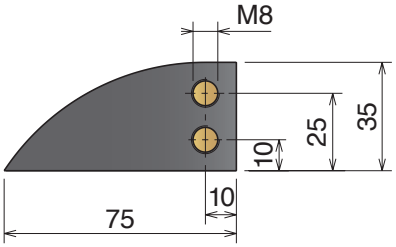

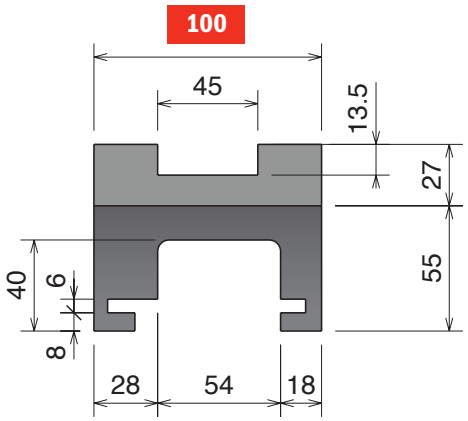

SINGLE TRACK

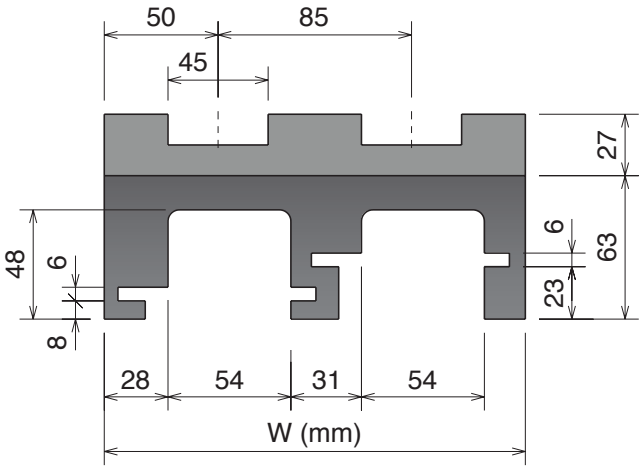

MULTI TRACK

Magnetic System

Upper part available, on request, also in BluLub® and for abrasive applications.

Part	α 15°	α 30°	α 45°	α 60°	α 75°	α 90°	Tracks	W	Material
701	70111110	70111210	70111310	70111410	70111510	70111610	1	100	
701	70111120	70111220	70111320	70111420	70111520	70111620	2	185	
701	70111130	70111230	70111330	70111430	70111530	70111630	3	270	
701	70111140	70111240	70111340	70111440	70111540	70111640	4	355	
701	70111150	70111250	70111350	70111450	70111550	70111650	5	440	
701	70111160	70111260	70111360	70111460	70111560	70111660	6	525	
701	70111170	70111270	70111370	70111470	70111570	70111670	7	610	
701	70111180	70111280	70111380	70111480	70111580	70111680	8	695	



Standard codes on table



add "**B**" for BluLub®



add "**C**" for abrasive

Part	α 15°	α 30°	α 45°	α 60°	α 75°	α 90°	Tracks	W	Material
701	70111110RS	70111210RS	70111310RS	70111410RS	70111510RS	70111610RS	1	100	
701	70111120RS	70111220RS	70111320RS	70111420RS	70111520RS	70111620RS	2	185	
701	70111130RS	70111230RS	70111330RS	70111430RS	70111530RS	70111630RS	3	270	
701	70111140RS	70111240RS	70111340RS	70111440RS	70111540RS	70111640RS	4	355	
701	70111150RS	70111250RS	70111350RS	70111450RS	70111550RS	70111650RS	5	440	
701	70111160RS	70111260RS	70111360RS	70111460RS	70111560RS	70111660RS	6	525	
701	70111170RS	70111270RS	70111370RS	70111470RS	70111570RS	70111670RS	7	610	
701	70111180RS	70111280RS	70111380RS	70111480RS	70111580RS	70111680RS	8	695	



RS
add "**RS**" for RS-version

Materiale / Material / Materialien:
Polietilene UHMW-PE
Polyethylene UHMW-PE
Polyäthylen UHMW-PE

880-881 M10 Series

Chain Reference	879 M - K325	880 M - K325	880 M - K330	881 M - K325	881 M - K330

Curva Larghezza Base = 110 mm; Passo = 85 mm
Curve Basic Width = 110 mm; Pitch = 85 mm
Kurve Basisbreite = 110 mm; Teilung = 85 mm

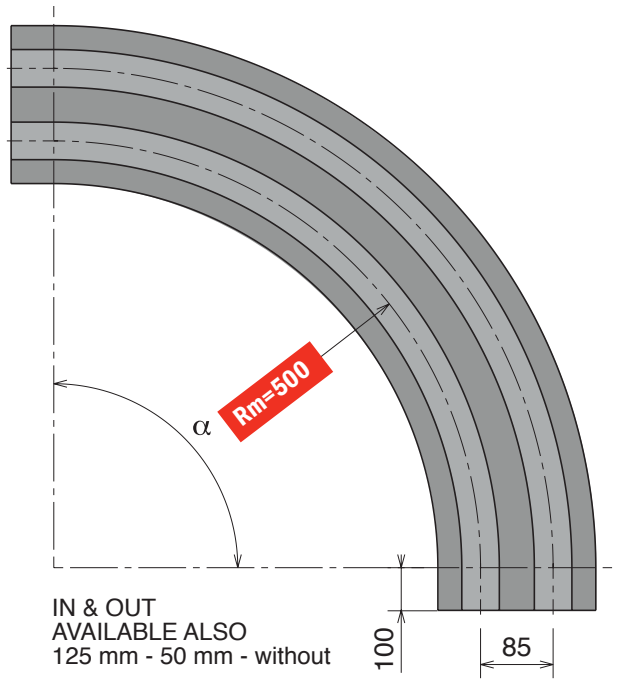

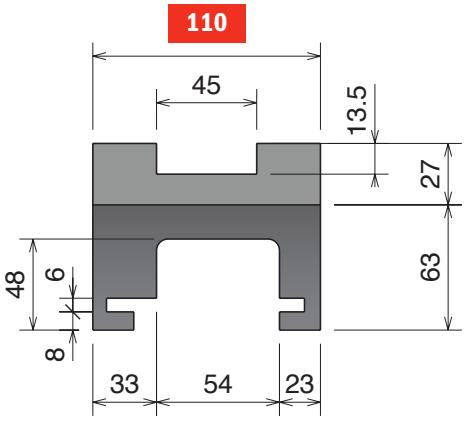

SINGLE TRACK

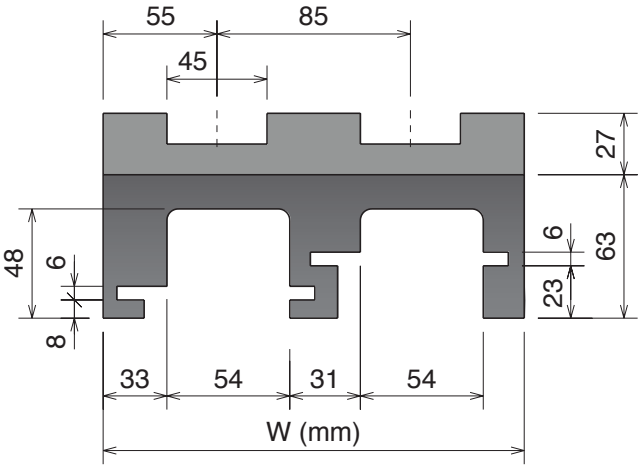

MULTI TRACK



Available in
BluLub®

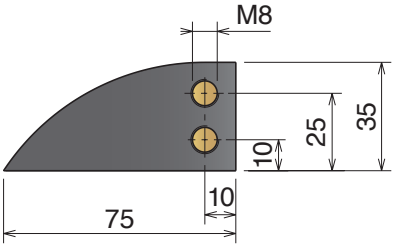

Magnetic System

Upper part available, on request, also in BluLub® and for abrasive applications.

Part	α 15°	α 30°	α 45°	α 60°	α 75°	α 90°	Tracks	W	Material
711	71111114	71111214	71111314	71111414	71111514	71111614	1	110	
711	71111124	71111224	71111324	71111424	71111524	71111624	2	195	
711	71111134	71111234	71111334	71111434	71111534	71111634	3	280	
711	71111144	71111244	71111344	71111444	71111544	71111644	4	365	
711	71111154	71111254	71111354	71111454	71111554	71111654	5	450	
711	71111164	71111264	71111364	71111464	71111564	71111664	6	535	
711	71111174	71111274	71111374	71111474	71111574	71111674	7	620	
711	71111184	71111284	71111384	71111484	71111584	71111684	8	705	

Standard codes on table

add "**B**" for BluLub®

add "**C**" for abrasive

Part	α 15°	α 30°	α 45°	α 60°	α 75°	α 90°	Tracks	W	Material
711	71111114RS	71111214RS	71111314RS	71111414RS	71111514RS	71111614RS	1	110	
711	71111124RS	71111224RS	71111324RS	71111424RS	71111524RS	71111624RS	2	195	
711	71111134RS	71111234RS	71111334RS	71111434RS	71111534RS	71111634RS	3	280	
711	71111144RS	71111244RS	71111344RS	71111444RS	71111544RS	71111644RS	4	365	
711	71111154RS	71111254RS	71111354RS	71111454RS	71111554RS	71111654RS	5	450	
711	71111164RS	71111264RS	71111364RS	71111464RS	71111564RS	71111664RS	6	535	
711	71111174RS	71111274RS	71111374RS	71111474RS	71111574RS	71111674RS	7	620	
711	71111184RS	71111284RS	71111384RS	71111484RS	71111584RS	71111684RS	8	705	

RS
add "**RS**" for RS-version

880-881 *M4 Series*

Chain Reference	879 M - K325	880 M - K325	880 M - K330	881 M - K325	881 M - K330

Curva Larghezza Base = 111 mm; Passo = 85 mm
Curve Basic Width = 111 mm; Pitch = 85 mm
Kurve Basisbreite = 111 mm; Teilung = 85 mm

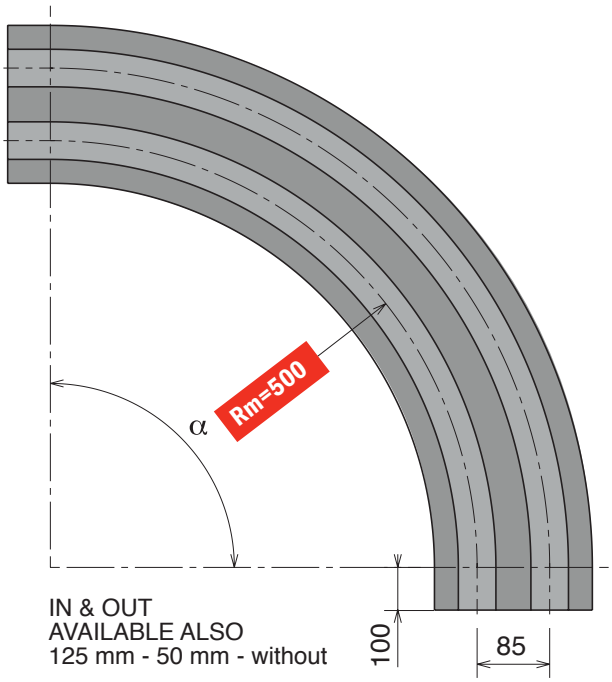

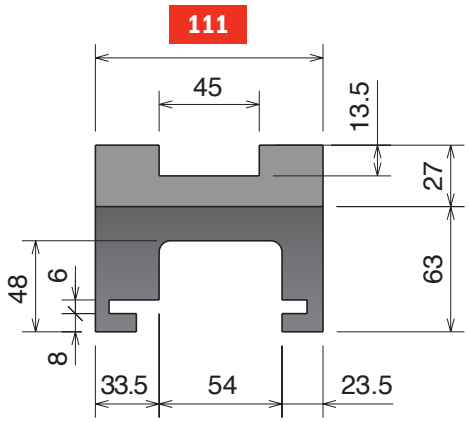

SINGLE TRACK

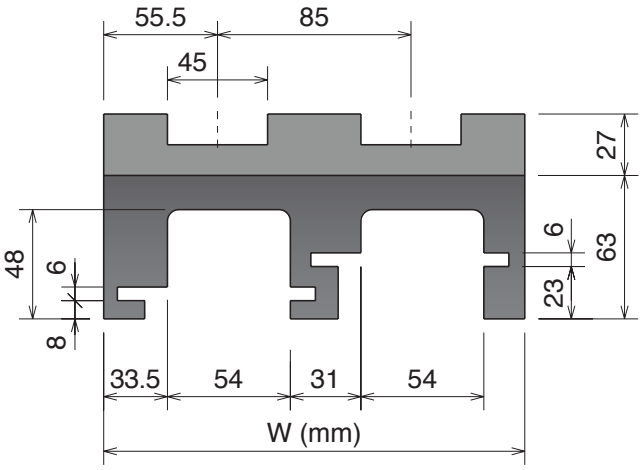

MULTI TRACK



Available in
BluLub®

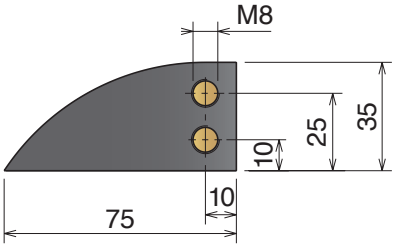

Magnetic System

Upper part available, on request, also in BluLub® and for abrasive applications.

Part	α 15°	α 30°	α 45°	α 60°	α 75°	α 90°	Tracks	W	Material
712	71211114	71211214	71211314	71211414	71211514	71211614	1	111	
712	71211124	71211224	71211324	71211424	71211524	71211624	2	196	
712	71211134	71211234	71211334	71211434	71211534	71211634	3	281	
712	71211144	71211244	71211344	71211444	71211544	71211644	4	366	
712	71211154	71211254	71211354	71211454	71211554	71211654	5	451	
712	71211164	71211264	71211364	71211464	71211564	71211664	6	536	
712	71211174	71211274	71211374	71211474	71211574	71211674	7	621	
712	71211184	71211284	71211384	71211484	71211584	71211684	8	706	



Standard codes on table



add "**B**" for BluLub®



add "**C**" for abrasive

Part	α 15°	α 30°	α 45°	α 60°	α 75°	α 90°	Tracks	W	Material
712	71211114RS	71211214RS	71211314RS	71211414RS	71211514RS	71211614RS	1	111	
712	71211124RS	71211224RS	71211324RS	71211424RS	71211524RS	71211624RS	2	196	
712	71211134RS	71211234RS	71211334RS	71211434RS	71211534RS	71211634RS	3	281	
712	71211144RS	71211244RS	71211344RS	71211444RS	71211544RS	71211644RS	4	366	
712	71211154RS	71211254RS	71211354RS	71211454RS	71211554RS	71211654RS	5	451	
712	71211164RS	71211264RS	71211364RS	71211464RS	71211564RS	71211664RS	6	536	
712	71211174RS	71211274RS	71211374RS	71211474RS	71211574RS	71211674RS	7	621	
712	71211184RS	71211284RS	71211384RS	71211484RS	71211584RS	71211684RS	8	706	



RS
add "**RS**" for RS-version

Materiale / Material / Materialien:
Polietilene UHMW-PE
Polyethylene UHMW-PE
Polyäthylen UHMW-PE

880-881 M1 Series

Chain Reference	879 M - K325	880 M - K325	880 M - K330	881 M - K325	881 M - K330

Curva Larghezza Base = 100 mm; Passo = 89 mm
Curve Basic Width = 100 mm; Pitch = 89 mm
Kurve Basisbreite = 100 mm; Teilung = 89 mm

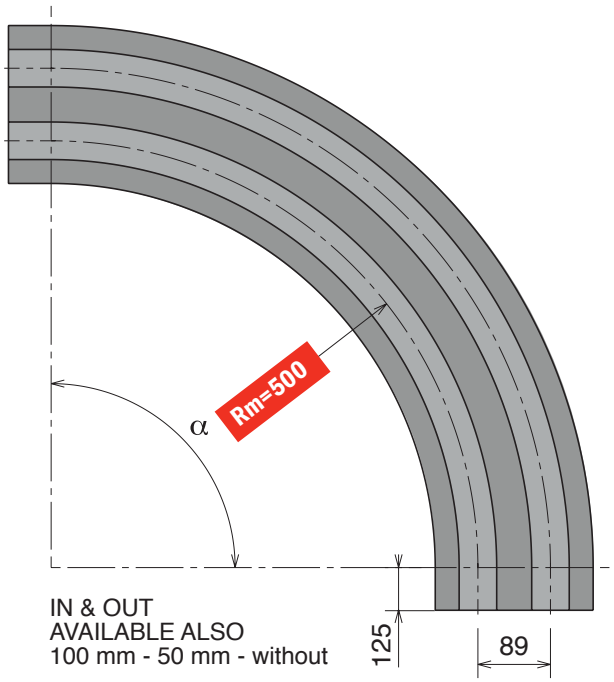

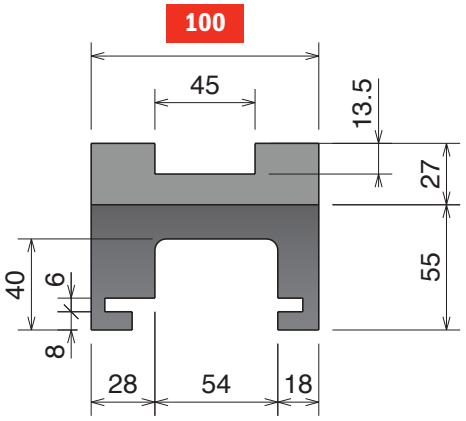

SINGLE TRACK

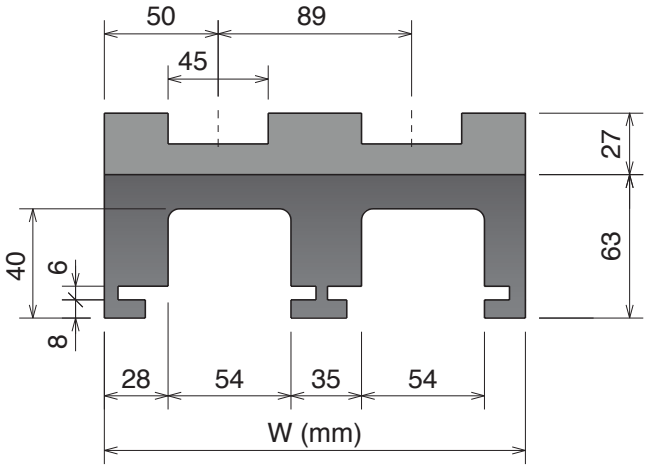

MULTI TRACK



Available in BluLub®

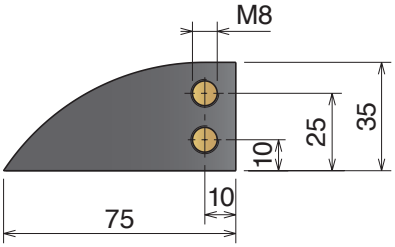

Magnetic System

Upper part available, on request, also in BluLub® and for abrasive applications.

Part	α 15°	α 30°	α 45°	α 60°	α 75°	α 90°	Tracks	W	Material
730	73011115	73011215	73011315	73011415	73011515	73011615	1	100	
730	73011125	73011225	73011325	73011425	73011525	73011625	2	189	
730	73011135	73011235	73011335	73011435	73011535	73011635	3	278	
730	73011145	73011245	73011345	73011445	73011545	73011645	4	367	
730	73011155	73011255	73011355	73011455	73011555	73011655	5	456	
730	73011165	73011265	73011365	73011465	73011565	73011665	6	545	
730	73011175	73011275	73011375	73011475	73011575	73011675	7	634	
730	73011185	73011285	73011385	73011485	73011585	73011685	8	723	



Standard codes on table



add "**B**" for BluLub®



add "**C**" for abrasive

Part	α 15°	α 30°	α 45°	α 60°	α 75°	α 90°	Tracks	W	Material
730	73011115RS	73011215RS	73011315RS	73011415RS	73011515RS	73011615RS	1	100	
730	73011125RS	73011225RS	73011325RS	73011425RS	73011525RS	73011625RS	2	189	
730	73011135RS	73011235RS	73011335RS	73011435RS	73011535RS	73011635RS	3	278	
730	73011145RS	73011245RS	73011345RS	73011445RS	73011545RS	73011645RS	4	367	
730	73011155RS	73011255RS	73011355RS	73011455RS	73011555RS	73011655RS	5	456	
730	73011165RS	73011265RS	73011365RS	73011465RS	73011565RS	73011665RS	6	545	
730	73011175RS	73011275RS	73011375RS	73011475RS	73011575RS	73011675RS	7	634	
730	73011185RS	73011285RS	73011385RS	73011485RS	73011585RS	73011685RS	8	723	



RS
add "**RS**" for RS-version

880-881 *M5 A/C/D Series*

Chain Reference	879 M - K325	880 M - K325	880 M - K330	881 M - K325	881 M - K330

Curva Larghezza Base = 100 mm
Curve Basic Width = 100 mm
Kurve Basisbreite = 100 mm

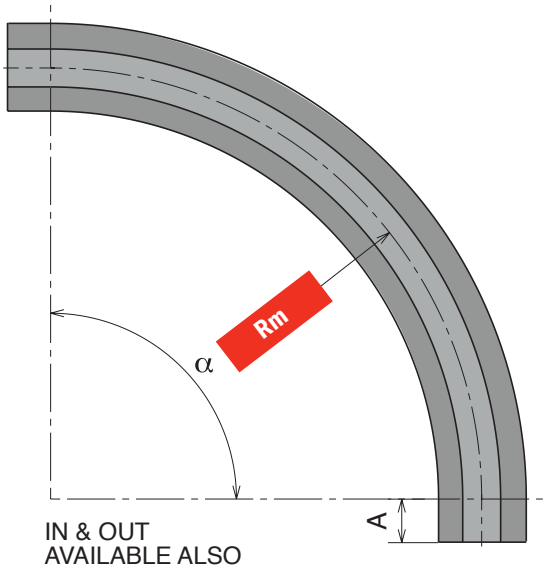

IN & OUT
AVAILABLE ALSO
100 mm - 50 mm - without

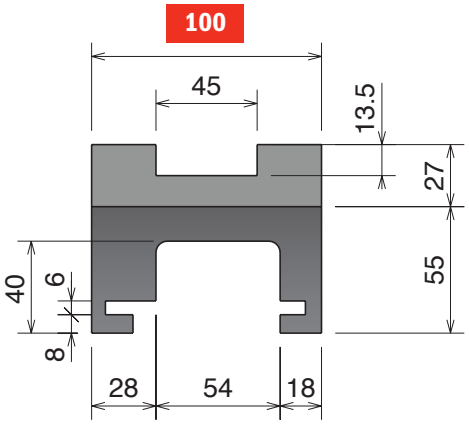



Available in
BluLub®

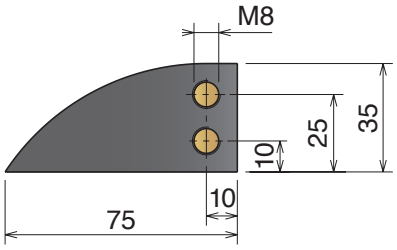

Upper part available, on request, also in BluLub® and for abrasive applications.

Magnetic System

M5A Series - Rm 680

Part	α 15°	α 30°	α 45°	α 60°	α 75°	α 90°		Tracks	W	A
703	70315114	70315214	70315314	70315414	70315514	70315614		1	100	100

Material — **Standard** codes on table — add "**B**" for BluLub® — add "**C**" for abrasive — add "**RS**" for RS-version

M5C Series - Rm 860

Part	α 15°	α 30°	α 45°	α 60°	α 75°	α 90°		Tracks	W	A
703	70318115	70318215	70318315	70318415	70318515	70318615		1	100	125

Material — **Standard** codes on table — add "**B**" for BluLub® — add "**C**" for abrasive — add "**RS**" for RS-version

M5D Series - Rm 1000

Part	α 15°	α 30°	α 45°	α 60°	α 75°	α 90°		Tracks	W	A
703	70319110	70319210	70319310	70319410	70319510	70319610		1	100	0

Material — **Standard** codes on table — add "**B**" for BluLub® — add "**C**" for abrasive — add "**RS**" for RS-version

Materiale / Material / Materialien:
Polietilene UHMW-PE
Polyethylene UHMW-PE
Polyäthylen UHMW-PE

880-881 M8 Series

Chain Reference	879 M - K325	880 M - K325	880 M - K330	881 M - K325	881 M - K330

Curva Larghezza Base = 100 mm; Passo = 85 mm
Curve Basic Width = 100 mm; Pitch = 85 mm
Kurve Basisbreite = 100 mm; Teilung = 85 mm

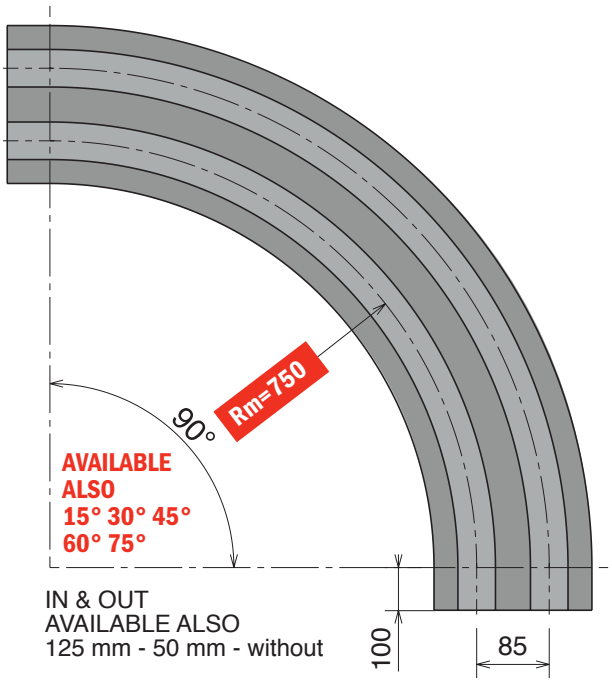

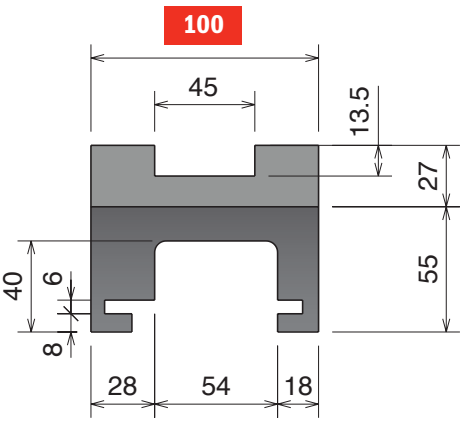

SINGLE TRACK

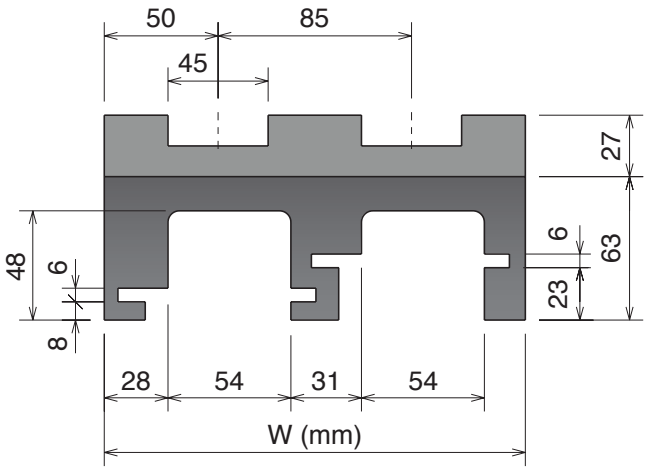

MULTI TRACK



Available in BluLub®

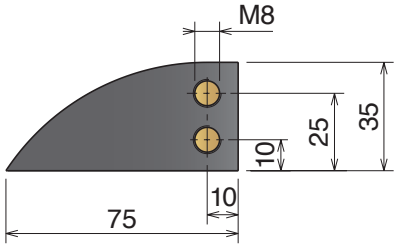

Magnetic System

Upper part available, on request, also in BluLub® and for abrasive applications.

Part	Article-Nr.	Tracks	W	Material
702	70216614	1	100	
702	70216624	2	185	
702	70216634	3	270	
702	70216644	4	355	
702	70216654	5	440	
702	70216664	6	525	
702	70216674	7	610	
702	70216684	8	695	



Standard codes on table



add "**B**" for BluLub®



add "**C**" for abrasive

Part	Article-Nr.	Tracks	W	Material
702	70216614RS	1	100	
702	70216624RS	2	185	
702	70216634RS	3	270	
702	70216644RS	4	355	
702	70216654RS	5	440	
702	70216664RS	6	525	
702	70216674RS	7	610	
702	70216684RS	8	695	



RS
add "**RS**" for RS-version

880-881 *M42 Series*

Chain Reference	879 M - K325	880 M - K325	880 M - K330	881 M - K325	881 M - K330

Curva Larghezza Base = 111 mm; Passo = 85 mm
Curve Basic Width = 111 mm; Pitch = 85 mm
Kurve Basisbreite = 111 mm; Teilung = 85 mm

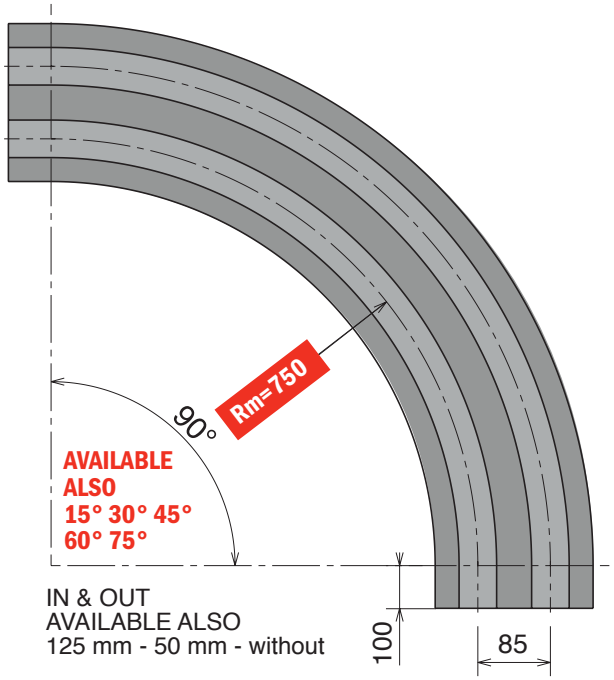



Available in
BluLub®

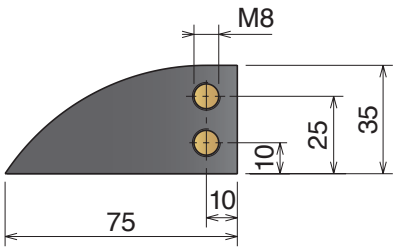

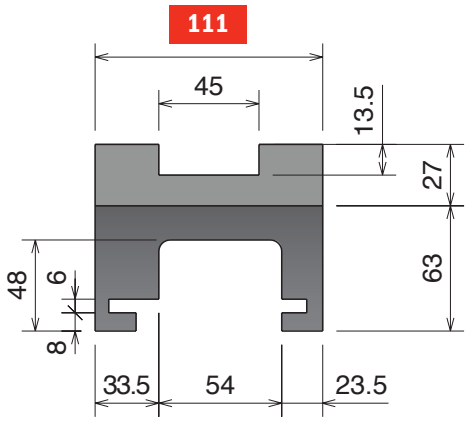

SINGLE TRACK

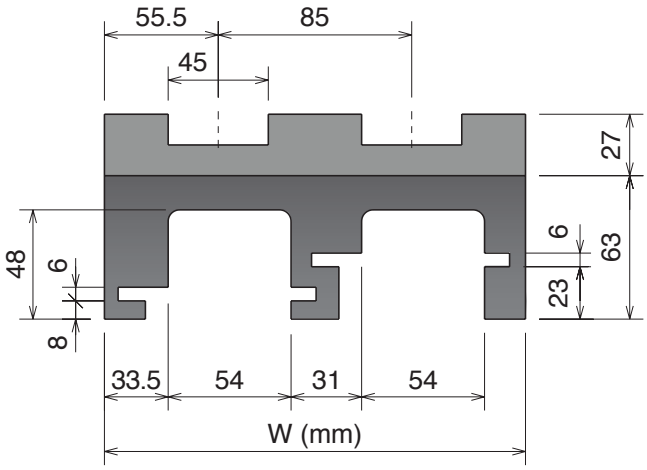

MULTI TRACK

Magnetic System

Upper part available, on request, also in BluLub® and for abrasive applications.

Part	Article-Nr.	Tracks	W	Material
713	**71316614**	1	111	
713	**71316624**	2	196	
713	**71316634**	3	281	
713	**71316644**	4	366	
713	**71316654**	5	451	
713	**71316664**	6	536	
713	**71316674**	7	621	
713	**71316684**	8	706	



Standard codes on table



add "**B**" for BluLub®



add "**C**" for abrasive

Part	Article-Nr.	Tracks	W	Material
713	**71316614RS**	1	111	
713	**71316624RS**	2	196	
713	**71316634RS**	3	281	
713	**71316644RS**	4	366	
713	**71316654RS**	5	451	
713	**71316664RS**	6	536	
713	**71316674RS**	7	621	
713	**71316684RS**	8	706	



RS
add "**RS**" for RS-version

Materiale / Material / Materialien:
Polietilene UHMW-PE
Polyethylene UHMW-PE
Polyäthylen UHMW-PE

880-881 M9 Series

Chain Reference	879 M - K325	880 M - K325	880 M - K330	881 M - K325	881 M - K330

Curva Larghezza Base = 110 mm; Passo = 90 mm
Curve Basic Width = 110 mm; Pitch = 90 mm
Kurve Basisbreite = 110 mm; Teilung = 90 mm

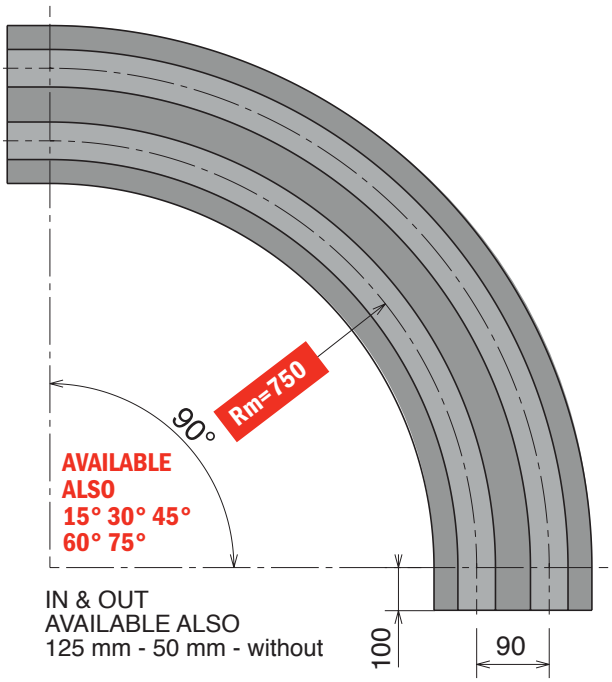



Available in BluLub®

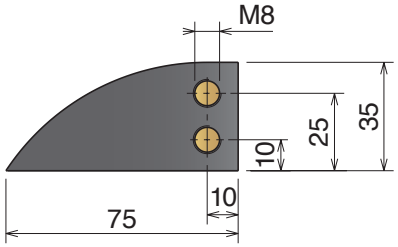

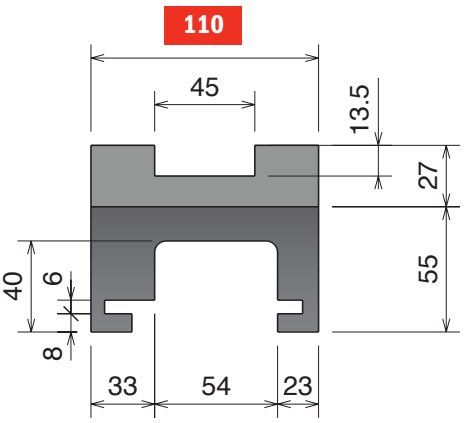

SINGLE TRACK

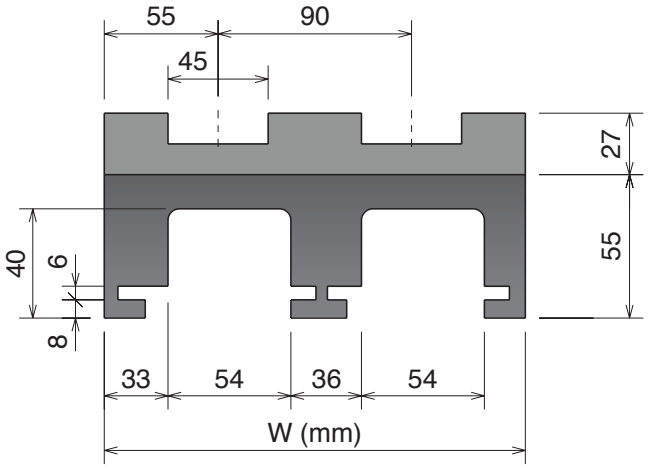

MULTI TRACK

Magnetic System

Upper part available, on request, also in BluLub® and for abrasive applications.

Part	Article-Nr.	Tracks	W	Material
714	71416614	1	110	
714	71416624	2	200	
714	71416634	3	290	
714	71416644	4	380	
714	71416654	5	470	
714	71416664	6	560	
714	71416674	7	650	
714	71416684	8	740	



Standard codes on table



add "**B**" for BluLub®



add "**C**" for abrasive

Part	Article-Nr.	Tracks	W	Material
714	71416614RS	1	110	
714	71416624RS	2	200	
714	71416634RS	3	290	
714	71416644RS	4	380	
714	71416654RS	5	470	
714	71416664RS	6	560	
714	71416674RS	7	650	
714	71416684RS	8	740	



RS
add "**RS**" for RS-version

880-881 *M43 Series*

Chain Reference	879 M - K325	880 M - K325	880 M - K330	881 M - K325	881 M - K330

Curva Larghezza Base = 111 mm; Passo = 85 mm
Curve Basic Width = 111 mm; Pitch = 85 mm
Kurve Basisbreite = 111 mm; Teilung = 85 mm

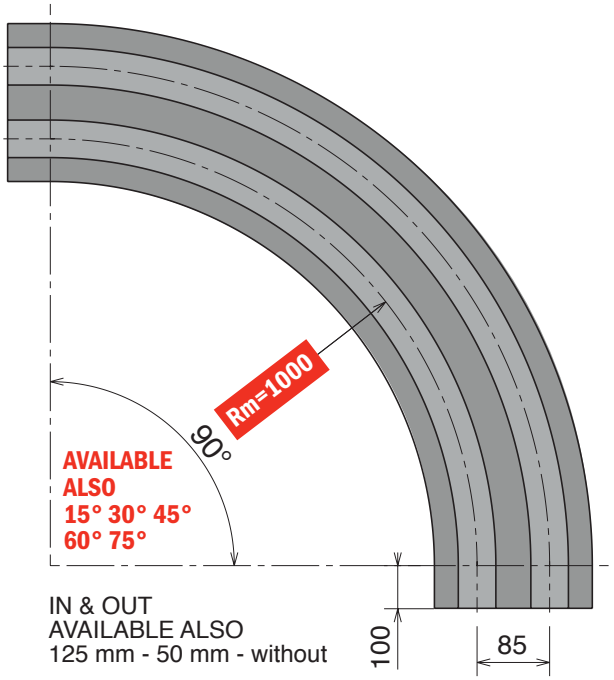



Available in
BluLub®

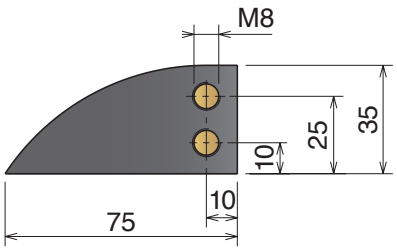

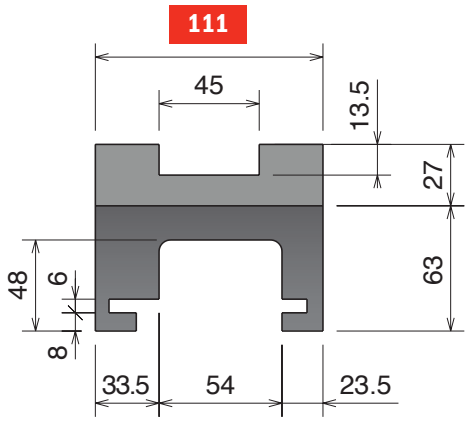

SINGLE TRACK

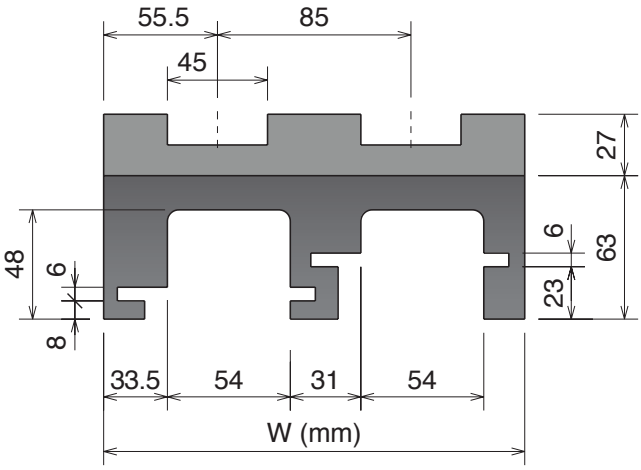

MULTI TRACK

Magnetic System

Upper part available, on request, also in BluLub® and for abrasive applications.

Part	Article-Nr.	Tracks	W	Material
712	71219614	1	111	
712	71219624	2	196	
712	71219634	3	281	
712	71219644	4	366	
712	71219654	5	451	
712	71219664	6	536	
712	71219674	7	621	
712	71219684	8	706	



Standard codes on table



add "**B**" for BluLub®



add "**C**" for abrasive

Part	Article-Nr.	Tracks	W	Material
712	71219614RS	1	111	
712	71219624RS	2	196	
712	71219634RS	3	281	
712	71219644RS	4	366	
712	71219654RS	5	451	
712	71219664RS	6	536	
712	71219674RS	7	621	
712	71219684RS	8	706	



RS
add "**RS**" for RS-version

Materiale / Material / Materialien:
Polietilene UHMW-PE
Polyethylene UHMW-PE
Polyäthylen UHMW-PE

880-881 K450 M21A Series

Chain Reference	879 M - K450	880 M - K450	881 M - K450

Curva Larghezza Base = 129 mm; Passo = 120 mm
Curve Basic Width = 129 mm; Pitch = 120 mm
Kurve Basisbreite = 129 mm; Teilung = 120 mm

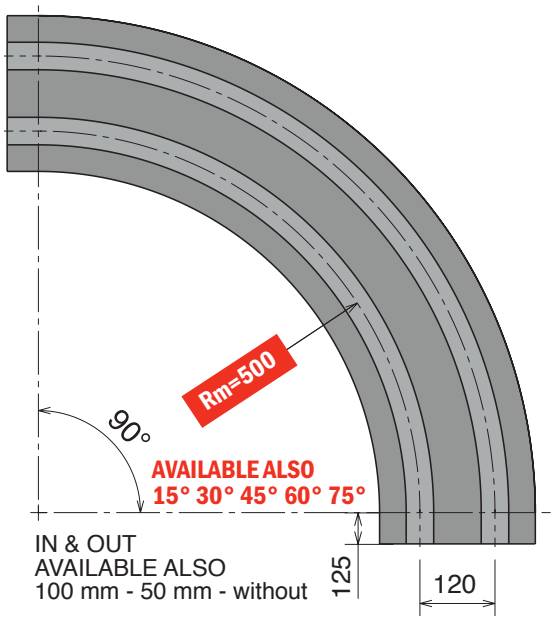

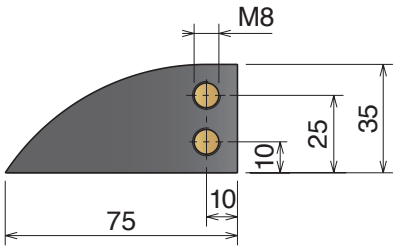



Available in BluLub®

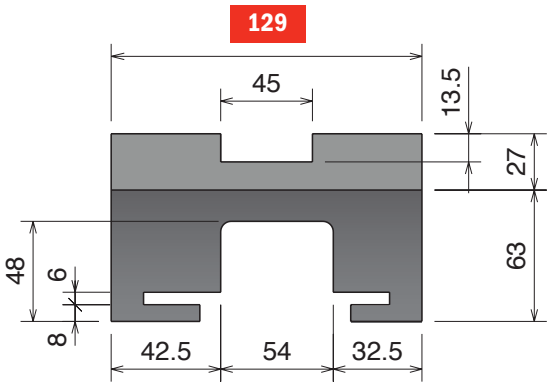

SINGLE TRACK

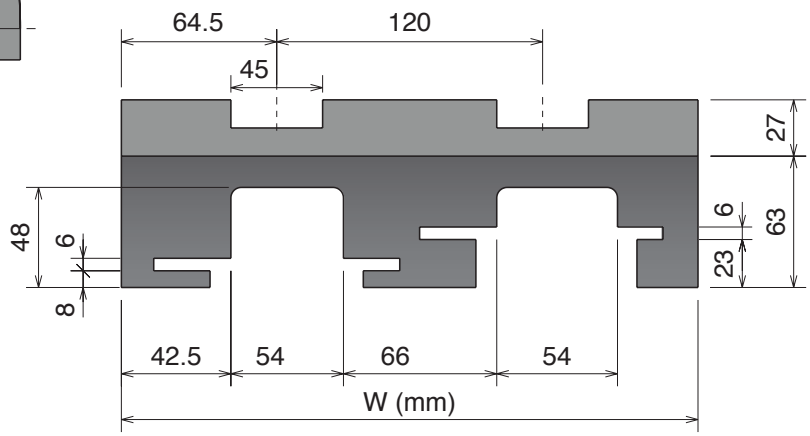

MULTI TRACK

Magnetic System

Upper part available, on request, also in BluLub® and for abrasive applications.

Part	Article-Nr.	Tracks	W	Material
715	71511615	1	129	
715	71511625	2	249	
715	71511635	3	369	
715	71511645	4	489	
715	71511655	5	609	


Standard codes on table


add "**B**" for BluLub®


add "**C**" for abrasive

Part	Article-Nr.	Tracks	W	Material
715	71511615RS	1	129	
715	71511625RS	2	249	
715	71511635RS	3	369	
715	71511645RS	4	489	
715	71511655RS	5	609	


RS
add "**RS**" for RS-version

880-881 K450 *M22A Series*

Chain Reference	879 M - K450	880 M - K450	881 M - K450

Curva Larghezza Base = 129 mm; Passo = 120 mm
Curve Basic Width = 129 mm; Pitch = 120 mm
Kurve Basisbreite = 129 mm; Teilung = 120 mm

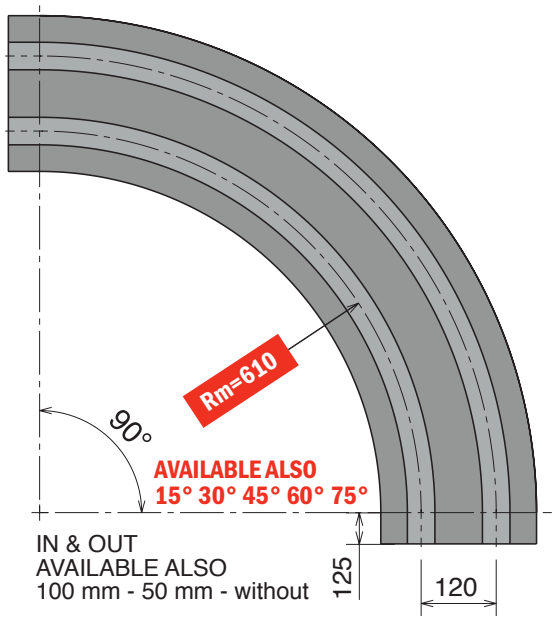

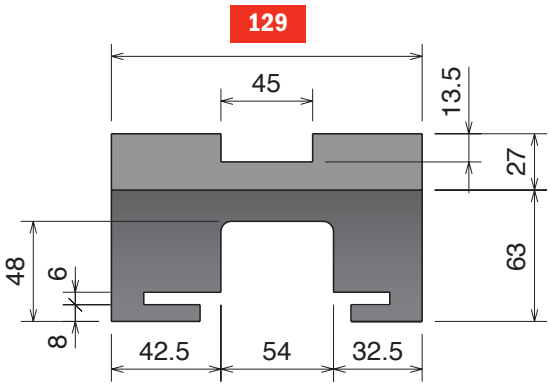

SINGLE TRACK

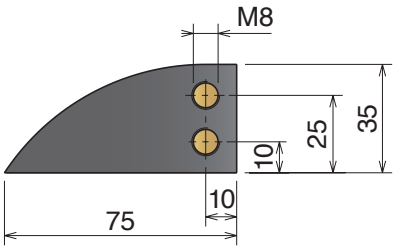

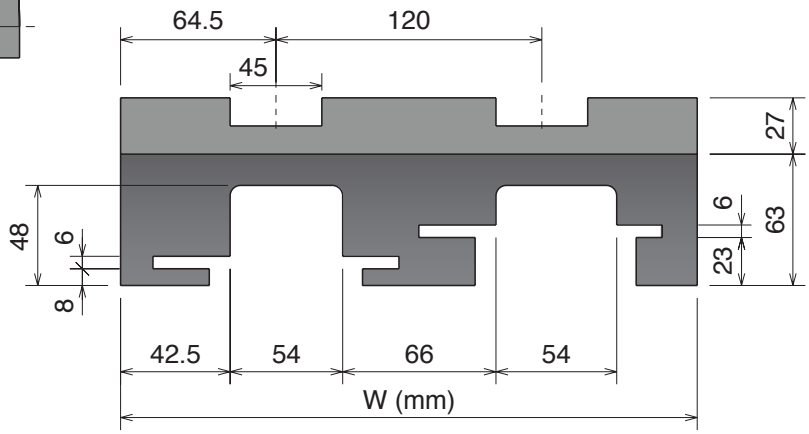

MULTI TRACK



Available in
BluLub®

Magnetic System

Upper part available, on request, also in BluLub® and for abrasive applications.

Part	Article-Nr.	Tracks	W	Material
704	70413615	1	129	
704	70413625	2	249	
704	70413635	3	369	
704	70413645	4	489	
704	70413655	5	609	


Standard codes on table


add "**B**" for BluLub®


add "**C**" for abrasive

Part	Article-Nr.	Tracks	W	Material
704	70413615RS	1	129	
704	70413625RS	2	249	
704	70413635RS	3	369	
704	70413645RS	4	489	
704	70413655RS	5	609	


RS
add "**RS**" for RS-version

Materiale / Material / Materialien:
Polietilene UHMW-PE
Polyethylene UHMW-PE
Polyäthylen UHMW-PE

880-881 K450 M27 Series

Chain Reference	879 M - K450	880 M - K450	881 M - K450

Curva Larghezza Base = 129 mm; Passo = 117 mm
Curve Basic Width = 129 mm; Pitch = 117 mm
Kurve Basisbreite = 129 mm; Teilung = 117 mm

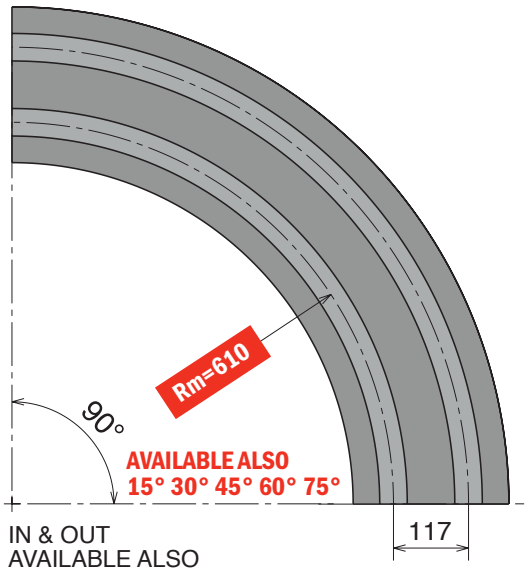

IN & OUT
AVAILABLE ALSO
100 mm - 50 mm

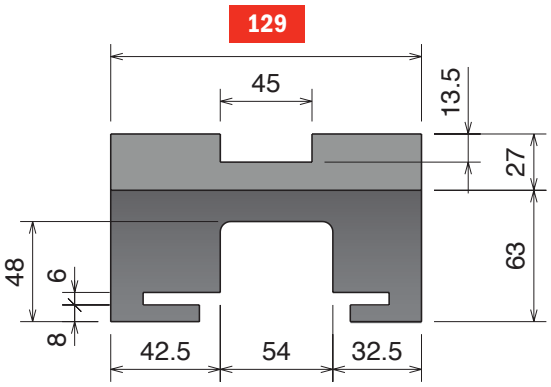

SINGLE TRACK

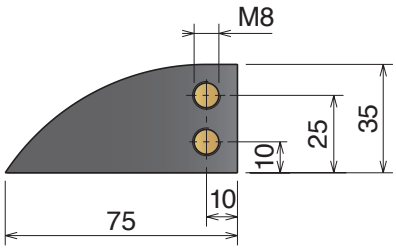

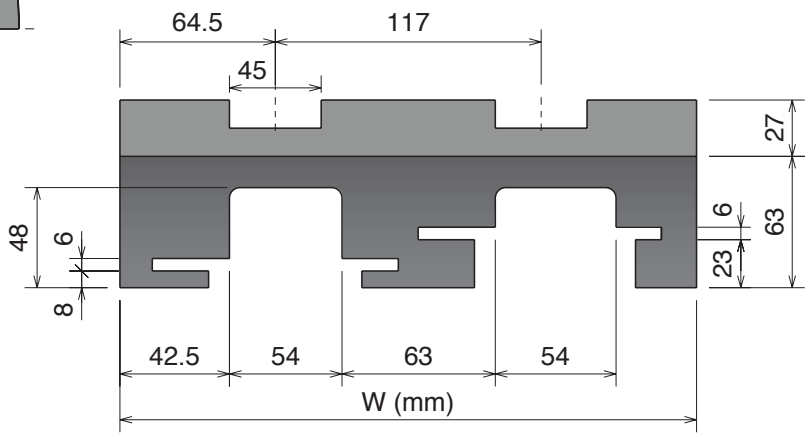

MULTI TRACK



Available in BluLub®

Magnetic System

Upper part available, on request, also in BluLub® and for abrasive applications.

Part	Article-Nr.	Tracks	W
731	73113610	1	129
731	73113620	2	246
731	73113630	3	363
731	73113640	4	480
731	73113650	5	597
731	73113660	6	714
731	73113670	7	831
731	73113680	8	948



Standard codes on table



add "**B**" for BluLub®



add "**C**" for abrasive

Part	Article-Nr.	Tracks	W
731	73113610RS	1	129
731	73113620RS	2	246
731	73113630RS	3	363
731	73113640RS	4	480
731	73113650RS	5	597
731	73113660RS	6	714
731	73113670RS	7	831
731	73113680RS	8	948



RS
add "**RS**" for RS-version

880-881 K750 *M61 Series*

Chain Reference	880 M - K750	881 M - K750

Curva Larghezza Base = 214 mm; Passo = 196 mm
Curve Basic Width = 214 mm; Pitch = 196 mm
Kurve Basisbreite = 214 mm; Teilung = 196 mm

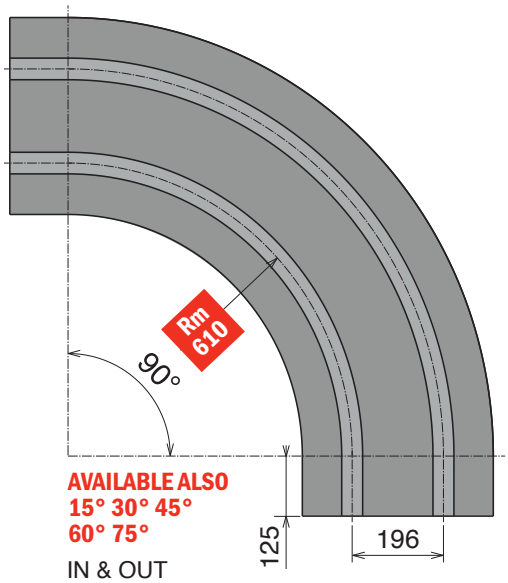

AVAILABLE ALSO
15° 30° 45°
60° 75°

IN & OUT
AVAILABLE ALSO
100 mm - 50 mm
without

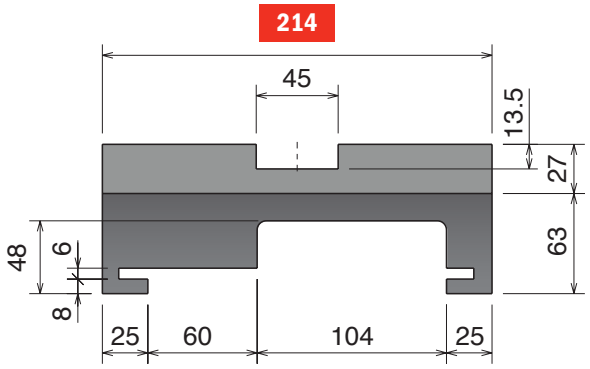

SINGLE TRACK

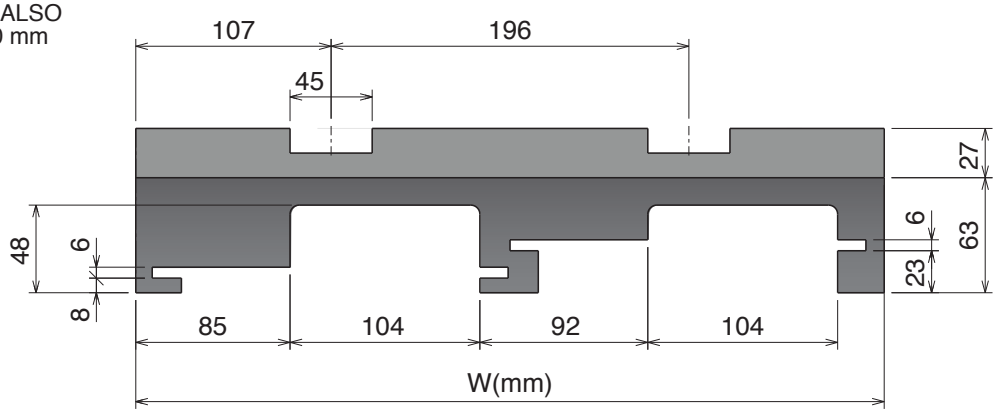

MULTI TRACK

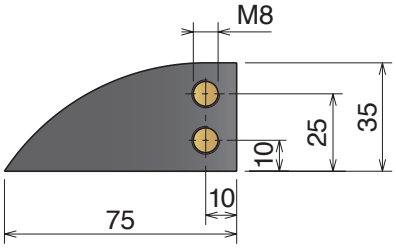



Available in
BluLube®

Magnetic System

Upper part available, on request, also in BluLube® and for abrasive applications.

Part	Article-Nr.	Tracks	W	Material
716	**71613615**	1	214	
716	**71613625**	2	410	
716	**71613635**	3	606	



Standard codes on table



add "**B**" for BluLube®



add "**C**" for abrasive

Part	Article-Nr.	Tracks	W	Material
716	**71613615RS**	1	214	
716	**71613625RS**	2	410	
716	**71613635RS**	3	606	



RS
add "**RS**" for RS-version

Materiale / Material / Materialien:
Polietilene UHMW-PE
Polyethylene UHMW-PE
Polyäthylen UHMW-PE

880-881 K750 M62/66/65 Series

Chain Reference	880 M - K750	881 M - K750

Curva Larghezza Base = 214 mm
Curve Basic Width = 214 mm
Kurve Basisbreite = 214 mm

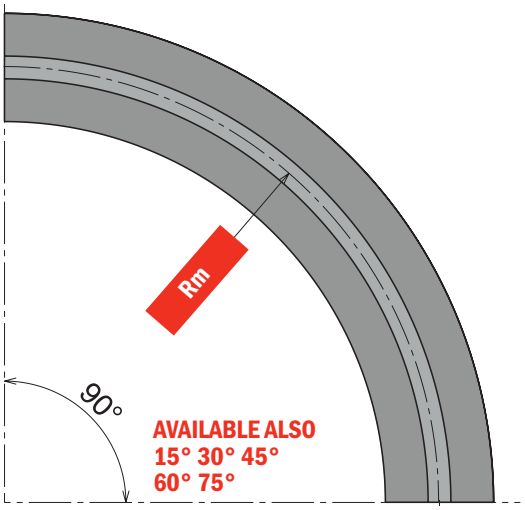

IN & OUT
AVAILABLE ALSO
125 mm - 100 mm - 50 mm

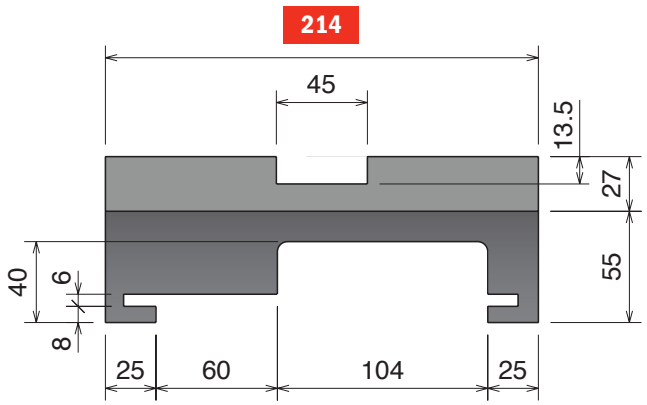



Available in BluLub®

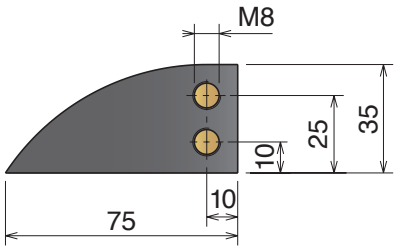

Magnetic System

Upper part available, on request, also in BluLub® and for abrasive applications.

Part	Article-Nr.	Tracks	W	R	Material
707	70716610	1	214	750	
707	70718610	1	214	860	
707	70719610	1	214	1000	


Standard codes on table


add "**B**" for BluLub®


add "**C**" for abrasive

Part	Article-Nr.	Tracks	W	R	Material
707	70716610RS	1	214	750	
707	70718610RS	1	214	860	
707	70719610RS	1	214	1000	


RS
add "**RS**" for RS-version

882-8857 K750 *M81 Series*

Chain Reference 882 M - K750

Curva Larghezza Base = 200 mm; Passo = 195 mm
Curve Basic Width = 200 mm; Pitch = 195 mm
Kurve Basisbreite = 200 mm; Teilung = 195 mm

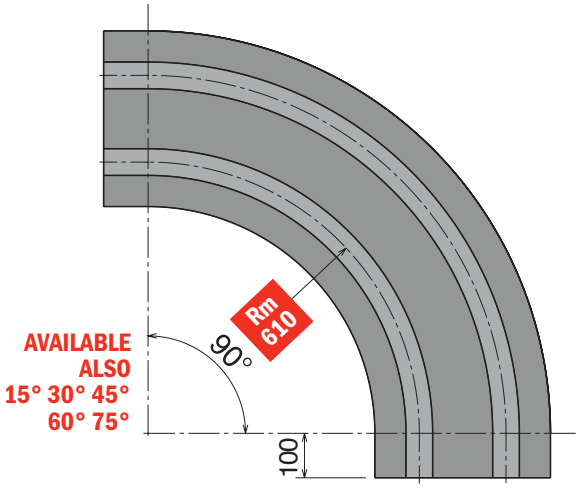

IN & OUT
AVAILABLE ALSO
125 mm - 50 mm - without

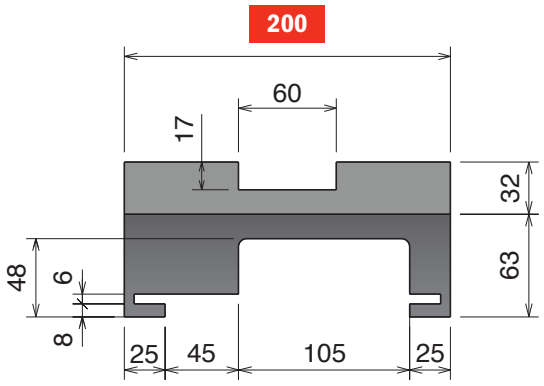

SINGLE TRACK

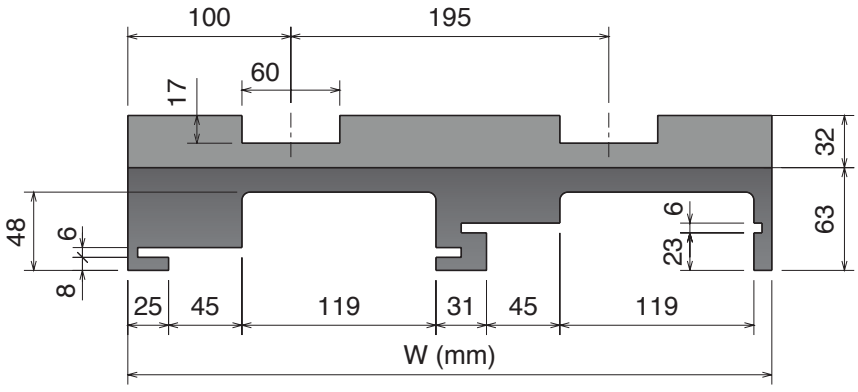

MULTI TRACK

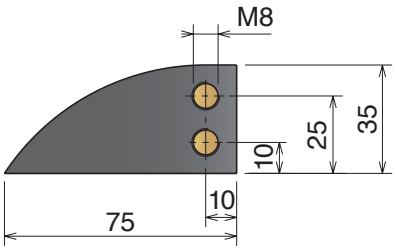

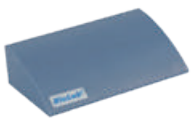

Available in BluLub®

Magnetic System

Upper part available, on request, also in BluLub® and for abrasive applications.

Part	Article-Nr.	Tracks	W	Material
717	71713614	1	200	
717	71713624	2	395	
717	71713634	3	590	
717	71713644	4	785	


Standard codes on table


add "**B**" for BluLub®


add "**C**" for abrasive

Part	Article-Nr.	Tracks	W	Material
717	71713614RS	1	200	
717	71713624RS	2	395	
717	71713634RS	3	590	
717	71713644RS	4	785	


RS
add "**RS**" for RS-version

Materiale / *Material* / *Materialien:*
Polietilene UHMW-PE
Polyethylene UHMW-PE
Polyäthylen UHMW-PE

882-8857 K750 *M85 Series*

Chain Reference	882 M - K750	8857 M - K750

Curva Larghezza Base = 200 mm; Passo = 195 mm
Curve Basic Width = 200 mm; Pitch = 195 mm
Kurve Basisbreite = 200 mm; Teilung = 195 mm

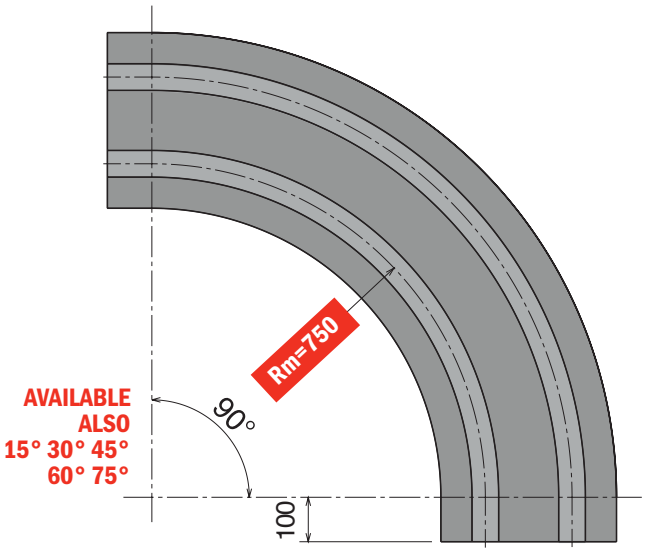

IN & OUT
AVAILABLE ALSO
125 mm - 50 mm - without

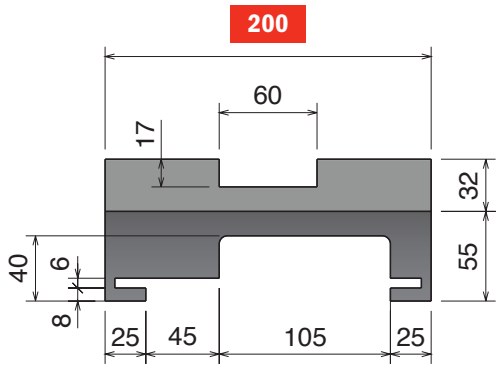

SINGLE TRACK

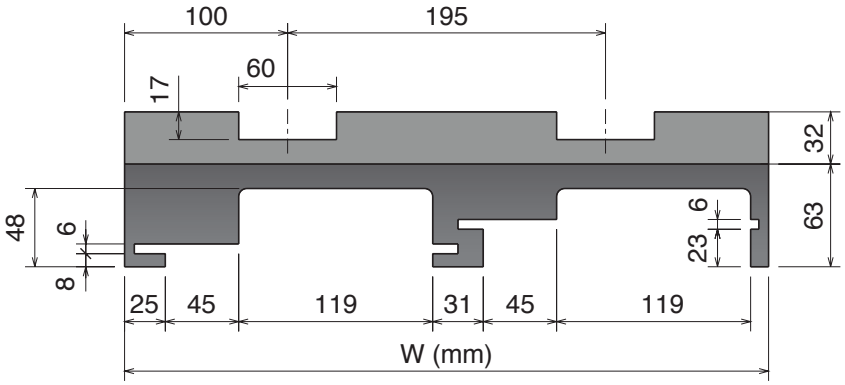

MULTI TRACK

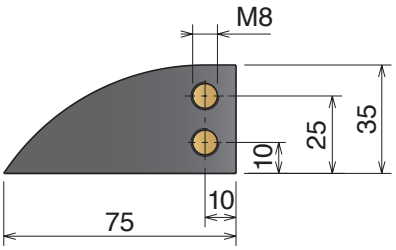



Available in
BluLub®

Magnetic System

Upper part available, on request, also in BluLub® and for abrasive applications.

Part	Article-Nr.	Tracks	W	Material
718	71816614	1	200	
718	71816624	2	395	
718	71816634	3	590	


Standard codes on table


add "**B**" for BluLub®


add "**C**" for abrasive

Part	Article-Nr.	Tracks	W	Material
718	71816614RS	1	200	
718	71816624RS	2	395	
718	71816634RS	3	590	


RS
add "**RS**" for RS-version

882-8857 K750 *M86 Series*

Chain Reference	882 M - K750	8857 M - K750

Curva Larghezza Base = 214 mm; Passo = 200 mm
Curve Basic Width = 214 mm; Pitch = 200 mm
Kurve Basisbreite = 214 mm; Teilung = 200 mm

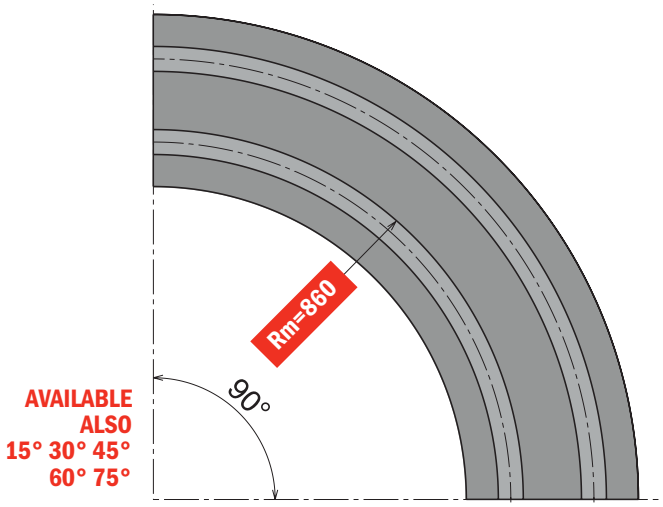

IN & OUT
AVAILABLE ALSO
125 mm
100 mm
50 mm

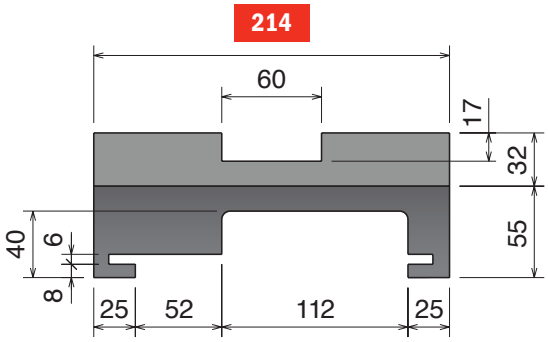

SINGLE TRACK

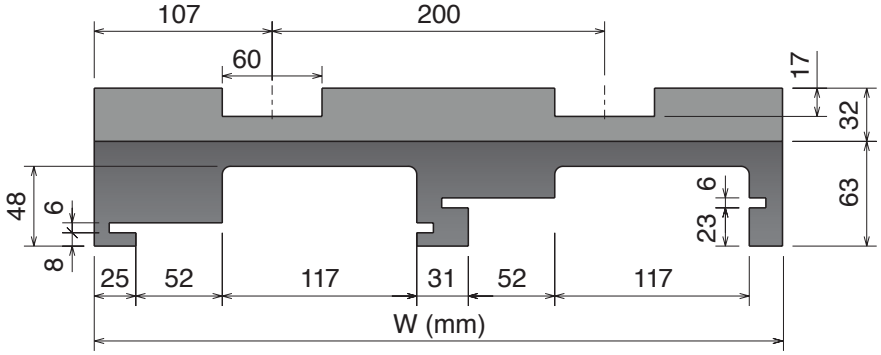

MULTI TRACK

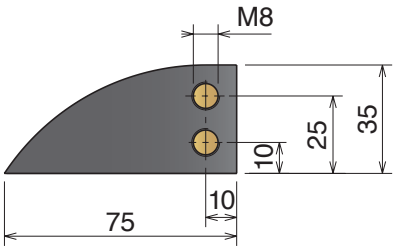

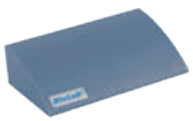

Available in
BluLub®

Magnetic System

Upper part available, on request, also in BluLub® and for abrasive applications.

Part	Article-Nr.	Tracks	W	Material
708	70818610	1	214	
708	70818620	2	414	
708	70818630	3	614	


Standard codes on table


add "**B**" for BluLub®


add "**C**" for abrasive

Part	Article-Nr.	Tracks	W	Material
708	70818610RS	1	214	
708	70818620RS	2	414	
708	70818630RS	3	614	


RS
add "**RS**" for RS-version

Materiale / Material / Materialien:
Polietilene UHMW-PE
Polyethylene UHMW-PE
Polyäthylen UHMW-PE

882-8857 K750 M80 Series

Chain Reference	882 M - K750	8857 M - K750

Curva Larghezza Base = 200 mm; Passo = 195 mm
Curve Basic Width = 200 mm; Pitch = 195 mm
Kurve Basisbreite = 200 mm; Teilung = 195 mm

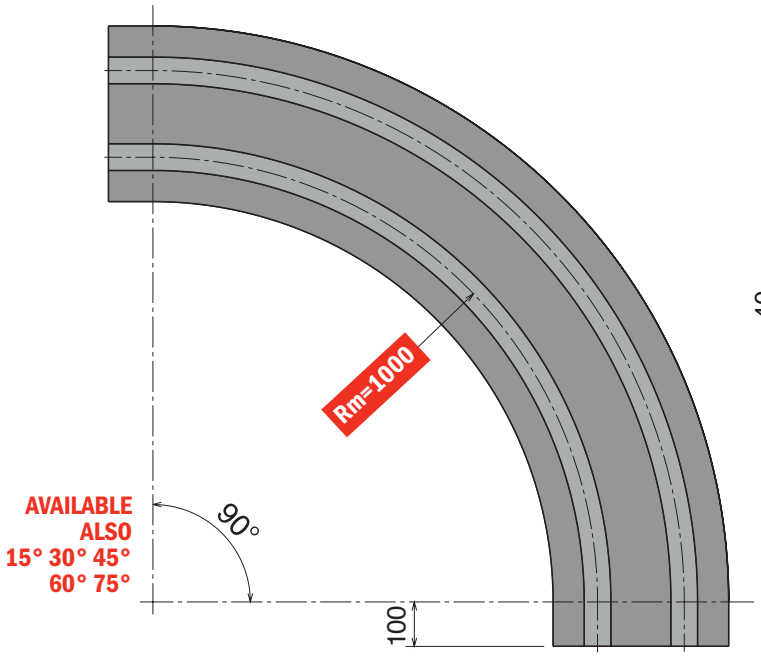

IN & OUT
AVAILABLE ALSO
125 mm - 50 mm - without

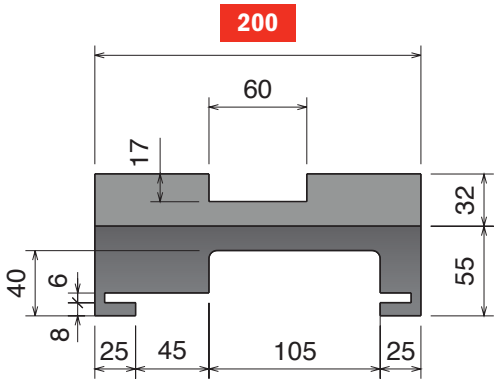

SINGLE TRACK

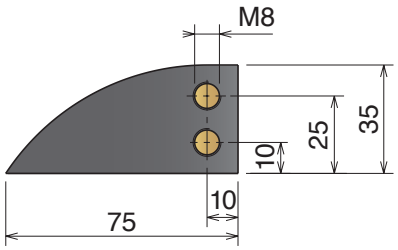

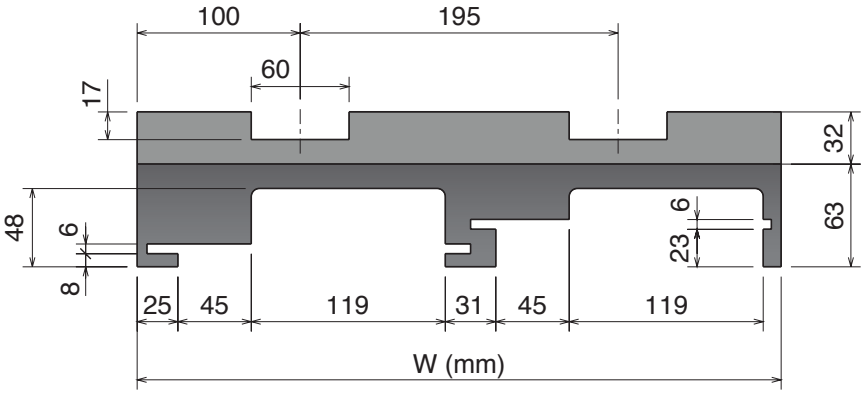

MULTI TRACK



Available in BluLub®

Magnetic System

Upper part available, on request, also in BluLub® and for abrasive applications.

Part	Article-Nr.	Tracks	W
719	71919614	1	200
719	71919624	2	395
719	71919634	3	590


Standard codes on table


add "**B**" for BluLub®


add "**C**" for abrasive

Part	Article-Nr.	Tracks	W
719	71919614RS	1	200
719	71919624RS	2	395
719	71919634RS	3	590


RS
add "**RS**" for RS-version

Movex®

882-8857 K1000 *M93/M94 Series*

Chain Reference	882 M - K1000	8857 M - K1000

Curva Larghezza Base = 270 mm
Curve Basic Width = 270 mm
Kurve Basisbreite = 270 mm

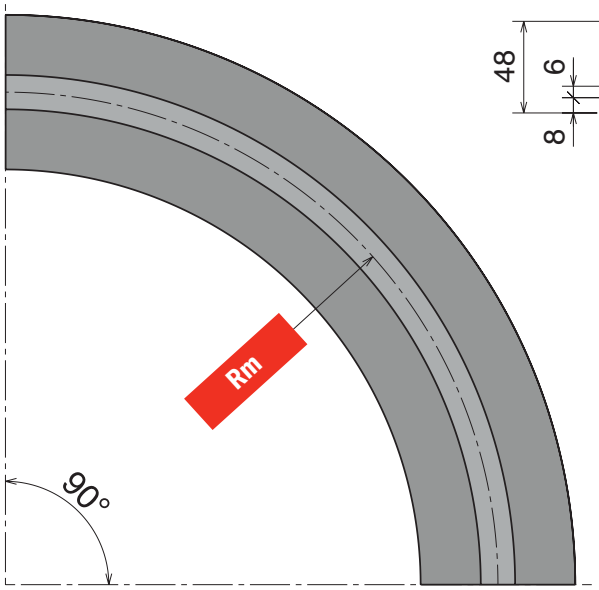

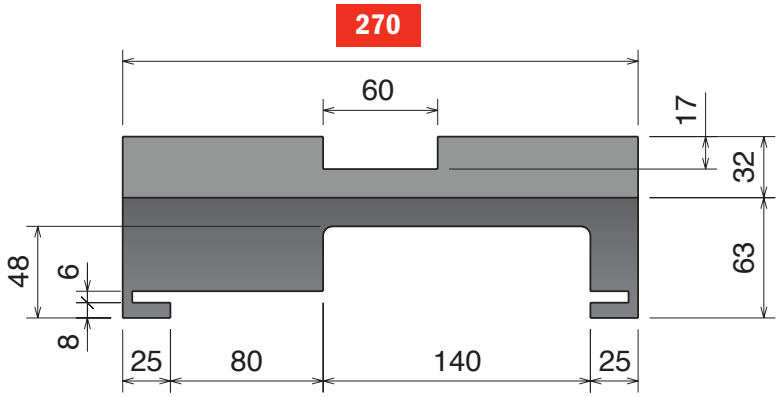

AVAILABLE ALSO
15° 30° 45°
60° 75°

IN & OUT
AVAILABLE ALSO
125 mm - 100 mm - 50 mm



Available in BluLub®

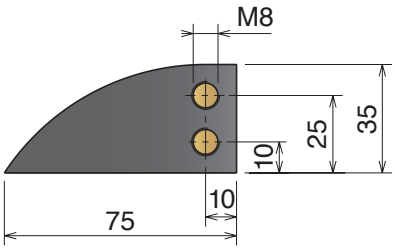

Magnetic System

Upper part available, on request, also in BluLub® and for abrasive applications.

Part	Article-Nr.	Tracks	Rm	W	Material
709	70918610	1	860	270	
709	70919610	1	1000	270	



Standard codes on table



add "**B**" for BluLub®



add "**C**" for abrasive

Part	Article-Nr.	Tracks	Rm	W	Material
709	70918610RS	1	860	270	
709	70919610RS	1	1000	270	



RS
add "**RS**" for RS-version

Materiale / Material / Materialien:
Polietilene UHMW-PE
Polyethylene UHMW-PE
Polyäthylen UHMW-PE

882-8857 K1200 M97/M98 Series

Chain Reference 882 M - K1200

Curva Larghezza Base = 320 mm
Curve Basic Width = 320 mm
Kurve Basisbreite = 320 mm

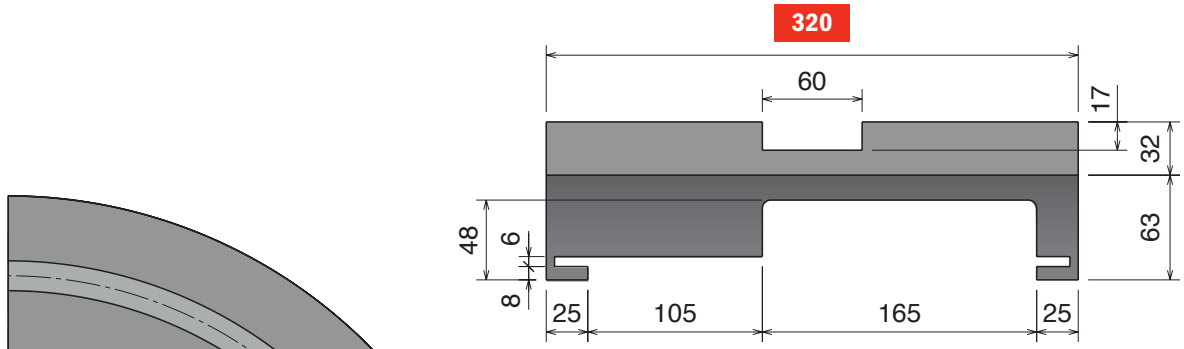

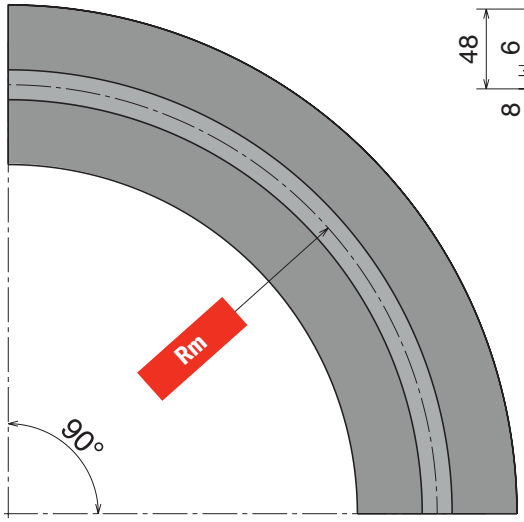

AVAILABLE ALSO
15° 30° 45°
60° 75°

IN & OUT
AVAILABLE ALSO
125 mm - 100 mm - 50 mm



Available in BluLub®

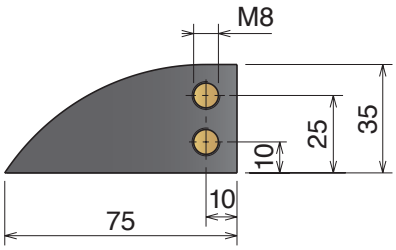

Magnetic System

Upper part available, on request, also in BluLub® and for abrasive applications.

Part	Article-Nr.	Tracks	Rm	W	Material
710	71018610	1	860	320	
710	71019610	1	1000	320	



Standard codes on table



add "**B**" for BluLub®



add "**C**" for abrasive

Part	Article-Nr.	Tracks	Rm	W	Material
710	71018610RS	1	860	320	
710	71019610RS	1	1000	320	



RS
add "**RS**" for RS-version

LBP 882 K750 *MP861 Series*

Chain Reference LBP 882 M - K750

Curva Larghezza Base = 214 mm
Curve Basic Width = 214 mm
Kurve Basisbreite = 214 mm

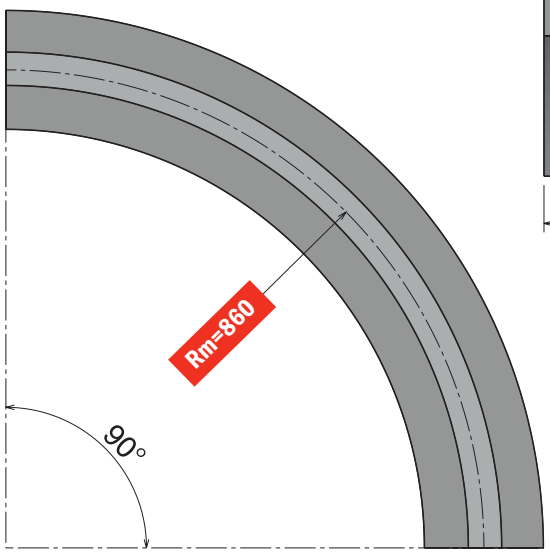

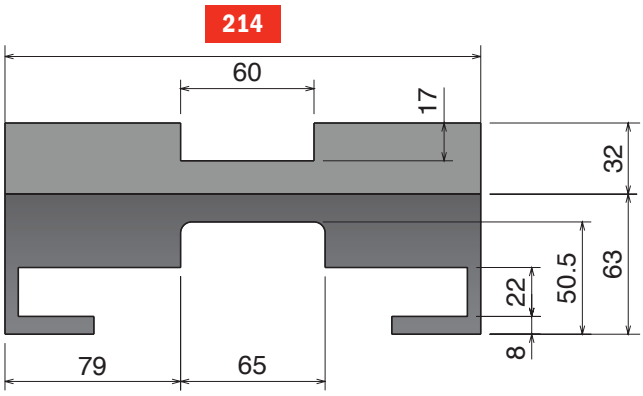

AVAILABLE ALSO
15° 30° 45°
60° 75°

IN & OUT
AVAILABLE ALSO
125 mm - 100 mm - 50 mm



Available in BluLub®

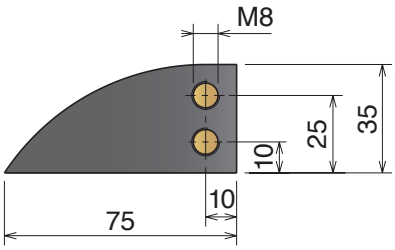

Magnetic System

Upper part available, on request, also in BluLub® and for abrasive applications.

Part	Article-Nr.	Tracks	W	Material
781	78118610	1	214	**Standard** codes on table
				add "**B**" for BluLub®
				add "**C**" for abrasive

Part	Article-Nr.	Tracks	W	Material
781	78118610RS	1	270	***RS*** add "**RS**" for RS-version

Materiale / Material / Materialien:
Polietilene UHMW-PE
Polyethylene UHMW-PE
Polyäthylen UHMW-PE

LBP 882 K1000 MP931/MP941 Series

Chain Reference LBP 882 M - K1000

Curva Larghezza Base = 270 mm
Curve Basic Width = 270 mm
Kurve Basisbreite = 270 mm

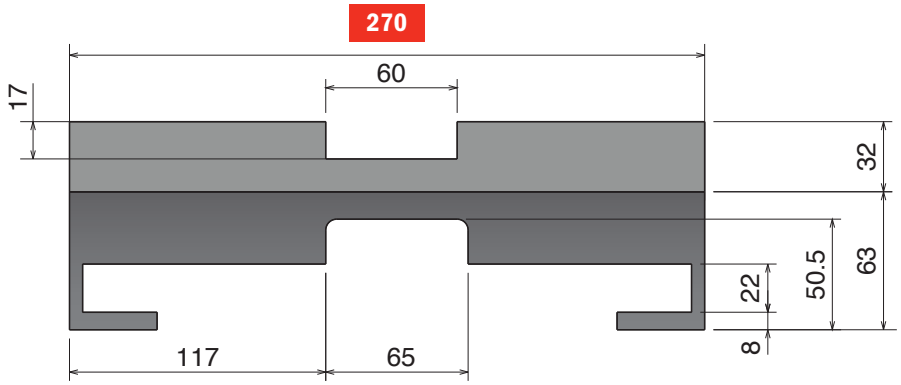

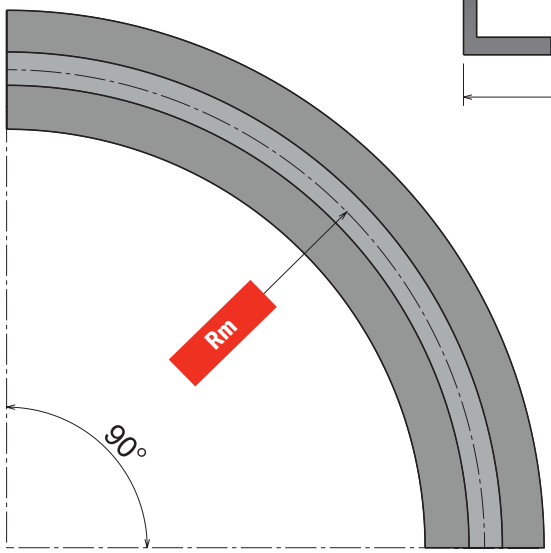

IN & OUT
AVAILABLE ALSO
125 mm - 100 mm - 50 mm



Available in BluLub®

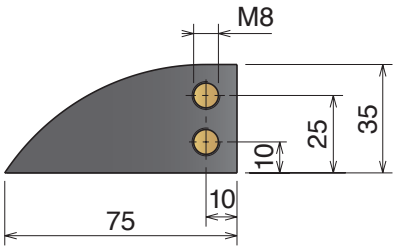

MP931 Series

Magnetic System

Upper part available, on request, also in BluLub® and for abrasive applications.

Part	α 15°	α 30°	α 45°	α 60°	α 75°	α 90°		Tracks	R	W
784	78418110	78418210	78418310	78418410	78418510	78418610		1	860	270
Material		**Standard** codes on table			add "**B**" for BluLub®		add "**C**" for abrasive			add "**RS**" for RS-version

MP941 Series

Part	α 15°	α 30°	α 45°	α 60°	α 75°	α 90°		Tracks	R	W
784	78419110	78419210	78419310	78419410	78419510	78419610		1	1000	270
Material		**Standard** codes on table			add "**B**" for BluLub®		add "**C**" for abrasive			add "**RS**" for RS-version

LBP 882 K1000 *MP91 Series*

Chain Reference LBP 882 M - K1000

Curva Larghezza Base = 290 mm
Curve Basic Width = 290 mm
Kurve Basisbreite = 290 mm

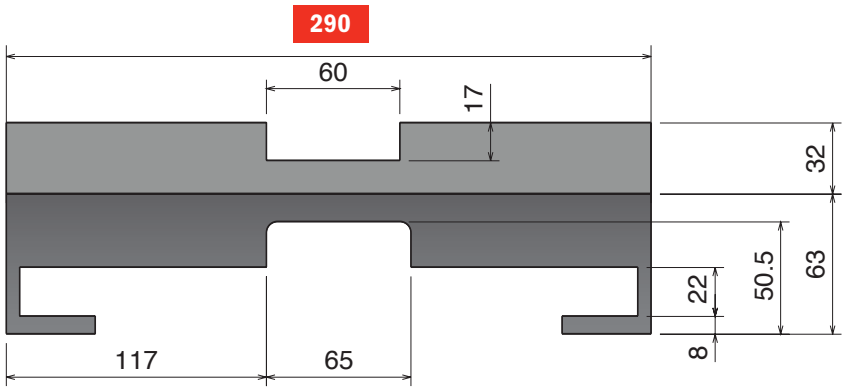

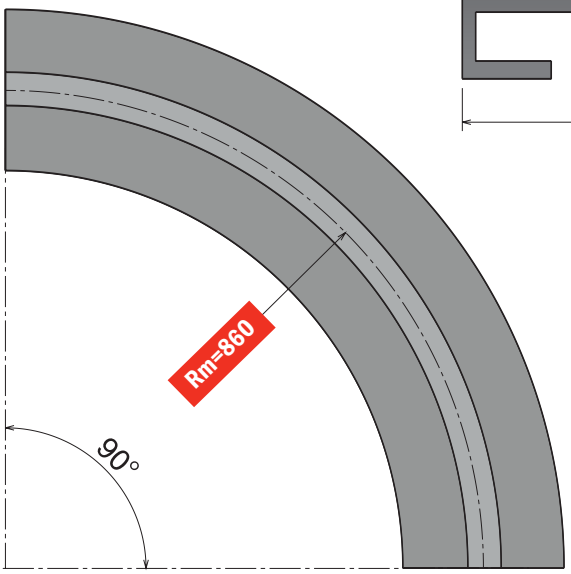

AVAILABLE ALSO
15° 30° 45°
60° 75°

IN & OUT
AVAILABLE ALSO
125 mm - 100 mm - 50 mm



Available in BluLub®

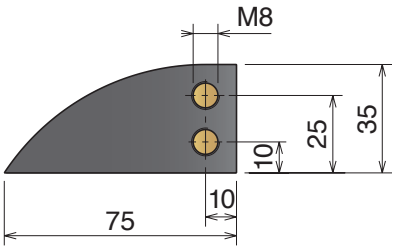

Magnetic System

Upper part available, on request, also in BluLub® and for abrasive applications.

Part	Article-Nr.	Tracks	W	Material
782	78218610	1	290	


Standard codes on table


add "**B**" for BluLub®


add "**C**" for abrasive

Part	Article-Nr.	Tracks	W	Material
782	78218610RS	1	290	


RS
add "**RS**" for RS-version

Materiale / Material / Materialien:
Polietilene UHMW-PE
Polyethylene UHMW-PE
Polyäthylen UHMW-PE

LBP 882 K1200 MP971/MP981 Series

Chain Reference LBP 882 M - K1200

Curva Larghezza Base = 340 mm
Curve Basic Width = 340 mm
Kurve Basisbreite = 340 mm

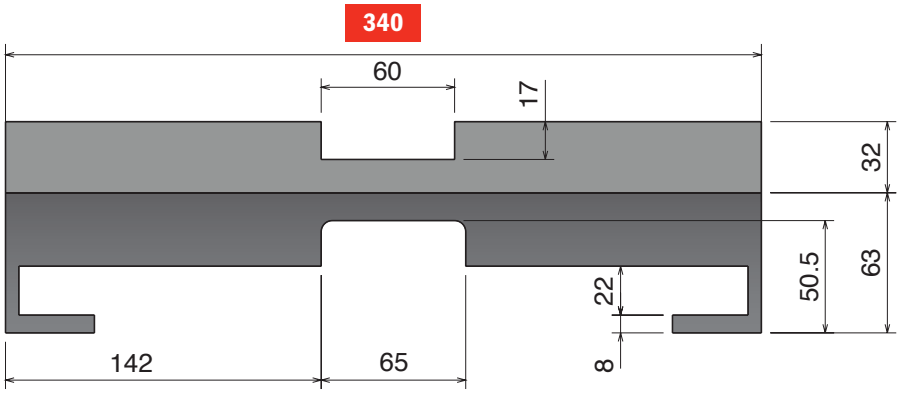

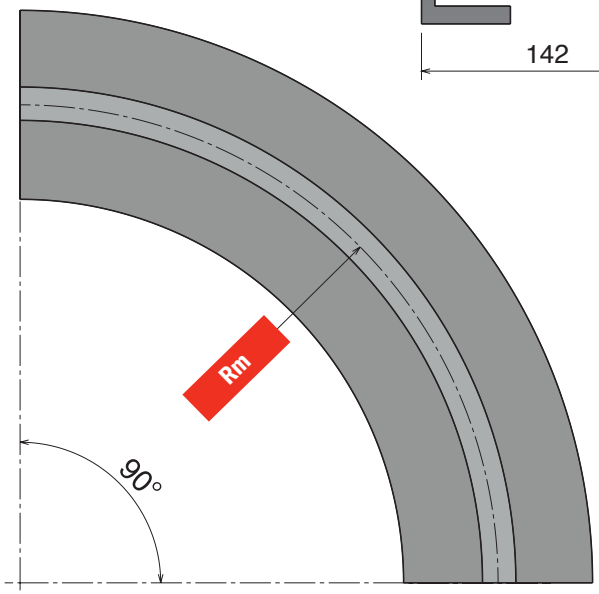

AVAILABLE ALSO
15° 30° 45°
60° 75°

IN & OUT
AVAILABLE ALSO
125 mm - 100 mm - 50 mm



Available in BluLub®

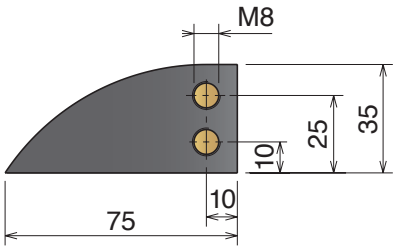

Magnetic System

Upper part available, on request, also in BluLub® and for abrasive applications.

Part	Article-Nr.	Tracks	Rm	W	Material
783	78318610	1	860	340	
783	78319610	1	1000	340	



Standard codes on table



add "**B**" for BluLub®



add "**C**" for abrasive

Part	Article-Nr.	Tracks	Rm	W	Material
783	78318610RS	1	860	340	
783	78319610RS	1	1000	340	



RS
add "**RS**" for RS-version

260 M *MB7 Series*

Chain Reference 260 M - K330

Curva Larghezza Base = 100 mm; Passo = 85 mm
Curve Basic Width = 100 mm; Pitch = 85 mm
Kurve Basisbreite = 100 mm; Teilung = 85 mm

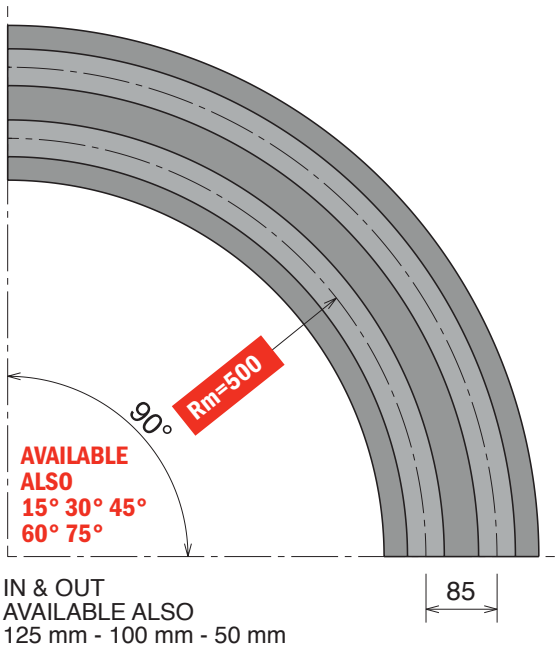

IN & OUT
AVAILABLE ALSO
125 mm - 100 mm - 50 mm

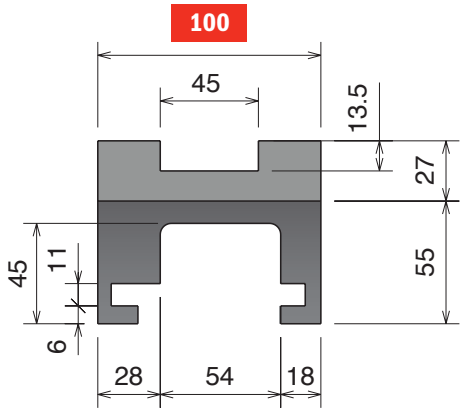

SINGLE TRACK

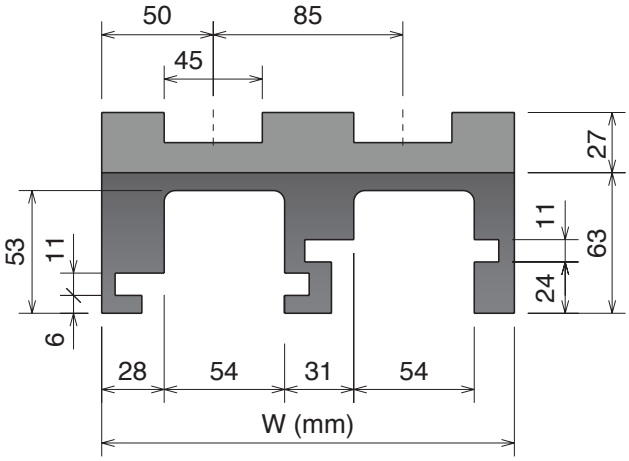

MULTI TRACK

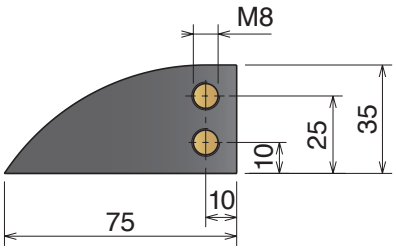

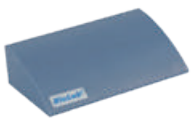

Available in
BluLub®

Magnetic System

Upper part available, on request, also in BluLub® and for abrasive applications.

Part	Article-Nr.	Tracks	W
705	70511610	1	100
705	70511620	2	185
705	70511630	3	270
705	70511640	4	355
705	70511650	5	440
705	70511660	6	525
705	70511670	7	610
705	70511680	8	695



Standard codes on table



add "**B**" for BluLub®



add "**C**" for abrasive

Part	Article-Nr.	Tracks	W
705	70511610RS	1	100
705	70511620RS	2	185
705	70511630RS	3	270
705	70511640RS	4	355
705	70511650RS	5	440
705	70511660RS	6	525
705	70511670RS	7	610
705	70511680RS	8	695



RS
add "**RS**" for RS-version

Materiale / *Material / Materialien:*
Polietilene UHMW-PE
Polyethylene UHMW-PE
Polyäthylen UHMW-PE

260 M *MB6 Series*

Chain Reference 260 M - K330

Curva Larghezza Base = 100 mm; Passo = 85 mm
Curve Basic Width = 100 mm; Pitch = 85 mm
Kurve Basisbreite = 100 mm; Teilung = 85 mm

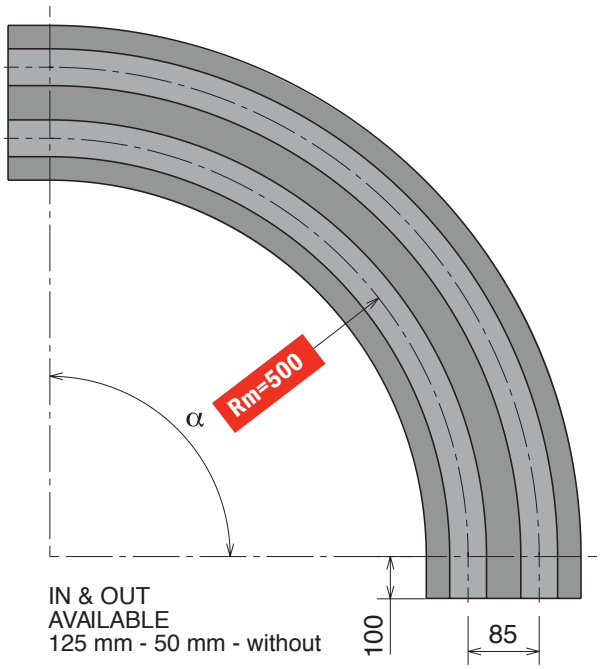

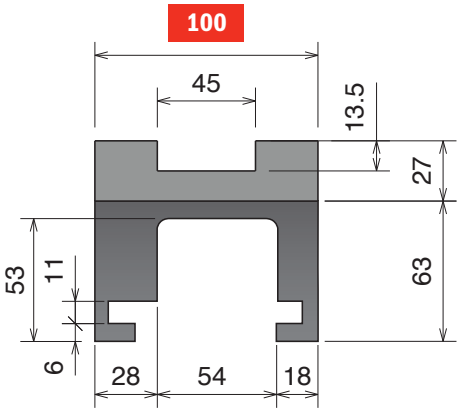

SINGLE TRACK

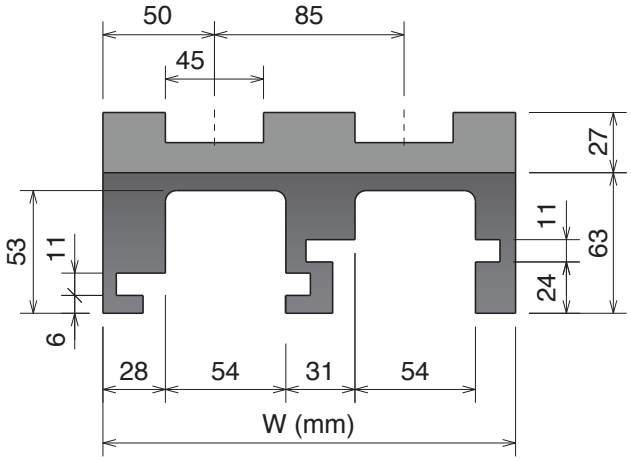

MULTI TRACK



Available in
BluLub®

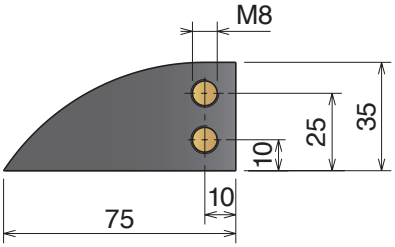

Magnetic System

Upper part available, on request, also in BluLub® and for abrasive applications.

Part	α 15°	α 30°	α 45°	α 60°	α 75°	α 90°	Tracks	W	Material
732	73211114	73211214	73211314	73211414	73211514	73211614	1	100	
732	73211124	73211224	73211324	73211424	73211524	73211624	2	185	
732	73211134	73211234	73211334	73211434	73211534	73211634	3	270	
732	73211144	73211244	73211344	73211444	73211544	73211644	4	355	
732	73211154	73211254	73211354	73211454	73211554	73211654	5	440	
732	73211164	73211264	73211364	73211464	73211564	73211664	6	525	
732	73211174	73211274	73211374	73211474	73211574	73211674	7	610	
732	73211184	73211284	73211384	73211484	73211584	73211684	8	695	

Standard codes on table

add "**B**" for BluLub®

add "**C**" for abrasive

Part	α 15°	α 30°	α 45°	α 60°	α 75°	α 90°	Tracks	W	Material
732	73211114RS	73211214RS	73211314RS	73211414RS	73211514RS	73211614RS	1	100	
732	73211124RS	73211224RS	73211324RS	73211424RS	73211524RS	73211624RS	2	185	
732	73211134RS	73211234RS	73211334RS	73211434RS	73211534RS	73211634RS	3	270	
732	73211144RS	73211244RS	73211344RS	73211444RS	73211544RS	73211644RS	4	355	
732	73211154RS	73211254RS	73211354RS	73211454RS	73211554RS	73211654RS	5	440	
732	73211164RS	73211264RS	73211364RS	73211464RS	73211564RS	73211664RS	6	525	
732	73211174RS	73211274RS	73211374RS	73211474RS	73211574RS	73211674RS	7	610	
732	73211184RS	73211284RS	73211384RS	73211484RS	73211584RS	73211684RS	8	695	

RS
add "**RS**" for RS-version

260 M *MB4 Series*

Chain Reference 260 M - K330

Curva Larghezza Base = 111 mm; Passo = 85 mm
Curve Basic Width = 111 mm; Pitch = 85 mm
Kurve Basisbreite = 111 mm; Teilung = 85 mm

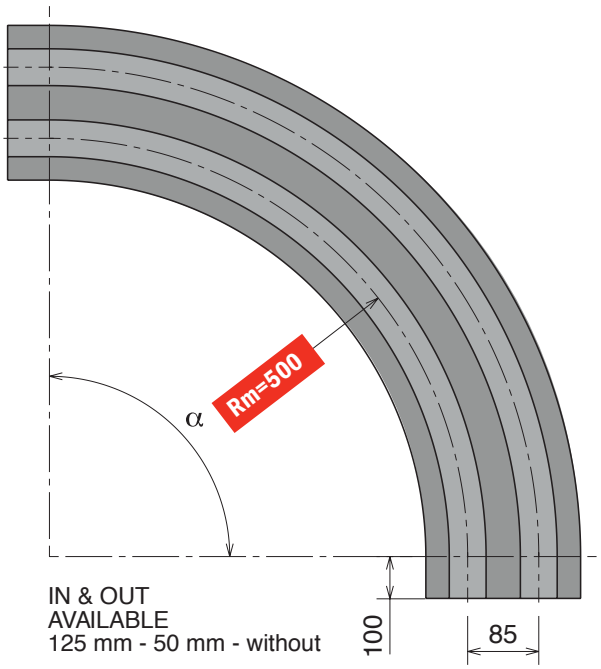

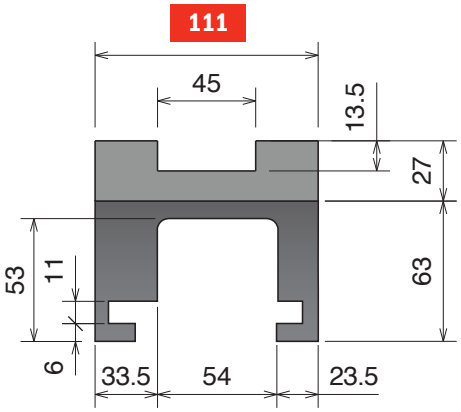

SINGLE TRACK

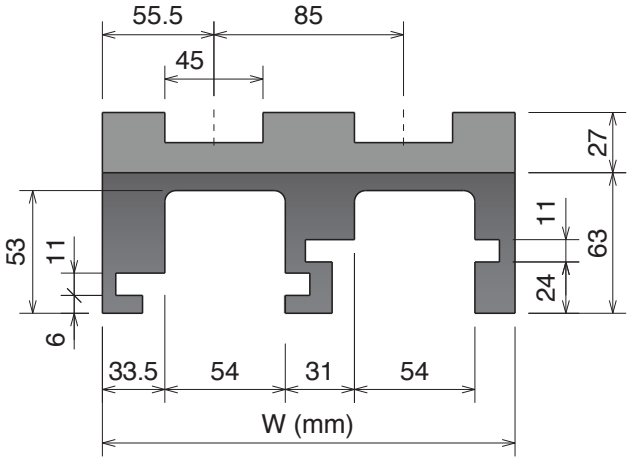

MULTI TRACK



Available in
BluLub®

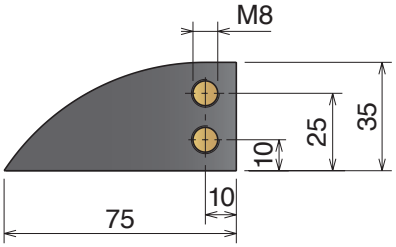

Magnetic System

Upper part available, on request, also in BluLub® and for abrasive applications.

Part	α 15°	α 30°	α 45°	α 60°	α 75°	α 90°	Tracks	W
733	73311114	73311214	73311314	73311414	73311514	73311614	1	111
733	73311124	73311224	73311324	73311424	73311524	73311624	2	196
733	73311134	73311234	73311334	73311434	73311534	73311634	3	281
733	73311144	73311244	73311344	73311444	73311544	73311644	4	366
733	73311154	73311254	73311354	73311454	73311554	73311654	5	451
733	73311164	73311264	73311364	73311464	73311564	73311664	6	536
733	73311174	73311274	73311374	73311474	73311574	73311674	7	621
733	73311184	73311284	73311384	73311484	73311584	73311684	8	706

Material



Standard codes on table



add "**B**" for BluLub®



add "**C**" for abrasive

Part	α 15°	α 30°	α 45°	α 60°	α 75°	α 90°	Tracks	W
733	73311114RS	73311214RS	73311314RS	73311414RS	73311514RS	73311614RS	1	111
733	73311124RS	73311224RS	73311324RS	73311424RS	73311524RS	73311624RS	2	196
733	73311134RS	73311234RS	73311334RS	73311434RS	73311534RS	73311634RS	3	281
733	73311144RS	73311244RS	73311344RS	73311444RS	73311544RS	73311644RS	4	366
733	73311154RS	73311254RS	73311354RS	73311454RS	73311554RS	73311654RS	5	451
733	73311164RS	73311264RS	73311364RS	73311464RS	73311564RS	73311664RS	6	536
733	73311174RS	73311274RS	73311374RS	73311474RS	73311574RS	73311674RS	7	621
733	73311184RS	73311284RS	73311384RS	73311484RS	73311584RS	73311684RS	8	706

Material



RS
add "**RS**" for RS-version

Materiale / *Material / Materialien:*
Polietilene UHMW-PE
Polyethylene UHMW-PE
Polyäthylen UHMW-PE

260 M *MB8 Series*

Chain Reference 260 M - K330

Curva Larghezza Base = 100 mm; Passo = 85 mm
Curve Basic Width = 100 mm; Pitch = 85 mm
Kurve Basisbreite = 100 mm; Teilung = 85 mm

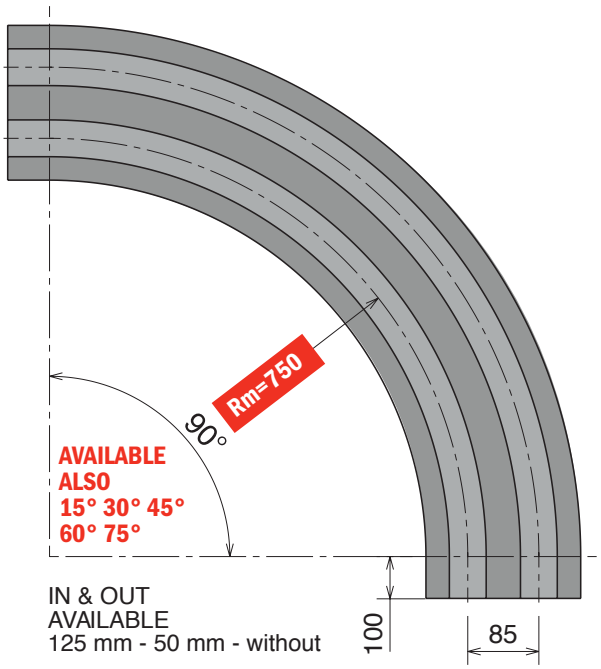



Available in
BluLub®

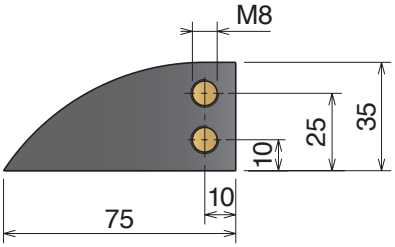

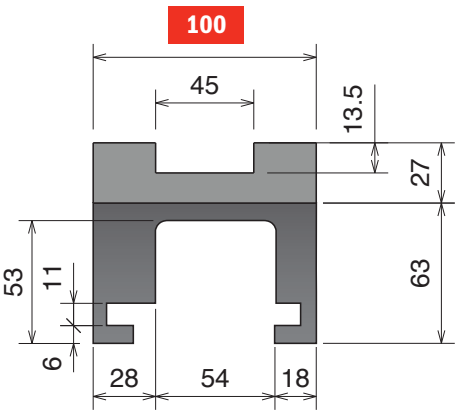

SINGLE TRACK

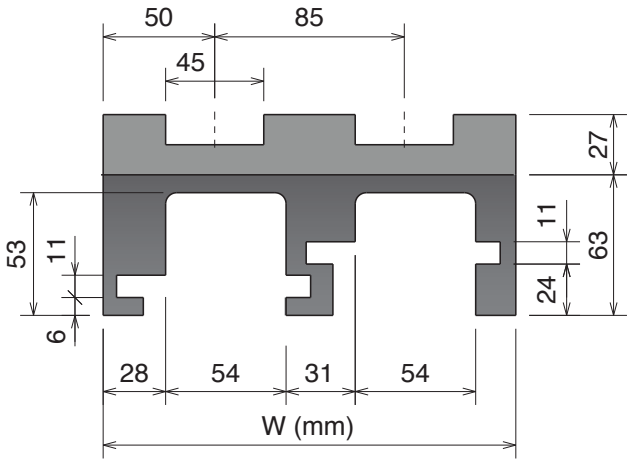

MULTI TRACK

Magnetic System

Upper part available, on request, also in BluLub® and for abrasive applications.

Part	Article-Nr.	Tracks	W
732	73216614	1	100
732	73216624	2	185
732	73216634	3	270
732	73216644	4	355
732	73216654	5	440
732	73216664	6	525
732	73216674	7	610
732	73216684	8	695



Standard codes on table



add "**B**" for BluLub®



add "**C**" for abrasive

Part	Article-Nr.	Tracks	W
732	73216614RS	1	100
732	73216624RS	2	185
732	73216 634RS	3	270
732	73216644RS	4	355
732	73216654RS	5	440
732	73216664RS	6	525
732	73216674RS	7	610
732	73216684RS	8	695



RS
add "**RS**" for RS-version

Movex®

260 M *MB5D Series*

Chain Reference 260 M - K330

Curva Larghezza Base = 100 mm; Passo = 85 mm
Curve Basic Width = 100 mm; Pitch = 85 mm
Kurve Basisbreite = 100 mm; Teilung = 85 mm

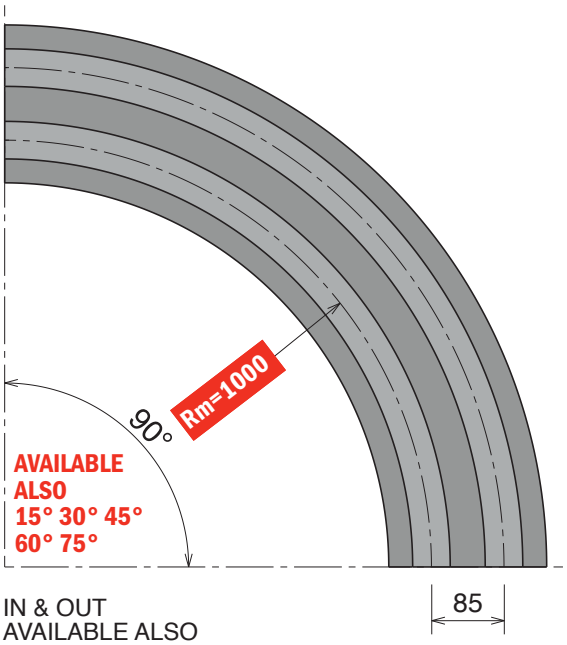

IN & OUT
AVAILABLE ALSO
125 mm - 100 mm - 50 mm



Available in BluLub®

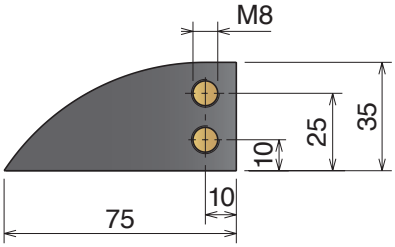

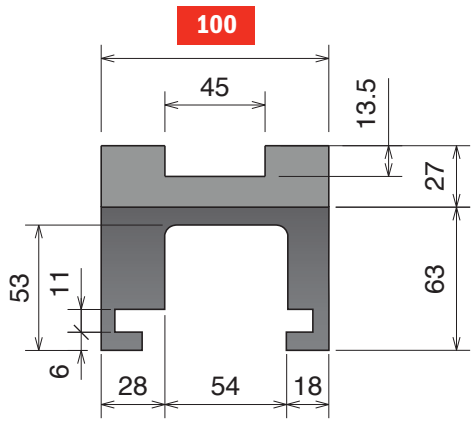

SINGLE TRACK

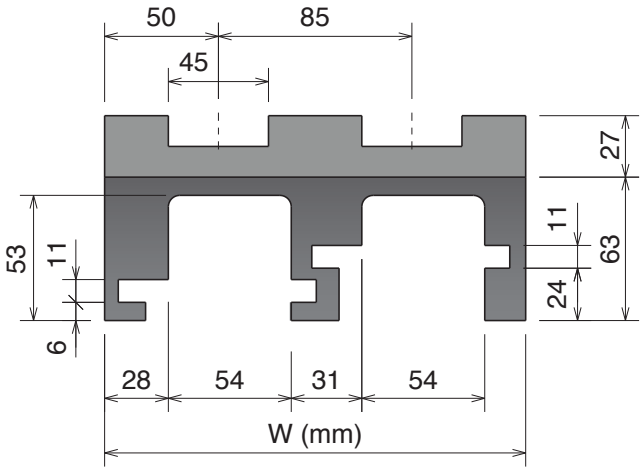

MULTI TRACK

Magnetic System

Upper part available, on request, also in BluLub® and for abrasive applications.

Part	Article-Nr.	Tracks	W
732	73219610	1	100
732	73219620	2	185
732	73219630	3	270
732	73219640	4	355
732	73219650	5	440
732	73219660	6	525
732	73219670	7	610
732	73219680	8	695



Standard codes on table



add "**B**" for BluLub®



add "**C**" for abrasive

Part	Article-Nr.	Tracks	W
732	73219610RS	1	100
732	73219620RS	2	185
732	73219630RS	3	270
732	73219640RS	4	355
732	73219650RS	5	440
732	73219660RS	6	525
732	73219670RS	7	610
732	73219680RS	8	695



RS
add "**RS**" for RS-version

Materiale / Material / Materialien:
Polietilene UHMW-PE
Polyethylene UHMW-PE
Polyäthylen UHMW-PE

260 M K450 MB22 Series

Chain Reference 260 M - K450

Curva Larghezza Base = 129 mm; Passo = 117 mm
Curve Basic Width = 129 mm; Pitch = 117 mm
Kurve Basisbreite = 129 mm; Teilung = 117 mm

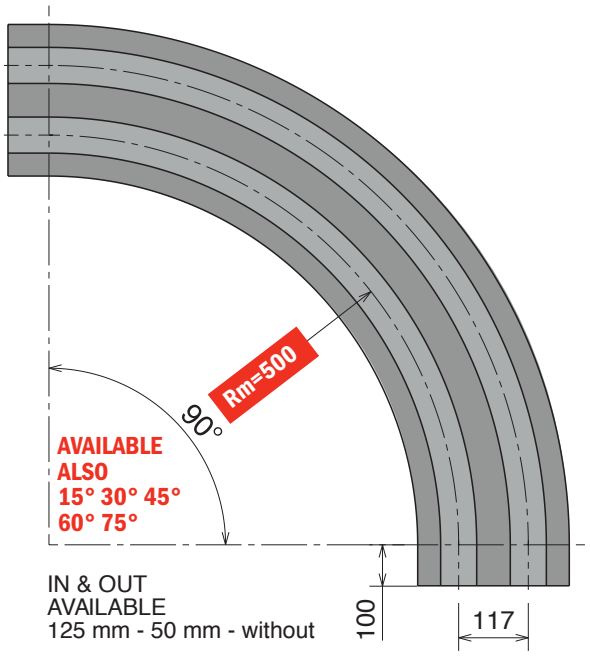



Available in BluLub®

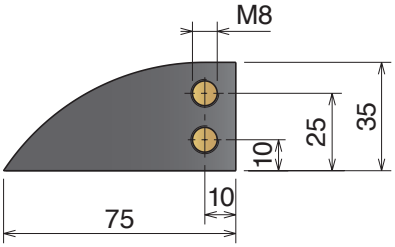

129

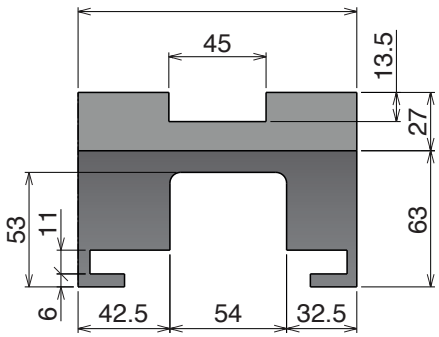

SINGLE TRACK

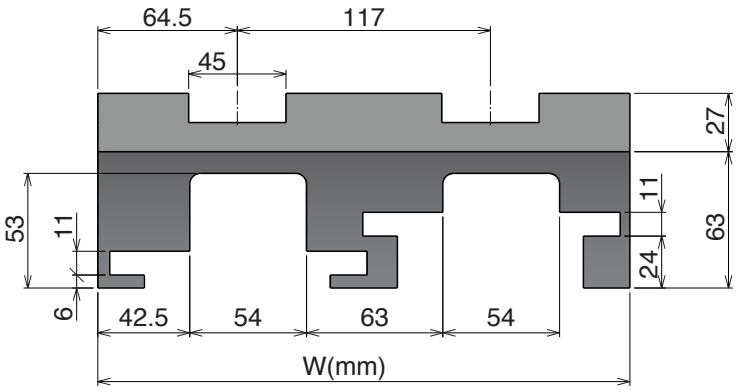

MULTI TRACK

Magnetic System

Upper part available, on request, also in BluLub® and for abrasive applications.

Part	Article-Nr.	Tracks	W
734	73411614	1	129
734	73411624	2	246
734	73411634	3	363
734	73411644	4	480



Standard codes on table



add "**B**" for BluLub®



add "**C**" for abrasive

Part	Article-Nr.	Tracks	W
734	73411614RS	1	129
734	73411624RS	2	246
734	73411634RS	3	363
734	73411644RS	4	480



RS
add "**RS**" for RS-version

260 M K450 *MB27 Series*

Chain Reference 260 M - K450

Curva Larghezza Base = 129 mm; Passo = 117 mm
Curve Basic Width = 129 mm; Pitch = 117 mm
Kurve Basisbreite = 129 mm; Teilung = 117 mm

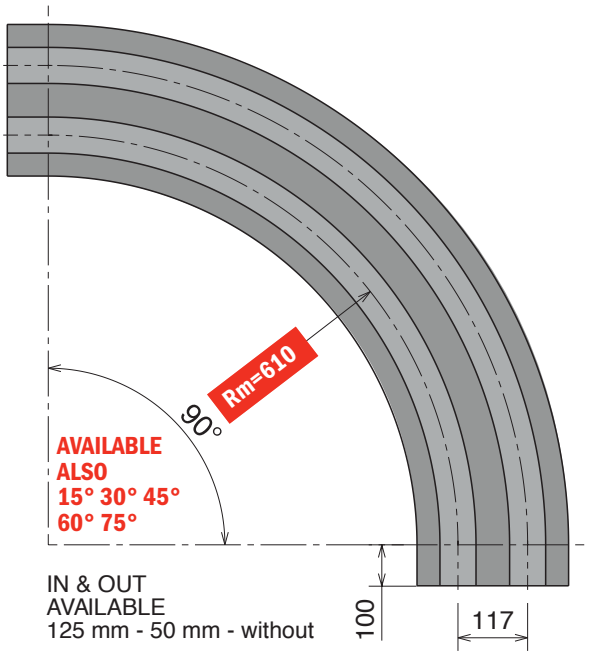



Available in
BluLub®

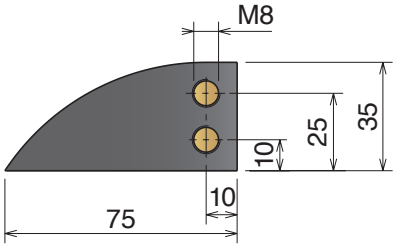

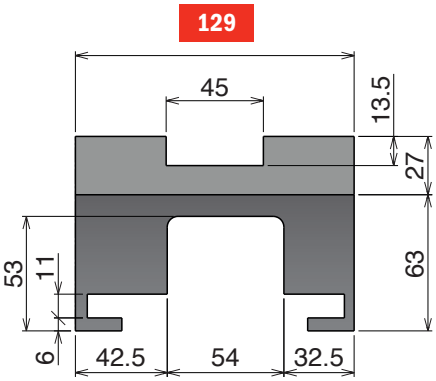

SINGLE TRACK

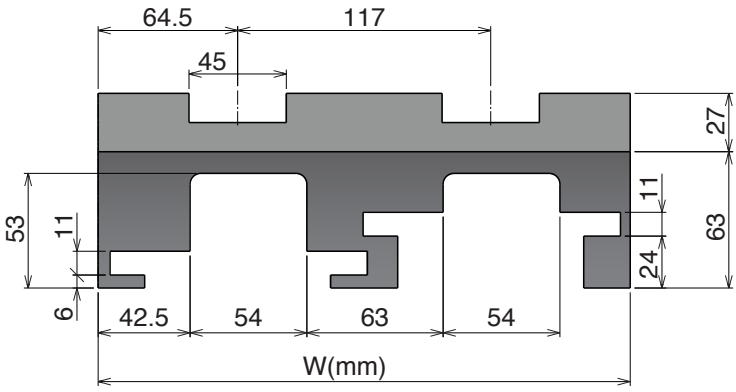

MULTI TRACK

Magnetic System

Upper part available, on request, also in BluLub® and for abrasive applications.

Part	Article-Nr.	Tracks	W
734	**73413614**	1	129
734	**73413624**	2	246
734	**73413634**	3	363
734	**73413644**	4	480



Standard codes on table



add "**B**" for BluLub®



add "**C**" for abrasive

Part	Article-Nr.	Tracks	W
734	**73413614RS**	1	129
734	**73413624RS**	2	246
734	**73413634RS**	3	363
734	**73413644RS**	4	480



RS
add "**RS**" for RS-version

Materiale / *Material / Materialien:*
Polietilene UHMW-PE
Polyethylene UHMW-PE
Polyäthylen UHMW-PE

261 M MC7 Series

Chain Reference 261 M - K330

Curva Larghezza Base = 100 mm; Passo = 85 mm
Curve Basic Width = 100 mm; Pitch = 85 mm
Kurve Basisbreite = 100 mm; Teilung = 85 mm

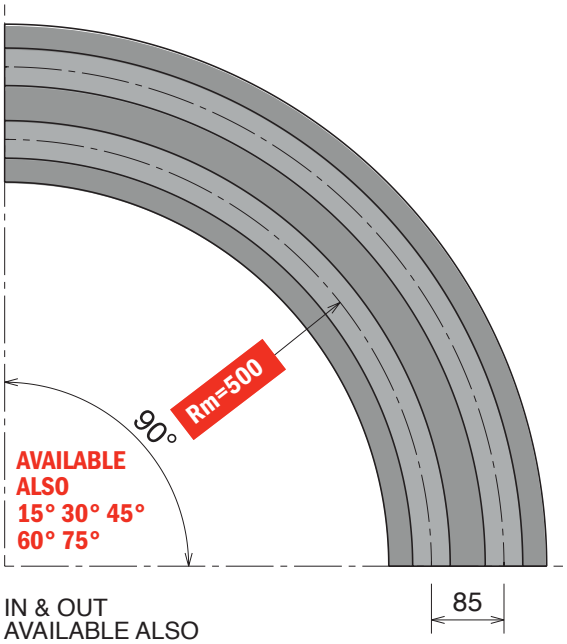

IN & OUT
AVAILABLE ALSO
125 mm - 100 mm - 50 mm



Available in
BluLub®

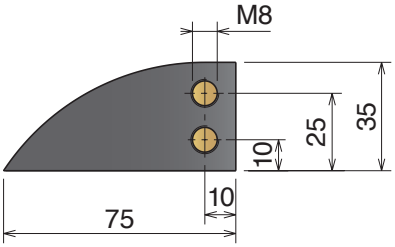

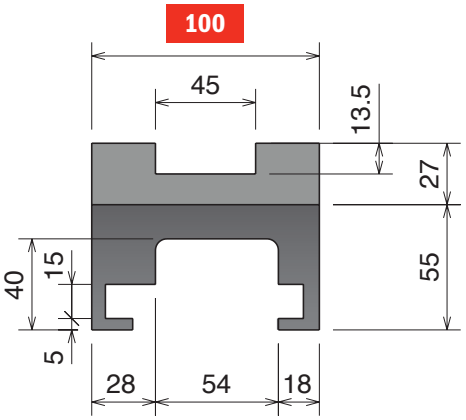

SINGLE TRACK

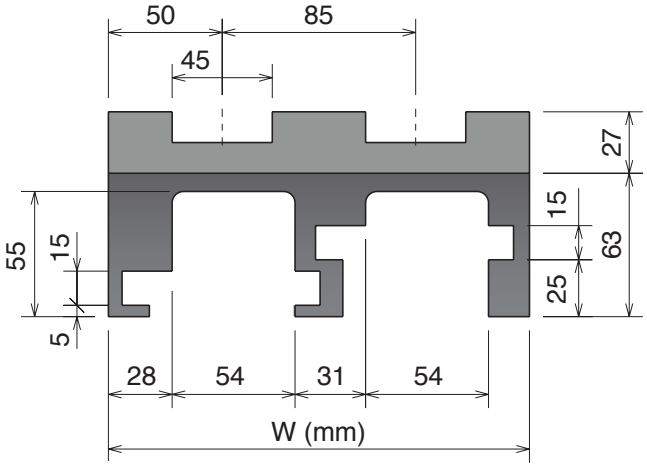

MULTI TRACK

Magnetic System

Upper part available, on request, also in BluLub® and for abrasive applications.

Part	Article-Nr.	Tracks	W	Material
706	70611610	1	100	
706	70611620	2	185	
706	70611630	3	270	
706	70611640	4	355	
706	70611650	5	440	
706	70611660	6	525	
706	70611670	7	610	
706	70611680	8	695	


Standard codes on table


add "**B**" for BluLub®


add "**C**" for abrasive

Part	Article-Nr.	Tracks	W	Material
706	70611610RS	1	100	
706	70611620RS	2	185	
706	70611630RS	3	270	
706	70611640RS	4	355	
706	70611650RS	5	440	
706	70611660RS	6	525	
706	70611670RS	7	610	
706	70611680RS	8	695	


RS
add "**RS**" for RS-version

Movex®

261 M *MC6 Series*

Chain Reference 261 M - K330

Curva Larghezza Base = 100 mm; Passo = 85 mm
Curve Basic Width = 100 mm; Pitch = 85 mm
Kurve Basisbreite = 100 mm; Teilung = 85 mm

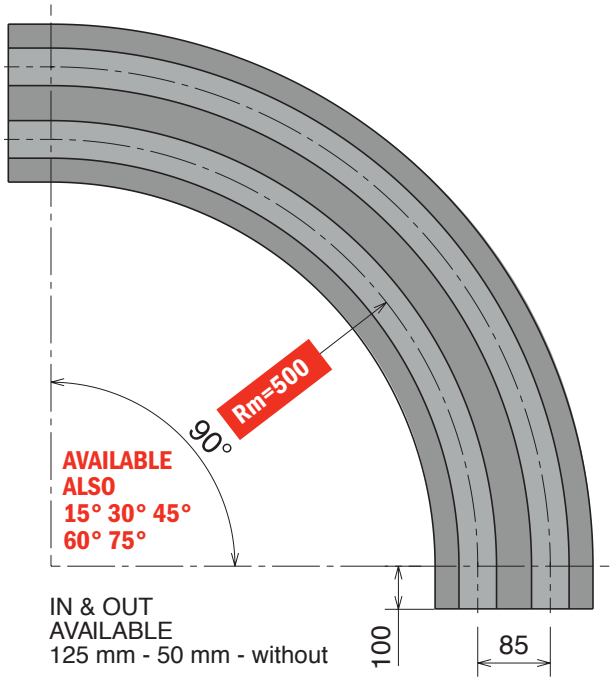



Available in
BluLub®

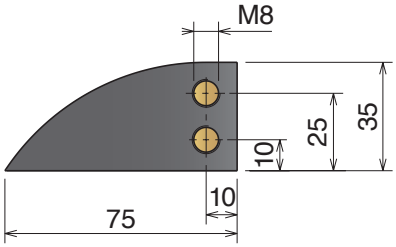

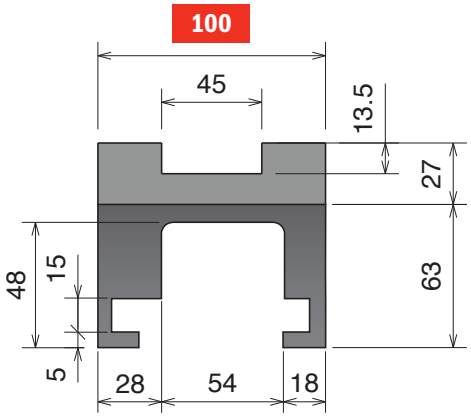

SINGLE TRACK

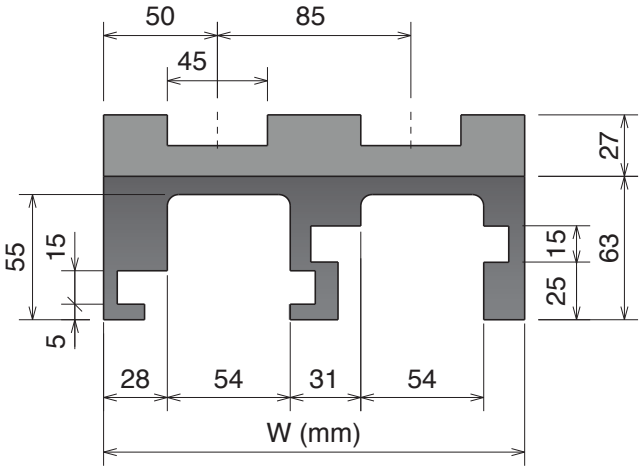

MULTI TRACK

Magnetic System

Upper part available, on request, also in BluLub® and for abrasive applications.

Part	Article-Nr.	Tracks	W
706	70611614	1	100
706	70611624	2	185
706	70611634	3	270
706	70611644	4	355
706	70611654	5	440
706	70611664	6	525
706	70611674	7	610
706	70611684	8	695

Standard codes on table

add "**B**" for BluLub®

add "**C**" for abrasive

Part	Article-Nr.	Tracks	W
706	70611614RS	1	100
706	70611624RS	2	185
706	70611634RS	3	270
706	70611644RS	4	355
706	70611654RS	5	440
706	70611664RS	6	525
706	70611674RS	7	610
706	70611684RS	8	695

RS
add "**RS**" for RS-version

Materiale / *Material / Materialien:*
Polietilene UHMW-PE
Polyethylene UHMW-PE
Polyäthylen UHMW-PE

261 M MC4 Series

Chain Reference 261 M - K330

Curva Larghezza Base = 111 mm; Passo = 85 mm
Curve Basic Width = 111 mm; Pitch = 85 mm
Kurve Basisbreite = 111 mm; Teilung = 85 mm

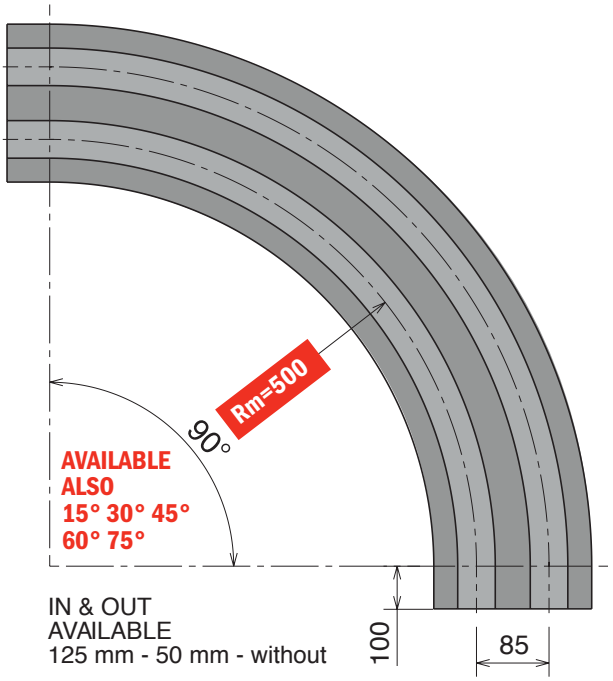



Available in BluLub®

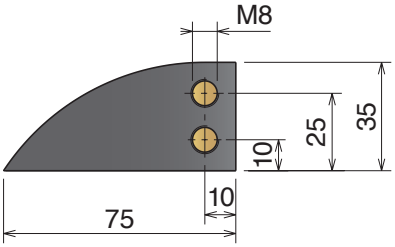

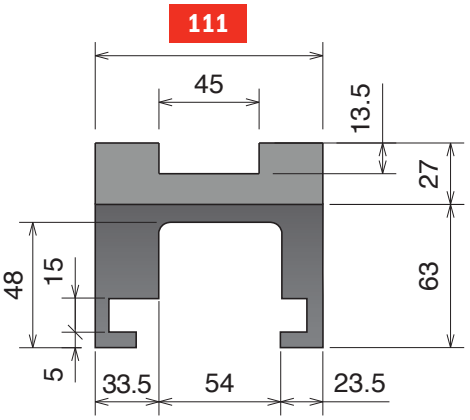

SINGLE TRACK

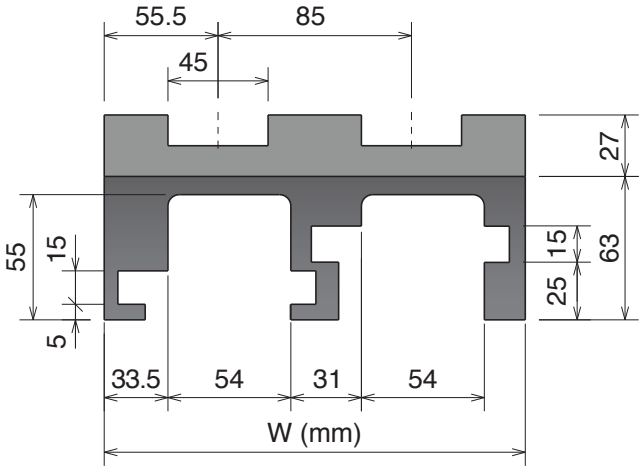

MULTI TRACK

Magnetic System

Upper part available, on request, also in BluLub® and for abrasive applications.

Part	Article-Nr.	Tracks	W
735	73511614	1	111
735	73511624	2	196
735	73511634	3	281
735	73511644	4	366
735	73511654	5	451
735	73511664	6	536
735	73511674	7	621
735	73511684	8	706

Standard codes on table

add "**B**" for BluLub®

add "**C**" for abrasive

Part	Article-Nr.	Tracks	W
735	73511614RS	1	111
735	73511624RS	2	196
735	73511634RS	3	281
735	73511644RS	4	366
735	73511654RS	5	451
735	73511664RS	6	536
735	73511674RS	7	621
735	73511684RS	8	706

RS
add "**RS**" for RS-version

Movex®

261 M *MC8 Series*

Chain Reference 261 M - K330

Curva Larghezza Base = 100 mm; Passo = 85 mm
Curve Basic Width = 100 mm; Pitch = 85 mm
Kurve Basisbreite = 100 mm; Teilung = 85 mm

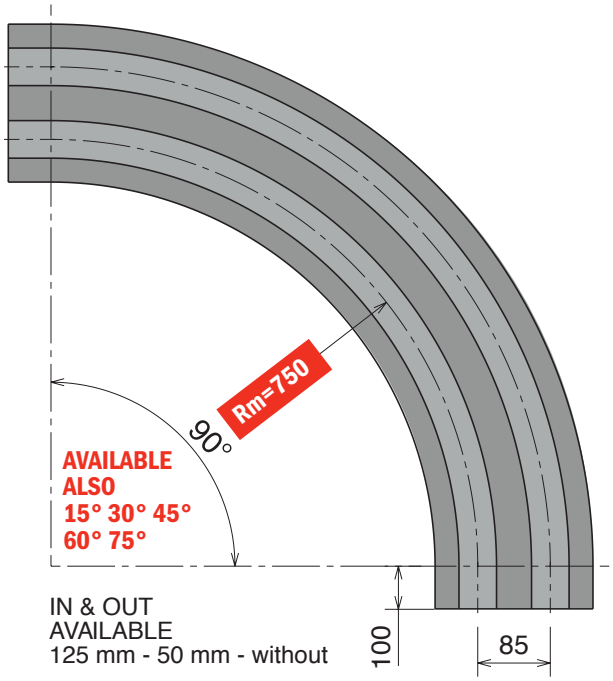



Available in BluLub®

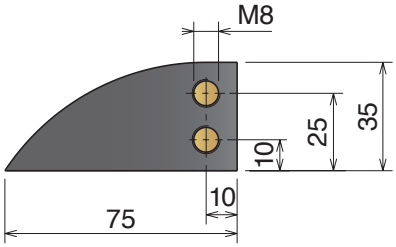

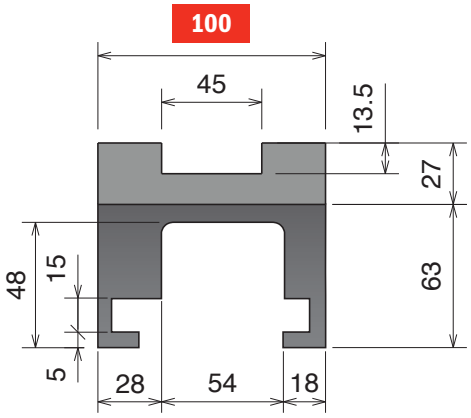

SINGLE TRACK

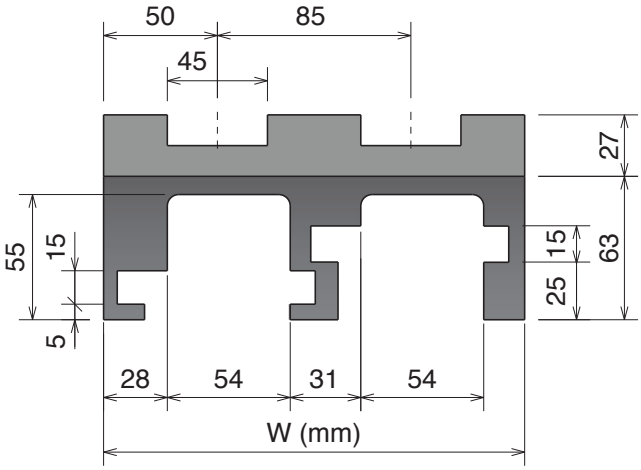

MULTI TRACK

Magnetic System

Upper part available, on request, also in BluLub® and for abrasive applications.

Part	Article-Nr.	Tracks	W
706	70616614	1	100
706	70616624	2	185
706	70616634	3	270
706	70616644	4	355
706	70616654	5	440
706	70616664	6	525
706	70616674	7	610
706	70616684	8	695



Standard codes on table



add "**B**" for BluLub®



add "**C**" for abrasive

Part	Article-Nr.	Tracks	W
706	70616614RS	1	100
706	70616624RS	2	185
706	70616634RS	3	270
706	70616644RS	4	355
706	70616654RS	5	440
706	70616664RS	6	525
706	70616674RS	7	610
706	70616684RS	8	695



RS
add "**RS**" for RS-version

Materiale / *Material / Materialien:*
Polietilene UHMW-PE
Polyethylene UHMW-PE
Polyäthylen UHMW-PE

261 M MC5D Series

Chain Reference 261 M - K330

Curva Larghezza Base = 100 mm; Passo = 85 mm
Curve Basic Width = 100 mm; Pitch = 85 mm
Kurve Basisbreite = 100 mm; Teilung = 85 mm

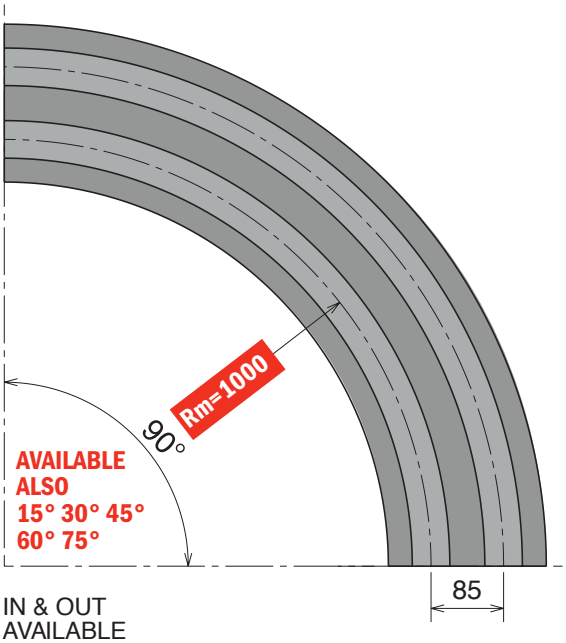

IN & OUT
AVAILABLE
125 mm - 100 mm - 50 mm



Available in
BluLub®

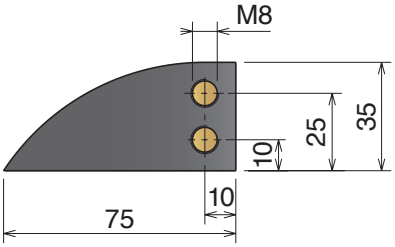

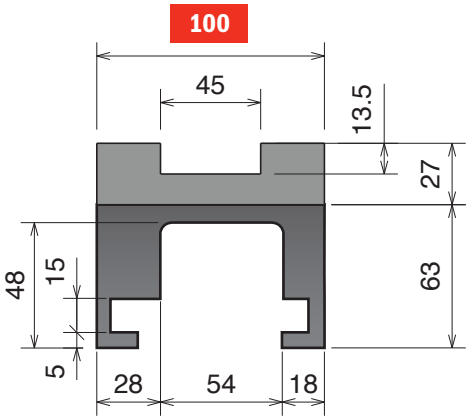

SINGLE TRACK

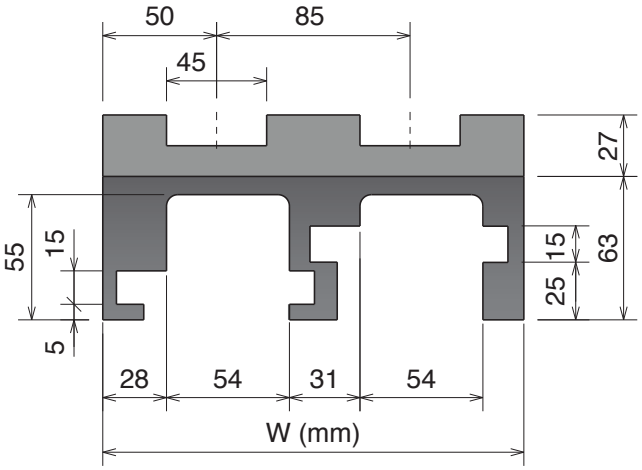

MULTI TRACK

Magnetic System

Upper part available, on request, also in BluLub® and for abrasive applications.

Part	Article-Nr.	Tracks	W
706	70619610	1	100
706	70619620	2	185
706	70619630	3	270
706	70619640	4	355
706	70619650	5	440
706	70619660	6	525
706	70619670	7	610
706	70619680	8	695


Standard codes on table


add "**B**" for BluLub®


add "**C**" for abrasive

Part	Article-Nr.	Tracks	W
706	70619610RS	1	100
706	70619620RS	2	185
706	70619630RS	3	270
706	70619640RS	4	355
706	70619650RS	5	440
706	70619660RS	6	525
706	70619670RS	7	610
706	70619680RS	8	695


RS
add "**RS**" for RS-version

261 M K450 *MC22 Series*

Chain Reference 261 M - K450

Curva Larghezza Base = 129 mm; Passo = 117 mm
Curve Basic Width = 129 mm; Pitch = 117 mm
Kurve Basisbreite = 129 mm; Teilung = 117 mm

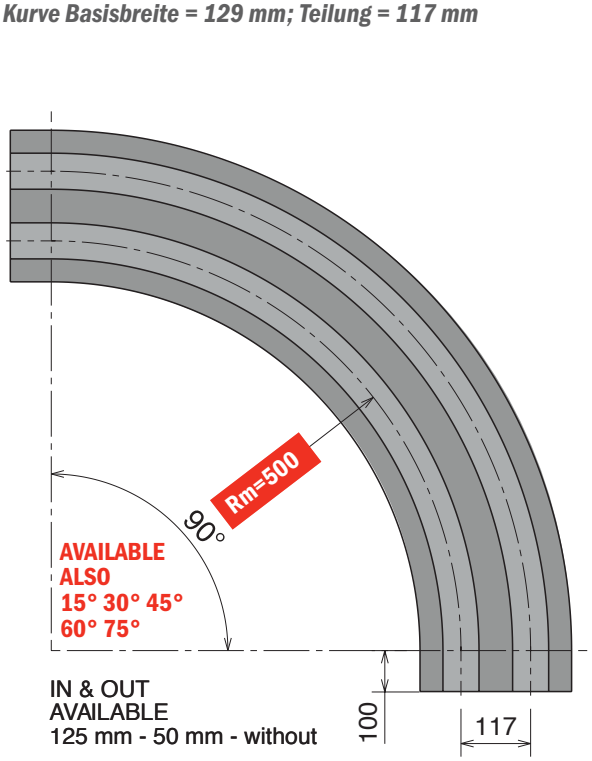

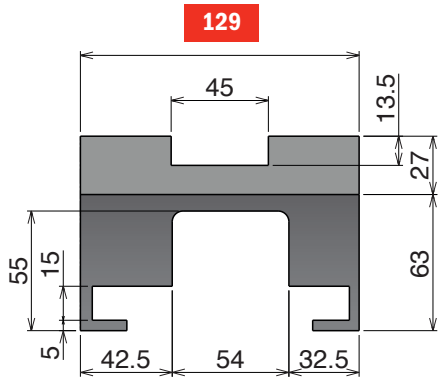

SINGLE TRACK

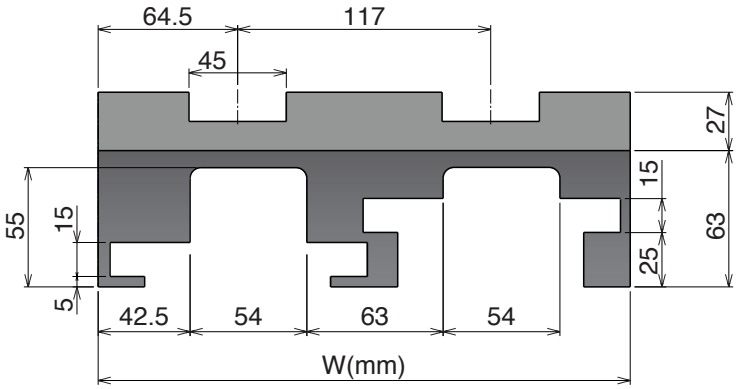

MULTI TRACK

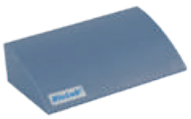

Available in
BluLub®

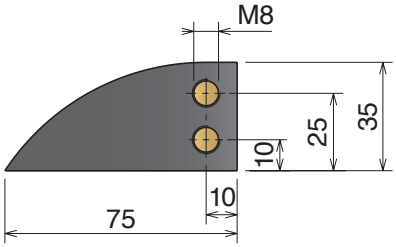

Magnetic System

Upper part available, on request, also in BluLub® and for abrasive applications.

Part	Article-Nr.	Tracks	W	Material
736	**73611614**	1	129	**Standard** codes on table
736	**73611624**	2	246	
736	**73611634**	3	363	add "**B**" for BluLub®
736	**73611644**	4	480	
				add "**C**" for abrasive

Part	Article-Nr.	Tracks	W	Material
736	**73611614RS**	1	129	**RS** add "**RS**" for RS-version
736	**73611624RS**	2	246	
736	**73611634RS**	3	363	
736	**73611644RS**	4	480	

Materiale / Material / Materialien:
Polietilene UHMW-PE
Polyethylene UHMW-PE
Polyäthylen UHMW-PE

261 M K450 MC27 Series

Chain Reference 261 M - K450

Curva Larghezza Base = 129 mm; Passo = 117 mm
Curve Basic Width = 129 mm; Pitch = 117 mm
Kurve Basisbreite = 129 mm; Teilung = 117 mm

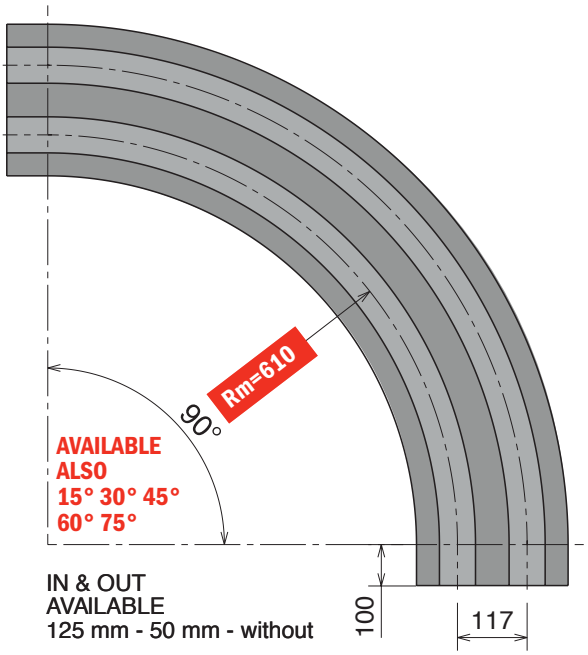



Available in BluLub®

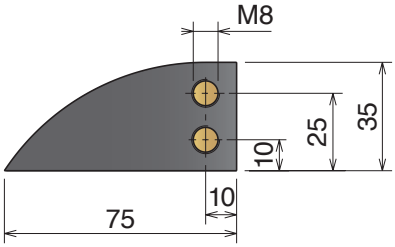

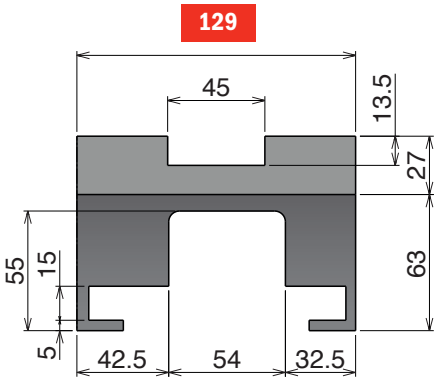

SINGLE TRACK

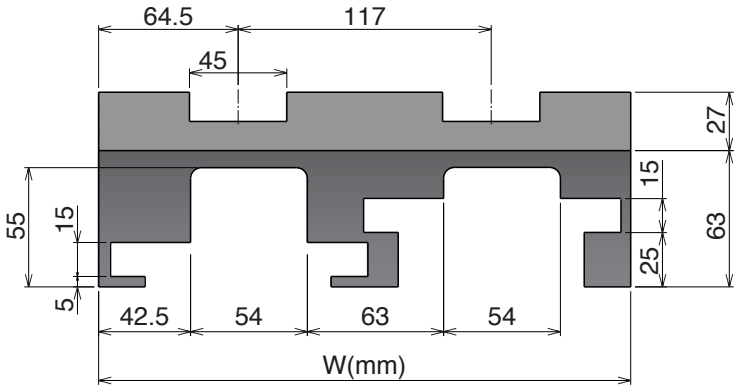

MULTI TRACK

Magnetic System

Upper part available, on request, also in BluLub® and for abrasive applications.

Part	Article-Nr.	Tracks	W
736	73613614	1	129
736	73613624	2	246
736	73613634	3	363
736	73613644	4	480



Standard codes on table



add "**B**" for BluLub®



add "**C**" for abrasive

Part	Article-Nr.	Tracks	W
736	73613614RS	1	129
736	73613624RS	2	246
736	73613634RS	3	363
736	73613644RS	4	480



RS
add "**RS**" for RS-version

Movex®

520 M *MA7 Series*

Chain Reference 520 M - K330

Curva Larghezza Base = 100 mm; Passo = 85 mm
Curve Basic Width = 100 mm; Pitch = 85 mm
Kurve Basisbreite = 100 mm; Teilung = 85 mm

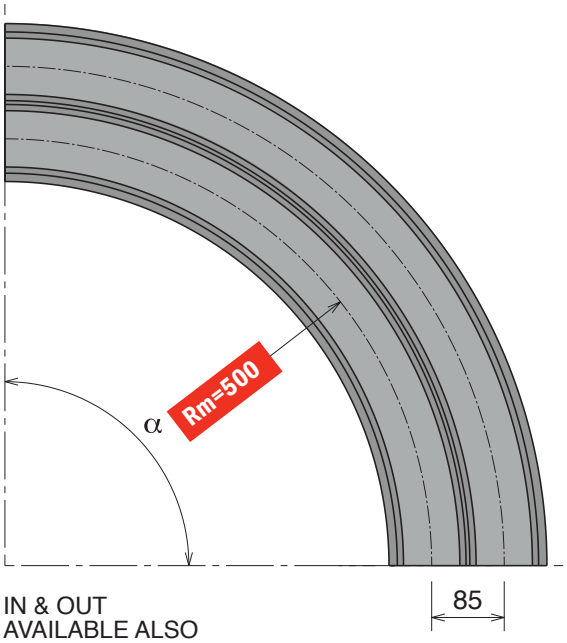

IN & OUT
AVAILABLE ALSO
125 mm - 100 mm - 50 mm



Available in
BluLub®

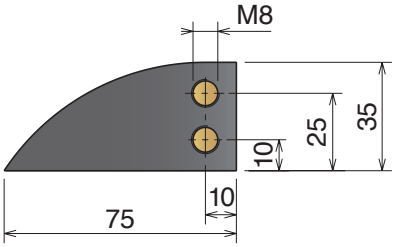

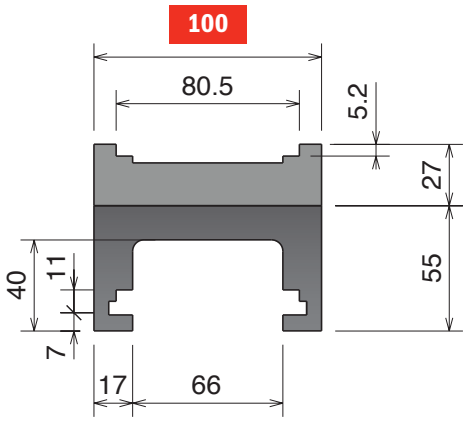

SINGLE TRACK

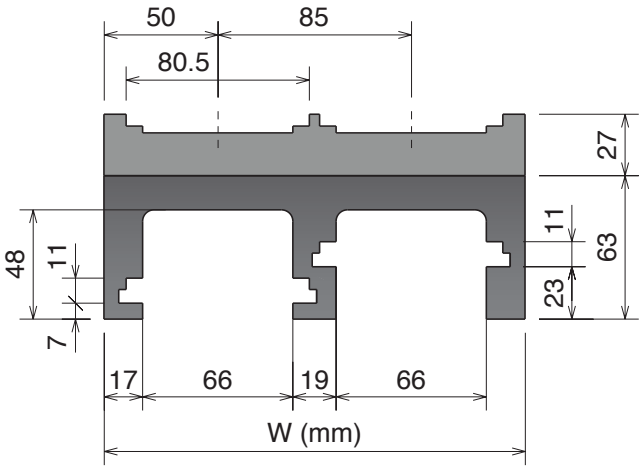

MULTI TRACK

Magnetic System

Upper part available, on request, also in BluLub® and for abrasive applications.

Part	α 15°	α 30°	α 45°	α 60°	α 75°	α 90°	Tracks	W	Material
750	75011110	75011210	75011310	75011410	75011510	75011610	1	100	
750	75011120	75011220	75011320	75011420	75011520	75011620	2	185	
750	75011130	75011230	75011330	75011430	75011530	75011630	3	270	
750	75011140	75011240	75011340	75011440	75011540	75011640	4	355	
750	75011150	75011250	75011350	75011450	75011550	75011650	5	440	
750	75011160	75011260	75011360	75011460	75011560	75011660	6	525	
750	75011170	75011270	75011370	75011470	75011570	75011670	7	610	
750	75011180	75011280	75011380	75011480	75011580	75011680	8	695	


Standard codes on table


add "**B**" for BluLub®


add "**C**" for abrasive

Materiale / *Material / Materialien:*
Polietilene UHMW-PE
Polyethylene UHMW-PE
Polyäthylen UHMW-PE

520 M *MA6 Series*

Chain Reference 520 M - K330

Curva Larghezza Base = 100 mm; Passo = 85 mm
Curve Basic Width = 100 mm; Pitch = 85 mm
Kurve Basisbreite = 100 mm; Teilung = 85 mm

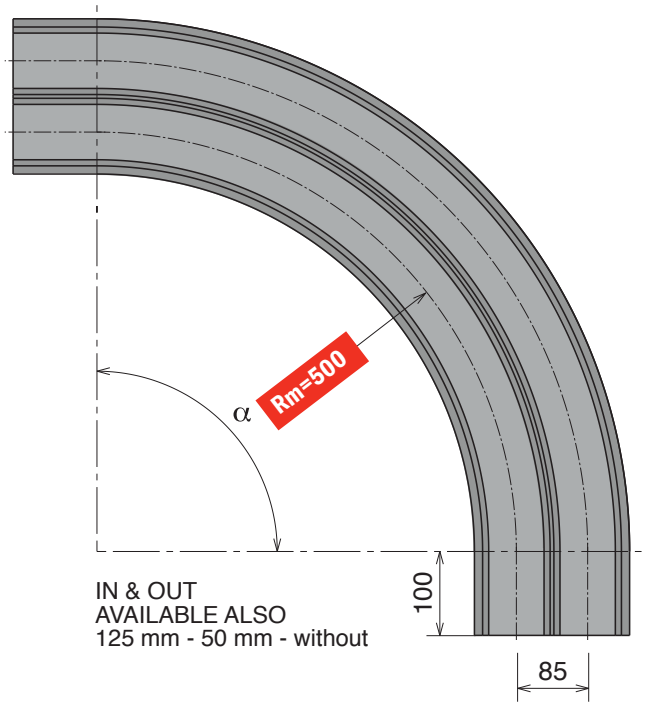

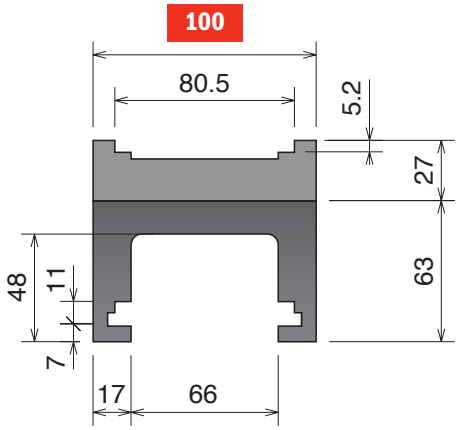

SINGLE TRACK

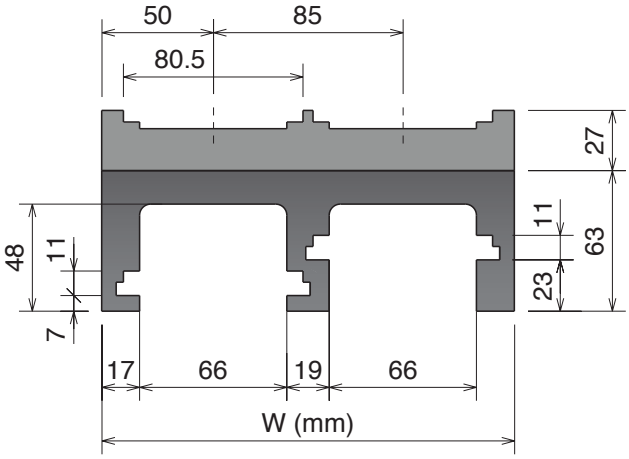

MULTI TRACK



Available in BluLub®

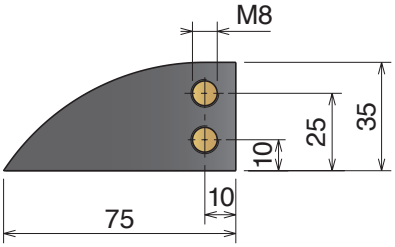

Magnetic System

Upper part available, on request, also in BluLub® and for abrasive applications.

Part	α 15°	α 30°	α 45°	α 60°	α 75°	α 90°	Tracks	W
750	75011114	75011214	75011314	75011414	75011514	75011614	1	100
750	75011124	75011224	75011324	75011424	75011524	75011624	2	185
750	75011134	75011234	75011334	75011434	75011534	75011634	3	270
750	75011144	75011244	75011344	75011444	75011544	75011644	4	355
750	75011154	75011254	75011354	75011454	75011554	75011654	5	440
750	75011164	75011264	75011364	75011464	75011564	75011664	6	525
750	75011174	75011274	75011374	75011474	75011574	75011674	7	610
750	75011184	75011284	75011384	75011484	75011584	75011684	8	695

Material	
	**Standard** codes on table
	add "**B**" for BluLub®
	add "**C**" for abrasive

Movex®

520 M *MA4 Series*

Chain Reference 520 M - K330

Curva Larghezza Base = 111mm; Passo = 85 mm
Curve Basic Width = 111 mm; Pitch = 85 mm
Kurve Basisbreite = 111 mm; Teilung = 85 mm

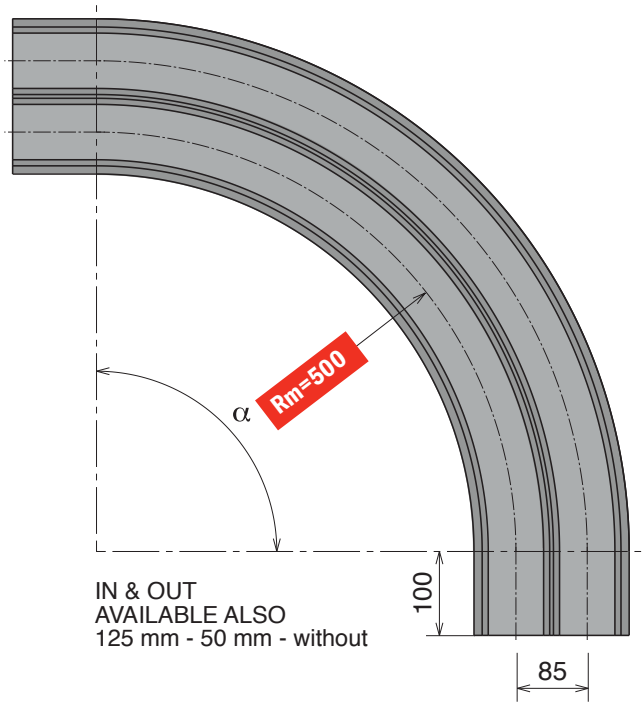



Available in BluLub®

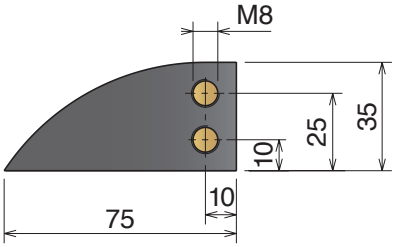

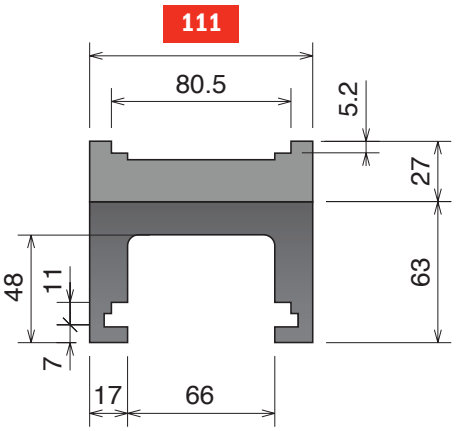

SINGLE TRACK

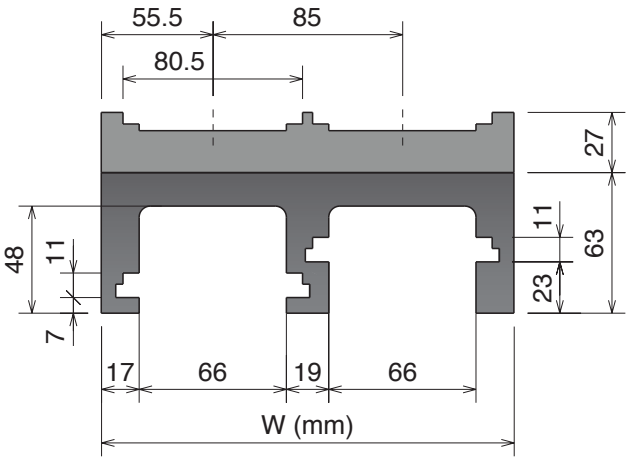

MULTI TRACK

Magnetic System

Upper part available, on request, also in BluLub® and for abrasive applications.

Part	α 15°	α 30°	α 45°	α 60°	α 75°	α 90°	Tracks	W	Material
751	75111114	75111214	75111314	75111414	75111514	75111614	1	111	
751	75111124	75111224	75111324	75111424	75111524	75111624	2	196	
751	75111134	75111234	75111334	75111434	75111534	75111634	3	281	
751	75111144	75111244	75111344	75111444	75111544	75111644	4	366	
751	75111154	75111254	75111354	75111454	75111554	75111654	5	451	
751	75111164	75111264	75111364	75111464	75111564	75111664	6	536	
751	75111174	75111274	75111374	75111474	75111574	75111674	7	621	
751	75111184	75111284	75111384	75111484	75111584	75111684	8	706	


Standard codes on table


add "**B**" for BluLub®


add "**C**" for abrasive

Materiale / *Material / Materialien:*
Polietilene UHMW-PE
Polyethylene UHMW-PE
Polyäthylen UHMW-PE

520 M *MA8 Series*

Chain Reference 520 M - K330

Curva Larghezza Base = 100 mm; Passo = 85 mm
Curve Basic Width = 100 mm; Pitch = 85 mm
Kurve Basisbreite = 100 mm; Teilung = 85 mm

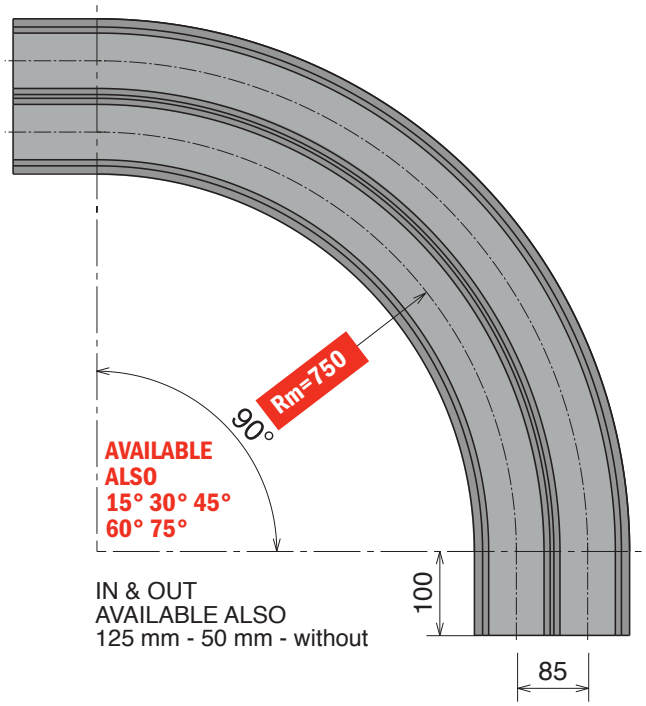



Available in BluLub®

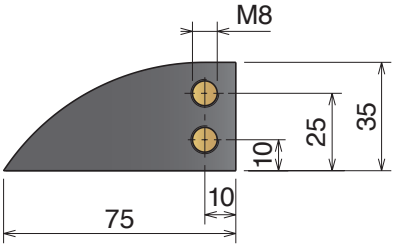

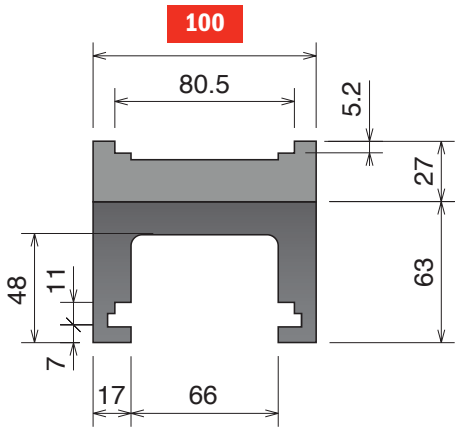

SINGLE TRACK

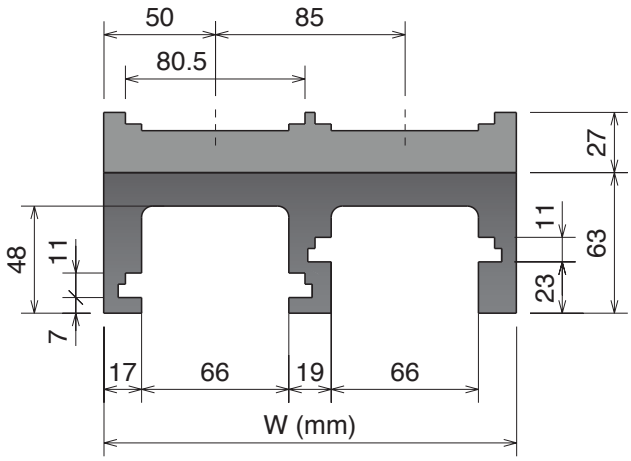

MULTI TRACK

Magnetic System

Upper part available, on request, also in BluLub® and for abrasive applications.

Part	Article-Nr.	Tracks	W	Material
750	75016614	1	100	
750	75016624	2	185	
750	75016634	3	270	
750	75016644	4	355	
750	75016654	5	440	
750	75016664	6	525	
750	75016674	7	610	
750	75016684	8	695	


Standard codes on table


add "**B**" for BluLub®


add "**C**" for abrasive

Movex®

520 M *MA42 Series*

Chain Reference 520 M - K330

Curva Larghezza Base = 111 mm; Passo = 85 mm
Curve Basic Width = 111 mm; Pitch = 85 mm
Kurve Basisbreite = 111 mm; Teilung = 85 mm

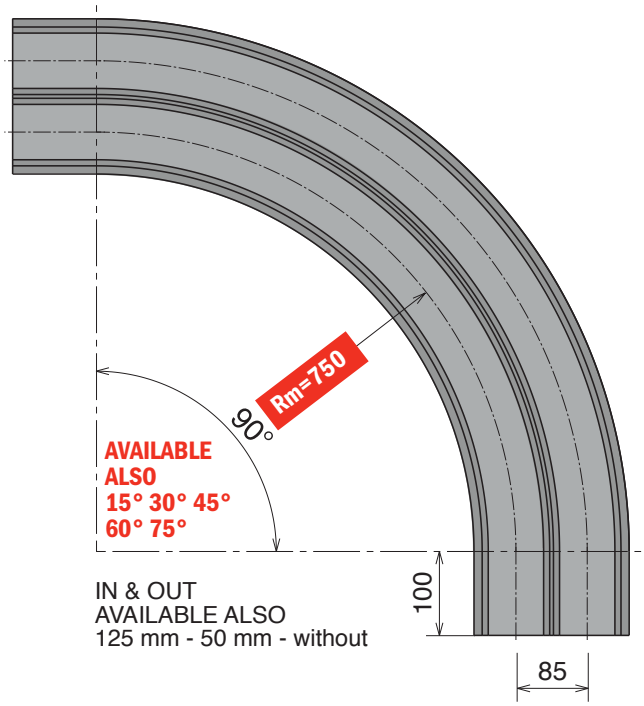

IN & OUT
AVAILABLE ALSO
125 mm - 50 mm - without



Available in
BluLub®

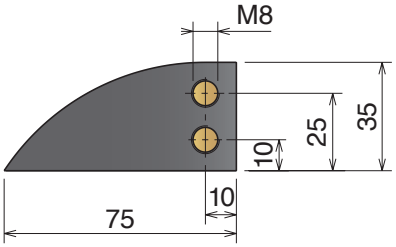

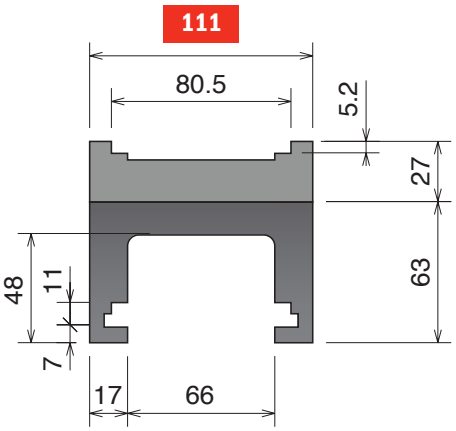

SINGLE TRACK

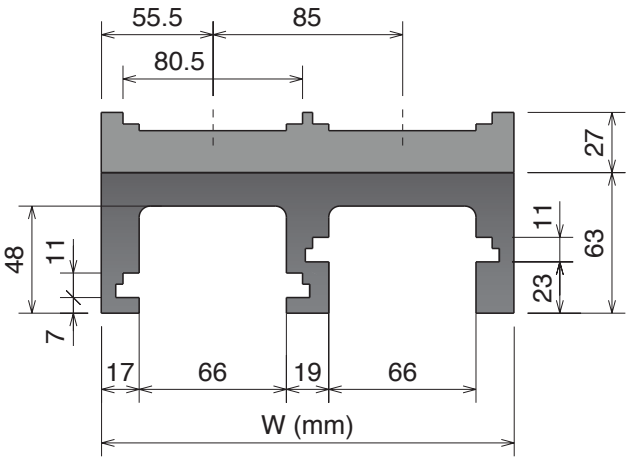

MULTI TRACK

Magnetic System

Upper part available, on request, also in BluLub® and for abrasive applications.

Part	Article-Nr.	Tracks	W	Material
751	**75116614**	1	111	
751	**75116624**	2	196	
751	**75116634**	3	281	
751	**75116644**	4	366	
751	**75116654**	5	451	
751	**75116664**	6	536	
751	**75116674**	7	621	
751	**75116684**	8	706	


Standard codes on table


add "**B**" for BluLub®


add "**C**" for abrasive

Materiale / *Material / Materialien:*
Polietilene UHMW-PE
Polyethylene UHMW-PE
Polyäthylen UHMW-PE

520 M *MA43 Series*

Chain Reference 520 M - K330

Curva Larghezza Base = 111 mm; Passo = 85 mm
Curve Basic Width = 111 mm; Pitch = 85 mm
Kurve Basisbreite = 111 mm; Teilung = 85 mm

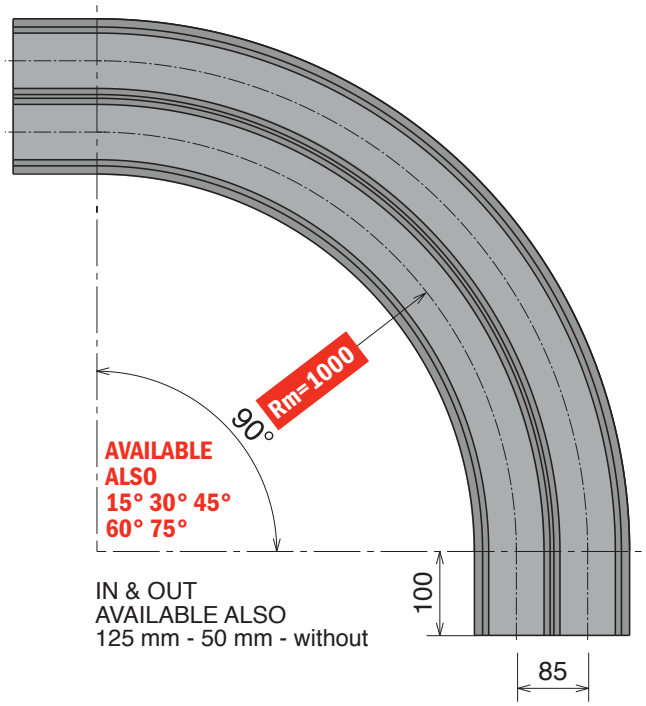



Available in BluLub®

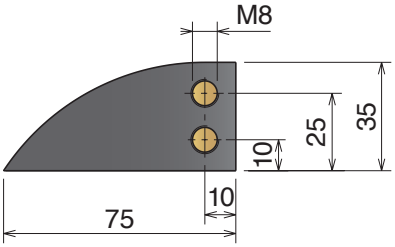

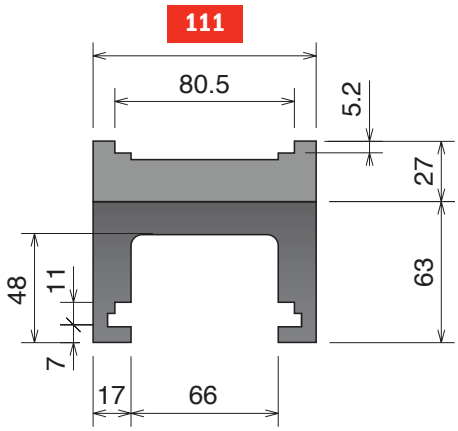

SINGLE TRACK

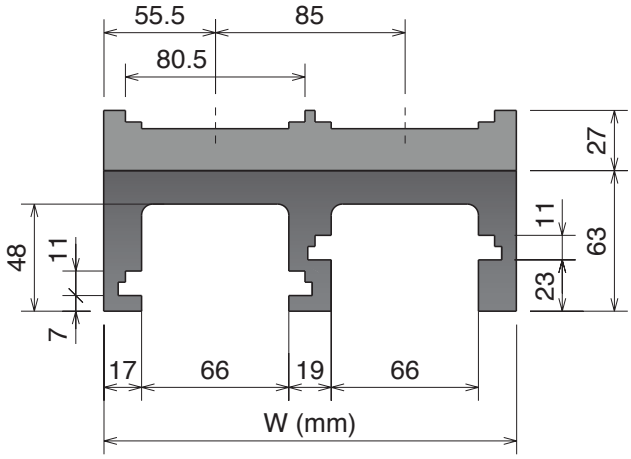

MULTI TRACK

Magnetic System

Upper part available, on request, also in BluLub® and for abrasive applications.

Part	Article-Nr.	Tracks	W
751	**75119614**	1	111
751	**75119624**	2	196
751	**75119634**	3	281
751	**75119644**	4	366
751	**75119654**	5	451
751	**75119664**	6	536
751	**75119674**	7	621
751	**75119684**	8	706



Standard codes on table



add "**B**" for BluLub®



add "**C**" for abrasive

Movex®

520 M *MA5D Series*

Chain Reference 520 M - K330

Curva Larghezza Base = 100 mm; Passo = 85 mm
Curve Basic Width = 100 mm; Pitch = 85 mm
Kurve Basisbreite = 100 mm; Teilung = 85 mm

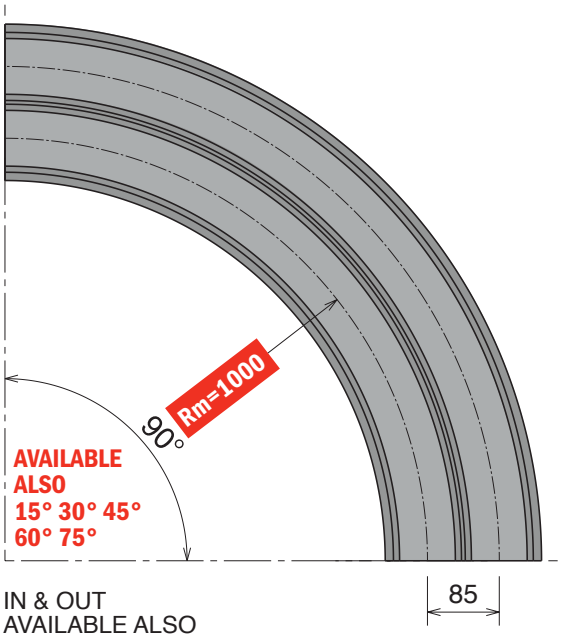

IN & OUT
AVAILABLE ALSO
125 mm - 100 mm - 50 mm



Available in
BluLub®

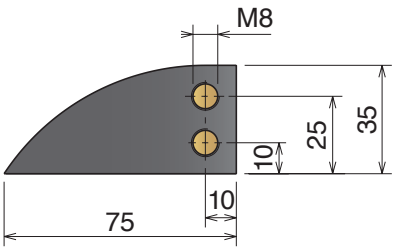

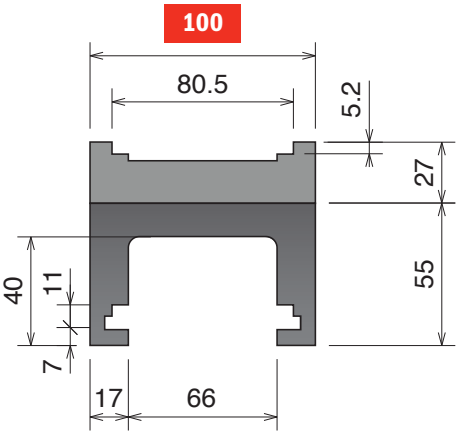

SINGLE TRACK

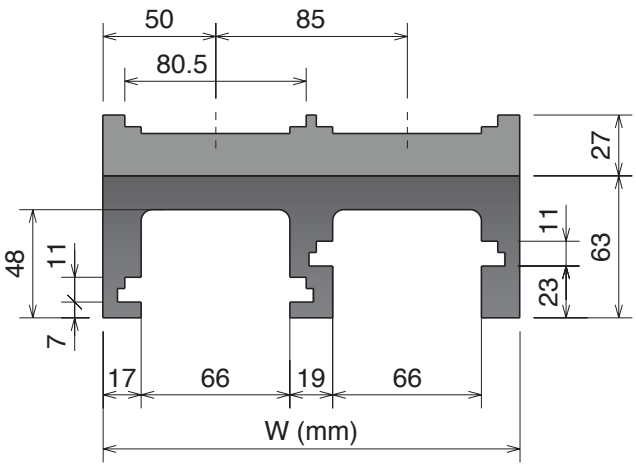

MULTI TRACK

Magnetic System

Upper part available, on request, also in BluLub® and for abrasive applications.

Part	Article-Nr.	Tracks	W	Material
750	**75019610**	1	100	
750	**75019620**	2	185	
750	**75019630**	3	270	
750	**75019640**	4	355	
750	**75019650**	5	440	
750	**75019660**	6	525	
750	**75019670**	7	610	
750	**75019680**	8	695	


Standard codes on table


add "**B**" for BluLub®


add "**C**" for abrasive

Materiale / *Material / Materialien:*
Polietilene UHMW-PE
Polyethylene UHMW-PE
Polyäthylen UHMW-PE

550 M

New

Chain Reference 550 M - K330

Curva Larghezza Base = 100 mm; Passo = 85 mm
Curve Basic Width = 100 mm; Pitch = 85 mm
Kurve Basisbreite = 100 mm; Teilung = 85 mm

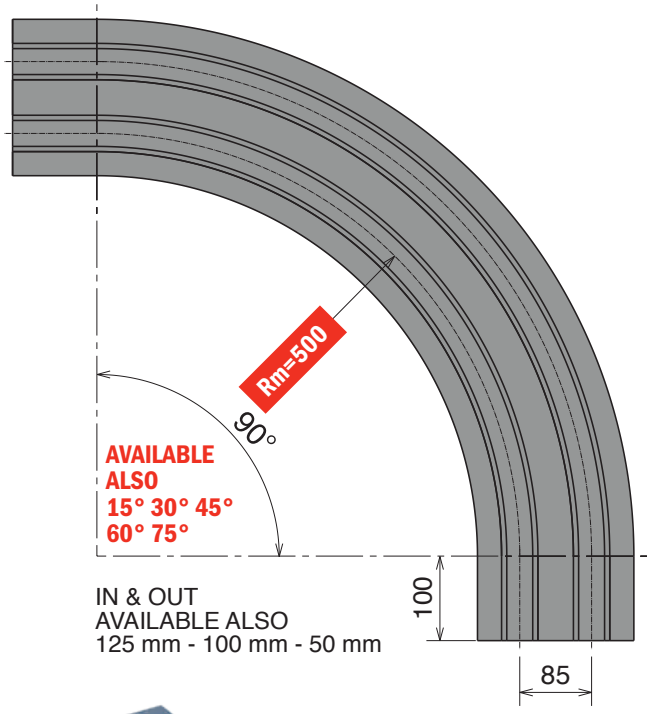



Available in BluLub®

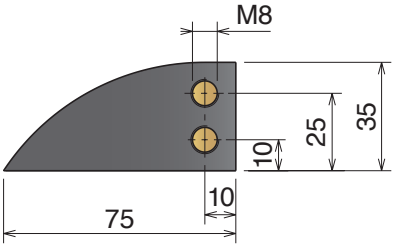

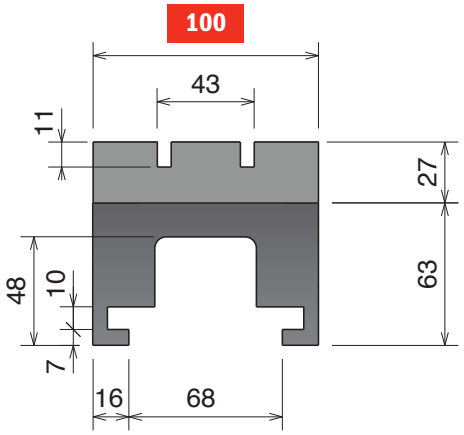

SINGLE TRACK

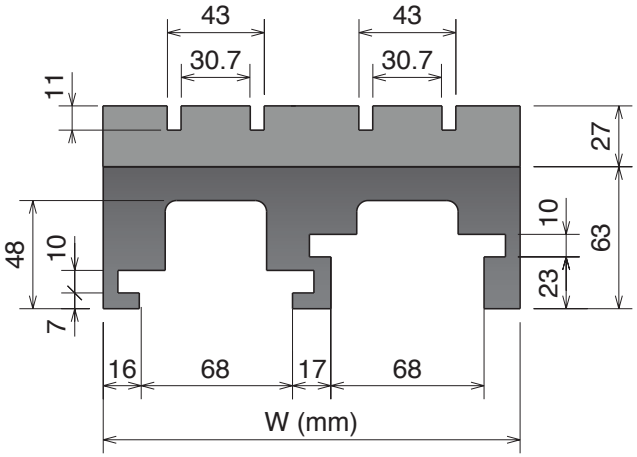

MULTI TRACK

Magnetic System

Upper part available, on request, also in BluLub® and for abrasive applications.

Part	α 90°	Tracks	W	Material
752	75211614	1	100	
752	75211624	2	185	
752	75211634	3	270	
752	75211644	4	355	
752	75211654	5	440	
752	75211664	6	525	
752	75211674	7	610	
752	75211684	8	695	

Standard codes on table

add "**B**" for BluLub®

add "**C**" for abrasive

Part	α 90°	Tracks	W	Material
752	75211614RS	1	100	
752	75211624RS	2	185	
752	75211634RS	3	270	
752	75211644RS	4	355	
752	75211654RS	5	440	
752	75211664RS	6	525	
752	75211674RS	7	610	
752	75211684RS	8	695	

RS
add "**RS**" for RS-version

878-880-881 TAB-260 TAB

Chain Reference	878 TAB - K325/K450	880-881 TAB - K325/K450/K750	260 TAB - K330/K450

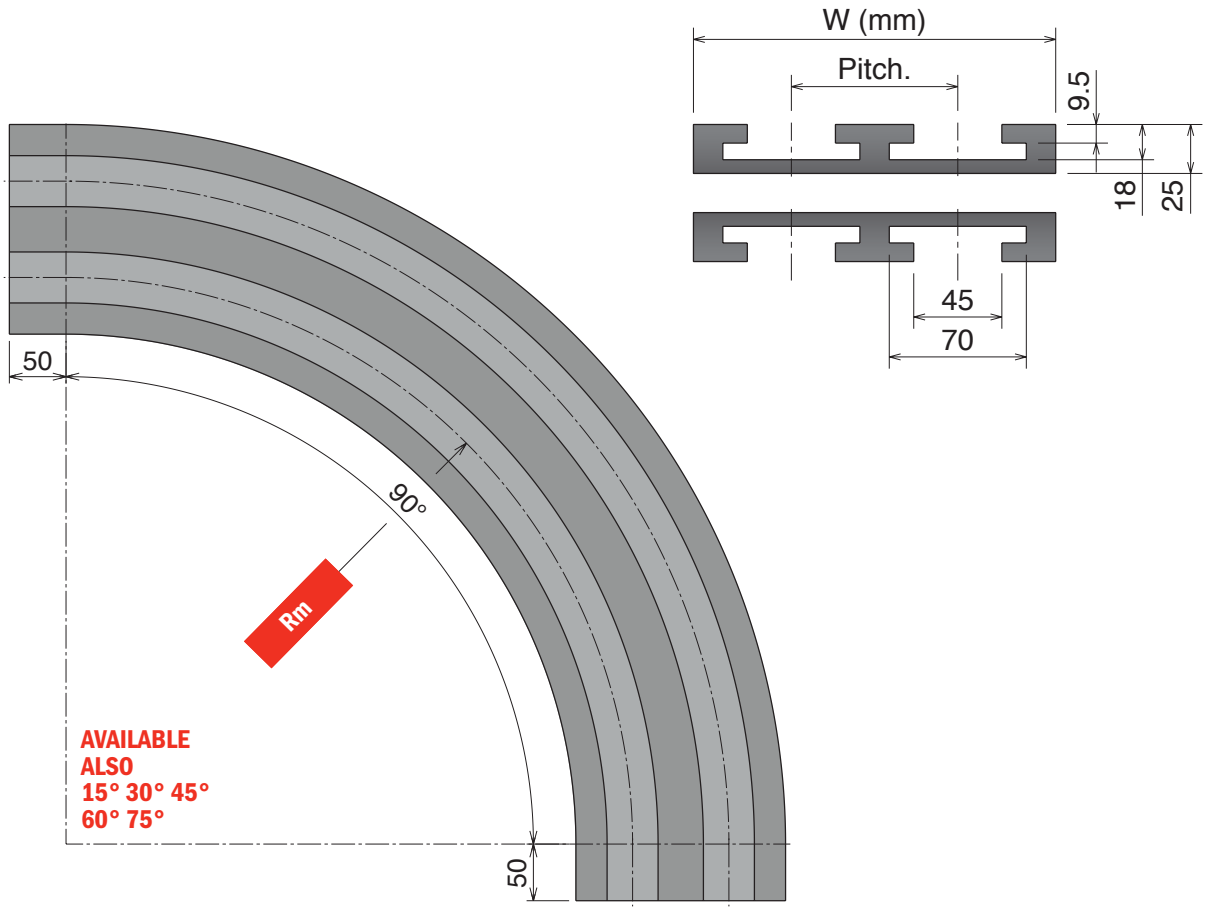

Tab System

Upper part available, on request, also in BluLub® and for abrasive applications.

Part	Rm 500	Rm 610	Rm 800	Rm 1000	Tracks	W	Pitch	Material
K325								
720	72021612	72023612	72027612	72029612	1	100	85	
720	72021622	72023622	72027622	72029622	2	185		
720	72021632	72023632	72027632	72029632	3	270		
720	72021642	72023642	72027642	72029642	4	355		
720	72021652	72023652	72027652	72029652	5	440		
720	72021662	72023662	72027662	72029662	6	525		
K450								
721	72121612	72123612	72127612	72129612	1	130	120	
721	72121622	72123622	72127622	72129622	2	250		
721	72121632	72123632	72127632	72129632	3	370		
721	72121642	72123642	72127642	72129642	4	490		
721	72121652	72123652	72127652	72129652	5	610		
721	72121662	72123662	72127662	72129662	6	730		
K750								
722	72221612	72223612	72227612	72229612	1	200	195	
722	72221622	72223622	72227622	72229622	2	395		
722	72221632	72223632	72227632	72229632	3	590		
722	72221642	72223642	72227642	72229642	4	785		


Standard codes on table


add "**B**" for BluLub®


add "**C**" for abrasive

Materiale / *Material / Materialien:*
Polietilene UHMW-PE
Polyethylene UHMW-PE
Polyäthylen UHMW-PE

882 TAB

Chain Reference 882 TAB - K450/K750/K1000/K1200

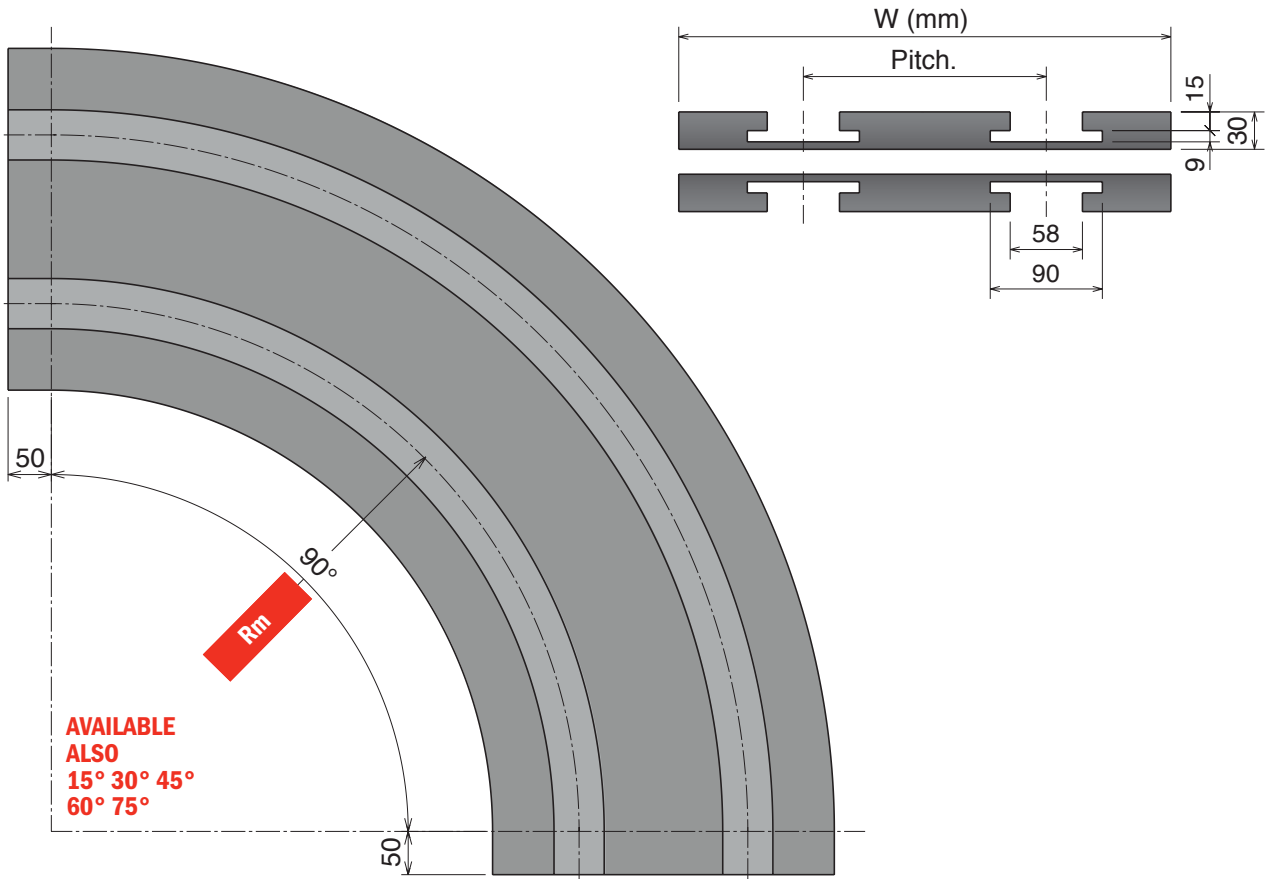

Tab System

Upper part available, on request, also in BluLub® and for abrasive applications.

Part	Rm 610	Rm 800	Rm 1000	Tracks	W	Pitch
K450						
727	72723612	72727612	72729612	1	130	120
727	72723622	72727622	72729622	2	250	
727	72723632	72727632	72729632	3	370	
727	72723642	72727642	72729642	4	490	
K750						
723	72323612	72327612	72329612	1	200	195
723	72323622	72327622	72329622	2	395	
723	72323632	72327632	72329632	3	590	
723	72323642	72327642	72329642	4	785	
K1000						
724	72423612	72427612	72429612	1	270	260
724	72423622	72427622	72429622	2	530	
724	72423632	72427632	72429632	3	790	
724	72423642	72427642	72429642	4	1050	
K1200						
725	72523612	72527612	72529612	1	320	310
725	72523622	72527622	72529622	2	630	
725	72523632	72527632	72529632	3	940	
725	72523642	72527642	72529642	4	1250	


Standard codes on table


add "**B**" for BluLub®


add "**C**" for abrasive

Movex®

1873-1874 TAB

Chain Reference 1873 TAB-1874 TAB - K325/K450/K600/K750/K1000/K1200

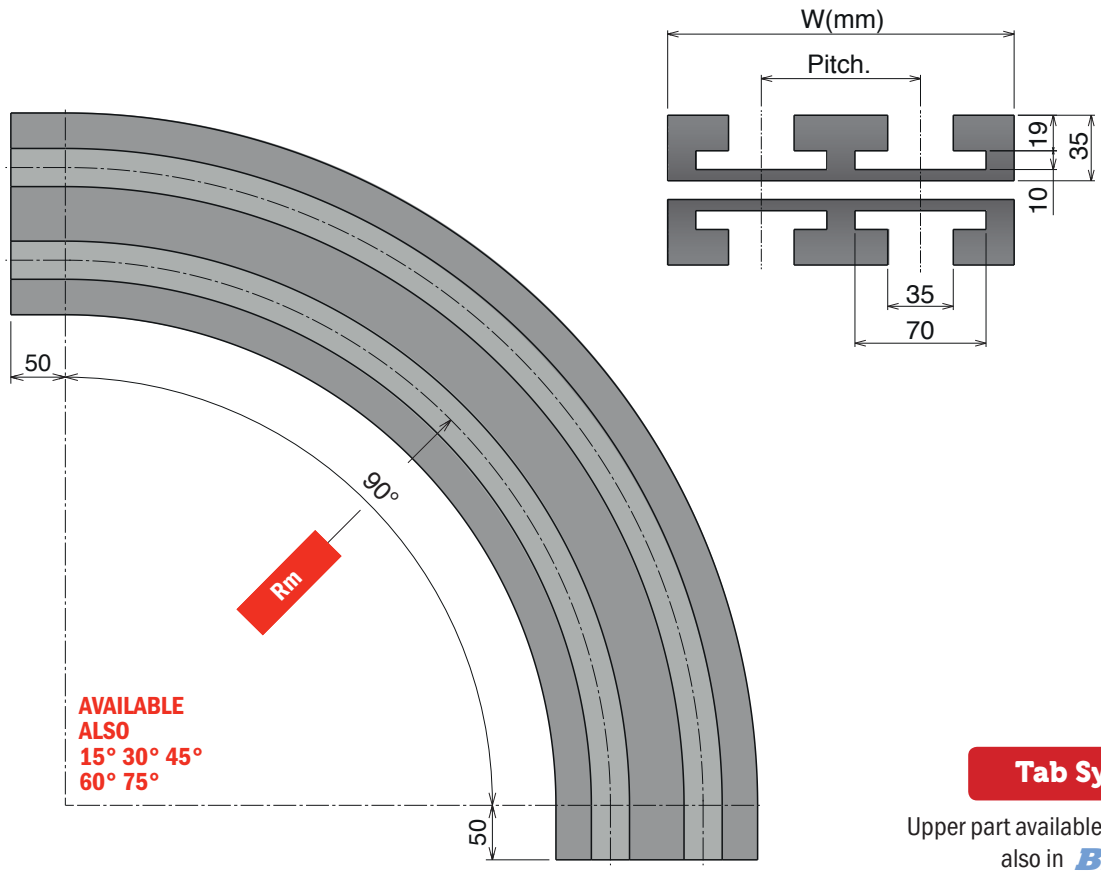

Tab System

Upper part available, on request, also in BluLub® and for abrasive applications.

Part	Rm 500	Rm 610	Rm 800	Rm 1000	Tracks	W	Pitch
K325							
726	72621612	72623612	72627612	72629612	1	100	85
726	72621622	72623622	72627622	72629622	2	185	
726	72621632	72623632	72627632	72629632	3	270	
726	72621642	72623642	72627642	72629642	4	355	
K450							
728	72821612	72823612	72827612	72829612	1	130	120
728	72821622	72823622	72827622	72829622	2	250	
728	72821632	72823632	72827632	72829632	3	370	
728	72821642	72823642	72827642	72829642	4	490	
K600							
729	72921612	72923612	72927612	72929612	1	170	160
729	72921622	72923622	72927622	72929622	2	330	
729	72921632	72923632	72927632	72929632	3	490	
729	72921642	72923642	72927642	72929642	4	650	
K750							
737	73721612	73723612	73727612	73729612	1	200	195
737	73721622	73723622	73727622	73729622	2	395	
737	73721632	73723632	73727632	73729632	3	590	
737	73721642	73723642	73727642	73729642	4	785	
K1000							
738	73821612	73823612	73827612	73829612	1	270	260
738	73821622	73823622	73827622	73829622	2	530	
K1200							
739	73921612	73923612	73927612	73929612	1	320	310
739	73921622	73923622	73927622	73929622	2	630	


Standard codes on table


add "**B**" for BluLub®


add "**C**" for abrasive

Materiale / *Material / Materialien:*
Polietilene UHMW-PE
Polyethylene UHMW-PE
Polyäthylen UHMW-PE

1843 TAB

Chain Reference 1843 TAB - K125/K200

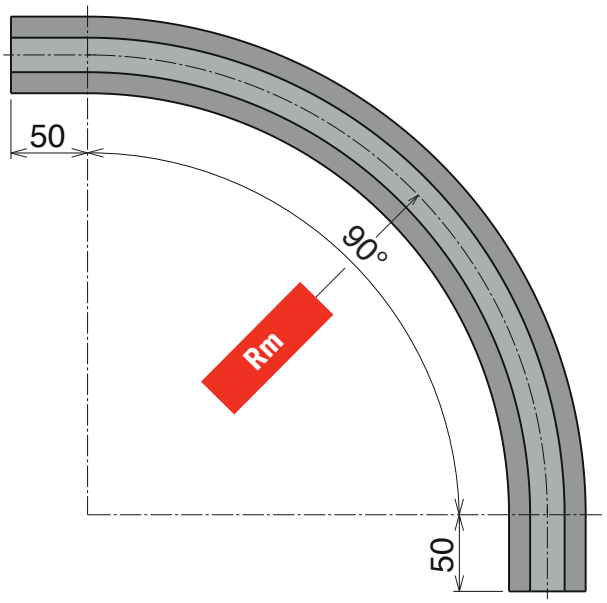

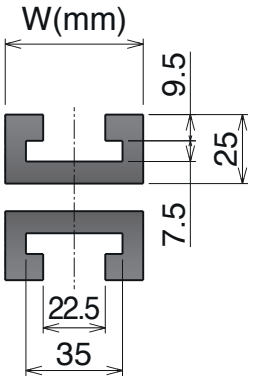

Tab System

Upper part available, on request, also in BluLub® and for abrasive applications.

Part	Rm 300	Rm 500	Tracks	W	Material
K125					
740	74020612	74021612	1	50	
K200					
741	74120612	74121612	1	70	


Standard codes on table


add "**B**" for BluLub®


add "**C**" for abrasive

Movex®

1701 TAB-1706 TAB

Chain Reference 1701 TAB -1701 TAB OP- 1706 TAB - K55

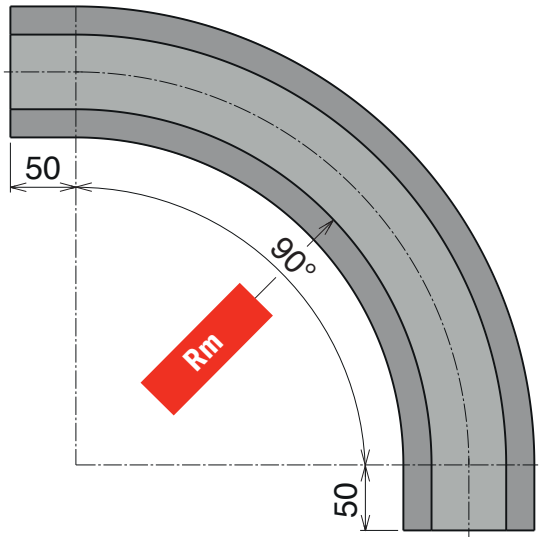

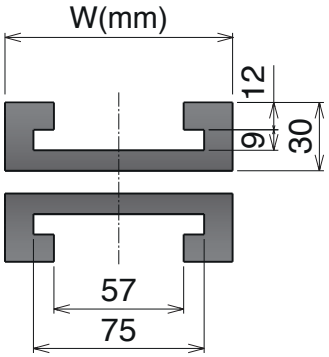

Tab System

Upper part available, on request, also in BluLub® and for abrasive applications.

Part	Rm 250	Rm 500	Tracks	W	Material
K55					
742	**74220612**	**74221612**	1	100	


Standard codes on table


add "**B**" for BluLub®


add "**C**" for abrasive

Materiale / *Material / Materialien:*
Polietilene UHMW-PE
Polyethylene UHMW-PE
Polyäthylen UHMW-PE

880-881 B

Chain Reference 880 B-881 B - K325

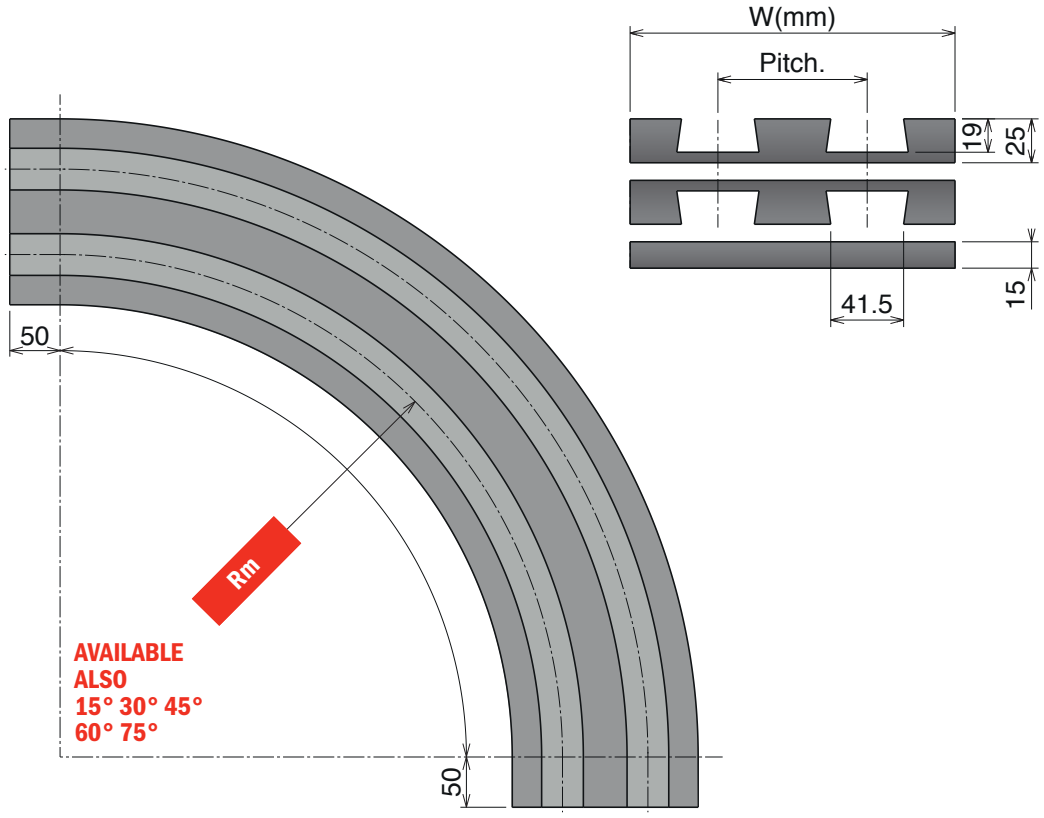

Bevel System

Upper part available, on request, also in BluLub® and for abrasive applications.

Part	Rm 500	Rm 610	Rm 800	Rm 1000	Tracks	W	Pitch	Material
K325								
770	77031612	77033612	77037612	77039612	1	100	85	
770	77031622	77033622	77037622	77039622	2	185		
770	77031632	77033632	77037632	77039632	3	270		
770	77031642	77033642	77037642	77039642	4	355		
770	77031652	77033652	77037652	77039652	5	440		
770	77031662	77033662	77037662	77039662	6	525		


Standard codes on table


add "**B**" for BluLub®


add "**C**" for abrasive

878-880-881 TAB *Straight track section*

Chain Reference 880-881 TAB - K325/K450/K750

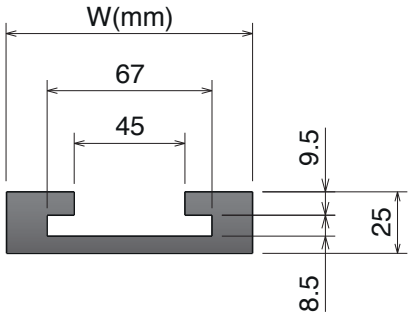

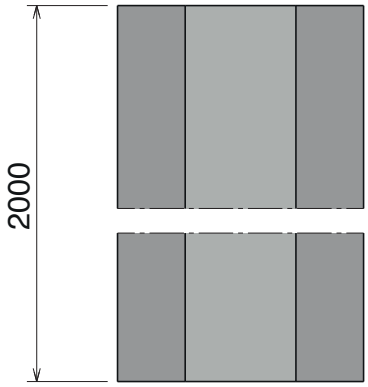

Tab System

Upper part available, on request, also in BluLub® and for abrasive applications.

Part	Article-Nr.	W	Length	Material
K325				
790	**79023010**	100	2000	
K450				
790	**79024010**	130	2000	
K750				
790	**79026010**	200	2000	


Standard codes on table


add "**B**" for BluLub®


add "**C**" for abrasive

882 TAB *Straight track section*

Chain Reference 882 TAB - K450/K750/K1000/K1200

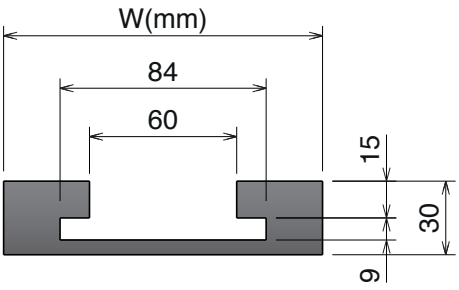

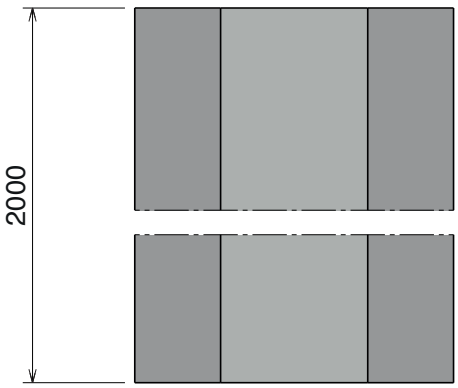

Tab System

Upper part available, on request, also in BluLub® and for abrasive applications.

Part	Article-Nr.	W	Length	Material
K450				
791	**79124010**	130	2000	
K750				
791	**79126010**	200	2000	
K1000				
791	**79127010**	270	2000	
K1200				
791	**79128010**	320	2000	


Standard codes on table


add "**B**" for BluLub®


add "**C**" for abrasive

Materiale / *Material* / *Materialien:*
Polietilene UHMW-PE
Polyethylene UHMW-PE
Polyäthylen UHMW-PE

1873-1874 TAB *Straight track section*

Chain Reference 1873 TAB-1874 TAB - K325/K450/K600/K750/K1000/K1200

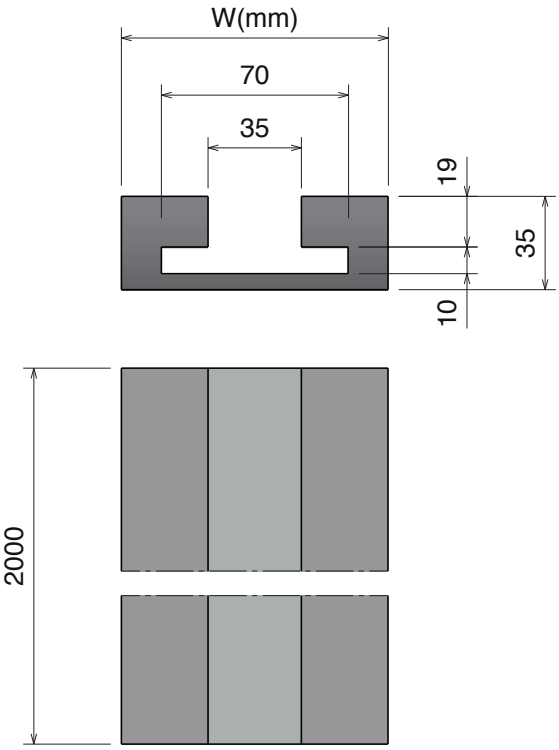

Tab System

Upper part available, on request, also in BluLub® and for abrasive applications.

Part	Article-Nr.	W	Length	Material
K325				
792	**79223010**	100	2000	
K450				
792	**79224010**	130	2000	
K600				
792	**79225010**	170	2000	
K750				
792	**79226010**	200	2000	
K1000				
792	**79227010**	270	2000	
K1200				
792	**79228010**	320	2000	

Standard codes on table

add "**B**" for BluLub®

add "**C**" for abrasive

1843 TAB *Straight track section*

Chain Reference 1843 TAB - K125/K200

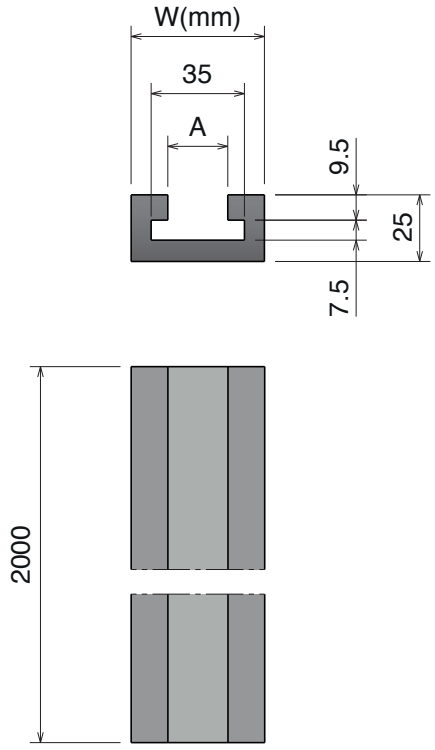

Tab System

Upper part available, on request, also in BluLub® and for abrasive applications.

Part	Article-Nr.	W	A	Length	Material
K125					
793	**79321010**	50	22,5	2000	
K200					
793	**79322010**	70	22,3	2000	

Standard codes on table

add "**B**" for BluLub®

add "**C**" for abrasive

1701 TAB-1706 TAB *Straight track section*

Chain Reference 1701 TAB -1701 TAB OP- 1706 TAB - K55

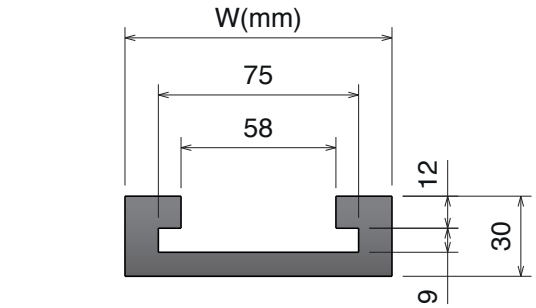

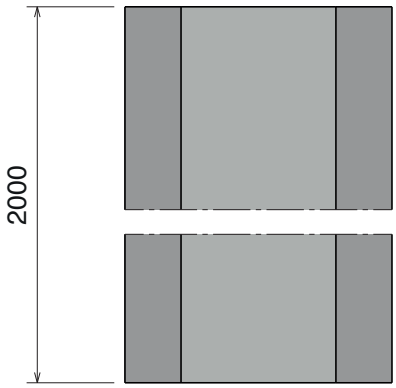

Tab System

Upper part available, on request, also in BluLub® and for abrasive applications.

Part	Article-Nr.	W	Length	Material
K55				
794	79420010	100	2000	


Standard codes on table


add "**B**" for BluLub®


add "**C**" for abrasive

PFX

The best choice for dry running applications.

PFX *is a plastic compound developed specific for chain and belts in order to run with limited lubrication or in dry applications where the demands are extreme concerning speed, performance & efficiency.*

PFX *material is developed to reduce the friction between chain, product and wearstrips even if no lubrication is used.*

Modular belts available:

Other different types of product in PFX are on request.



520 FT

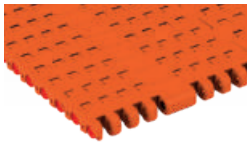

520 HD FT

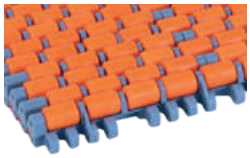

520 PRO LBP



525 HD FT

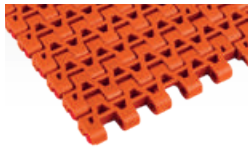

525 HD FG

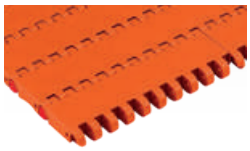

550 FT &
One track belt

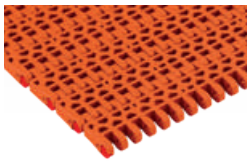

550 FG &
One track belt



550 PRO FT



550 PRO M

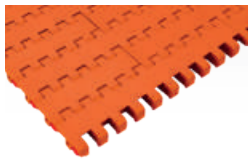

551 FT

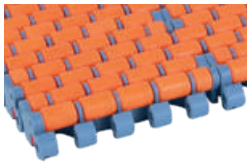

551 PRO LBP



260 M FT



260 M FG



260 TAB

Low friction
Developed to reduce friction between chain and product, and chain and wearstrip.

High performance
Longer wear life lead to excellent and long enduring product handling features.

Minimal dusting
Developed to avoid dusting under extreme circumstances.

Control of cost
Better control of total cost and sustainable conveyor technology.

Food contact Certified
PFX material is suitable in food application.

Patented material
PFX is an exclusive product of Movex.

Energy saving	Low friction	Improved safe condition	High visibility	High efficiency

173

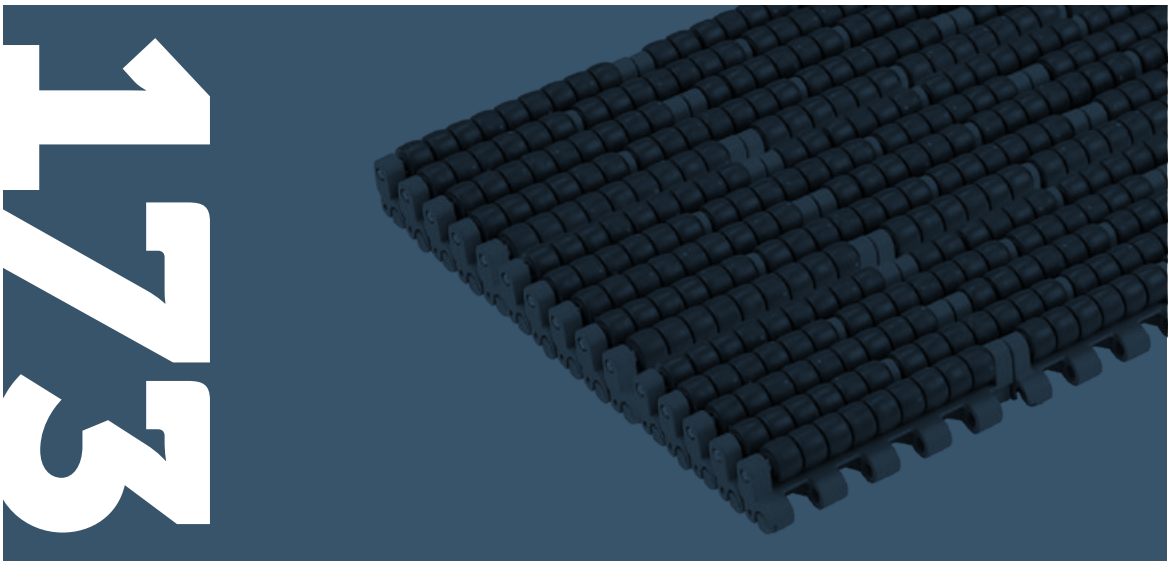

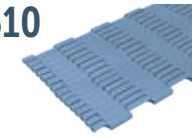

510

510 FT Pag 176

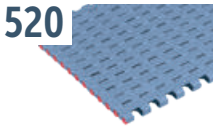

520

520 FT Pag 178

520 HD FT Pag 179

520 FTT Pag 180

520 FG Pag 181

520 GT Pag 182

520 LBP Pag 183

520 PRO LBP Pag 184

520 M Pag 185

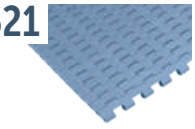

521

521 FT Pag 187



228 Transfer plate

228 One Piece with Rollers Pag 189

228 One Piece with Bearings Pag 190

228 Standard Pag 191

228 with Rollers Pag 191

228 with Bearings Pag 192

228 with Positioner and Bearings Pag 193

228 for Micropitch Pag 193

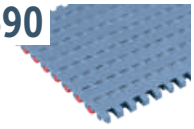

590

590 FT Pag 195

590 FT One track Belt Pag 196

590 FTT Pag 197

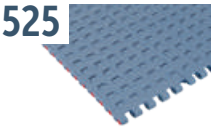

525

525 HD FT Pag 199

525 HD FT + RIB Pag 200

525 FTT Pag 201

525 HD FG Pag 202

525 HD GT Pag 203

525 HD GT Side indent Pag 204

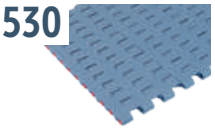

530

530 FT Pag 206

530 FTT Pag 207

530 GT Pag 208

530 GT Side indent Pag 209

530 LBP Pag 210

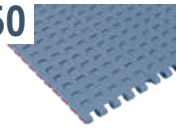

550

550 FT Pag 212

550 FT One track Belt Pag 213

550 FTT Pag 214

550 FG Pag 215

550 FG One track Belt Pag 216

550 GT Pag 217

550 GT Side indent Pag 218

550 PRO FT Pag 219

550 PRO M Pag 220

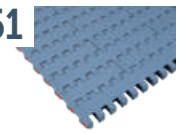

551

551 FT Pag 222

551 FTT Pag 223

551 GT Pag 224

551 GT Side indent Pag 225

551 LBP Pag 226

551 PRO LBP Pag 227/228

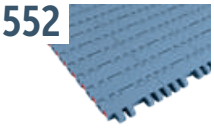

552

552 FT Pag 230

552 FT One track Belt Pag 231

552 FTT Pag 232

552 PT Pag 233

552 PT One track Belt Pag 234

552 GT Pag 235

552 GT Side indent Pag 236

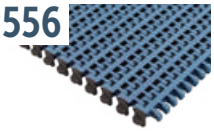

556

556 FT Pag 238

556 GT Pag 239

movexii.com

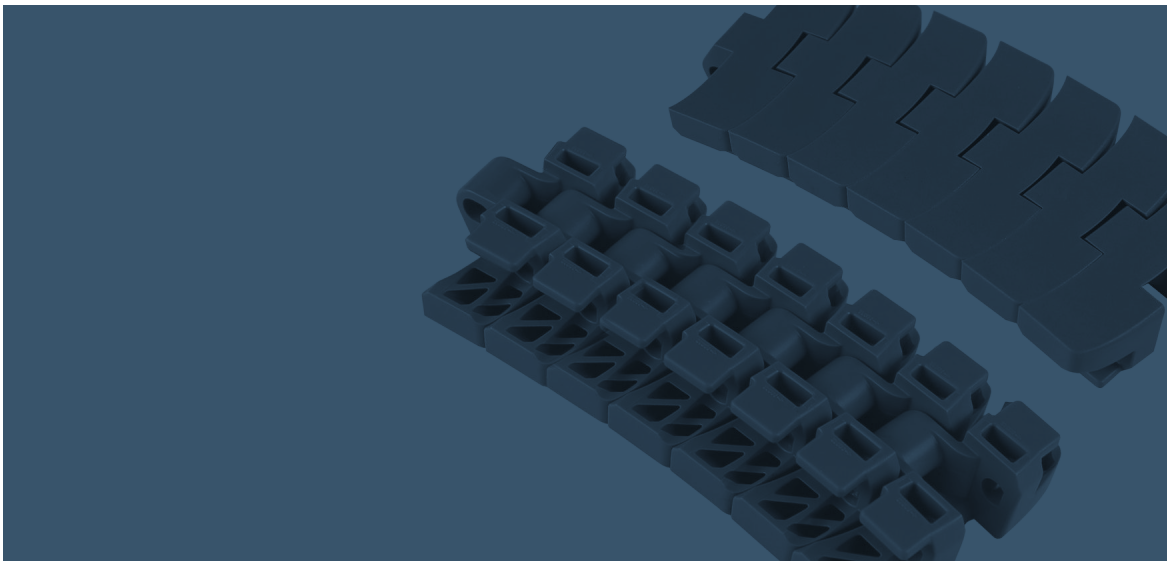

600

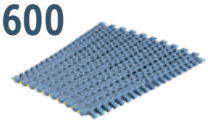

600 Standard
Pag 241

600 Heavy duty
Pag 242

600 Heavy duty with Bearings
Pag 243

600 Small radius
Pag 244

600 Heavy duty/ Small radius
Pag 245

600 Heavy duty/ Small radius with Bearings
Pag 246

600 with pusher
Pag 247

1047 Heavy duty guide
Pag 247

500



500 RR
Pag 249

389

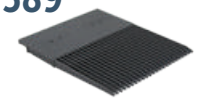

389 Combs
Pag 250

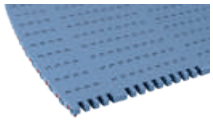

ZERO CONTACT
Pag 252

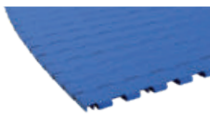

ZERO CONTACT PRO
Pag 253



ZERO CONTACT CURVE
Pag 256

260



260 M FT
Pag 260

260 M FG
Pag 261

260 TAB
Pag 262

261



261 M FT
Pag 263

261 M TAB
Pag 264

Movex®

510

Pitch 8 mm
H= 6 mm

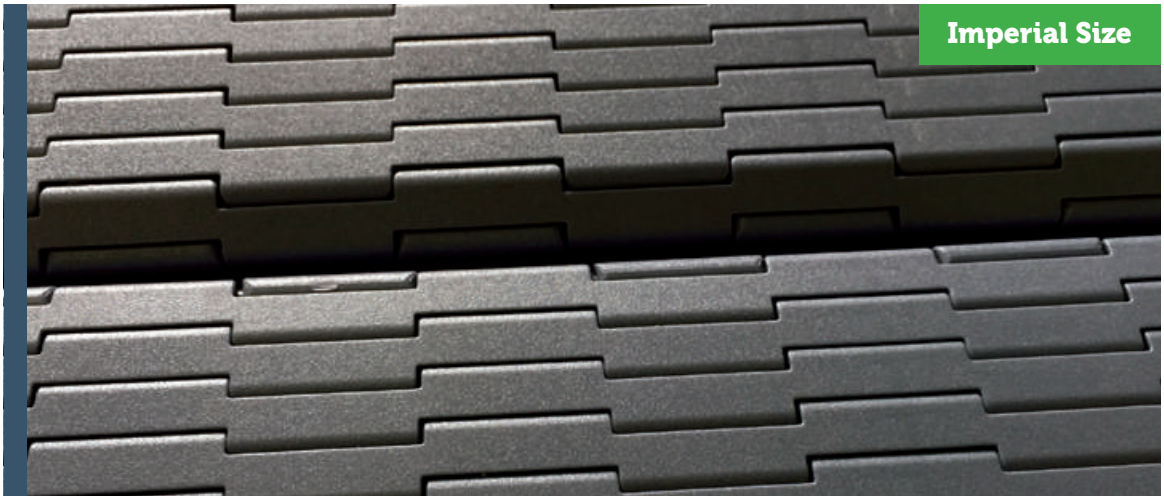

510 FT

510 FT

Tappeto Modulare 510 FT, H=6 M=3”
Modular Belt Series 510 FT, H=6 M=3” / Modulare Mattenkette 510 FT, H=6 M=3”

Patented

CODE STRUCTURE GUIDE (Example)			
5331	01	0012	A
Series	*Material	Width	Version

pg. 266 | pg. 516->524 | pg. 482

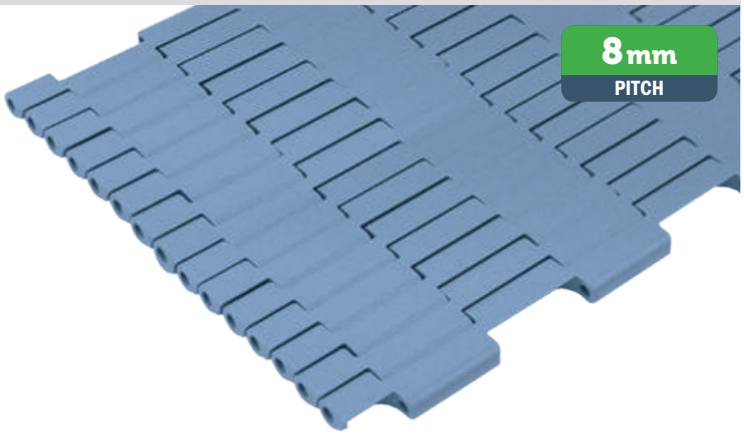

***Material**

LFA - Code 01
Low friction Acetal

Max w. load: 3000 N/m
Weight: 5,8 kg/m²
Temp. range: dry -40÷80 °C
wet -40÷65 °C
Pin material: PBT white

MX - Code 03
Performance PBT

Max w. load: 2700 N/m
Weight: 5,5 kg/m²
Temp. range: dry -40÷120 °C
wet -40÷60 °C
Pin material: POM grey

Version A - Standard

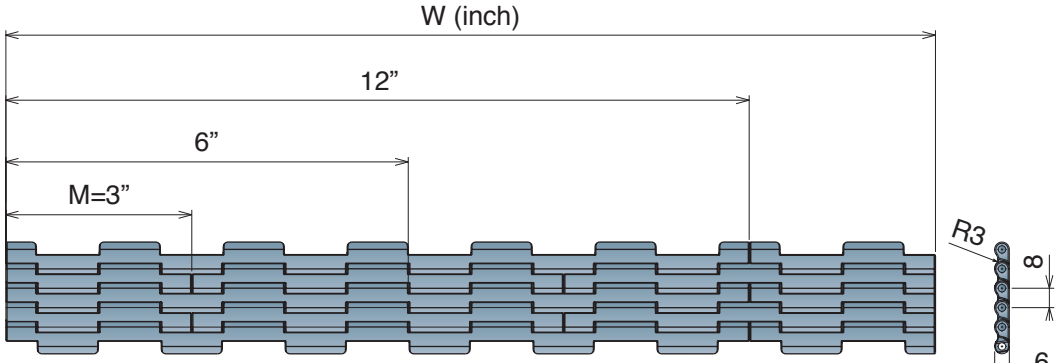

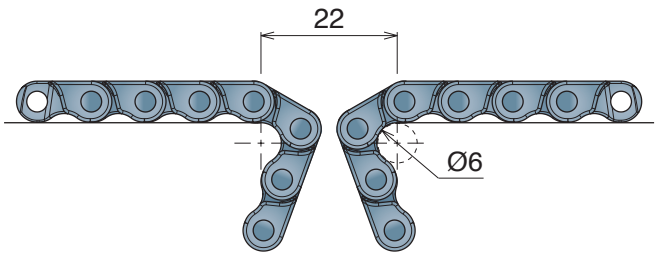

Version A - Standard

Series	Material	Width	Version
5331	*	0003	A
5331	*	0006	A
5331	*	0009	A
5331	*	0012	A
5331	*	0015	A
5331	*	0018	A
5331	*	0021	A
5331	*	0024	A
5331	*	0027	A
5331	*	0030	A
5331	*	0033	A
5331	*	0036	A
5331	*	0039	A
5331	*	0042	A
5331	*	0045	A
5331	*	0048	A

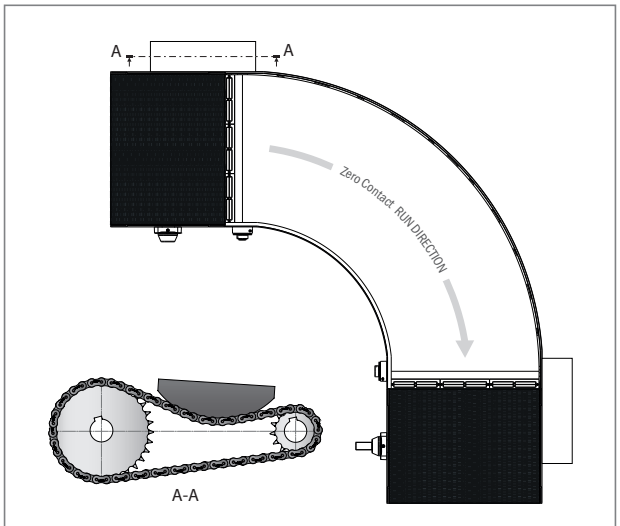

Example of application

Movex®

520

Pitch 12,7 mm
H= 8,7 mm

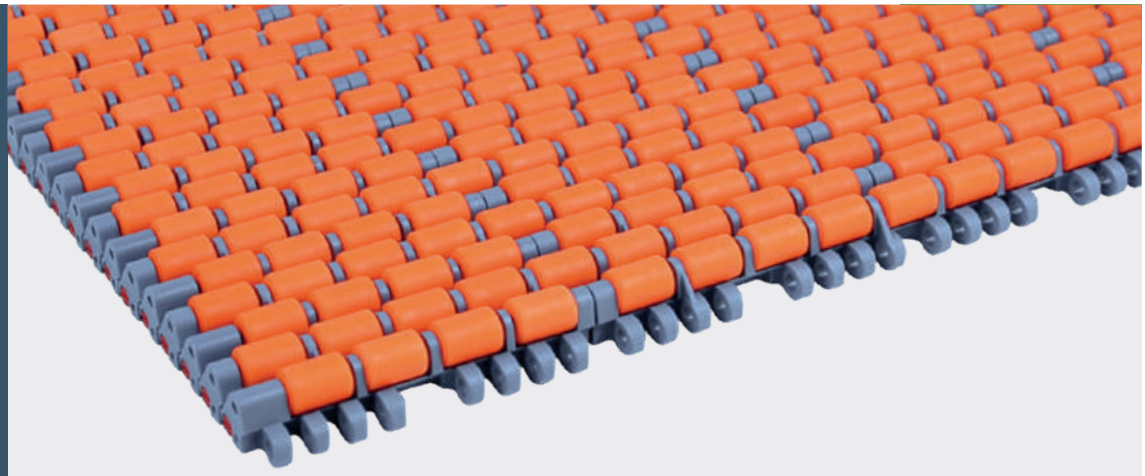

520 FT
520 HD FT
520 FTT
520 FG
520 GT
520 LBP
520 PRO LBP
520 M

Movex®

Metric Size

520 FT

Tappeto Modulare 520 FT, H=8,7 M=85
Modular Belt Series 520 FT, H=8,7 M=85 / Modulare Mattenkette 520 FT, H=8,7 M=85

CODE STRUCTURE GUIDE (Example)			
5201	03	0340	C
Series	*Material	Width	Version

pg. 269-270 | pg. 516->524 | pg. 483

Backflex radius min.: 10 mm

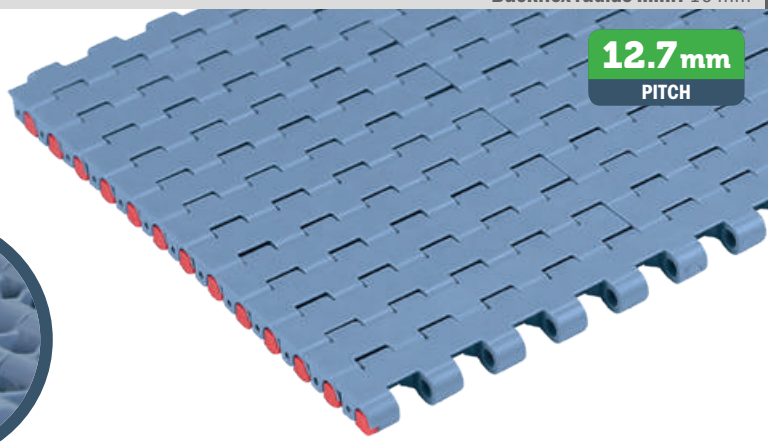

Reinforced positioner



***Material**

LFA - Code 01
Low friction Acetal

Max w. load:	21500 N/m
Weight:	7,8 kg/m²
Temp. range dry:	-40÷80 °C
Temp. range wet:	-40÷65 °C
Pin material:	PBT white

MX - Code 03
Performance PBT

Max w. load:	17500 N/m
Weight:	7,5 kg/m²
Temp. range dry:	-40÷120 °C
Temp. range wet:	-40÷60 °C
Pin material:	POM grey

MPX - Code 25
Lubricated Acetal

Max w. load:	21500 N/m
Weight:	7,8 kg/m²
Temp. range dry:	-40÷80 °C
Temp. range wet:	-40÷65 °C
Pin material:	PBT white

PFX - Code 30
Extra performance PBT

Max w. load:	17500 N/m
Weight:	7,5 kg/m²
Temp. range dry:	-40÷120 °C
Temp. range wet:	-40÷60 °C
Pin material:	POM grey

THE BEST CHOICE FOR DRY RUNNING APPLICATIONS

Version A - Standard

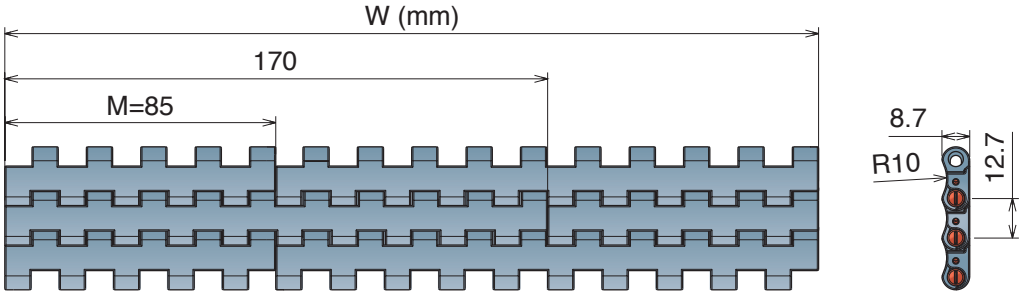

Version B - With 1 Positioner

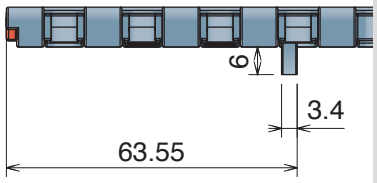

Version C - With 2 Positioner

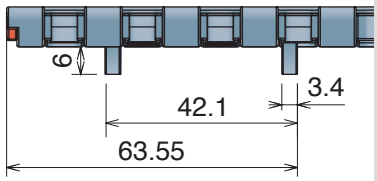

Version A - Standard

Series	Material	Width	Version
5201	*	0085	A
5201	*	0170	A
5201	*	0255	A
5201	*	0340	A
5201	*	0425	A
5201	*	0510	A
5201	*	0595	A
5201	*	0680	A
5201	*	0765	A
5201	*	0850	A
5201	*	0935	A
5201	*	1020	A
5201	*	1105	A
5201	*	1190	A
5201	*	1275	A
5201	*	1360	A
5201	*	1445	A
5201	*	1530	A

Version B - With 1 Positioner

Series	Material	Width	Version
5201	*	0085	B
5201	*	0170	B
5201	*	0255	B
5201	*	0340	B
5201	*	0425	B
5201	*	0510	B
5201	*	0595	B
5201	*	0680	B
5201	*	0765	B
5201	*	0850	B
5201	*	0935	B
5201	*	1020	B
5201	*	1105	B
5201	*	1190	B
5201	*	1275	B
5201	*	1360	B
5201	*	1445	B
5201	*	1530	B

Version C - With 2 Positioners

Series	Material	Width	Version
5201	*	0085	C
5201	*	0170	C
5201	*	0255	C
5201	*	0340	C
5201	*	0425	C
5201	*	0510	C
5201	*	0595	C
5201	*	0680	C
5201	*	0765	C
5201	*	0850	C
5201	*	0935	C
5201	*	1020	C
5201	*	1105	C
5201	*	1190	C
5201	*	1275	C
5201	*	1360	C
5201	*	1445	C
5201	*	1530	C

520 HD FT

Tappeto Modulare 520 HD, H=8,7 M=85

Modular Belt Series 520 HD, H=8,7 M=85 / Modulare Mattenkette 520 HD, H=8,7 M=85

CODE STRUCTURE GUIDE (Example)			
5211	03	0340	C
Series	*Material	Width	Version

pg. 267-268 | pg. 516->524 | pg. 482

Backflex radius min.: 10 mm

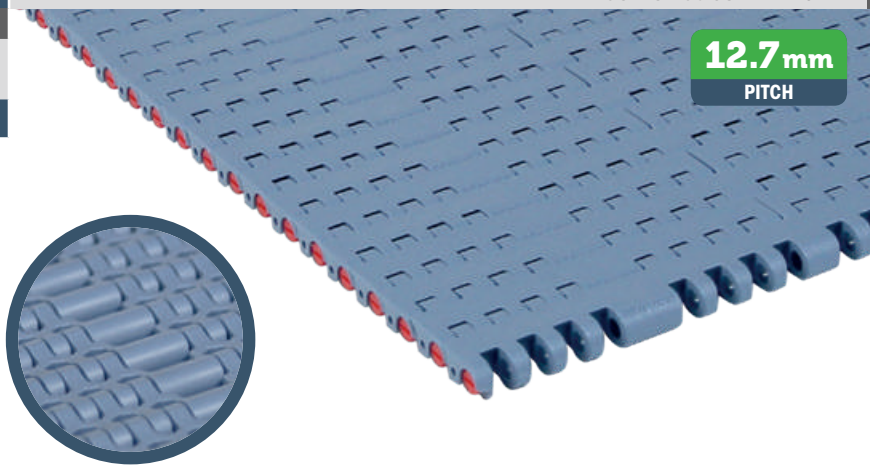

***Material**

LFA - Code 01
Low friction Acetal

Max w. load:	25500 N/m
Weight:	7,8 kg/m²
Temp. range dry:	-40÷80 °C
Temp. range wet:	-40÷65 °C
Pin material:	PBT white

MX - Code 03
Performance PBT

Max w. load:	20000 N/m
Weight:	7,5 kg/m²
Temp. range dry:	-40÷120 °C
Temp. range wet:	-40÷60 °C
Pin material:	POM grey

MPX - Code 25
Lubricated Acetal

Max w. load:	25000 N/m
Weight:	7,8 kg/m²
Temp. range dry:	-40÷80 °C
Temp. range wet:	-40÷65 °C
Pin material:	PBT white

PFX - Code 30
Extra performance PBT

Max w. load:	20000 N/m
Weight:	7,5 kg/m²
Temp. range dry:	-40÷120 °C
Temp. range wet:	-40÷60 °C
Pin material:	POM grey

THE BEST CHOICE FOR DRY RUNNING APPLICATIONS

Version A - Standard

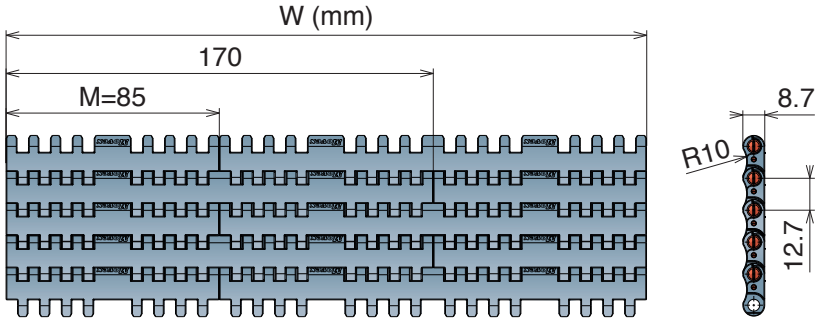

Version B - With 1 Positioner

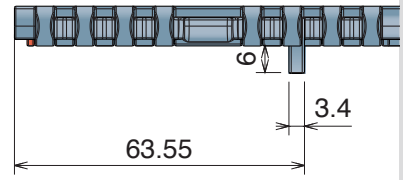

Version C - With 2 Positioner

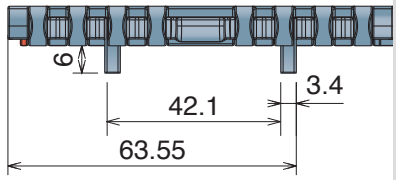

Version A - Standard

Series	Material	Width	Version
5211	*	0085	A
5211	*	0170	A
5211	*	0255	A
5211	*	0340	A
5211	*	0425	A
5211	*	0510	A
5211	*	0595	A
5211	*	0680	A

Version B - With 1 Positioner

Series	Material	Width	Version
5211	*	0085	B
5211	*	0170	B
5211	*	0255	B
5211	*	0340	B
5211	*	0425	B
5211	*	0510	B
5211	*	0595	B
5211	*	0680	B

Version C - With 2 Positioners

Series	Material	Width	Version
5211	*	0085	C
5211	*	0170	C
5211	*	0255	C
5211	*	0340	C
5211	*	0425	C
5211	*	0510	C
5211	*	0595	C
5211	*	0680	C

Advantages:

- Improved working load
- Rigidity
- Easy installation
- Product stability

520 FTT

Tappeto Modulare 520 FTT, H=8,7 M=85
Modular Belt Series 520 FTT, H=8,7 M=85 / Modulare Mattenkette 520 FTT, H=8,7 M=85

CODE STRUCTURE GUIDE (Example)			
5206	01	0170	CN
Series	*Material	Width	Version

pg. 269-270 | pg. 516->524 | pg. 483

Backflex radius min.: 10 mm

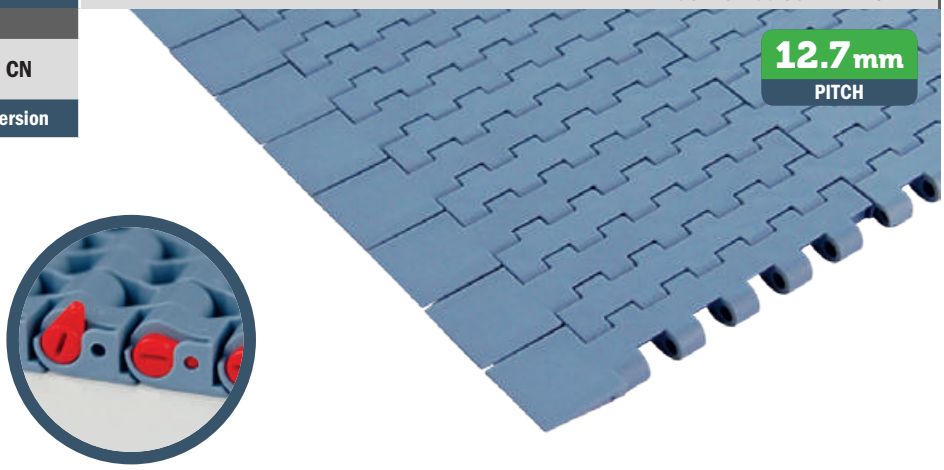

***Material**

LFA - Code 01
Low friction Acetal

Max w. load:	21500 N/m
Weight:	7,8 kg/m²
Temp. range dry:	-40÷80 °C
Temp. range wet:	-40÷65 °C
Pin material:	PBT white

PP - Code 02
Polypropylene

Max w. load:	13000 N/m
Weight:	7,5 kg/m²
Temp. range dry:	4÷80 °C
Temp. range wet:	4÷65 °C
Pin material:	PP blu

MX - Code 03
Performance PBT

Max w. load:	17500 N/m
Weight:	7,5 kg/m²
Temp. range dry:	-40÷120 °C
Temp. range wet:	40÷60 °C
Pin material:	POM grey

DKM - Code 16
Aramide Reinforced Acetal

Max w. load:	21500 N/m
Weight:	7,8 kg/m²
Temp. range dry:	-40÷80 °C
Temp. range wet:	-40÷65 °C
Pin material:	PBT white

MWX - Code 17
Polyamide Composite

Max w. load:	21500 N/m
Weight:	7,8 kg/m²
Temp. range dry:	-40÷104 °C
Temp. range wet:	NR
Pin material:	PBT white

MPX - Code 25
Lubricated Acetal

Max w. load:	21500 N/m
Weight:	7,8 kg/m²
Temp. range dry:	-40÷80 °C
Temp. range wet:	-40÷65 °C
Pin material:	PBT white

Version C

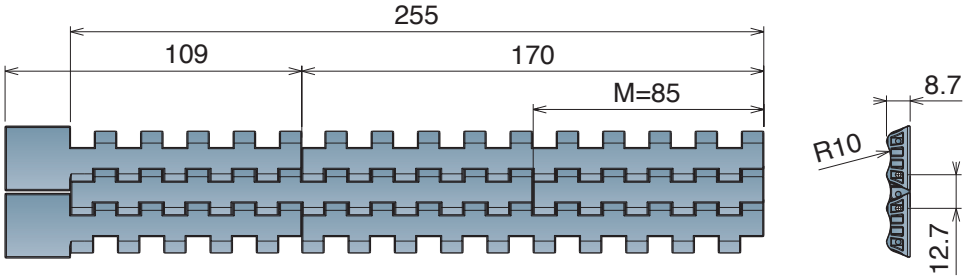

Version CN - Near

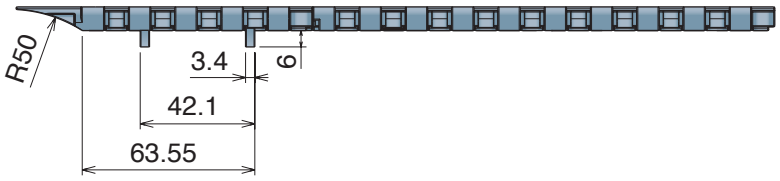

Version CO - Opposite



Version C

Series	Material	Width	Version
5206	*	0085	C

Version CN - Near

Series	Material	Width	Version
5206	*	0170	CN
5206	*	0255	CN

Version CO - Opposite

Series	Material	Width	Version
5206	*	0170	CO
5206	*	0255	CO

On request available with bigger/different width

520 FG Open Surface 25% Tappeto Modulare 520 FG, H=8,7 M=85

Modular Belt Series 520 FG, H=8,7 M=85 / Modulare Mattenkette 520 FG, H=8,7 M=85

CODE STRUCTURE GUIDE (Example)			
5202	01	0765	A
Series	*Material	Width	Version

Backflex radius min.: 10 mm

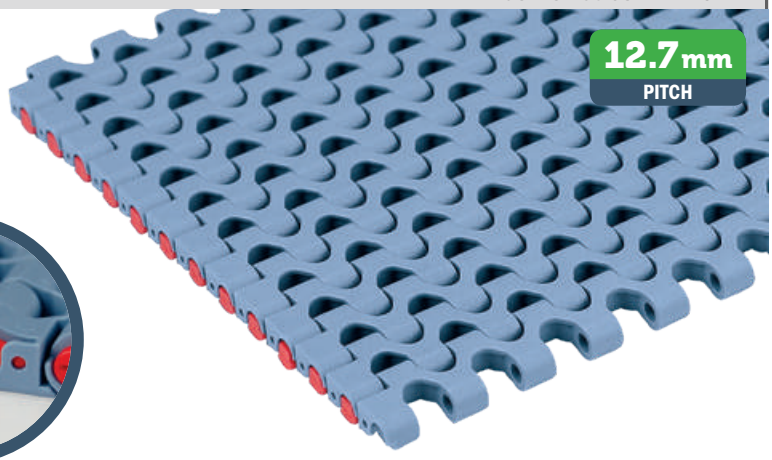

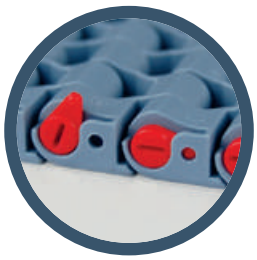

pg. 269-270 pg. 516->524 pg. 483

*Material

LFA - Code 01
Low friction Acetal

Max w. load:	21500 N/m
Weight:	7,5 kg/m²
Temp. range dry:	-40÷80 °C
Temp. range wet:	-40÷65 °C
Pin material:	PBT white

PP - Code 02
Polypropylene

Max w. load:	13000 N/m
Weight:	7,5 kg/m²
Temp. range dry:	4÷80 °C
Temp. range wet:	4÷65 °C
Pin material:	PP blu

MX - Code 03
Performance PBT

Max w. load:	17500 N/m
Weight:	7,2 kg/m²
Temp. range dry:	-40÷120 °C
Temp. range wet:	-40÷60 °C
Pin material:	POM grey

DKM - Code 16
Aramide Reinforced Acetal

Max w. load:	21500 N/m
Weight:	7,5 kg/m²
Temp. range dry:	-40÷80 °C
Temp. range wet:	-40÷65 °C
Pin material:	PBT white

MWX - Code 17
Polyamide Composite

Max w. load:	21500 N/m
Weight:	7,8 kg/m²
Temp. range dry:	-40÷104 °C
Temp. range wet:	NR
Pin material:	PBT white

MPX - Code 25
Lubricated Acetal

Max w. load:	21500 N/m
Weight:	7,5 kg/m²
Temp. range dry:	-40÷80 °C
Temp. range wet:	-40÷65 °C
Pin material:	PBT white

Version A - Standard

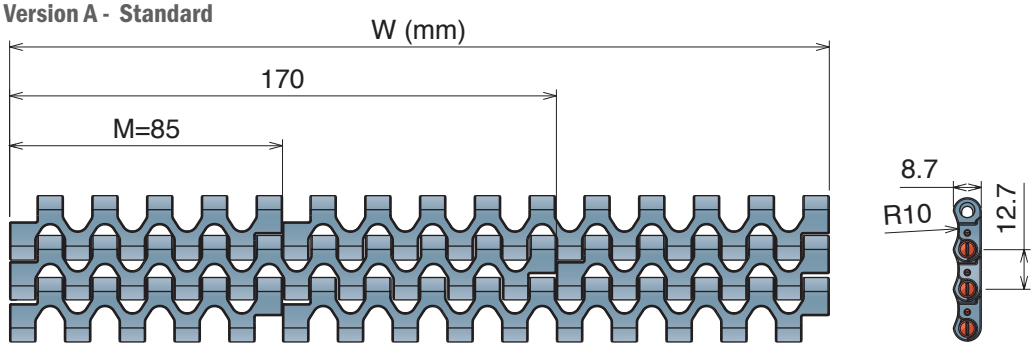

Version B - With 1 Positioner

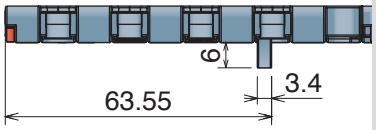

Version C - With 2 Positioner

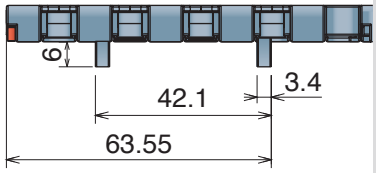

Version A - Standard

Series	Material	Width	Version
5202	*	0085	A
5202	*	0170	A
5202	*	0255	A
5202	*	0340	A
5202	*	0425	A
5202	*	0510	A
5202	*	0595	A
5202	*	0680	A
5202	*	0765	A
5202	*	0850	A
5202	*	0935	A
5202	*	1020	A
5202	*	1105	A
5202	*	1190	A
5202	*	1275	A
5202	*	1360	A
5202	*	1445	A
5202	*	1530	A

Version B - With 1 Positioner

Series	Material	Width	Version
5202	*	0085	B
5202	*	0170	B
5202	*	0255	B
5202	*	0340	B
5202	*	0425	B
5202	*	0510	B
5202	*	0595	B
5202	*	0680	B
5202	*	0765	B
5202	*	0850	B
5202	*	0935	B
5202	*	1020	B
5202	*	1105	B
5202	*	1190	B
5202	*	1275	B
5202	*	1360	B
5202	*	1445	B
5202	*	1530	B

Version C - With 2 Positioners

Series	Material	Width	Version
5202	*	0085	C
5202	*	0170	C
5202	*	0255	C
5202	*	0340	C
5202	*	0425	C
5202	*	0510	C
5202	*	0595	C
5202	*	0680	C
5202	*	0765	C
5202	*	0850	C
5202	*	0935	C
5202	*	1020	C
5202	*	1105	C
5202	*	1190	C
5202	*	1275	C
5202	*	1360	C
5202	*	1445	C
5202	*	1530	C

Metric Size

520 GT

Tappeto Modulare 520 GT, H=8,7 M=85
Modular Belt Series 520 GT, H=8,7 M=85 / Modulare Mattenkette 520 GT, H=8,7 M=85

CODE STRUCTURE GUIDE (Example)			
5203	02	0510	B
Series	*Material	Width	Version

pg. 269-270 | pg. 516->524 | pg. 483

Backflex radius min.: 20 mm

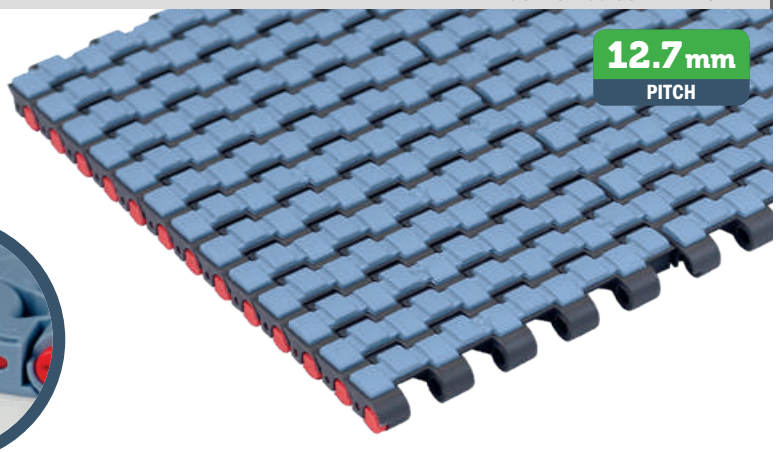

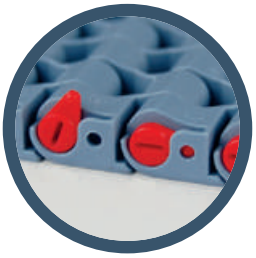

***Material**

LFA - Code 01
Low friction Acetal

Max w. load:	21500 N/m
Weight:	9,0 kg/m²
Temp. range dry:	-40÷80 °C
Temp. range wet:	-40÷65 °C
Pin material:	PBT white
Hardness of Grip top Rubber:	75 ShA

PP - Code 02
Polypropylene

Max w. load:	13000 N/m
Weight:	7,5 kg/m²
Temp. range dry:	4÷80 °C
Temp. range wet:	4÷65 °C
Pin material:	PP blu
Hardness of Grip top Rubber:	75 ShA

MX - Code 03
Performance PBT

Max w. load:	17500 N/m
Weight:	9,3 kg/m²
Temp. range dry:	-40÷120 °C
Temp. range wet:	-40÷60 °C
Pin material:	POM grey
Hardness of Grip top Rubber:	75 ShA

Available also with 50 ShA Rubber

Version A - Standard

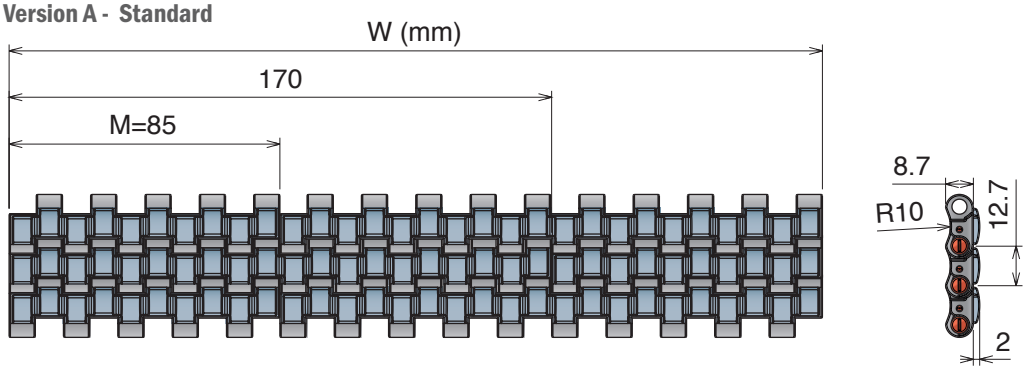

Version B - With 1 Positioner

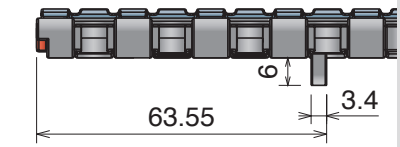

Version C - With 2 Positioner

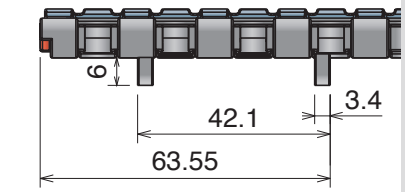

Version A - Standard

Series	Material	Width	Version
5203	*	0085	A
5203	*	0170	A
5203	*	0255	A
5203	*	0340	A
5203	*	0425	A
5203	*	0510	A
5203	*	0595	A
5203	*	0680	A
5203	*	0765	A
5203	*	0850	A
5203	*	0935	A
5203	*	1020	A
5203	*	1105	A
5203	*	1190	A
5203	*	1275	A
5203	*	1360	A
5203	*	1445	A
5203	*	1530	A

Version B - With 1 Positioner

Series	Material	Width	Version
5203	*	0085	B
5203	*	0170	B
5203	*	0255	B
5203	*	0340	B
5203	*	0425	B
5203	*	0510	B
5203	*	0595	B
5203	*	0680	B
5203	*	0765	B
5203	*	0850	B
5203	*	0935	B
5203	*	1020	B
5203	*	1105	B
5203	*	1190	B
5203	*	1275	B
5203	*	1360	B
5203	*	1445	B
5203	*	1530	B

Version C - With 2 Positioners

Series	Material	Width	Version
5203	*	0085	C
5203	*	0170	C
5203	*	0255	C
5203	*	0340	C
5203	*	0425	C
5203	*	0510	C
5203	*	0595	C
5203	*	0680	C
5203	*	0765	C
5203	*	0850	C
5203	*	0935	C
5203	*	1020	C
5203	*	1105	C
5203	*	1190	C
5203	*	1275	C
5203	*	1360	C
5203	*	1445	C
5203	*	1530	C

520 LBP

Tappeto Modulare 520 LBP, H=8,7 M=85
Modular Belt Series 520 LBP, H=8,7 M=85 / Modulare Mattenkette 520 LBP, H=8,7 M=85

CODE STRUCTURE GUIDE (Example)			
5204	01	1530	C
Series	*Material	Width	Version

pg. 269-270 | pg. 516->524 | pg. 483

Backflex radius min.: 65 mm

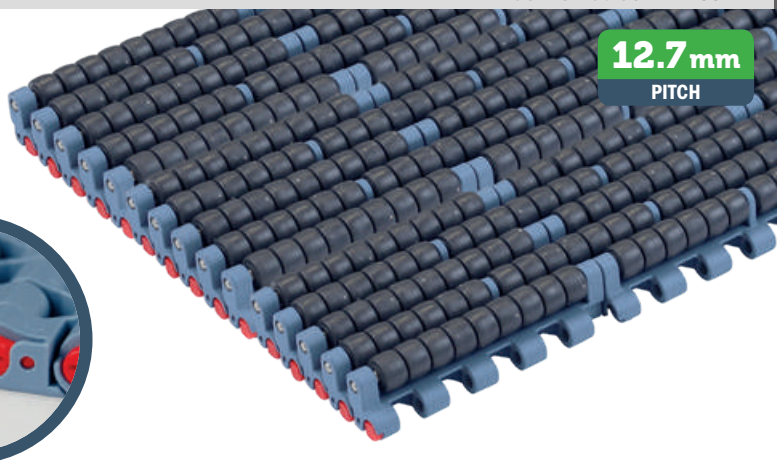

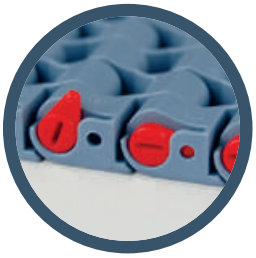

Version A - Standard

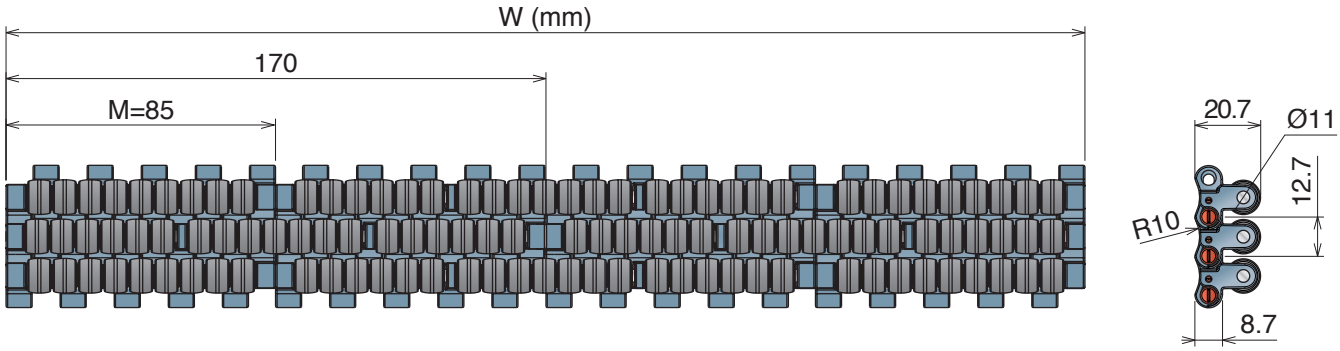

***Material**

LFA - Code 01
Low friction Acetal

Max w. load:	21500 N/m
Weight:	24,0 kg/m²
Temp. range dry:	-40÷80 °C
Temp. range wet:	1÷65 °C
Pin material:	PBT white

Version B - With 1 Positioner

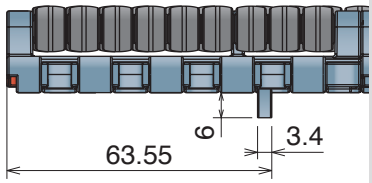

Version C - With 2 Positioner

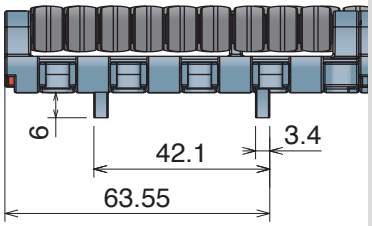

Version A - Standard

Series	Material	Width	Version
5204	*	0085	A
5204	*	0170	A
5204	*	0255	A
5204	*	0340	A
5204	*	0425	A
5204	*	0510	A
5204	*	0595	A
5204	*	0680	A
5204	*	0765	A
5204	*	0850	A
5204	*	0935	A
5204	*	1020	A
5204	*	1105	A
5204	*	1190	A
5204	*	1275	A
5204	*	1360	A
5204	*	1445	A
5204	*	1530	A

Version B - With 1 Positioner

Series	Material	Width	Version
5204	*	0085	B
5204	*	0170	B
5204	*	0255	B
5204	*	0340	B
5204	*	0425	B
5204	*	0510	B
5204	*	0595	B
5204	*	0680	B
5204	*	0765	B
5204	*	0850	B
5204	*	0935	B
5204	*	1020	B
5204	*	1105	B
5204	*	1190	B
5204	*	1275	B
5204	*	1360	B
5204	*	1445	B
5204	*	1530	B

Version C - With 2 Positioners

Series	Material	Width	Version
5204	*	0085	C
5204	*	0170	C
5204	*	0255	C
5204	*	0340	C
5204	*	0425	C
5204	*	0510	C
5204	*	0595	C
5204	*	0680	C
5204	*	0765	C
5204	*	0850	C
5204	*	0935	C
5204	*	1020	C
5204	*	1105	C
5204	*	1190	C
5204	*	1275	C
5204	*	1360	C
5204	*	1445	C
5204	*	1530	C

520 PRO LBP

Tappeto Modulare 520 PRO LBP, H=8,7 M=85
Modular Belt Series 520 PRO LBP, H=8,7 M=85 / Modulare Mattenkette 520 PRO LBP, H=8,7 M=85

CODE STRUCTURE GUIDE (Example)			
5207	01	0085	C
Series	Material	Width	Version

pg. 267-268 | pg. 516->524 | pg. 482

Backflex radius min.: 40 mm

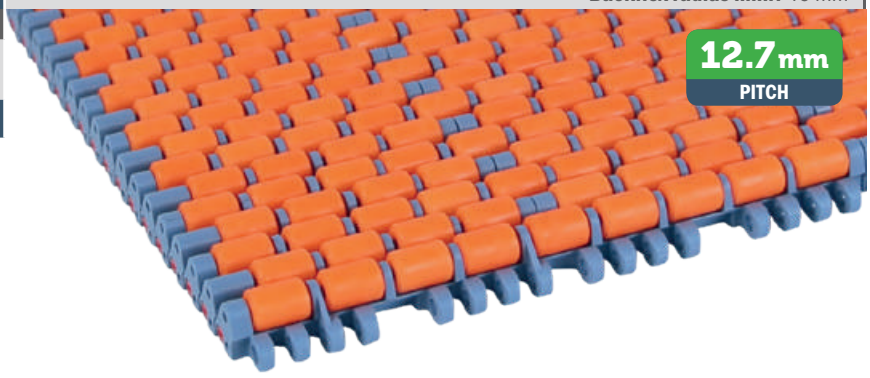

Standard with PFX rollers

Material

LFA - Code 01
Low friction Acetal

Max w. load:	25000 N/m
Weight SS pin:	19,0 kg/m²
Weight Plastic pin:	15,3 kg/m²
Temp. range dry:	-40÷80 °C
Temp. range wet:	-40÷65 °C
Pin material:	PBT white

PFX Roller

THE BEST CHOICE FOR DRY RUNNING APPLICATIONS

Patented



Bottom view

Version A - Standard

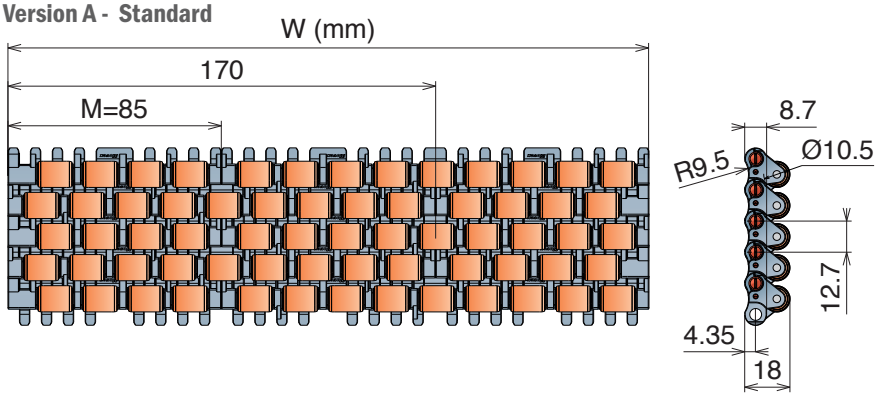

Version B - With 1 Positioner

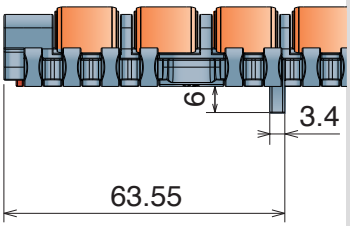

Version C - With 2 Positioner

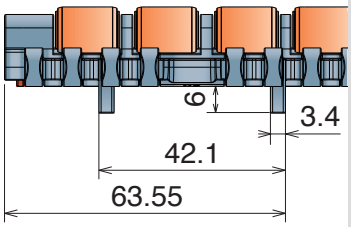



Stainless steel Pin

Series	Material	Width	*Version
5209	01	0085	*
5209	01	0170	*
5209	01	0255	*
5209	01	0340	*
5209	01	0425	*
5209	01	0510	*
5209	01	0595	*
5209	01	0680	*



Plastic Pin

Series	Material	Width	*Version
5210	01	0085	*
5210	01	0170	*
5210	01	0255	*
5210	01	0340	*
5210	01	0425	*
5210	01	0510	*
5210	01	0595	*
5210	01	0680	*

*Version					
Standard	Add **A**	With 1 Positioner	Add **B**	With 2 Positioners	Add **C**

520 M

Tappeto Modulare 520 M, H=8,7 K 330
Modular Belt Series 520 M, H=8,7 K 330 / Modulare Mattenkette 520 M, H=8,7 K 330

Part	Article-Nr.	Ref.	A	Weight	*Material
1193	1193019330	520 M K330	83,8	1,11	LFA
1193	1193039330	520 M K330	83,8	1,11	MX

Backflex radius min.: 15 mm

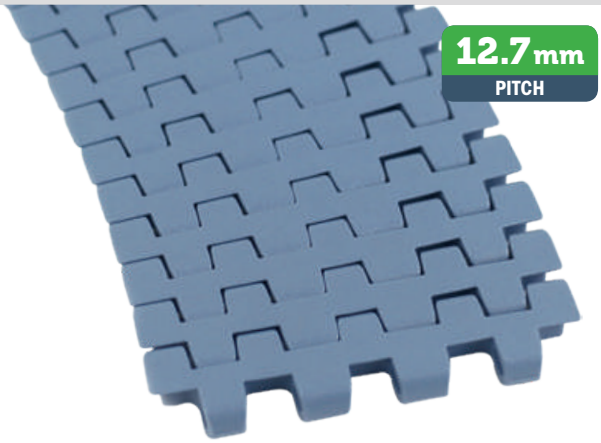

10 feet
3.048 m
240 links

pg. 269-270
pg. 155->161
pg. 516->524

Magnetic System

***Material**

LFA - Code 01
Low friction Acetal

Max w. load:	2500 N/m
Weight:	7,5 kg/m²
Temp. range dry:	-40÷80 °C
Temp. range wet:	-40÷65 °C
Pin material:	Ferritic Stainless Steel

MX - Code 03
Performance PBT

Max w. load:	2000 N/m
Weight:	7,2 kg/m²
Temp. range dry:	-40÷120 °C
Temp. range wet:	-40÷60 °C
Pin material:	Ferritic Stainless Steel

Version A - Standard

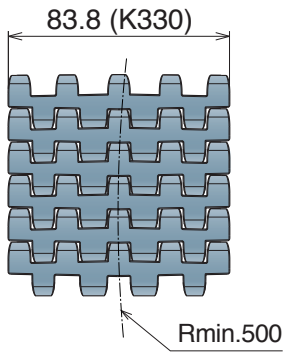

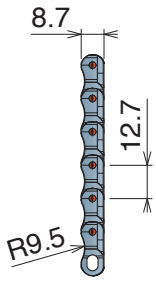

Advantages:

No side transfer
Space saving

Cost savings:

Less belt required
Less conveyor length required
Less guides required
Less drives required

Coventional layout

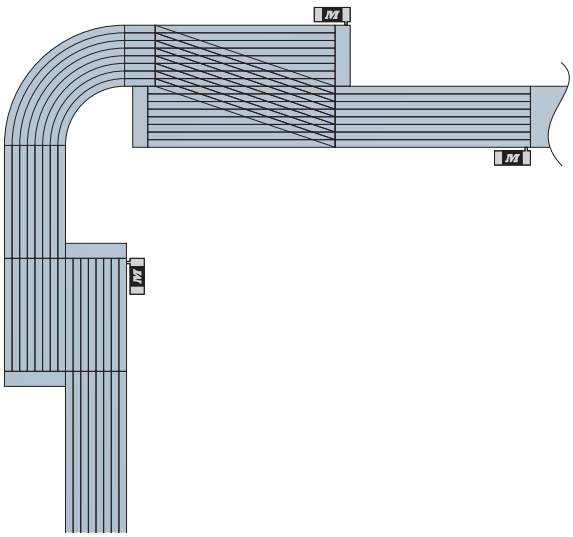

Layout with 520 M K330

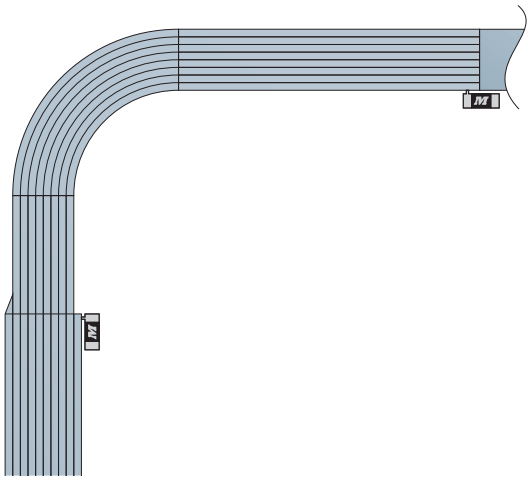

Transfer plate system recommended

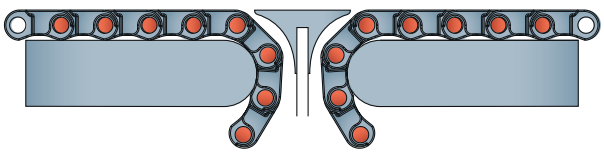

521

Pitch 12,7 mm
H= 8,7 mm



Imperial Size

521 FT

521 FT

Tappeto Modulare 521 FT, H=8,7 M=7,5”
Modular Belt Series 521 FT, H=8,7 M=7,5” / Modulare Mattenkette 521 FT, H=8,7 M=7,5”

CODE STRUCTURE GUIDE (Example)			
5311	01	9750	C
Series	*Material	Width	Version

pg. 267-268 | pg. 516->524 | pg. 484

Backflex radius min.: 10 mm

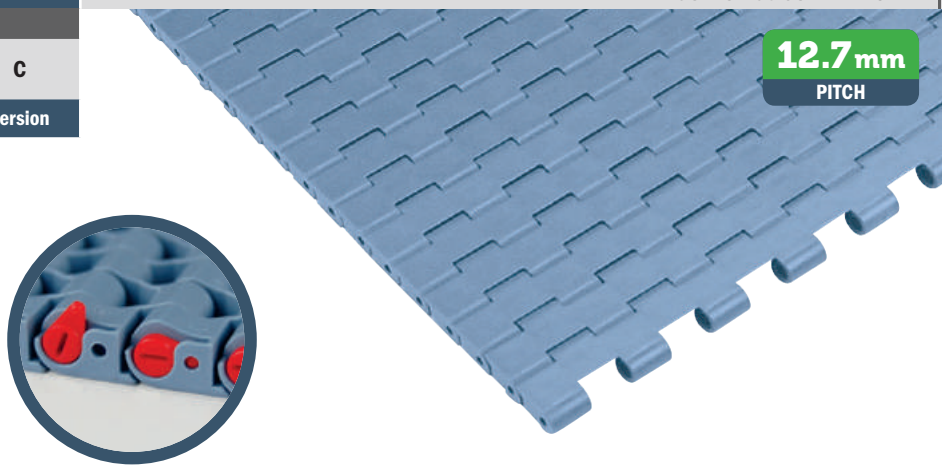

*Material

LFA - Code 01
Low friction Acetal

Max w. load:	21500 N/m
Weight:	8,0 kg/m²
Temp. range dry:	-40÷80 °C
Temp. range wet:	-40÷65 °C
Pin material:	PBT white

MX - Code 03
Performance PBT

Max w. load:	17500 N/m
Weight:	7,8 kg/m²
Temp. range dry:	-40÷120 °C
Temp. range wet:	-40÷60 °C
Pin material:	POM grey

DKM - Code 16
Aramide Reinforced Acetal

Max w. load:	21500 N/m
Weight:	8,0 kg/m²
Temp. range dry:	-40÷80 °C
Temp. range wet:	-40÷65 °C
Pin material:	PBT white

MWX - Code 17
Polyamide Composite

Max w. load:	21500 N/m
Weight:	8,3 kg/m²
Temp. range dry:	-40÷104 °C
Temp. range wet:	NR
Pin material:	PBT white

MPX - Code 25
Lubricated Acetal

Max w. load:	21500 N/m
Weight:	8,0 kg/m²
Temp. range dry:	-40÷80 °C
Temp. range wet:	-40÷65 °C
Pin material:	PBT white

Version A - Standard

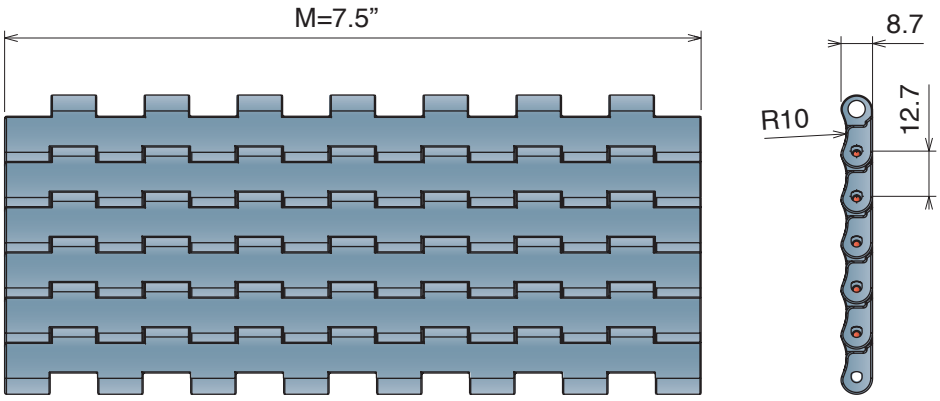

Version C - With 2 Positioner

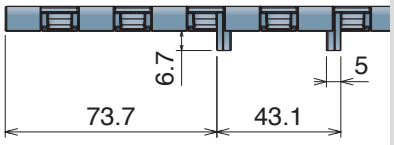

Version A - Standard

Series	Material	Width	Version
5311	*	9750	A

Version C - With 2 Positioners

Series	Material	Width	Version
5311	*	9750	C

228

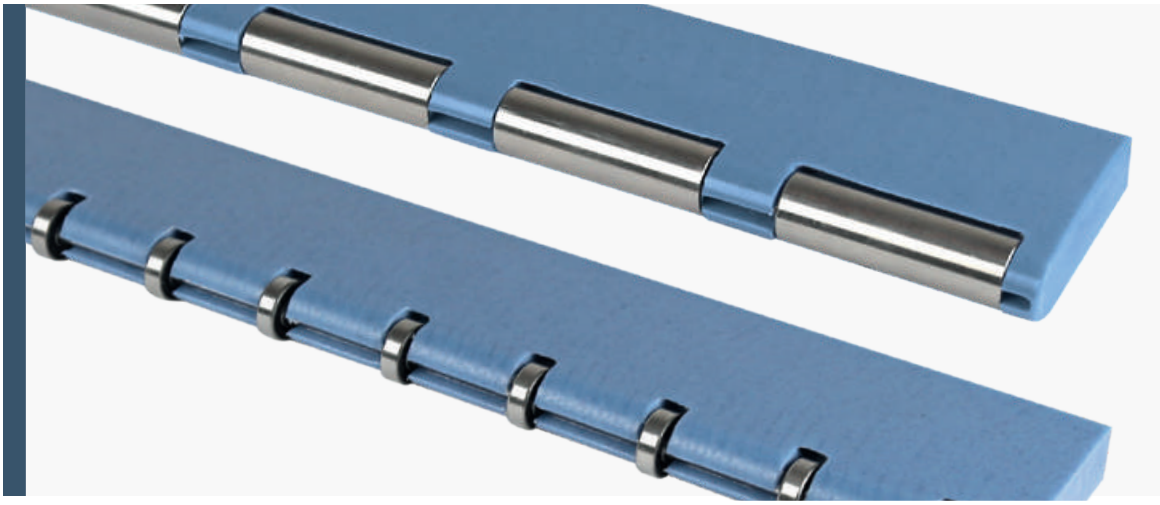

228 *One piece with Rollers* / 228 *One piece with Bearings*

228 *Standard transfer plate*

228 *Transfer plate with Rollers*

228 *Transfer plate with Bearings*

228 *Transfer plate for modular belt with Positioner and Bearings*

228 *Transfer plate for Micropitch*

228 *One piece*

Piatto di trasferimento / *Transfer Plate* / *Überschubplatte*

Patented

Used with belt series 520 - 521 - 525 - 530

Transfer plate with rollers

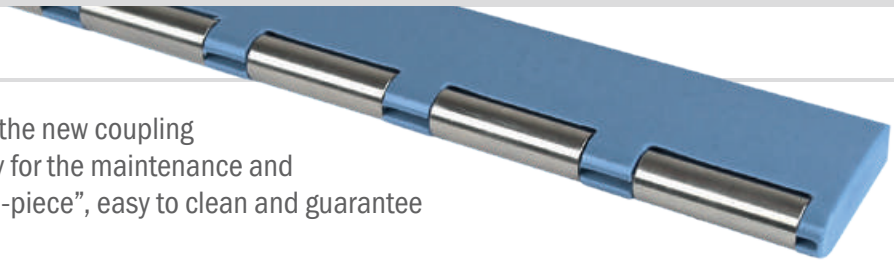

The ***One piece*** patent, thanks to the new coupling system minimise the time necessary for the maintenance and allow the possibility to create a “one-piece”, easy to clean and guarantee for a greater hygiene.

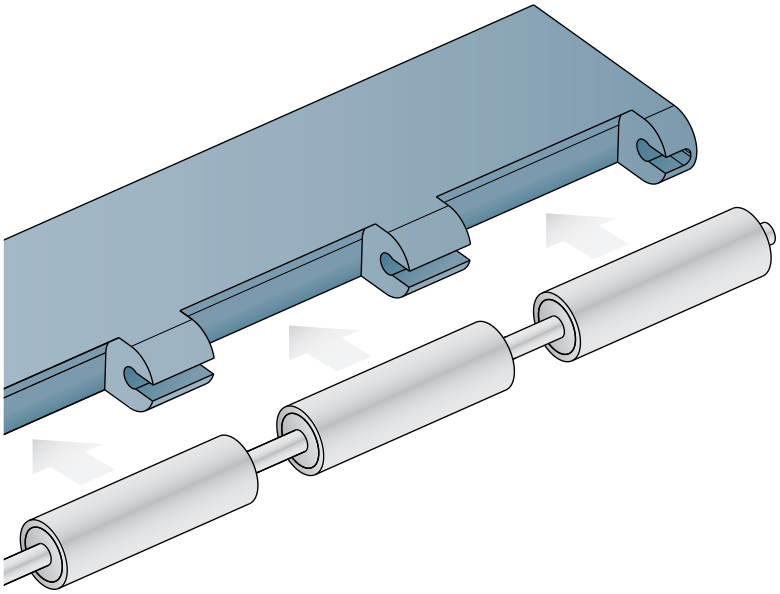

Advantages:

- Single piece
- Improved strenght
- Fast maintenance
- Greater hygiene
- Easy clean
- Less fixing point

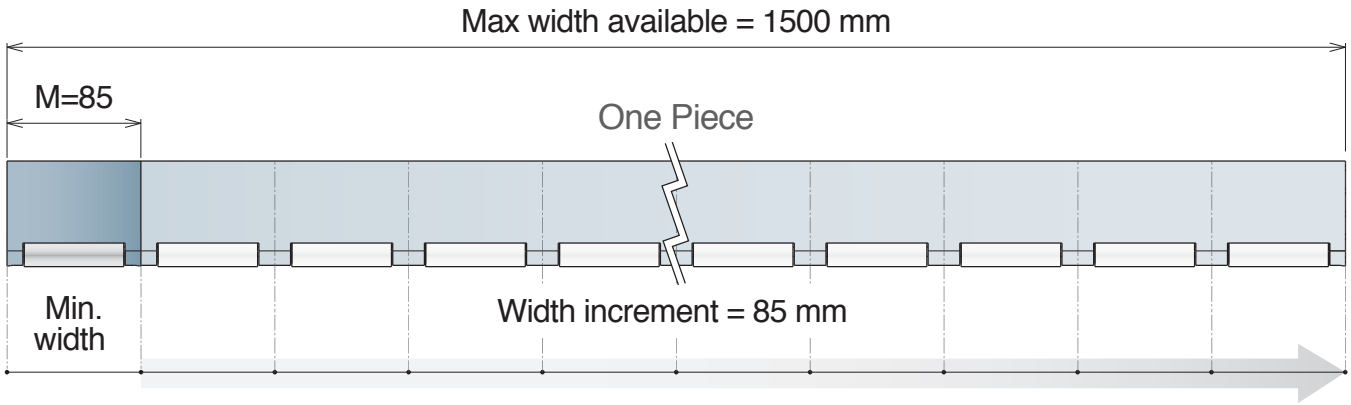

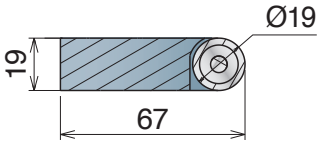

Part	Article-Nr.	K
228	2280425B	425
228	2280510B	510
228	2280595B	595
228	2280680B	680
228	2280765B	765
228	2280850B	850

Available different widths and with holes on request.

Order table

Width		Holes	☐ YES ☐ NO

Characteristic

Materiale / Material / Materialien:
BluLub
Rollers: Acciaio inox/Stainless steel/Edelstahl

New

228 One piece

Piatto di trasferimento / Transfer Plate / Überschubplatte

Patented

Used with belt series 520 - 521 - 525 - 530

Transfer plate with bearings



The **One piece** patent, thanks to the new coupling system minimise the time necessary for the maintenance and allow the possibility to create a “one-piece”, easy to clean and guarantee for a greater hygiene.

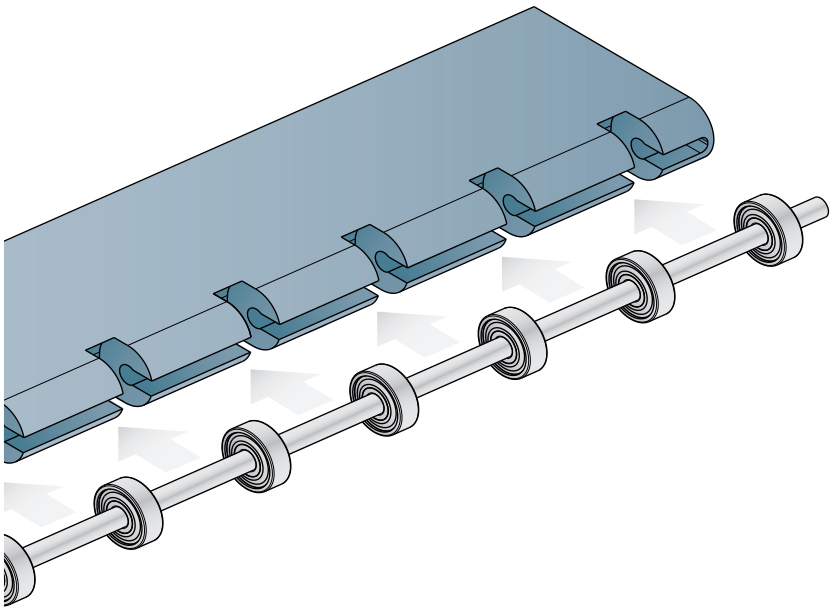

Advantages:

- Single piece
- Improved strenght
- Fast maintenance
- Greater hygiene
- Easy clean
- Less fixing point

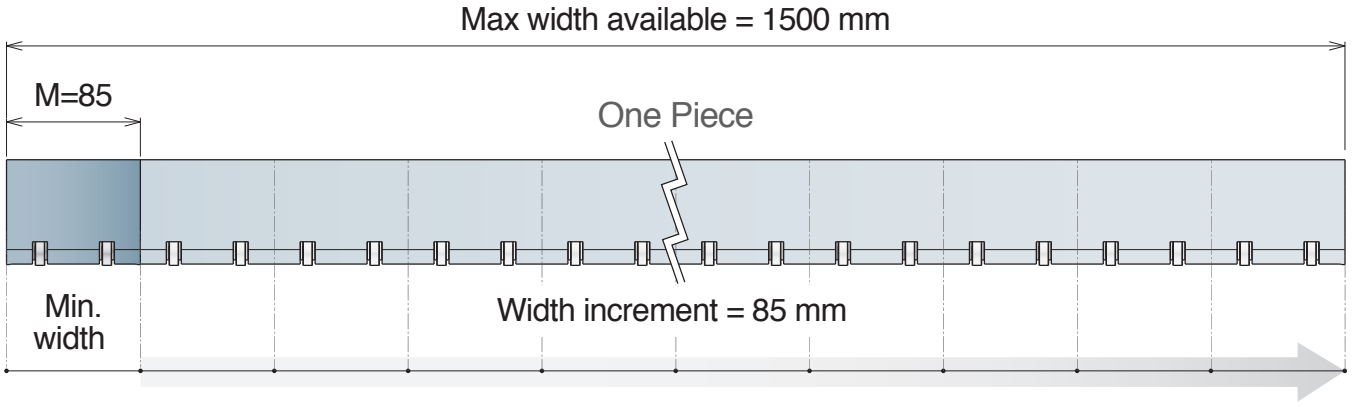

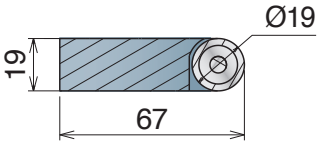

Part	Article-Nr.	K
228	2280425C	425
228	2280510C	510
228	2280595C	595
228	2280680C	680
228	2280765C	765
228	2280850C	850

Available different widths and with holes on request.

Order table

Width		Holes	☐ YES ☐ NO

Characteristic

228 Piatto di trasferimento
Transfer Plate / Überschubplatte

Used with belt series 520 - 521 - 525 - 530

Standard transfer plate



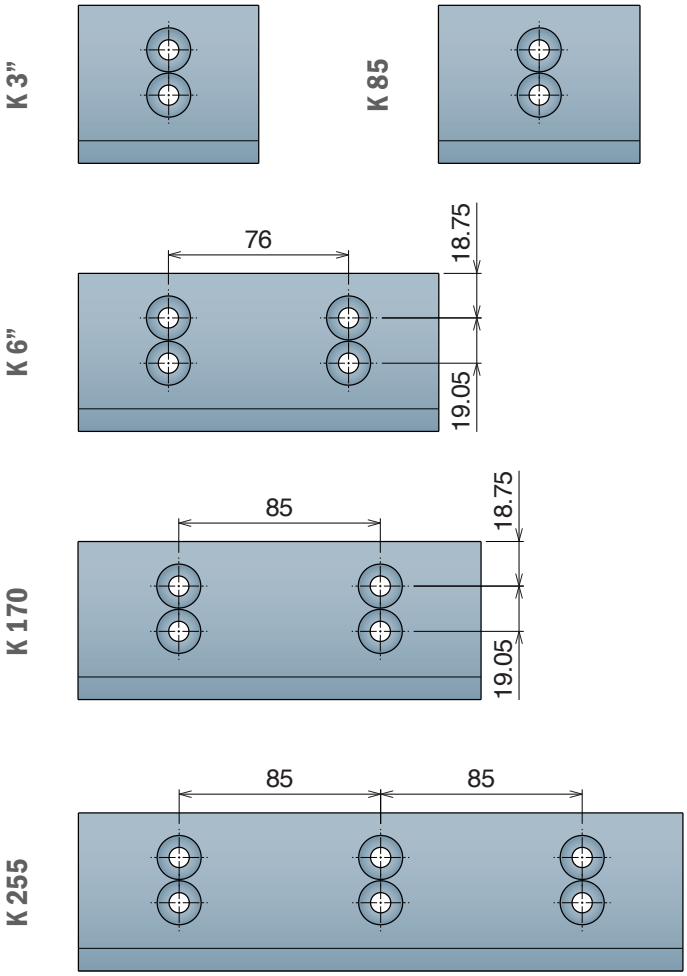

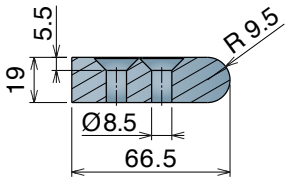

Part	Article-Nr.	K
228	22801	85
228	22802	170
228	22803	255
228	22808	76
228	22809	152,4

Available in different widths on request.

Transfer plate with rollers

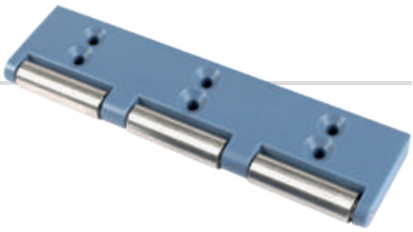

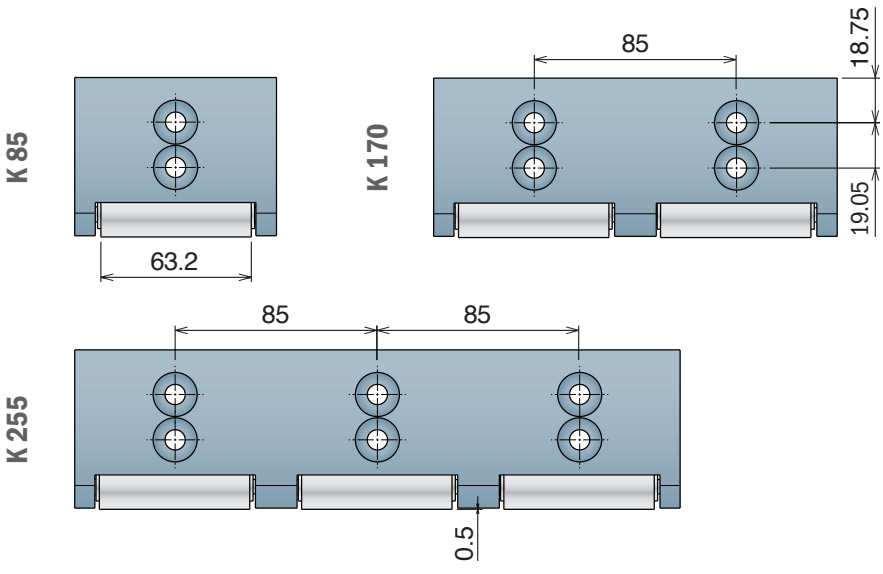

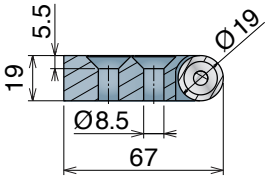

Part	Article-Nr.	K
228	22814	85
228	22815	170
228	22816	255

Available in different widths on request.

Materiale / *Material / Materialien:*
BluLub®
Rollers: Acciaio inox/*Stainless steel/Edelstahl*

228 Piatto di trasferimento
Transfer Plate / Überschubplatte

Used with belt series 520 - 521 - 525 - 530

Transfer plate with bearings



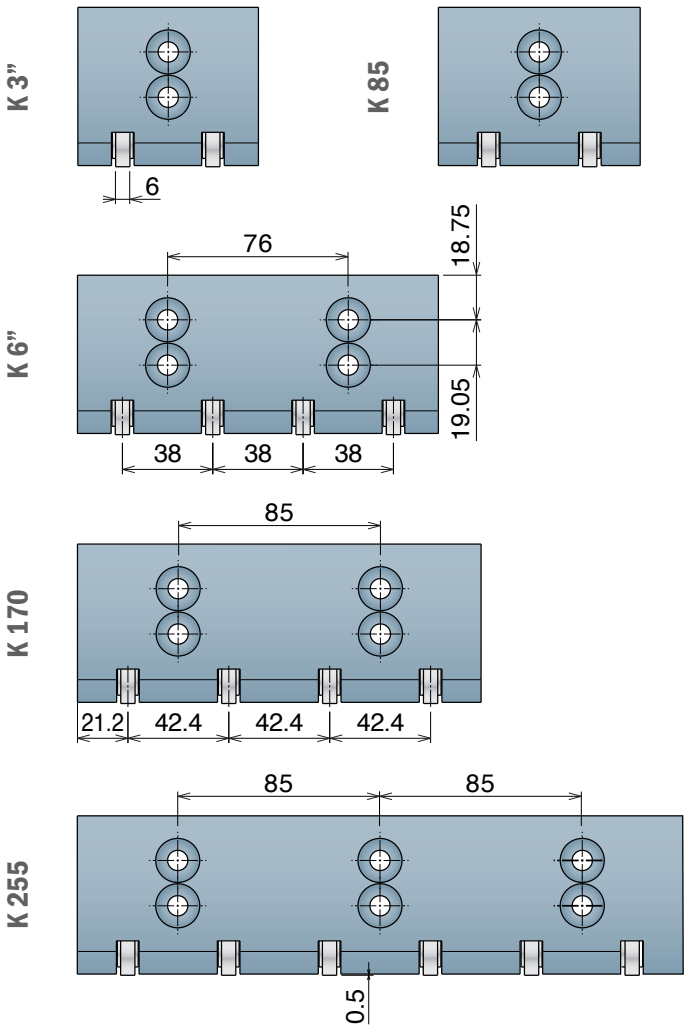

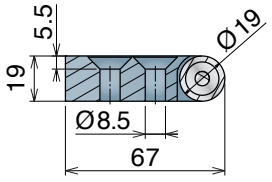

Part	Article-Nr.	K
228	22861	75.8
228	22811	85
228	22862	151.8
228	22812	170
228	22813	255

Available in different widths on request.

INSTALLATION TIPS

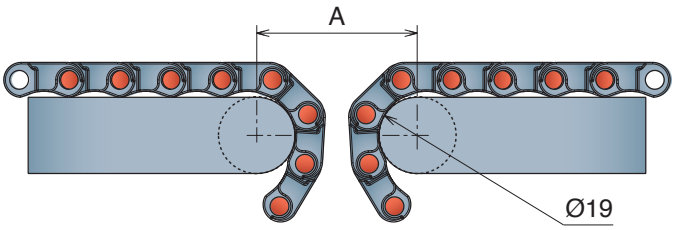

Belt type 1	Belt type 2	A
FT/ FG	FT/ FG	40
FT/ FG	GT	42
FT/ FG	LBP	53
GT	GT	44
GT	LBP	55
LBP	LBP	65



Transfer plate with roller

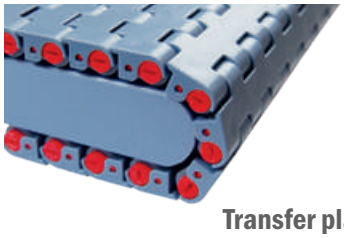

Transfer plate

228 Piatto di trasferimento
Transfer Plate / Überschubplatte

Used with belt series 520 - 525

Transfer plate for modular belt with positioner and Bearings



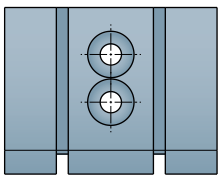

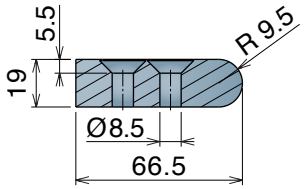

Part	Article-Nr.	K
228	22807	85

Available in different widths on request.

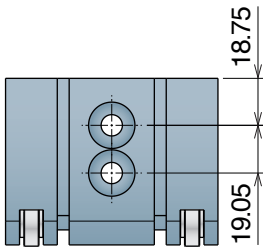

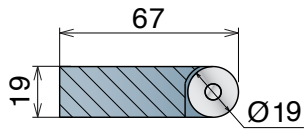

Part	Article-Nr.	K
228	22817	85

Available in different widths on request.

228 Piatto di trasferimento
Transfer Plate / Überschubplatte

Used with belt series 510

Transfer plate for micropitch



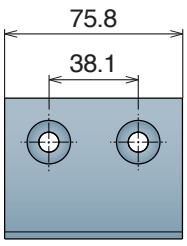

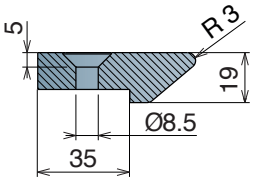

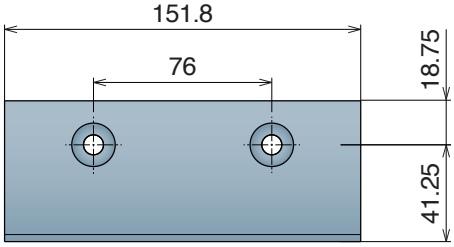

Part	Article-Nr.	K
228	22818	75.8
228	22819	151.8

Available in different widths on request.

590

Pitch 19,05 mm
H= 8,7 mm



Imperial Size

590 FT
590 FT *One track Belt*
590 FTT

590 FT

Tappeto Modulare 590 FT, H=8,7 M=3”
Modular Belt Series 590 FT, H=8,7 M=3” / Modulare Mattenkette 590 FT, H=8,7 M=3”

CODE STRUCTURE GUIDE (Example)			
5301	01	0009	C
Series	*Material	Width	Version

pg. 272 | pg. 516->524 | pg. 485

Backflex radius min.: 25 mm

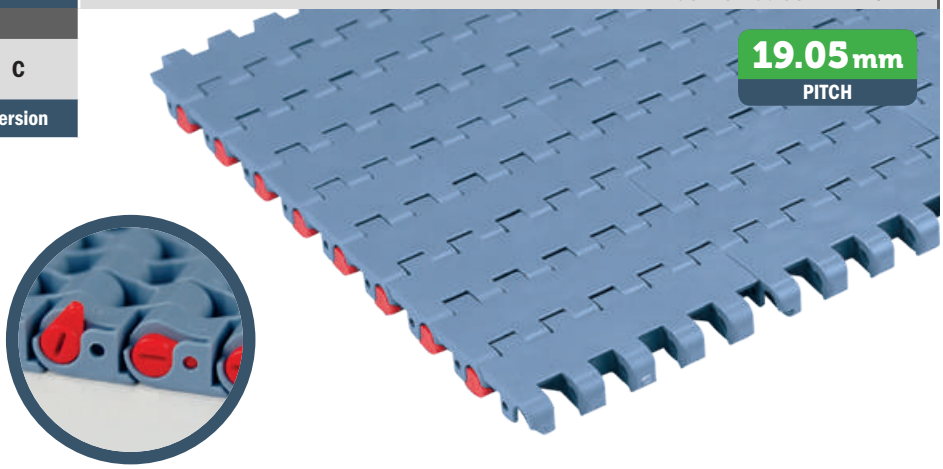

***Material**

LFA - Code 01
Low friction Acetal

Max w. load:	30000 N/m
Weight:	7,2 kg/m²
Temp. range dry:	-40÷80 °C
Temp. range wet:	-40÷65 °C
Pin material:	PBT white

MX - Code 03
Performance PBT

Max w. load:	24000 N/m
Weight:	7,0 kg/m²
Temp. range dry:	-40÷120 °C
Temp. range wet:	-40÷60 °C
Pin material:	POM grey

MPX - Code 25
Lubricated Acetal

Max w. load:	30000 N/m
Weight:	7,2 kg/m²
Temp. range dry:	-40÷80 °C
Temp. range wet:	-40÷65 °C
Pin material:	PBT white

Version A - Standard

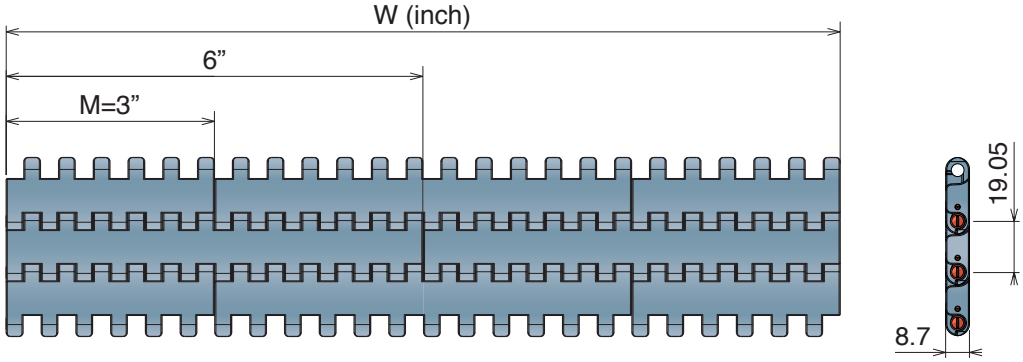

Version C - With 2 Positioner

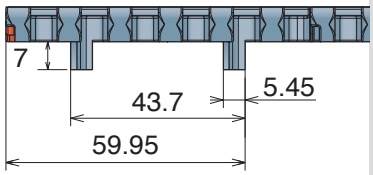

Version A - Standard

Series	Material	Width	Version
5301	*	0003	A
5301	*	0006	A
5301	*	0009	A
5301	*	0012	A
5301	*	0015	A
5301	*	0018	A
5301	*	0021	A
5301	*	0024	A
5301	*	0027	A
5301	*	0030	A
5301	*	0033	A
5301	*	0036	A
5301	*	0039	A
5301	*	0042	A
5301	*	0045	A
5301	*	0048	A
5301	*	0051	A
5301	*	0054	A

Version C - With 2 Positioners

Series	Material	Width	Version
5301	*	0003	C
5301	*	0006	C
5301	*	0009	C
5301	*	0012	C
5301	*	0015	C
5301	*	0018	C
5301	*	0021	C
5301	*	0024	C
5301	*	0027	C
5301	*	0030	C
5301	*	0033	C
5301	*	0036	C
5301	*	0039	C
5301	*	0042	C
5301	*	0045	C
5301	*	0048	C
5301	*	0051	C
5301	*	0054	C

590 FT *One track Belt* Tappeto Modulare 590 FT, H=8,7

Modular Belt Series 590 FT, H=8,7 / Modulare Mattenkette 590 FT, H=8,7

CODE STRUCTURE GUIDE (Example)			
5301	03	9325	C
Series	*Material	Width	Version

pg. 272 | pg. 516->524 | pg. 486

Backflex radius min.: 25 mm

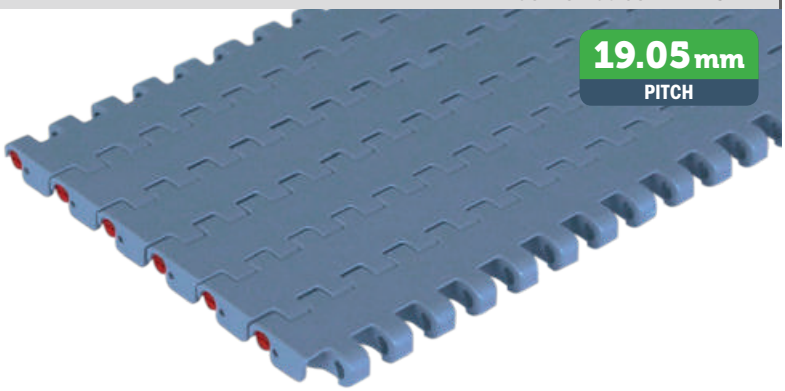

*Material	
LFA - Code 01 *Low friction Acetal*	
Max w. load:	30000 N/m
Weight:	7,2 kg/m²
Temp. range dry:	-40÷80 °C
Temp. range wet:	-40÷65 °C
Pin material:	PBT white
MX - Code 03 *Performance PBT*	
Max w. load:	24000 N/m
Weight:	7,0 kg/m²
Temp. range dry:	-40÷120 °C
Temp. range wet:	-40÷60 °C
Pin material:	POM grey
MPX - Code 25 *Lubricated Acetal*	
Max w. load:	30000 N/m
Weight:	7,2 kg/m²
Temp. range dry:	-40÷80 °C
Temp. range wet:	-40÷65 °C
Pin material:	PBT white

Version A - Standard

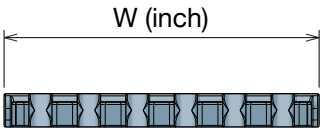

Version C - With 2 Positioner

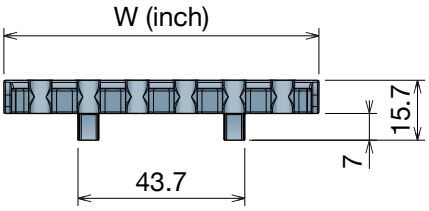

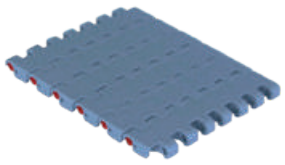

K325 - One track belt

Series	Material	Width	Version
5301	*	9325	A
5301	*	9325	C

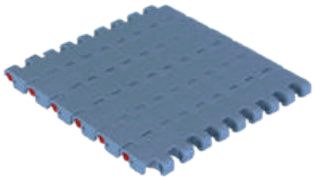

K450 - One track belt

Series	Material	Width	Version
5301	*	9450	A
5301	*	9450	C

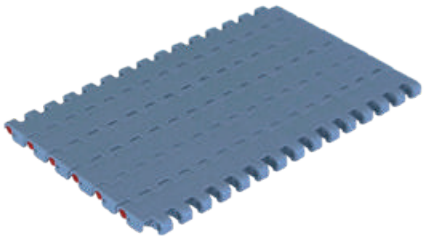

K750 - One track belt

Series	Material	Width	Version
5301	*	9750	A
5301	*	9750	C

590 FTT

Tappeto Modulare 590 FTT, H=8,7
Modular Belt Series 590 FTT, H=8,7 / Modulare Mattenkette 590 FTT, H=8,7

CODE STRUCTURE GUIDE (Example)			
5306	01	9450	C-R
Series	*Material	Width	Version

pg. 272 | pg. 516->524 | pg. 487

Backflex radius min.: 25 mm

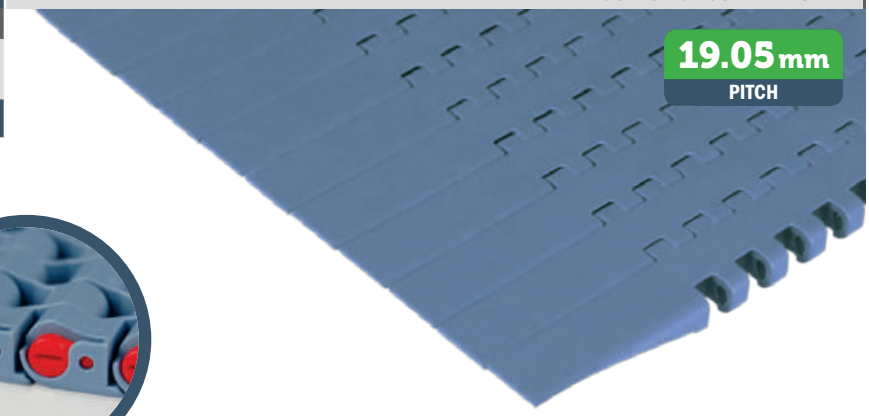

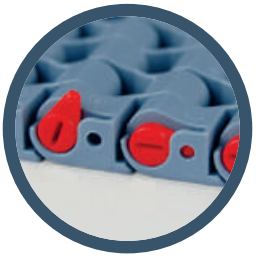

***Material**

LFA - Code 01
Low friction Acetal

Max w. load:	30000 N/m
Weight:	7,2 kg/m²
Temp. range dry:	-40÷80 °C
Temp. range wet:	-40÷65 °C
Pin material:	PBT white

MX - Code 03
Performance PBT

Max w. load:	24000 N/m
Weight:	7,0 kg/m²
Temp. range dry:	-40÷120 °C
Temp. range wet:	-40÷60 °C
Pin material:	POM grey

MPX - Code 25
Lubricated Acetal

Max w. load:	30000 N/m
Weight:	7,2 kg/m²
Temp. range dry:	-40÷80 °C
Temp. range wet:	-40÷65 °C
Pin material:	PBT white

Version 590 FTT DX

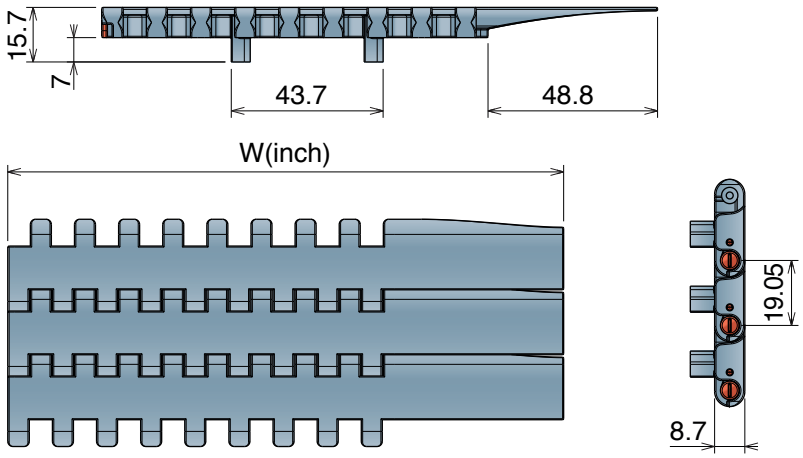

Version 590 FTT SX

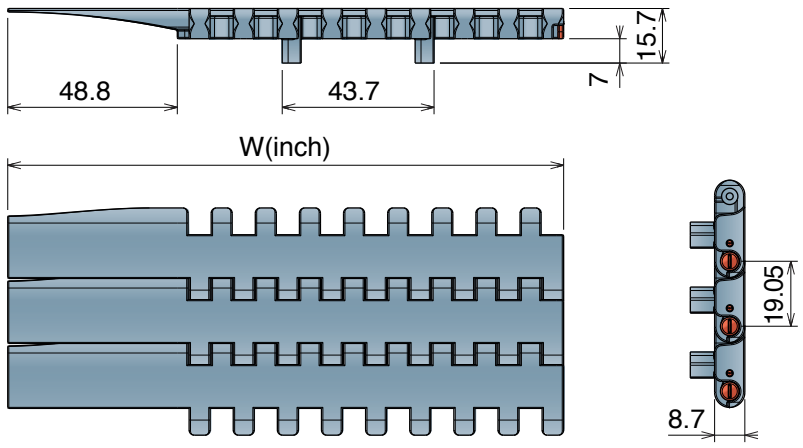

Version 590 FTT DX

Series	Material	Width	Version	Total width
5306	*	9450	C-R	160.0
5306	*	9750	C-R	236.2

Version 590 FTT SX

Series	Material	Width	Version	Total width
5306	*	9450	C-L	160.0
5306	*	9750	C-L	236.2

525

Pitch 15,0 mm
H= 8,7 mm

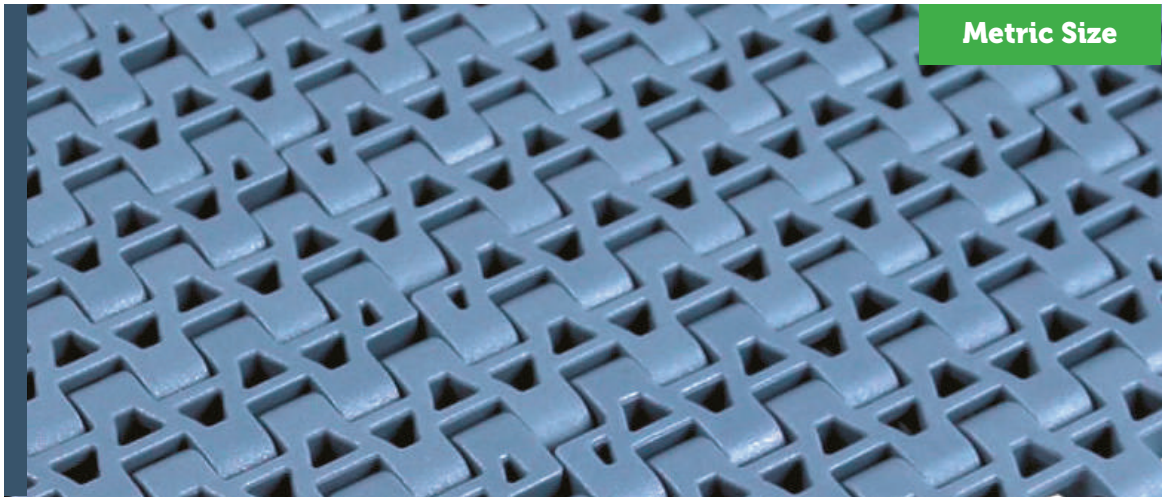

525 HD FT
525 HD FT+RIB
525 FTT
525 HD FG
525 HD GT
525 HD GT *Side Indent*

525 HD FT

Tappeto Modulare 525 HD, H=8,7 M=85

Modular Belt Series 525 HD, H=8,7 M=85 / Modulare Mattenkette 525 HD, H=8,7 M=85

CODE STRUCTURE GUIDE (Example)			
5261	03	0340	C
Series	*Material	Width	Version

pg. 271 | pg. 516->524 | pg. 488

Backflex radius min.: 25 mm

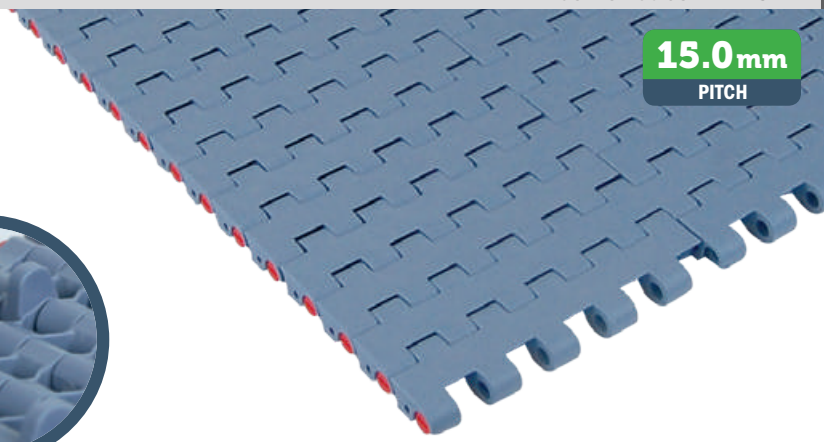

Reinforced positioner



***Material**

LFA - Code 01
Low friction Acetal

Max w. load:	25500 N/m
Weight:	9,0 kg/m²
Temp. range dry:	-40÷80 °C
Temp. range wet:	-40÷65 °C
Pin material:	PBT white

MX - Code 03
Performance PBT

Max w. load:	20500 N/m
Weight:	8,7 kg/m²
Temp. range dry:	-40÷120 °C
Temp. range wet:	-40÷60 °C
Pin material:	POM grey

PFX - Code 30
Extra performance PBT

Max w. load:	20500 N/m
Weight:	8,7 kg/m²
Temp. range dry:	-40÷120 °C
Temp. range wet:	-40÷60 °C
Pin material:	POM grey

THE BEST CHOICE FOR DRY RUNNING APPLICATIONS

Version A - Standard

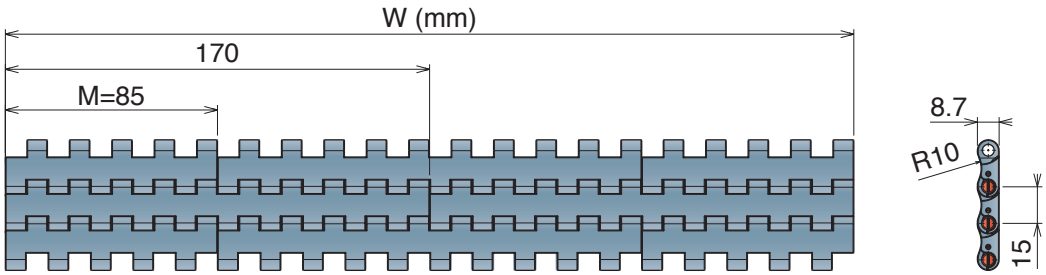

Version B - With 1 Positioner

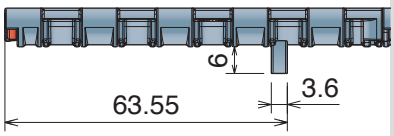

Version C - With 2 Positioner

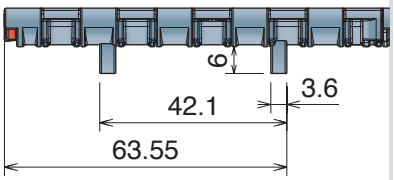

Version A - Standard

Series	Material	Width	Version
5261	*	0085	A
5261	*	0170	A
5261	*	0255	A
5261	*	0340	A
5261	*	0425	A
5261	*	0510	A
5261	*	0595	A
5261	*	0680	A
5261	*	0765	A
5261	*	0850	A
5261	*	0935	A
5261	*	1020	A
5261	*	1105	A
5261	*	1190	A
5261	*	1275	A
5261	*	1360	A
5261	*	1445	A
5261	*	1530	A

Version B - With 1 Positioner

Series	Material	Width	Version
5261	*	0085	B
5261	*	0170	B
5261	*	0255	B
5261	*	0340	B
5261	*	0425	B
5261	*	0510	B
5261	*	0595	B
5261	*	0680	B
5261	*	0765	B
5261	*	0850	B
5261	*	0935	B
5261	*	1020	B
5261	*	1105	B
5261	*	1190	B
5261	*	1275	B
5261	*	1360	B
5261	*	1445	B
5261	*	1530	B

Version C - With 2 Positioners

Series	Material	Width	Version
5261	*	0085	C
5261	*	0170	C
5261	*	0255	C
5261	*	0340	C
5261	*	0425	C
5261	*	0510	C
5261	*	0595	C
5261	*	0680	C
5261	*	0765	C
5261	*	0850	C
5261	*	0935	C
5261	*	1020	C
5261	*	1105	C
5261	*	1190	C
5261	*	1275	C
5261	*	1360	C
5261	*	1445	C
5261	*	1530	C

525 HD FT + *RIB*

Tappeto Modulare 525 HD, H=8,7 M=85

Modular Belt Series 525 HD, H=8,7 M=85 / Modulare Mattenkette 525 HD, H=8,7 M=85

CODE STRUCTURE GUIDE (Example)				
5261	01	0340	C	XR3
Series	*Material	Width	Version	RIB

pg. 271 | pg. 516->524 | pg. 488

Backflex radius min.: 25 mm

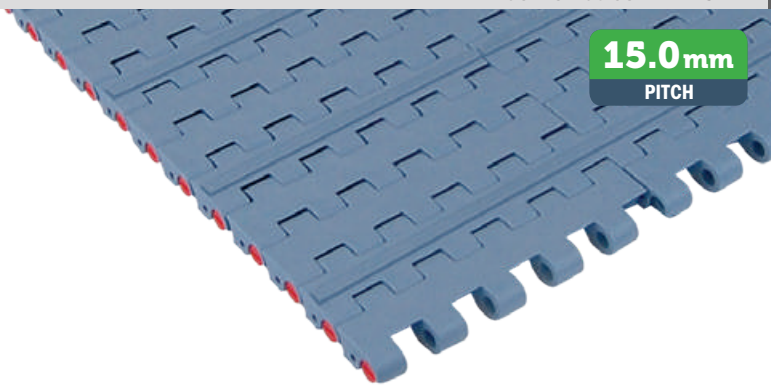

***Material**

LFA - Code 01
Low friction Acetal

Max w. load:	25500 N/m
Weight:	9,0 kg/m²
Temp. range dry:	-40÷80 °C
Temp. range wet:	-40÷65 °C
Pin material:	PBT white

MX - Code 03
Performance PBT

Max w. load:	20500 N/m
Weight:	8,7 kg/m²
Temp. range dry:	-40÷120 °C
Temp. range wet:	-40÷60 °C
Pin material:	POM grey

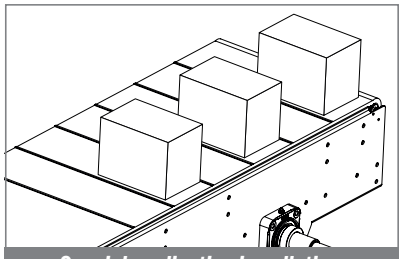

Special application in palletizer

Version A - Standard

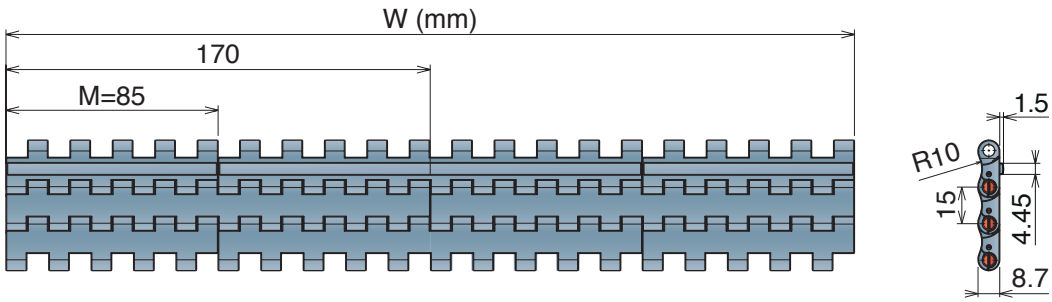

Version B - With 1 Positioner

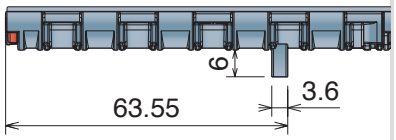

Version C - With 2 Positioner

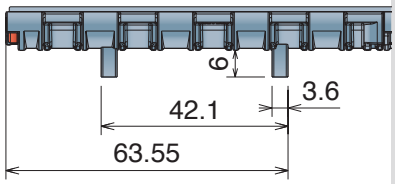

Version A - Standard

Series	Material	Width	Version	RIB
5261	*	0085	A	XR3 or XR5
5261	*	0170	A	XR3 or XR5
5261	*	0255	A	XR3 or XR5
5261	*	0340	A	XR3 or XR5
5261	*	0425	A	XR3 or XR5
5261	*	0510	A	XR3 or XR5
5261	*	0595	A	XR3 or XR5
5261	*	0680	A	XR3 or XR5
5261	*	0765	A	XR3 or XR5
5261	*	0850	A	XR3 or XR5
5261	*	0935	A	XR3 or XR5
5261	*	1020	A	XR3 or XR5
5261	*	1105	A	XR3 or XR5
5261	*	1190	A	XR3 or XR5
5261	*	1275	A	XR3 or XR5
5261	*	1360	A	XR3 or XR5
5261	*	1445	A	XR3 or XR5
5261	*	1530	A	XR3 or XR5

XR3 *(RIB every 3 links)* | **XR5** *(RIB every 5 links)*

Version B - With 1 Positioner

Series	Material	Width	Version	RIB
5261	*	0085	B	XR3 or XR5
5261	*	0170	B	XR3 or XR5
5261	*	0255	B	XR3 or XR5
5261	*	0340	B	XR3 or XR5
5261	*	0425	B	XR3 or XR5
5261	*	0510	B	XR3 or XR5
5261	*	0595	B	XR3 or XR5
5261	*	0680	B	XR3 or XR5
5261	*	0765	B	XR3 or XR5
5261	*	0850	B	XR3 or XR5
5261	*	0935	B	XR3 or XR5
5261	*	1020	B	XR3 or XR5
5261	*	1105	B	XR3 or XR5
5261	*	1190	B	XR3 or XR5
5261	*	1275	B	XR3 or XR5
5261	*	1360	B	XR3 or XR5
5261	*	1445	B	XR3 or XR5
5261	*	1530	B	XR3 or XR5

XR3 *(RIB every 3 links)* | **XR5** *(RIB every 5 links)*

Version C - With 2 Positioners

Series	Material	Width	Version	RIB
5261	*	0085	C	XR3 or XR5
5261	*	0170	C	XR3 or XR5
5261	*	0255	C	XR3 or XR5
5261	*	0340	C	XR3 or XR5
5261	*	0425	C	XR3 or XR5
5261	*	0510	C	XR3 or XR5
5261	*	0595	C	XR3 or XR5
5261	*	0680	C	XR3 or XR5
5261	*	0765	C	XR3 or XR5
5261	*	0850	C	XR3 or XR5
5261	*	0935	C	XR3 or XR5
5261	*	1020	C	XR3 or XR5
5261	*	1105	C	XR3 or XR5
5261	*	1190	C	XR3 or XR5
5261	*	1275	C	XR3 or XR5
5261	*	1360	C	XR3 or XR5
5261	*	1445	C	XR3 or XR5
5261	*	1530	C	XR3 or XR5

XR3 *(RIB every 3 links)* | **XR5** *(RIB every 5 links)*

525 FTT

Tappeto Modulare 525 FTT, H=8,7 M=85
Modular Belt Series 525 FTT, H=8,7 M=85 / Modulare Mattenkette 525 FTT, H=8,7 M=85

CODE STRUCTURE GUIDE			
(Example)			
5256	03	0085	C
Series	*Material	Width	Version

pg. 271 | pg. 516->524 | pg. 488

Backflex radius min.: 25 mm

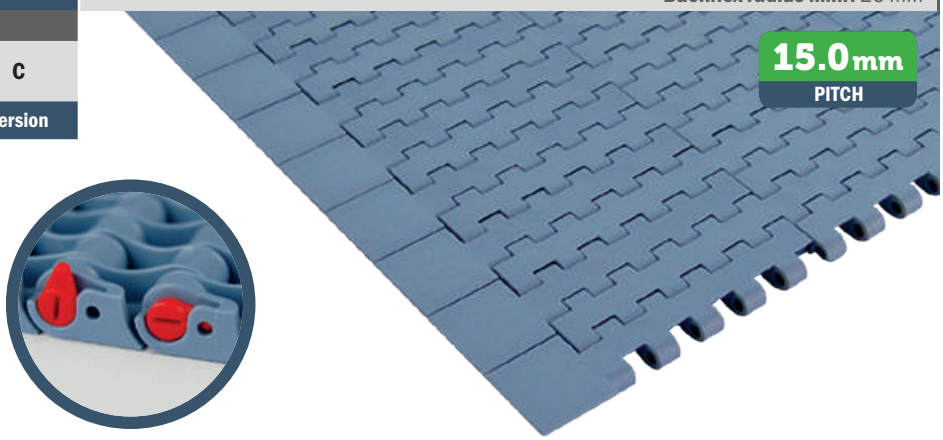

***Material**

LFA - Code 01
Low friction Acetal

Max w. load:	21500 N/m
Weight:	7,8 kg/m²
Temp. range dry:	-40÷80 °C
Temp. range wet:	-40÷65 °C
Pin material:	PBT white

MX - Code 03
Performance PBT

Max w. load:	17500 N/m
Weight:	7,5 kg/m²
Temp. range dry:	-40÷120 °C
Temp. range wet:	-40÷60 °C
Pin material:	POM grey

Version C

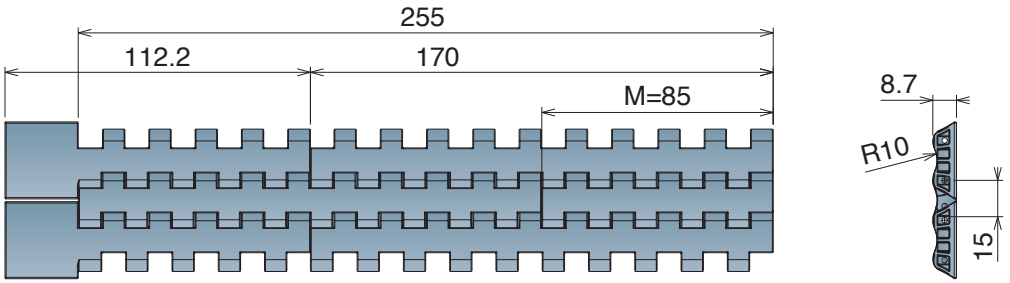

Version CN - Near



Version CO - Opposite



Version C

Series	Material	Width	Version
5256	*	0085	C

Version CN - Near

Series	Material	Width	Version
5256	*	0170	CN
5256	*	0255	CN

Version CO - Opposite

Series	Material	Width	Version
5256	*	0170	CO
5256	*	0255	CO

On request available with bigger/different width

525 HD FG Open Surface 25% Tappeto Modulare 525 HD Flush grid, H=8,7 M=85

Modular Belt Series 525 HD Flush grid, H=8,7 M=85 / Modulare Mattenkette 525 HD Flush grid, H=8,7 M=85

CODE STRUCTURE GUIDE (Example)			
5262	03	0340	C
Series	*Material	Width	Version

pg. 271 | pg. 516->524 | pg. 488

Backflex radius min.: 25 mm

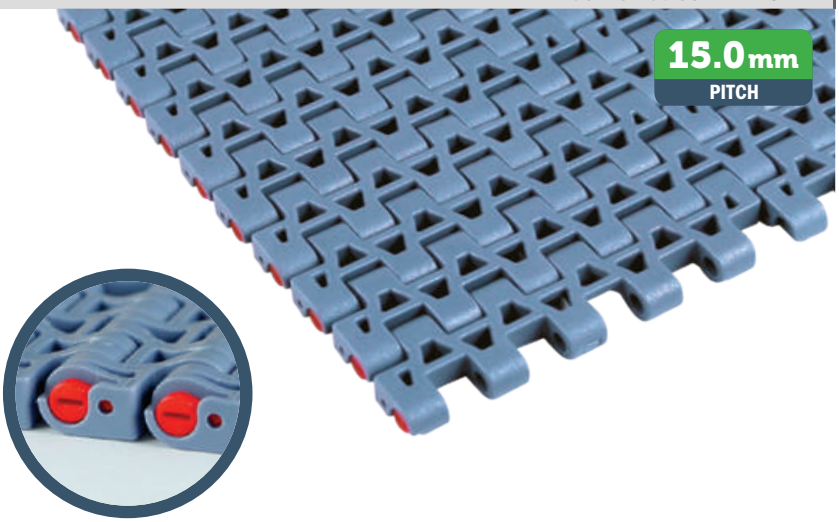

***Material**

LFA - Code 01
Low friction Acetal

Max w. load:	25500 N/m
Weight:	8,1 kg/m²
Temp. range dry:	-40÷80 °C
Temp. range wet:	-40÷65 °C
Pin material:	PBT white

MX - Code 03
Performance PBT

Max w. load:	20500 N/m
Weight:	7,8 kg/m²
Temp. range dry:	-40÷120 °C
Temp. range wet:	-40÷60 °C
Pin material:	POM grey

PFX - Code 30
Extra performance PBT

Max w. load:	20500 N/m
Weight:	7,8 kg/m²
Temp. range dry:	-40÷120 °C
Temp. range wet:	-40÷60 °C
Pin material:	POM grey

THE BEST CHOICE FOR DRY RUNNING APPLICATIONS

Version A - Standard

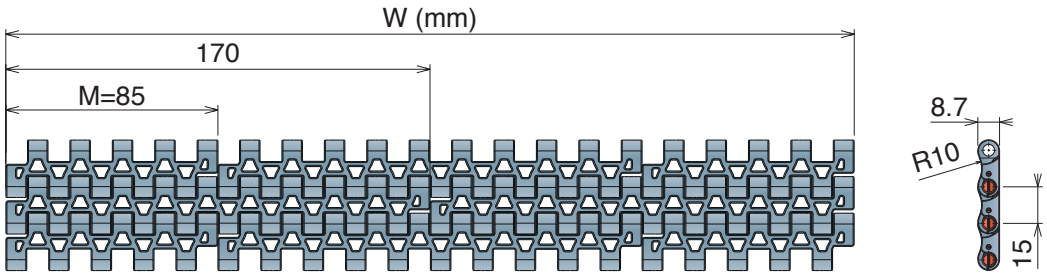

Version B - With 1 Positioner

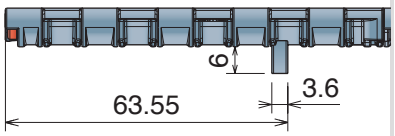

Version C - With 2 Positioner

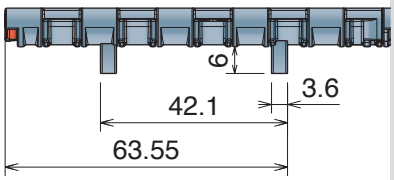

Version A - Standard

Series	Material	Width	Version
5262	*	0085	A
5262	*	0170	A
5262	*	0255	A
5262	*	0340	A
5262	*	0425	A
5262	*	0510	A
5262	*	0595	A
5262	*	0680	A
5262	*	0765	A
5262	*	0850	A
5262	*	0935	A
5262	*	1020	A
5262	*	1105	A
5262	*	1190	A
5262	*	1275	A
5262	*	1360	A
5262	*	1445	A
5262	*	1530	A

Version B - With 1 Positioner

Series	Material	Width	Version
5262	*	0085	B
5262	*	0170	B
5262	*	0255	B
5262	*	0340	B
5262	*	0425	B
5262	*	0510	B
5262	*	0595	B
5262	*	0680	B
5262	*	0765	B
5262	*	0850	B
5262	*	0935	B
5262	*	1020	B
5262	*	1105	B
5262	*	1190	B
5262	*	1275	B
5262	*	1360	B
5262	*	1445	B
5262	*	1530	B

Version C - With 2 Positioners

Series	Material	Width	Version
5262	*	0085	C
5262	*	0170	C
5262	*	0255	C
5262	*	0340	C
5262	*	0425	C
5262	*	0510	C
5262	*	0595	C
5262	*	0680	C
5262	*	0765	C
5262	*	0850	C
5262	*	0935	C
5262	*	1020	C
5262	*	1105	C
5262	*	1190	C
5262	*	1275	C
5262	*	1360	C
5262	*	1445	C
5262	*	1530	C

525 HD GT

Tappeto Modulare 525 HD GT, H=8,7 M=85

Modular Belt Series 525 HD GT, H=8,7 M=85 / Modulare Mattenkette 525 HD GT, H=8,7 M=85

CODE STRUCTURE GUIDE (Example)			
5263	03	0340	C
Series	*Material	Width	Version

pg. 271 | pg. 516->524 | pg. 488

Backflex radius min.: 25 mm

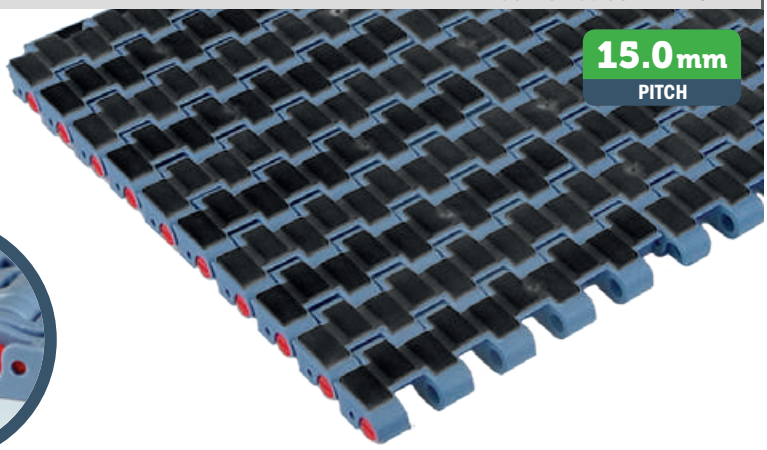



*Material

LFA - Code 01
Low friction Acetal

Max w. load:	25500 N/m
Weight:	10,35 kg/m²
Temp. range dry:	-40÷80 °C
Temp. range wet:	-40÷65 °C
Pin material:	PBT white
Hardness of Grip top Rubber:	75 ShA

PP - Code 02
Polypropylene

Max w. load:	15500 N/m
Weight:	8,7 kg/m²
Temp. range dry:	4÷80 °C
Temp. range wet:	4÷65 °C
Pin material:	PP blu
Hardness of Grip top Rubber:	75 ShA

MX - Code 03
Performance PBT

Max w. load:	20500 N/m
Weight:	10,35 kg/m²
Temp. range dry:	-40÷120 °C
Temp. range wet:	-40÷60 °C
Pin material:	POM grey
Hardness of Grip top Rubber:	75 ShA

Available also with 50 ShA Rubber

Version A - Standard

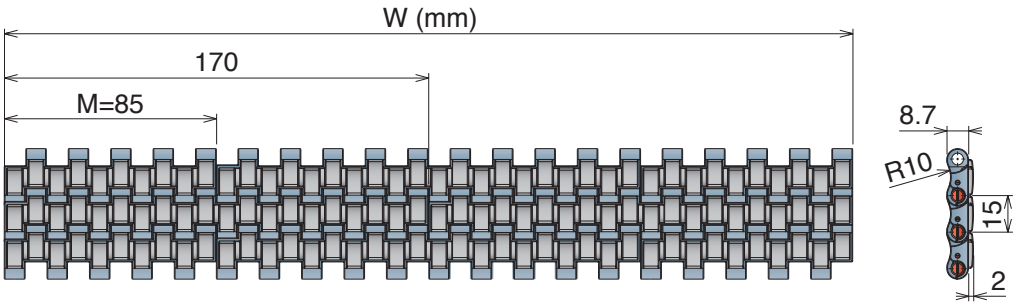

Version B - With 1 Positioner

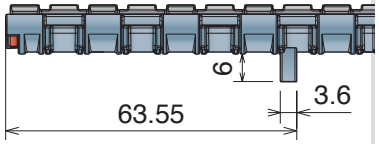

Version C - With 2 Positioner

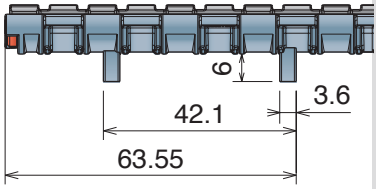

Version A - Standard

Series	Material	Width	Version
5263	*	0085	A
5263	*	0170	A
5263	*	0255	A
5263	*	0340	A
5263	*	0425	A
5263	*	0510	A
5263	*	0595	A
5263	*	0680	A
5263	*	0765	A
5263	*	0850	A
5263	*	0935	A
5263	*	1020	A
5263	*	1105	A
5263	*	1190	A
5263	*	1275	A
5263	*	1360	A
5263	*	1445	A
5263	*	1530	A

Version B - With 1 Positioner

Series	Material	Width	Version
5263	*	0085	B
5263	*	0170	B
5263	*	0255	B
5263	*	0340	B
5263	*	0425	B
5263	*	0510	B
5263	*	0595	B
5263	*	0680	B
5263	*	0765	B
5263	*	0850	B
5263	*	0935	B
5263	*	1020	B
5263	*	1105	B
5263	*	1190	B
5263	*	1275	B
5263	*	1360	B
5263	*	1445	B
5263	*	1530	B

Version C - With 2 Positioners

Series	Material	Width	Version
5263	*	0085	C
5263	*	0170	C
5263	*	0255	C
5263	*	0340	C
5263	*	0425	C
5263	*	0510	C
5263	*	0595	C
5263	*	0680	C
5263	*	0765	C
5263	*	0850	C
5263	*	0935	C
5263	*	1020	C
5263	*	1105	C
5263	*	1190	C
5263	*	1275	C
5263	*	1360	C
5263	*	1445	C
5263	*	1530	C

525 HD GT *Side Indent*

Tappeto Modulare 525 HD GT Side Indent, H=8,7 M=85

Modular Belt Series 525 HD GT Side Indent, *H=8,7 M=85 / Modulare Mattenkette 525* HD GT Side Indent, *H=8,7 M=85*

CODE STRUCTURE GUIDE (Example)			
5265	03	0340	C
Series	*Material	Width	Version

pg. 271 | pg. 516->524 | pg. 488

Backflex radius min.: 25 mm

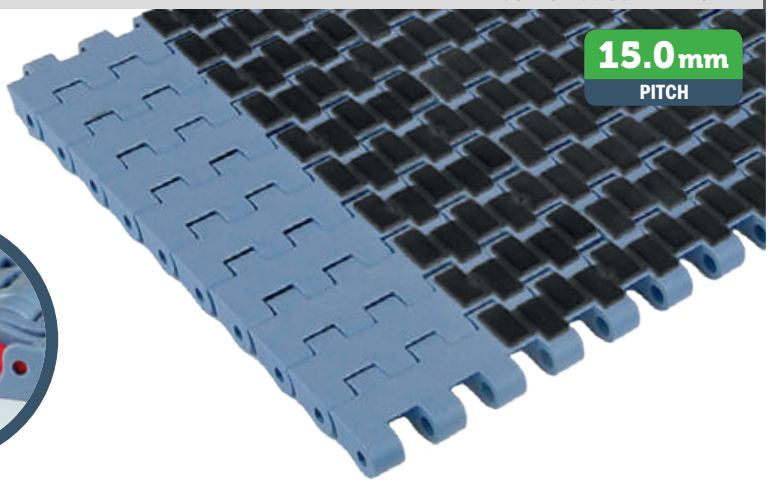



***Material**

LFA - Code 01
Low friction Acetal

Max w. load:	25500 N/m
Weight:	10,35 kg/m²
Temp. range dry:	-40÷80 °C
Temp. range wet:	-40÷65 °C
Pin material:	PBT white
Hardness of Grip top Rubber:	75 ShA

PP - Code 02
Polypropylene

Max w. load:	15500 N/m
Weight:	8,7 kg/m²
Temp. range dry:	4÷80 °C
Temp. range wet:	4÷65 °C
Pin material:	PP blu
Hardness of Grip top Rubber:	75 ShA

MX - Code 03
Performance PBT

Max w. load:	20500 N/m
Weight:	10,35 kg/m²
Temp. range dry:	-40÷120 °C
Temp. range wet:	-40÷60 °C
Pin material:	POM grey
Hardness of Grip top Rubber:	75 ShA

Available also with 50 ShA Rubber

Version A - Standard

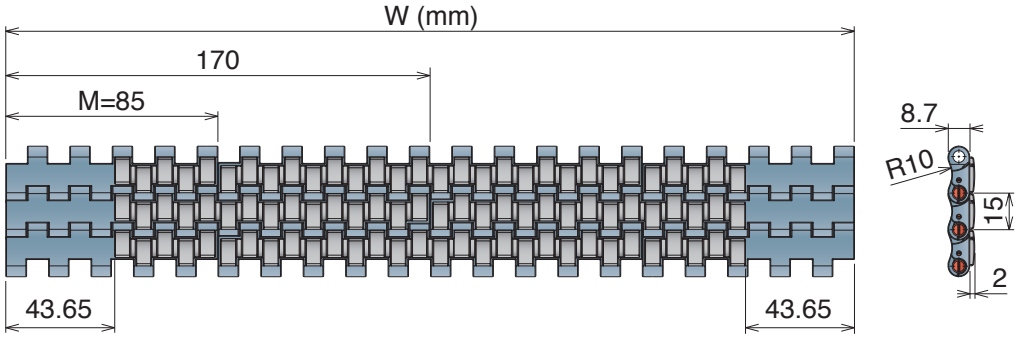

Version B - With 1 Positioner

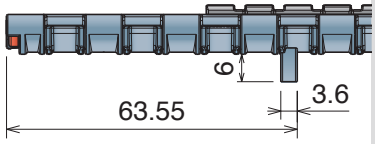

Version C - With 2 Positioner

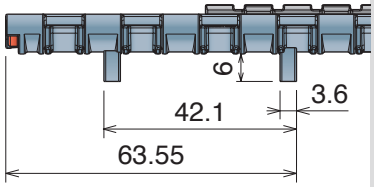

Version A - Standard

Series	Material	Width	Version
5265	*	0255	A
5265	*	0340	A
5265	*	0425	A
5265	*	0510	A
5265	*	0595	A
5265	*	0680	A
5265	*	0765	A
5265	*	0850	A
5265	*	0935	A
5265	*	1020	A
5265	*	1105	A
5265	*	1190	A
5265	*	1275	A
5265	*	1360	A
5265	*	1445	A
5265	*	1530	A

Version B - With 1 Positioner

Series	Material	Width	Version
5265	*	0255	B
5265	*	0340	B
5265	*	0425	B
5265	*	0510	B
5265	*	0595	B
5265	*	0680	B
5265	*	0765	B
5265	*	0850	B
5265	*	0935	B
5265	*	1020	B
5265	*	1105	B
5265	*	1190	B
5265	*	1275	B
5265	*	1360	B
5265	*	1445	B
5265	*	1530	B

Version C - With 2 Positioners

Series	Material	Width	Version
5265	*	0255	C
5265	*	0340	C
5265	*	0425	C
5265	*	0510	C
5265	*	0595	C
5265	*	0680	C
5265	*	0765	C
5265	*	0850	C
5265	*	0935	C
5265	*	1020	C
5265	*	1105	C
5265	*	1190	C
5265	*	1275	C
5265	*	1360	C
5265	*	1445	C
5265	*	1530	C

530

Pitch 15,0 mm
H= 8,7 mm

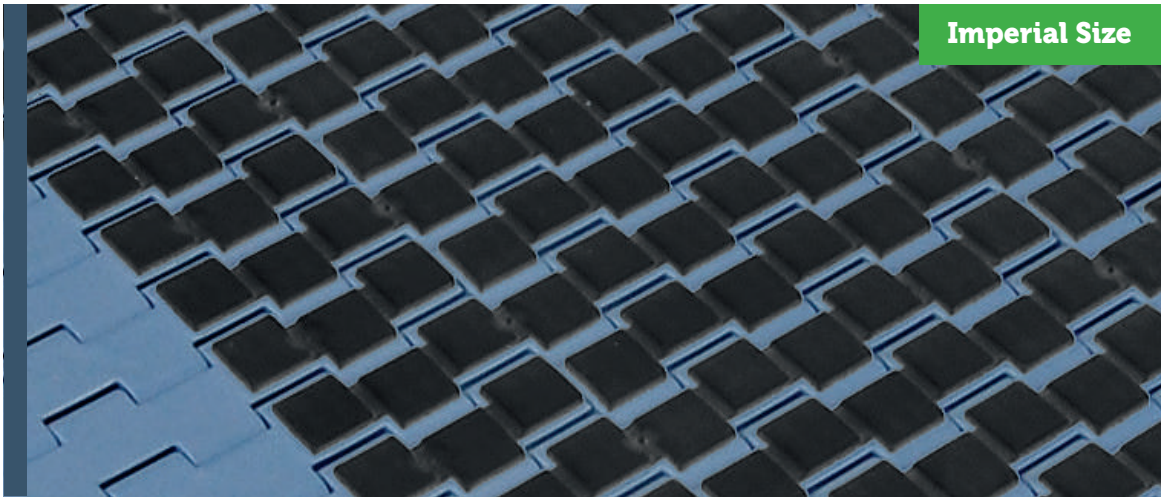

530 FT
530 FTT
530 GT
530 GT *Side indent*
530 LBP

Movex®

530 FT

Tappeto Modulare 530 FT, H=8,7 M=3”
Modular Belt Series 530 FT, H=8,7 M=3” / Modulare Mattenkette 530 FT, H=8,7 M=3”

Imperial Size

CODE STRUCTURE GUIDE (Example)			
5321	01	0030	A
Series	*Material	Width	Version

pg. 271 | pg. 516->524 | pg. 489

Backflex radius min.: 25 mm

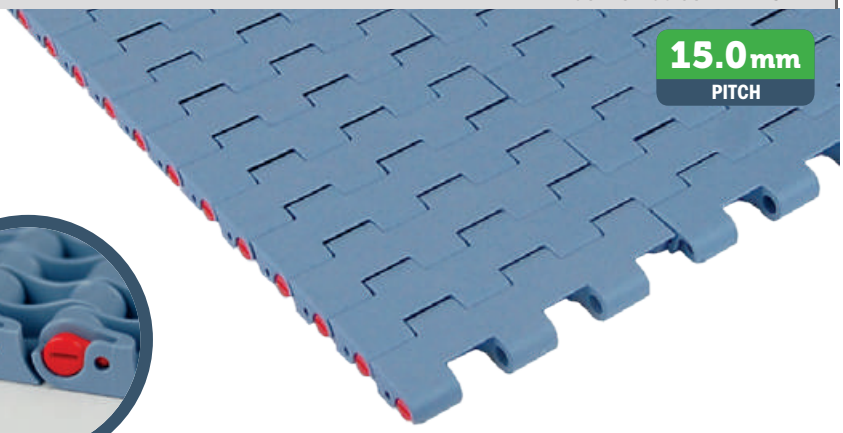

Version A - Standard

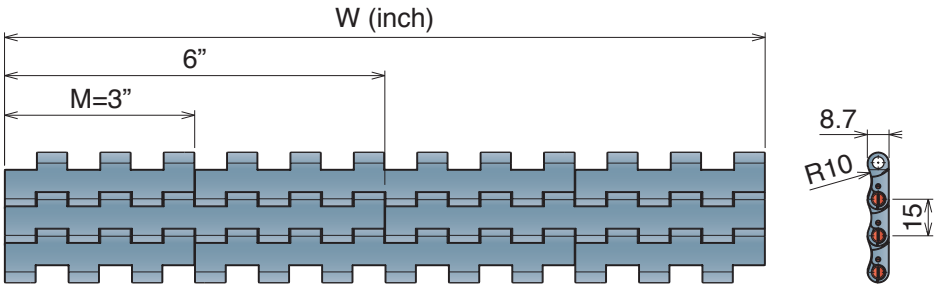

***Material**

LFA - Code 01
Low friction Acetal

Max w. load:	26000 N/m
Weight:	9,2 kg/m²
Temp. range dry:	-40÷80 °C
Temp. range wet:	-40÷65 °C
Pin material:	PBT white

MX - Code 03
Performance PBT

Max w. load:	21000 N/m
Weight:	9,0 kg/m²
Temp. range dry:	-40÷120 °C
Temp. range wet:	-40÷60 °C
Pin material:	POM grey

DKM - Code 16
Aramide Reinforced Acetal

Max w. load:	26000 N/m
Weight:	9,2 kg/m²
Temp. range dry:	-40÷80 °C
Temp. range wet:	-40÷65 °C
Pin material:	PBT white

MWX - Code 17
Polyamide Composite

Max w. load:	26000 N/m
Weight:	9,5 kg/m²
Temp. range dry:	-40÷104 °C
Temp. range wet:	NR
Pin material:	PBT white

MPX - Code 25
Lubricated Acetal

Max w. load:	26000 N/m
Weight:	9,2 kg/m²
Temp. range dry:	-40÷80 °C
Temp. range wet:	-40÷65 °C
Pin material:	PBT white

Version A - Standard

Series	Material	Width	Version
5321	*	0003	A
5321	*	0006	A
5321	*	0009	A
5321	*	0012	A
5321	*	0015	A
5321	*	0018	A
5321	*	0021	A
5321	*	0024	A
5321	*	0027	A
5321	*	0030	A
5321	*	0033	A
5321	*	0036	A
5321	*	0039	A
5321	*	0042	A
5321	*	0045	A
5321	*	0048	A
5321	*	0051	A
5321	*	0054	A

530 FTT

Tappeto Modulare 530 FTT, H=8,7 M=3”
Modular Belt Series 530 FTT, H=8,7 M=3” / Modulare Mattenkette 530 FTT, H=8,7 M=3”

CODE STRUCTURE GUIDE			
(Example)			
5326	01	0006	A
Series	*Material	Width	Version

pg. 271 | pg. 516->524 | pg. 489

Backflex radius min.: 25 mm

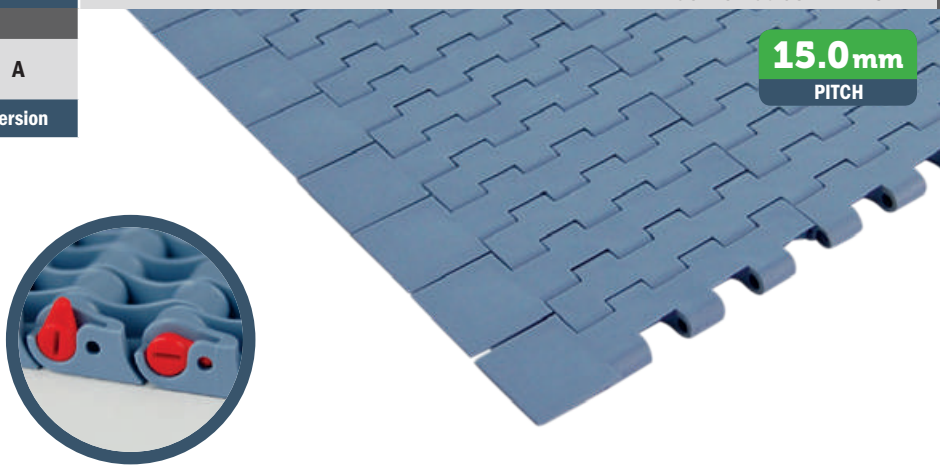

***Material**

LFA - Code 01
Low friction Acetal

Max w. load:	26000 N/m
Weight:	9,2 kg/m²
Temp. range dry:	-40÷80 °C
Temp. range wet:	-40÷65 °C
Pin material:	PBT white

MX - Code 03
Performance PBT

Max w. load:	21000 N/m
Weight:	9,0 kg/m²
Temp. range dry:	-40÷120 °C
Temp. range wet:	-40÷60 °C
Pin material:	POM grey

Version A - Standard

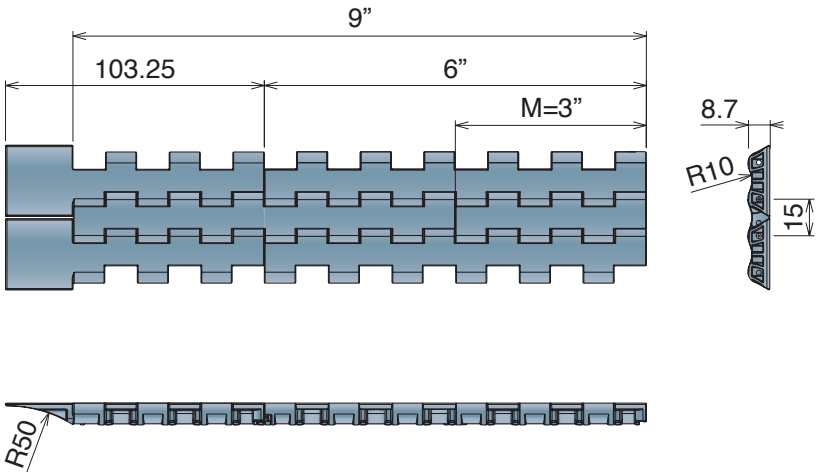

Version A - Standard

Series	Material	Width	Version
5326	*	0003	A
5326	*	0006	A
5326	*	0009	A

On request available with bigger/different width

530 GT

Tappeto Modulare 530 GT, H=8,7 M=3”
Modular Belt Series 530 GT, H=8,7 M=3” / Modulare Mattenkette 530 GT, H=8,7 M=3”

Imperial Size

CODE STRUCTURE GUIDE (Example)			
5323	01	0009	A
Series	*Material	Width	Version

pg. 271 | pg. 516->524 | pg. 489

Backflex radius min.: 30 mm

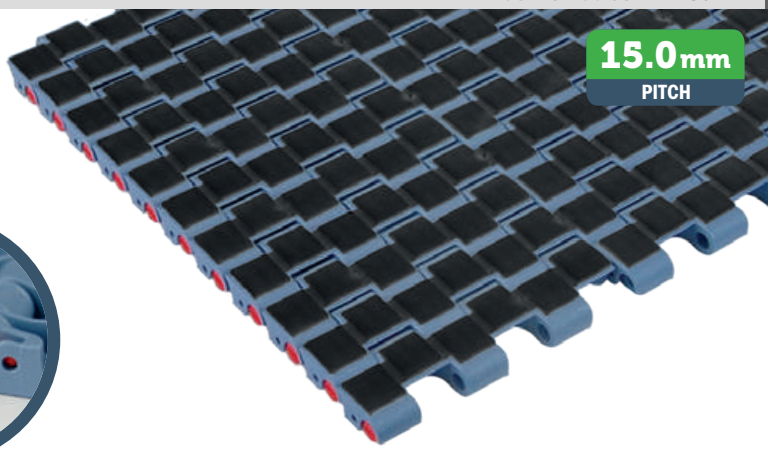



***Material**

LFA - Code 01
Low friction Acetal

Max w. load:	26000 N/m
Weight:	10,6 kg/m²
Temp. range dry:	-40÷80 °C
Temp. range wet:	-40÷65 °C
Pin material:	PBT white
Hardness of Grip top Rubber:	75 ShA

PP - Code 02
Polypropylene

Max w. load:	16000 N/m
Weight:	9,0 kg/m²
Temp. range dry:	4÷80 °C
Temp. range wet:	4÷65 °C
Pin material:	PP blu
Hardness of Grip top Rubber:	75 ShA

MX - Code 03
Performance PBT

Max w. load:	21000 N/m
Weight:	10,6 kg/m²
Temp. range dry:	-40÷120 °C
Temp. range wet:	-40÷60 °C
Pin material:	POM grey
Hardness of Grip top Rubber:	75 ShA

Available also with 50 ShA Rubber

Version A - Standard

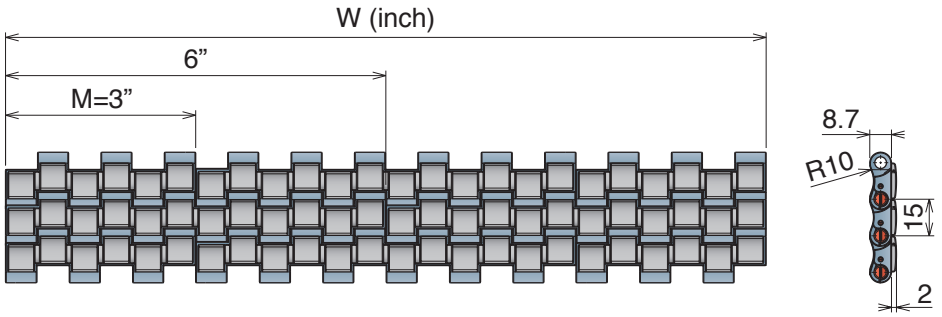

Version A - Standard

Series	Material	Width	Version
5323	*	0003	A
5323	*	0006	A
5323	*	0009	A
5323	*	0012	A
5323	*	0015	A
5323	*	0018	A
5323	*	0021	A
5323	*	0024	A
5323	*	0027	A
5323	*	0030	A
5323	*	0033	A
5323	*	0036	A
5323	*	0039	A
5323	*	0042	A
5323	*	0045	A
5323	*	0048	A
5323	*	0051	A
5323	*	0054	A

530 GT *Side indent*

Tappeto Modulare 530 GT, H=8,7 M=3”

Modular Belt Series 530 GT, H=8,7 M=3” / Modulare Mattenkette 530 GT, H=8,7 M=3”

CODE STRUCTURE GUIDE			
(Example)			
5325	01	0027	A
Series	*Material	Width	Version

pg. 271 pg. 516->524 pg. 489

Backflex radius min.: 30 mm

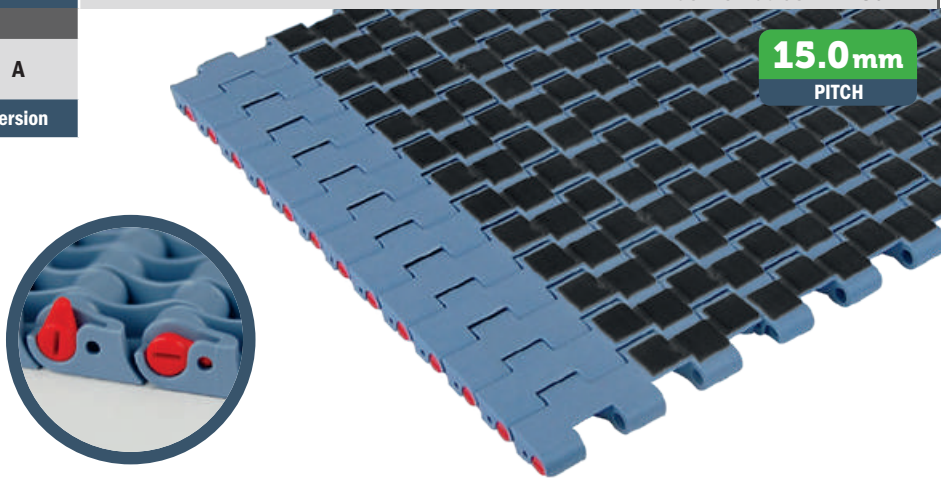

***Material**

LFA - Code 01
Low friction Acetal

Max w. load:	26000 N/m
Weight:	10,6 kg/m²
Temp. range dry:	-40÷80 °C
Temp. range wet:	-40÷65 °C
Pin material:	PBT white
Hardness of Grip top Rubber:	75 ShA

PP - Code 02
Polypropylene

Max w. load:	16000 N/m
Weight:	9,0 kg/m²
Temp. range dry:	4÷80 °C
Temp. range wet:	4÷65 °C
Pin material:	PP blu
Hardness of Grip top Rubber:	75 ShA

MX - Code 03
Performance PBT

Max w. load:	21000 N/m
Weight:	10,6 kg/m²
Temp. range dry:	-40÷120 °C
Temp. range wet:	-40÷60 °C
Pin material:	POM grey
Hardness of Grip top Rubber:	75 ShA

Available also with 50 ShA Rubber

Version A - Standard

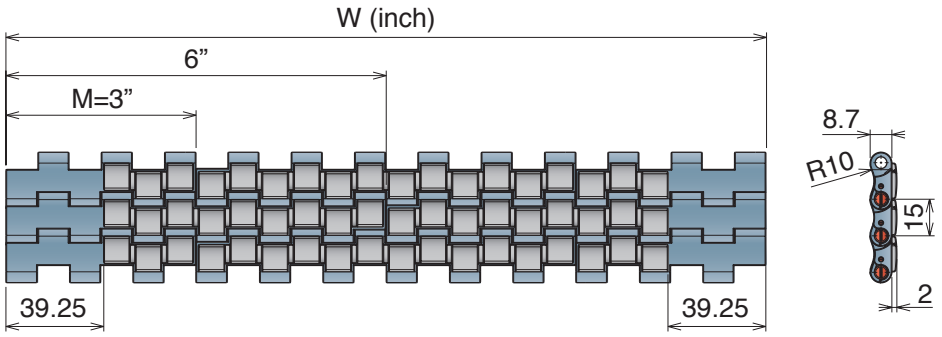

Version A - Standard

Series	Material	Width	Version
5325	*	0009	A
5325	*	0012	A
5325	*	0015	A
5325	*	0018	A
5325	*	0021	A
5325	*	0024	A
5325	*	0027	A
5325	*	0030	A
5325	*	0033	A
5325	*	0036	A
5325	*	0039	A
5325	*	0042	A
5325	*	0045	A
5325	*	0048	A
5325	*	0051	A
5325	*	0054	A

530 LBP

Tappeto Modulare 530 LBP, H=8,7 M=3"
Modular Belt Series 530 LBP, H=8,7 M=3" / Modulare Mattenkette 530 LBP, H=8,7 M=3"

Imperial Size

CODE STRUCTURE GUIDE (Example)			
5324	01	0012	A
Series	*Material	Width	Version

pg. 271 | pg. 516->524 | pg. 489

Backflex radius min.: 25 mm

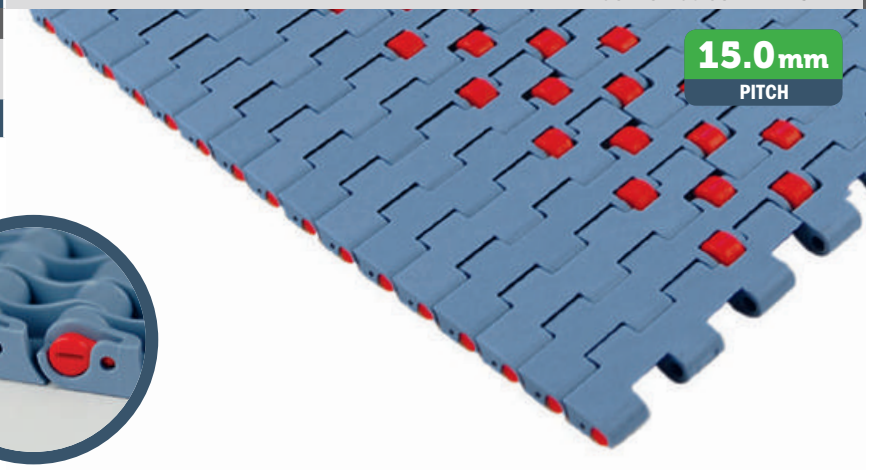

***Material**

LFA - Code 01
Low friction Acetal

Max w. load:	24000 N/m
Weight:	8,7 kg/m²
Temp. range dry:	-40÷80 °C
Temp. range dry:	-40÷65 °C
Pin material:	PBT white

Roller

Material:	POM Red
Density:	700 rollers/m²

Version A - Standard

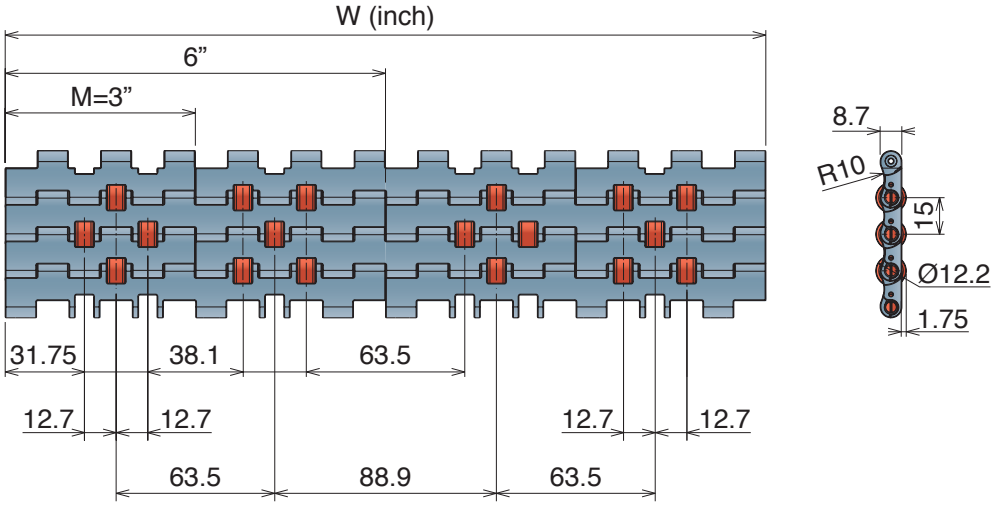

Version A - Standard

Series	Material	Width	Version
5324	*	0006	A
5324	*	0012	A
5324	*	0018	A
5324	*	0024	A
5324	*	0030	A
5324	*	0036	A
5324	*	0042	A
5324	*	0048	A
5324	*	0054	A

***Guide position for accumulation system** - Example*

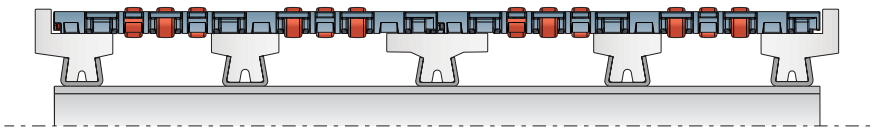

***Guide position for driven rollers, for alignment/distribution system** - Example*

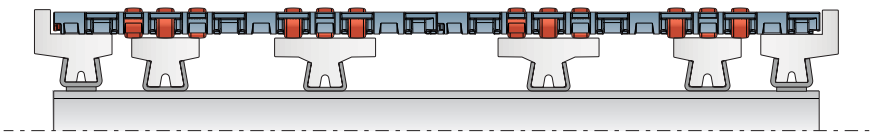

Advantages:

- ▸ Less Noise
- ▸ Less energy consuption
- ▸ Head Drive
- ▸ Center Drive
- ▸ Short Transfer

550

Pitch 25,4 mm
H= 8,7 mm

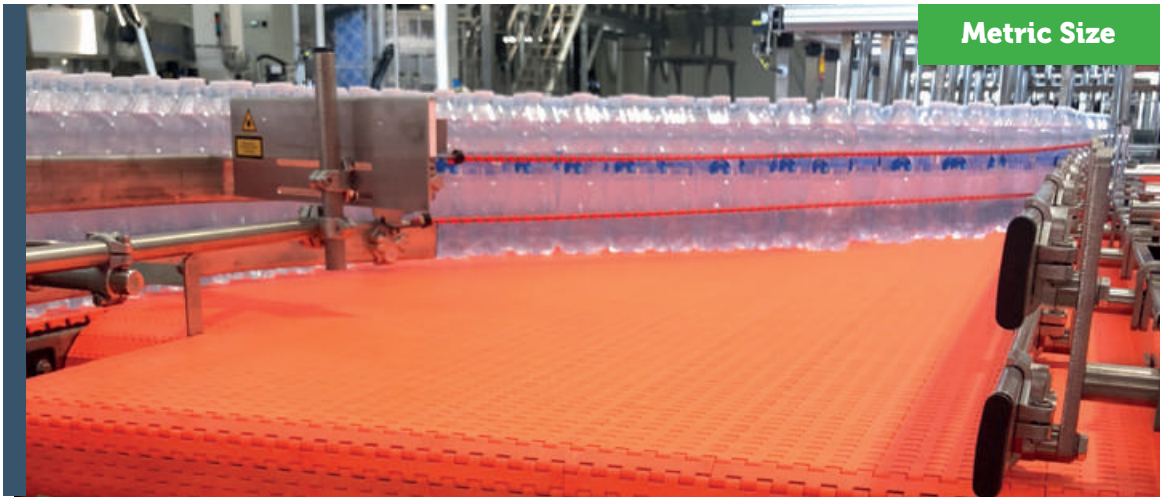

- 550 FT
- 550 FT *One track Belt*
- 550 FTT
- 550 FG
- 550 FG *One track Belt*
- 550 GT
- 550 GT *Side indent*
- 550 PRO FT
- 550 PRO M

Movex®

550 FT

Tappeto Modulare 550 FT, H=8,7 M=85
Modular Belt Series 550 FT, H=8,7 M=85 / Modulare Mattenkette 550 FT, H=8,7 M=85

CODE STRUCTURE GUIDE (Example)			
5221	01	0255	A
Series	*Material	Width	Version

pg. 273-274 | pg. 516->524 | pg. 490

Backflex radius min.: 25 mm

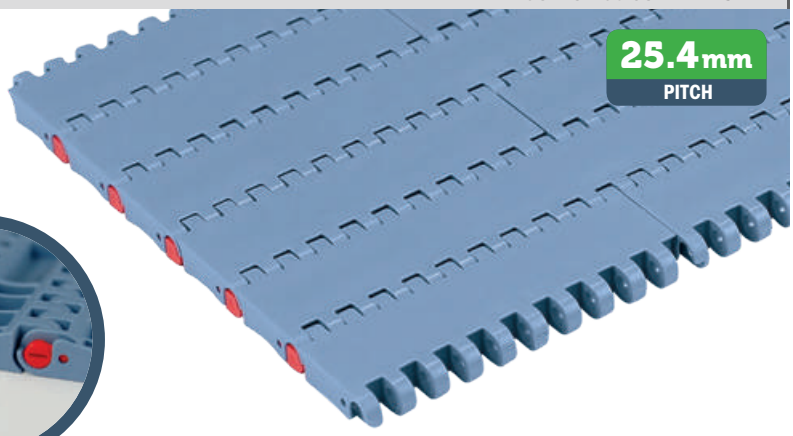



*Material

LFA - Code 01
Low friction Acetal

Max w. load:	27500 N/m
Weight:	8,5 kg/m²
Temp. range dry:	-40÷80 °C
Temp. range wet:	-40÷65 °C
Pin material:	PBT white

PP - Code 02
Polypropylene

Max w. load:	16500 N/m
Weight:	8,4 kg/m²
Temp. range dry:	4÷80 °C
Temp. range wet:	4÷65 °C
Pin material:	PP blu

MX - Code 03
Performance PBT

Max w. load:	22000 N/m
Weight:	8,2 kg/m²
Temp. range dry:	-40÷120 °C
Temp. range wet:	-40÷60 °C
Pin material:	POM grey

DKM - Code 16
Aramide Reinforced Acetal

Max w. load:	27500 N/m
Weight:	8,5 kg/m²
Temp. range dry:	-40÷80 °C
Temp. range wet:	-40÷65 °C
Pin material:	PBT white

MWX - Code 17
Polyamide Composite

Max w. load:	27500 N/m
Weight:	8,9 kg/m²
Temp. range dry:	-40÷104 °C
Temp. range wet:	NR
Pin material:	PBT white

PFX - Code 30
Extra performance PBT

Max w. load:	22000 N/m
Weight:	8,2 kg/m²
Temp. range dry:	-40÷120 °C
Temp. range wet:	-40÷60 °C
Pin material:	POM grey

THE BEST CHOICE FOR DRY RUNNING APPLICATIONS

Version A - Standard

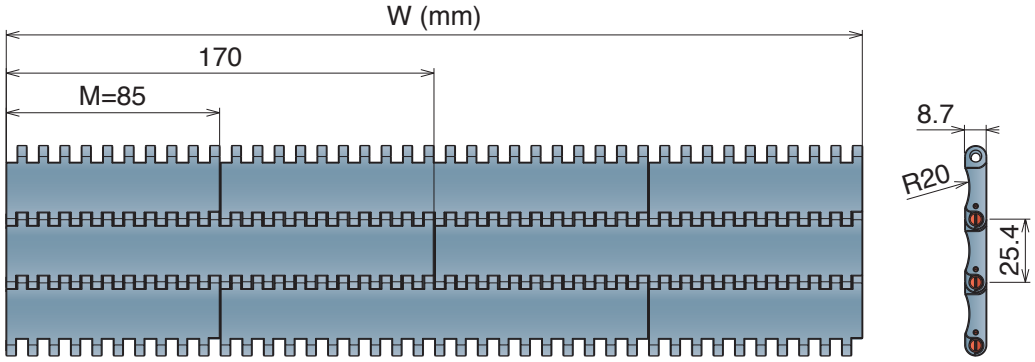

Version B - With 1 Positioner

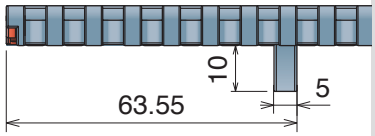

Version C - With 2 Positioner

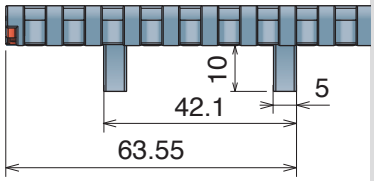

Version A - Standard

Series	Material	Width	Version
5221	*	0085	A
5221	*	0170	A
5221	*	0255	A
5221	*	0340	A
5221	*	0425	A
5221	*	0510	A
5221	*	0595	A
5221	*	0680	A
5221	*	0765	A
5221	*	0850	A
5221	*	0935	A
5221	*	1020	A
5221	*	1105	A
5221	*	1190	A
5221	*	1275	A
5221	*	1360	A
5221	*	1445	A
5221	*	1530	A

Version B - With 1 Positioner

Series	Material	Width	Version
5221	*	0085	B
5221	*	0170	B
5221	*	0255	B
5221	*	0340	B
5221	*	0425	B
5221	*	0510	B
5221	*	0595	B
5221	*	0680	B
5221	*	0765	B
5221	*	0850	B
5221	*	0935	B
5221	*	1020	B
5221	*	1105	B
5221	*	1190	B
5221	*	1275	B
5221	*	1360	B
5221	*	1445	B
5221	*	1530	B

Version C - With 2 Positioners

Series	Material	Width	Version
5221	*	0085	C
5221	*	0170	C
5221	*	0255	C
5221	*	0340	C
5221	*	0425	C
5221	*	0510	C
5221	*	0595	C
5221	*	0680	C
5221	*	0765	C
5221	*	0850	C
5221	*	0935	C
5221	*	1020	C
5221	*	1105	C
5221	*	1190	C
5221	*	1275	C
5221	*	1360	C
5221	*	1445	C
5221	*	1530	C

550 FT *One track Belt* Tappeto Modulare 550 FT, H=8,7 K330

Modular Belt Series 550 FT, H=8,7 K330 / Modulare Mattenkette 550 FT, H=8,7 K330

CODE STRUCTURE GUIDE (Example)			
5221	03	9330	A
Series	*Material	Width	Version

pg. 273-274 pg. 516->524

Backflex radius min.: 25 mm

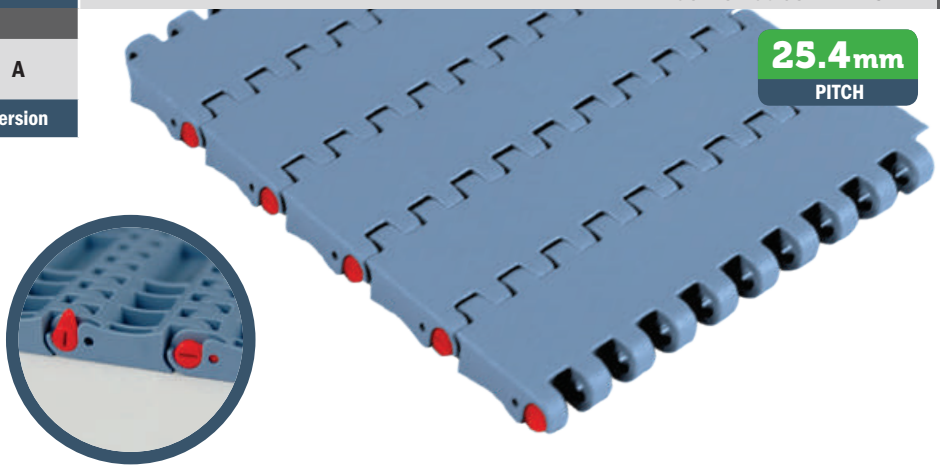

*Material

LFA - Code 01
Low friction Acetal

Max w. load:	27500 N/m
Weight:	8,5 kg/m²
Temp. range dry:	-40÷80 °C
Temp. range wet:	-40÷65 °C
Pin material:	PBT white

PP - Code 02
Polypropylene

Max w. load:	16500 N/m
Weight:	8,4 kg/m²
Temp. range dry:	4÷80 °C
Temp. range wet:	4÷65 °C
Pin material:	PP blu

MX - Code 03
Performance PBT

Max w. load:	22000 N/m
Weight:	8,2 kg/m²
Temp. range dry:	-40÷120 °C
Temp. range wet:	-40÷60 °C
Pin material:	POM grey

DKM - Code 16
Aramide Reinforced Acetal

Max w. load:	27500 N/m
Weight:	8,5 kg/m²
Temp. range dry:	-40÷80 °C
Temp. range wet:	-40÷65 °C
Pin material:	PBT white

MWX - Code 17
Polyamide Composite

Max w. load:	27500 N/m
Weight:	8,9 kg/m²
Temp. range dry:	-40÷104 °C
Temp. range wet:	NR
Pin material:	PBT white

PFX - Code 30
Extra performance PBT

Max w. load:	22000 N/m
Weight:	8,2 kg/m²
Temp. range dry:	-40÷120 °C
Temp. range wet:	-40÷60 °C
Pin material:	POM grey

THE BEST CHOICE FOR DRY RUNNING APPLICATIONS

Version A - Standard

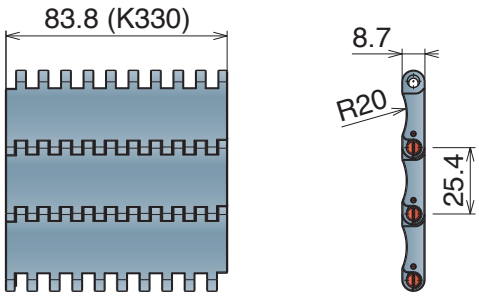

Version C - With 2 Positioner

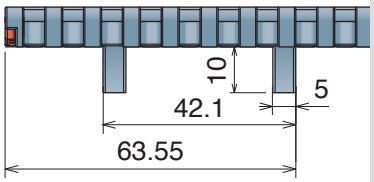

Version A - Standard

Series	Material	Width	Version
5221	*	9330	A

Version C - With 2 Positioners

Series	Material	Width	Version
5221	*	9330	C

550 FTT

Tappeto Modulare 550 FTT, H=8,7 M=85
Modular Belt Series 550 FTT, H=8,7 M=85 / Modulare Mattenkette 550 FTT, H=8,7 M=85

Metric Size

CODE STRUCTURE GUIDE (Example)			
5226	03	0255	CN
Series	*Material	Width	Version

pg. 273-274 | pg. 516->524 | pg. 490

Backflex radius min.: 25 mm



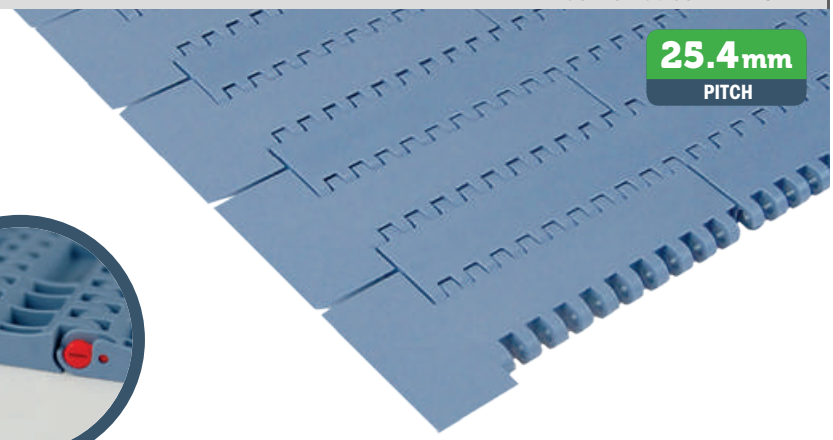

***Material**

LFA - Code 01
Low friction Acetal

Max w. load:	27500 N/m
Weight:	8,5 kg/m²
Temp. range dry:	-40÷80 °C
Temp. range wet:	-40÷65 °C
Pin material:	PBT white

MX - Code 03
Performance PBT

Max w. load:	22000 N/m
Weight:	8,2 kg/m²
Temp. range dry:	-40÷120 °C
Temp. range wet:	-40÷60 °C
Pin material:	POM grey

Version C

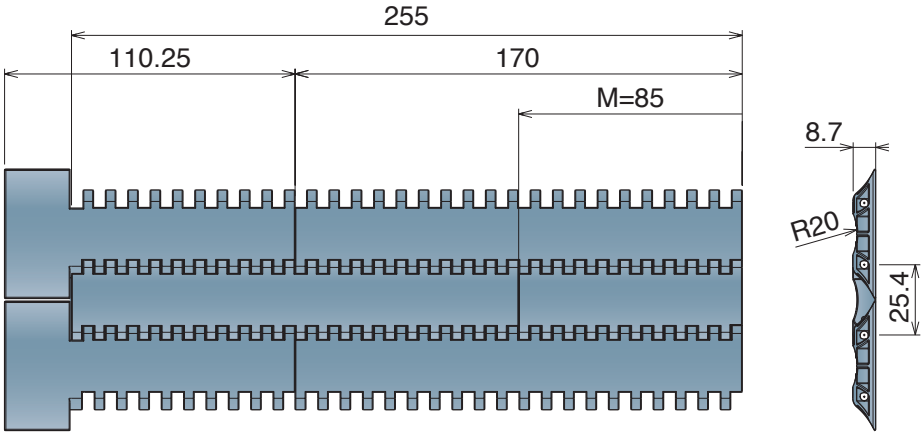

Version CN - Near

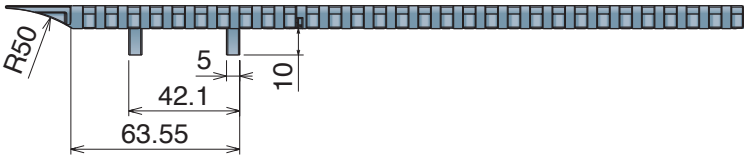

Version CO - Opposite

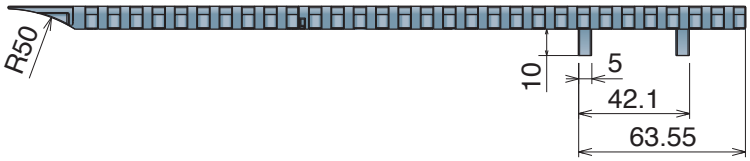

Version C

Series	Material	Width	Version
5226	*	0085	C

Version CN - Near

Series	Material	Width	Version
5226	*	0170	CN
5226	*	0255	CN

Version CO - Opposite

Series	Material	Width	Version
5226	*	0170	CO
5226	*	0255	CO

On request available with bigger/different width

550 FG Open Surface 25% Tappeto Modulare 550 FG, H=8,7 M=85

Modular Belt Series 550 FG, H=8,7 M=85 / Modulare Mattenkette 550 FG, H=8,7 M=85

CODE STRUCTURE GUIDE (Example)			
5222	01	0850	C
Series	*Material	Width	Version

pg. 273-274 | pg. 516->524 | pg. 490

Backflex radius min.: 25 mm

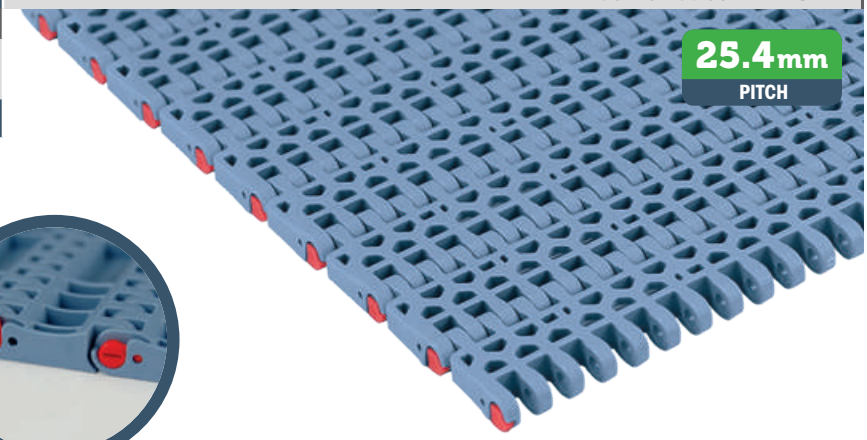

*Material

LFA - Code 01
Low friction Acetal

Max w. load:	27500 N/m
Weight:	7,0 kg/m²
Temp. range dry:	-40÷80 °C
Temp. range wet:	-40÷65 °C
Pin material:	PBT white

MX - Code 03
Performance PBT

Max w. load:	22000 N/m
Weight:	6,7 kg/m²
Temp. range dry:	-40÷120 °C
Temp. range wet:	-40÷60 °C
Pin material:	POM grey

PFX - Code 30
Extra performance PBT

Max w. load:	22000 N/m
Weight:	6,7 kg/m²
Temp. range dry:	-40÷120 °C
Temp. range wet:	-40÷60 °C
Pin material:	POM grey

THE BEST CHOICE FOR DRY RUNNING APPLICATIONS

Version A - Standard

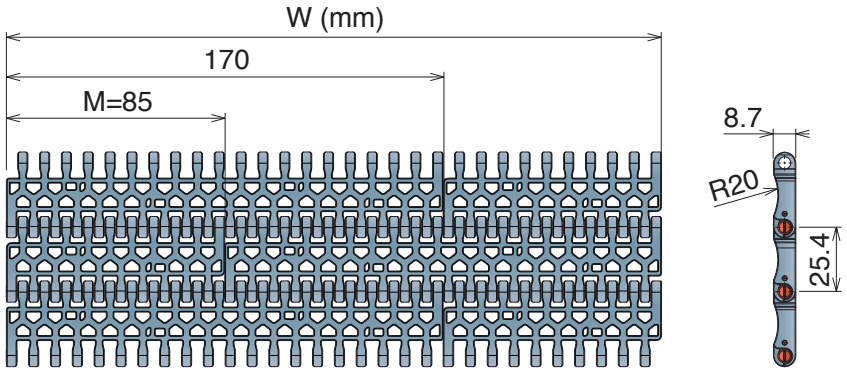

Version B - With 1 Positioner

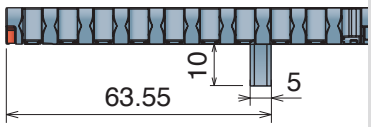

Version C - With 2 Positioner

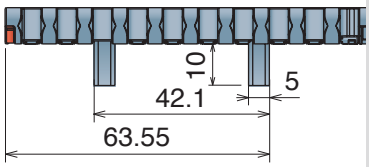

Version A - Standard

Series	Material	Width	Version
5222	*	0085	A
5222	*	0170	A
5222	*	0255	A
5222	*	0340	A
5222	*	0425	A
5222	*	0510	A
5222	*	0595	A
5222	*	0680	A
5222	*	0765	A
5222	*	0850	A
5222	*	0935	A
5222	*	1020	A
5222	*	1105	A
5222	*	1190	A
5222	*	1275	A
5222	*	1360	A
5222	*	1445	A
5222	*	1530	A

Version B - With 1 Positioner

Series	Material	Width	Version
5222	*	0085	B
5222	*	0170	B
5222	*	0255	B
5222	*	0340	B
5222	*	0425	B
5222	*	0510	B
5222	*	0595	B
5222	*	0680	B
5222	*	0765	B
5222	*	0850	B
5222	*	0935	B
5222	*	1020	B
5222	*	1105	B
5222	*	1190	B
5222	*	1275	B
5222	*	1360	B
5222	*	1445	B
5222	*	1530	B

Version C - With 2 Positioners

Series	Material	Width	Version
5222	*	0085	C
5222	*	0170	C
5222	*	0255	C
5222	*	0340	C
5222	*	0425	C
5222	*	0510	C
5222	*	0595	C
5222	*	0680	C
5222	*	0765	C
5222	*	0850	C
5222	*	0935	C
5222	*	1020	C
5222	*	1105	C
5222	*	1190	C
5222	*	1275	C
5222	*	1360	C
5222	*	1445	C
5222	*	1530	C

550 FG *One track Belt* Open Surface 25% Tappeto Modulare 550 FG, H=8,7 K330

Modular Belt Series 550 FG, H=8,7 K330 / Modulare Mattenkette 550 FG, H=8,7 K330

CODE STRUCTURE GUIDE (Example)			
5222	01	9330	A
Series	*Material	Width	Version

pg. 273-274 pg. 516->524

Backflex radius min.: 25 mm

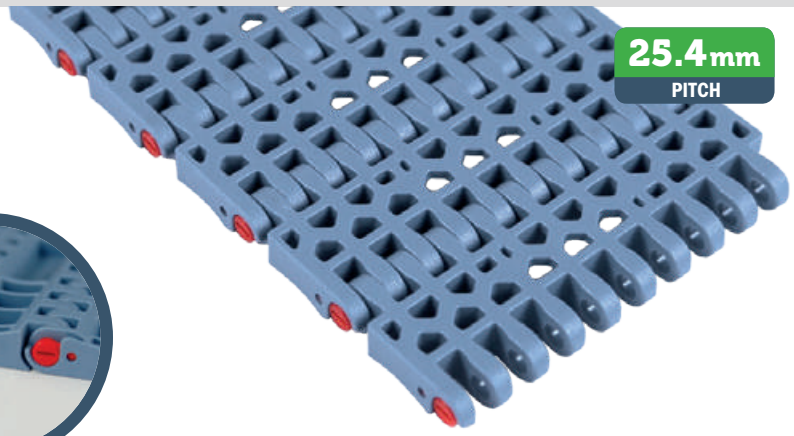



*Material

LFA - Code 01
Low friction Acetal

Max w. load:	27500 N/m
Weight:	7,0 kg/m²
Temp. range dry:	-40÷80 °C
Temp. range wet:	-40÷65 °C
Pin material:	PBT white

MX - Code 03
Performance PBT

Max w. load:	22000 N/m
Weight:	6,7 kg/m²
Temp. range dry:	-40÷120 °C
Temp. range wet:	-40÷60 °C
Pin material:	POM grey

PFX - Code 30
Extra performance PBT

Max w. load:	22000 N/m
Weight:	6,7 kg/m²
Temp. range dry:	-40÷120 °C
Temp. range wet:	-40÷60 °C
Pin material:	POM grey

THE BEST CHOICE FOR DRY RUNNING APPLICATIONS

Version A - Standard

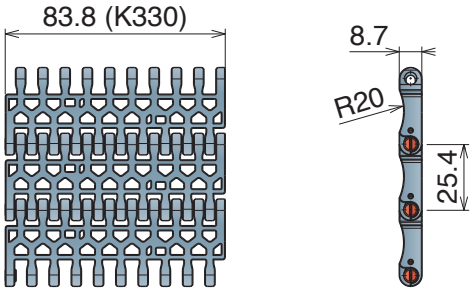

Version C - With 2 Positioner

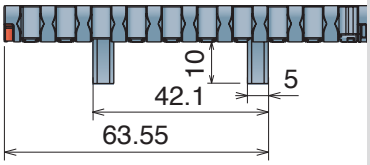

Version A - Standard

Series	Material	Width	Version
5222	*	9330	A

Version C - With 2 Positioners

Series	Material	Width	Version
5222	*	9330	C

550 GT

Tappeto Modulare 550 GT, H=8,7 M=85
Modular Belt Series 550 GT, H=8,7 M=85 / Modulare Mattenkette 550 GT, H=8,7 M=85

CODE STRUCTURE GUIDE (Example)			
5223	02	1020	A
Series	*Material	Width	Version

pg. 273-274 | pg. 516->524 | pg. 490

Backflex radius min.: 30 mm

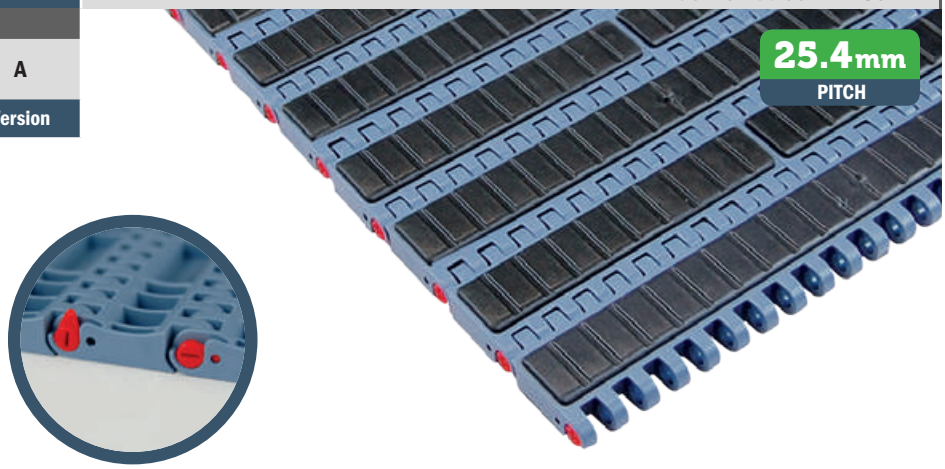

*Material

LFA - Code 01
Low friction Acetal

Max w. load:	27500 N/m
Weight:	10,1 kg/m²
Temp. range dry:	-40÷80 °C
Temp. range wet:	-40÷65 °C
Pin material:	PBT white
Hardness of Grip top Rubber:	75 ShA

PP - Code 02
Polypropylene

Max w. load:	16500 N/m
Weight:	8,4 kg/m²
Temp. range dry:	4÷80 °C
Temp. range wet:	4÷65 °C
Pin material:	PP blu
Hardness of Grip top Rubber:	75 ShA

MX - Code 03
Performance PBT

Max w. load:	21500 N/m
Weight:	10,5 kg/m²
Temp. range dry:	-40÷120 °C
Temp. range wet:	-40÷60 °C
Pin material:	POM grey
Hardness of Grip top Rubber:	75 ShA

Available also with 50 ShA Rubber

Version A - Standard

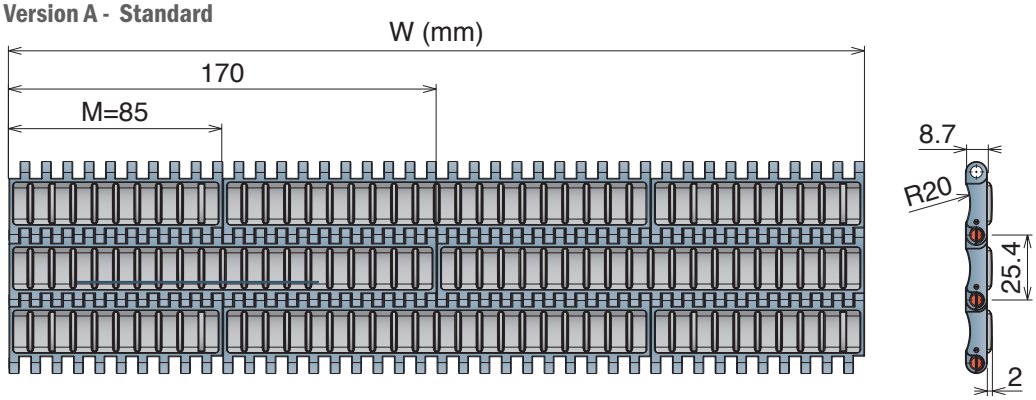

Version B - With 1 Positioner

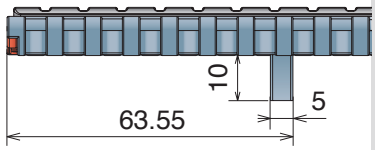

Version C - With 2 Positioner

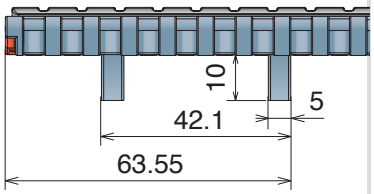

Version A - Standard

Series	Material	Width	Version
5223	*	0085	A
5223	*	0170	A
5223	*	0255	A
5223	*	0340	A
5223	*	0425	A
5223	*	0510	A
5223	*	0595	A
5223	*	0680	A
5223	*	0765	A
5223	*	0850	A
5223	*	0935	A
5223	*	1020	A
5223	*	1105	A
5223	*	1190	A
5223	*	1275	A
5223	*	1360	A
5223	*	1445	A
5223	*	1530	A

Version B - With 1 Positioner

Series	Material	Width	Version
5223	*	0085	B
5223	*	0170	B
5223	*	0255	B
5223	*	0340	B
5223	*	0425	B
5223	*	0510	B
5223	*	0595	B
5223	*	0680	B
5223	*	0765	B
5223	*	0850	B
5223	*	0935	B
5223	*	1020	B
5223	*	1105	B
5223	*	1190	B
5223	*	1275	B
5223	*	1360	B
5223	*	1445	B
5223	*	1530	B

Version C - With 2 Positioners

Series	Material	Width	Version
5223	*	0085	C
5223	*	0170	C
5223	*	0255	C
5223	*	0340	C
5223	*	0425	C
5223	*	0510	C
5223	*	0595	C
5223	*	0680	C
5223	*	0765	C
5223	*	0850	C
5223	*	0935	C
5223	*	1020	C
5223	*	1105	C
5223	*	1190	C
5223	*	1275	C
5223	*	1360	C
5223	*	1445	C
5223	*	1530	C

550 GT *Side indent* Tappeto Modulare 550 GT, H=8,7 M=85

Modular Belt Series 550 GT, H=8,7 M=85 / Modulare Mattenkette 550 GT, H=8,7 M=85

Metric Size

CODE STRUCTURE GUIDE (Example)			
5225	02	0595	B
Series	*Material	Width	Version

pg. 273-274 | pg. 516->524 | pg. 490

Backflex radius min.: 30 mm



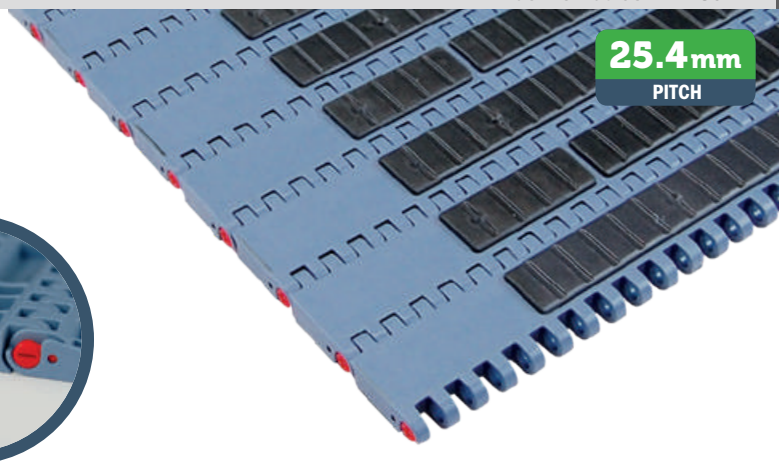

*Material

LFA - Code 01
Low friction Acetal

Max w. load:	27500 N/m
Weight:	10,1 kg/m²
Temp. range dry:	-40÷80 °C
Temp. range wet:	-40÷65 °C
Pin material:	PBT white
Hardness of Grip top Rubber:	75 ShA

PP - Code 02
Polypropylene

Max w. load:	16500 N/m
Weight:	8,4 kg/m²
Temp. range dry:	4÷80 °C
Temp. range wet:	4÷65 °C
Pin material:	PP blu
Hardness of Grip top Rubber:	75 ShA

MX - Code 03
Performance PBT

Max w. load:	21500 N/m
Weight:	10,5 kg/m²
Temp. range dry:	-40÷120 °C
Temp. range wet:	-40÷60 °C
Pin material:	POM grey
Hardness of Grip top Rubber:	75 ShA

Available also with 50 ShA Rubber

Version A - Standard

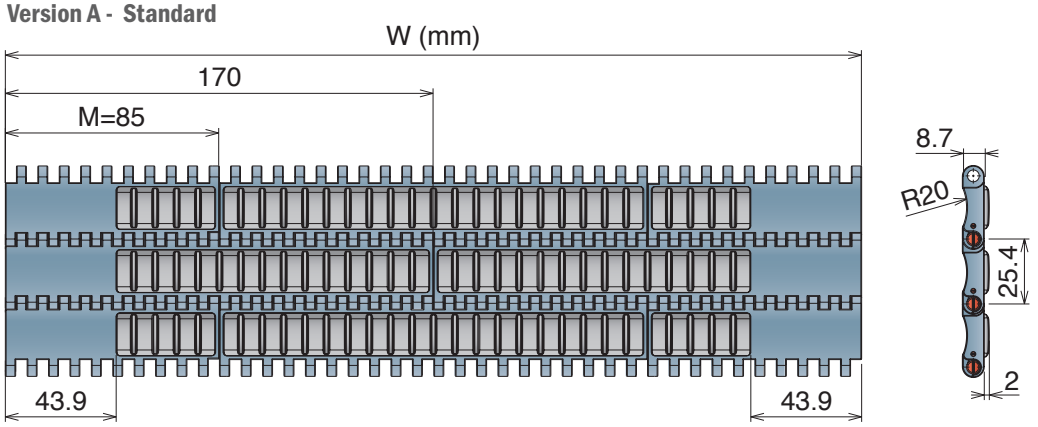

Version B - With 1 Positioner

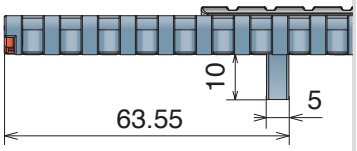

Version C - With 2 Positioner

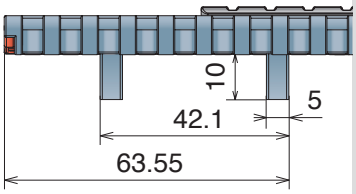

Version A - Standard

Series	Material	Width	Version
5225	*	0255	A
5225	*	0340	A
5225	*	0425	A
5225	*	0510	A
5225	*	0595	A
5225	*	0680	A
5225	*	0765	A
5225	*	0850	A
5225	*	0935	A
5225	*	1020	A
5225	*	1105	A
5225	*	1190	A
5225	*	1275	A
5225	*	1360	A
5225	*	1445	A
5225	*	1530	A

Version B - With 1 Positioner

Series	Material	Width	Version
5225	*	0255	B
5225	*	0340	B
5225	*	0425	B
5225	*	0510	B
5225	*	0595	B
5225	*	0680	B
5225	*	0765	B
5225	*	0850	B
5225	*	0935	B
5225	*	1020	B
5225	*	1105	B
5225	*	1190	B
5225	*	1275	B
5225	*	1360	B
5225	*	1445	B
5225	*	1530	B

Version C - With 2 Positioners

Series	Material	Width	Version
5225	*	0255	C
5225	*	0340	C
5225	*	0425	C
5225	*	0510	C
5225	*	0595	C
5225	*	0680	C
5225	*	0765	C
5225	*	0850	C
5225	*	0935	C
5225	*	1020	C
5225	*	1105	C
5225	*	1190	C
5225	*	1275	C
5225	*	1360	C
5225	*	1445	C
5225	*	1530	C

550 *PRO* FT

Tappeto Modulare 550 PRO FT, H=8,7 K330
Modular Belt Series 550 PRO FT, H=8,7 K330 / Modulare Mattenkette 550 PRO FT, H=8,7 K330

CODE STRUCTURE GUIDE (Example)			
5227	30	9330	A
Series	*Material	Width	Version

pg. 275-276 pg. 516->524

Backflex radius min.: 25 mm

25.4mm PITCH

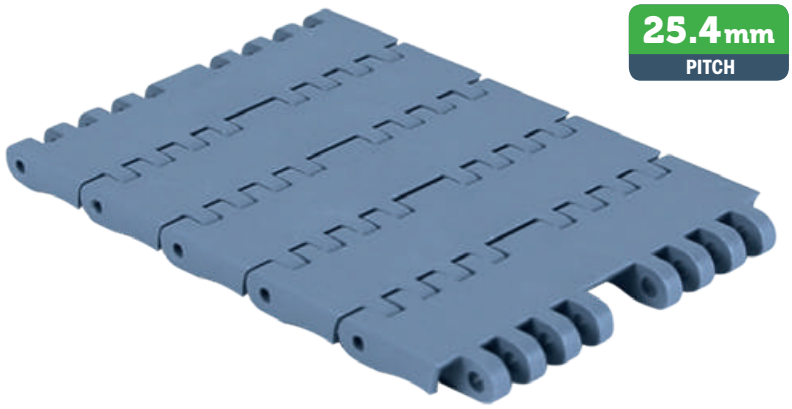

***Material**

LFA - Code 01
Low friction Acetal

Max w. load:	27500 N/m
Weight:	8,5 kg/m²
Temp. range dry:	-40÷80 °C
Temp. range wet:	-40÷65 °C
Pin material:	PBT white

MX - Code 03
Performance PBT

Max w. load:	22000 N/m
Weight:	8,2 kg/m²
Temp. range dry:	-40÷120 °C
Temp. range wet:	-40÷60 °C
Pin material:	POM grey

PFX - Code 30
Extra performance PBT

Max w. load:	22000 N/m
Weight:	8,2 kg/m²
Temp. range dry:	-40÷120 °C
Temp. range wet:	-40÷60 °C
Pin material:	POM grey

THE BEST CHOICE FOR DRY RUNNING APPLICATIONS

Version A - Standard

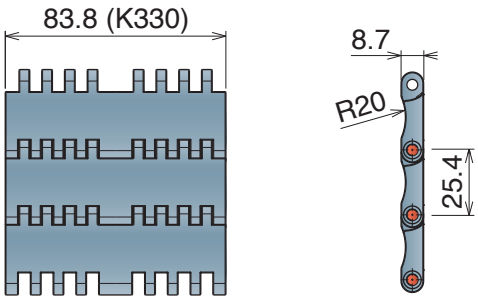

Version C - With 2 Positioner

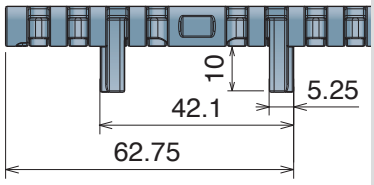

Version A - Standard

Series	Material	Width	Version
5227	*	9330	A

Version C - With 2 Positioners

Series	Material	Width	Version
5227	*	9330	C

New

550 *PRO M*

Tappeto Modulare 550 PRO M, H=8,7 K330
Modular Belt Series 550 PRO M, H=8,7 K330 /Modulare Mattenkette 550 PRO M, H=8,7 K330

CODE STRUCTURE GUIDE (Example)			
5228	30	9330	C
Series	*Material	Width	Version

Backflex radius min.: 15 mm

25.4mm PITCH

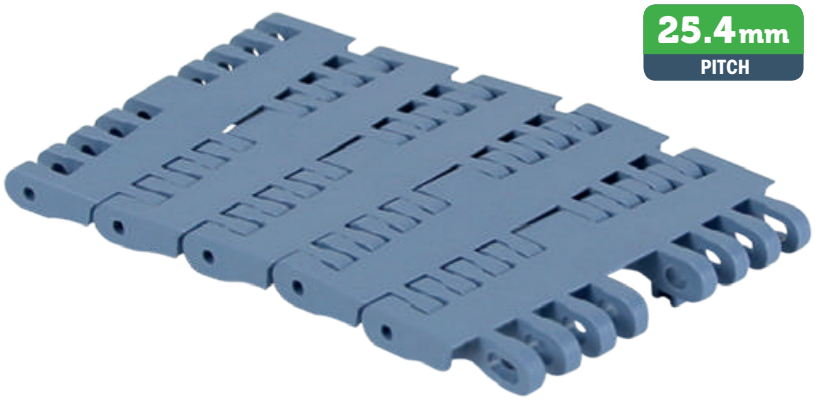

10 feet 3.048 m			
240 links	pg. 275-276	pg. 162	pg. 516->524

Magnetic System

***Material**

LFA - Code 01
Low friction Acetal

Max w. load:	30000 N/m
Weight:	8,2 kg/m²
Temp. range dry:	-40÷80 °C
Temp. range wet:	-40÷65 °C
Pin material:	Ferritic Stainless Steel

MX - Code 03
Performance PBT

Max w. load:	24000 N/m
Weight:	8,0 kg/m²
Temp. range dry:	-40÷120 °C
Temp. range wet:	-40÷60 °C
Pin material:	Ferritic Stainless Steel

PFX - Code 30
Extra performance PBT

Max w. load:	24000 N/m
Weight:	8,0 kg/m²
Temp. range dry:	-40÷120 °C
Temp. range wet:	-40÷60 °C
Pin material:	Ferritic Stainless Steel

THE BEST CHOICE FOR DRY RUNNING APPLICATIONS

Version C - With 2 Positioner

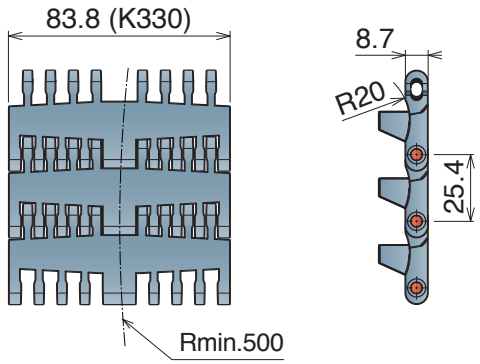

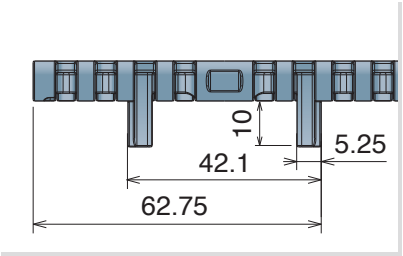

Version C - With 2 Positioners

Series	Material	Width	Version
5228	*	9330	C

551

Pitch 25,4 mm
H= 12,7 mm



Metric Size

551 FT
551 FTT
551 GT
551 GT *Side indent*
551 LBP
551 PRO LBP

Movex®

551 FT

Tappeto Modulare 551 FT, H=12,7 M=85
Modular Belt Series 551 FT, H=12,7 M=85 / Modulare Mattenkette 551 FT, H=12,7 M=85

CODE STRUCTURE GUIDE (Example)			
5231	01	0680	C
Series	*Material	Width	Version

Backflex radius min.: 25 mm

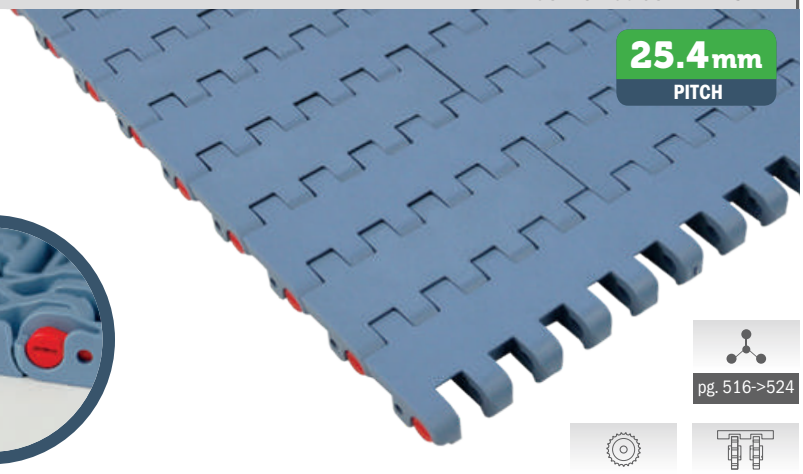



pg. 516->524
pg. 277-278
pg. 491

***Material**

LFA - Code 01
Low friction Acetal

Max w. load:	41500 N/m
Weight:	12,5 kg/m²
Temp. range dry:	-40÷80 °C
Temp. range wet:	-40÷65 °C
Pin material:	PBT white

PP - Code 02
Polypropylene

Max w. load:	27000 N/m
Weight:	10,0 kg/m²
Temp. range dry:	4÷80 °C
Temp. range wet:	4÷65 °C
Pin material:	PP blu

MX - Code 03
Performance PBT

Max w. load:	33500 N/m
Weight:	12,0 kg/m²
Temp. range dry:	-40÷120 °C
Temp. range wet:	-40÷60 °C
Pin material:	POM grey

DKM - Code 16
Aramide Reinforced Acetal

Max w. load:	41500 N/m
Weight:	12,5 kg/m²
Temp. range dry:	-40÷80 °C
Temp. range wet:	-40÷65 °C
Pin material:	PBT white

MWX - Code 17
Polyamide Composite

Max w. load:	41500 N/m
Weight:	13,0 kg/m²
Temp. range dry:	-40÷104 °C
Temp. range wet:	NR
Pin material:	PBT white

MPX - Code 25
Lubricated Acetal

Max w. load:	41500 N/m
Weight:	12,5 kg/m²
Temp. range dry:	-40÷80 °C
Temp. range wet:	-40÷65 °C
Pin material:	PBT white

PFX - Code 30
Extra performance PBT

Max w. load:	33500 N/m
Weight:	12,0 kg/m²
Temp. range dry:	-40÷120 °C
Temp. range wet:	-40÷60 °C
Pin material:	POM grey

THE BEST CHOICE FOR DRY RUNNING APPLICATIONS

Version A - Standard

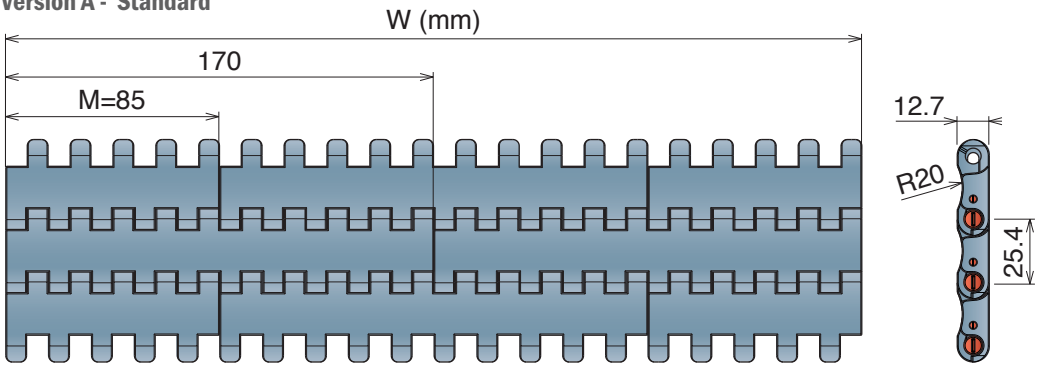

Version B - With 1 Positioner

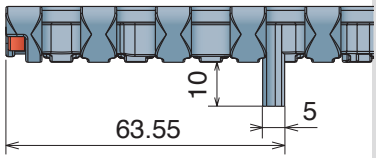

Version C - With 2 Positioner

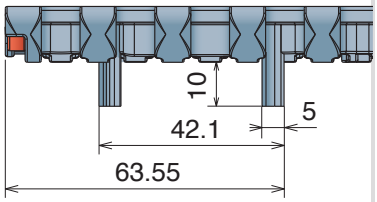

Version A - Standard

Series	Material	Width	Version
5231	*	0085	A
5231	*	0170	A
5231	*	0255	A
5231	*	0340	A
5231	*	0425	A
5231	*	0510	A
5231	*	0595	A
5231	*	0680	A
5231	*	0765	A
5231	*	0850	A
5231	*	0935	A
5231	*	1020	A
5231	*	1105	A
5231	*	1190	A
5231	*	1275	A
5231	*	1360	A
5231	*	1445	A
5231	*	1530	A

Version B - With 1 Positioner

Series	Material	Width	Version
5231	*	0085	B
5231	*	0170	B
5231	*	0255	B
5231	*	0340	B
5231	*	0425	B
5231	*	0510	B
5231	*	0595	B
5231	*	0680	B
5231	*	0765	B
5231	*	0850	B
5231	*	0935	B
5231	*	1020	B
5231	*	1105	B
5231	*	1190	B
5231	*	1275	B
5231	*	1360	B
5231	*	1445	B
5231	*	1530	B

Version C - With 2 Positioners

Series	Material	Width	Version
5231	*	0085	C
5231	*	0170	C
5231	*	0255	C
5231	*	0340	C
5231	*	0425	C
5231	*	0510	C
5231	*	0595	C
5231	*	0680	C
5231	*	0765	C
5231	*	0850	C
5231	*	0935	C
5231	*	1020	C
5231	*	1105	C
5231	*	1190	C
5231	*	1275	C
5231	*	1360	C
5231	*	1445	C
5231	*	1530	C

551 FTT

Tappeto Modulare 551 FTT, H=12,7 M=85
Modular Belt Series 551 FTT, H=12,7 M=85 / Modulare Mattenkette 551 FTT, H=12,7 M=85

CODE STRUCTURE GUIDE (Example)			
5236	01	0085	C
Series	*Material	Width	Version

pg. 277-278 | pg. 516->524 | pg. 491

Backflex radius min.: 25 mm

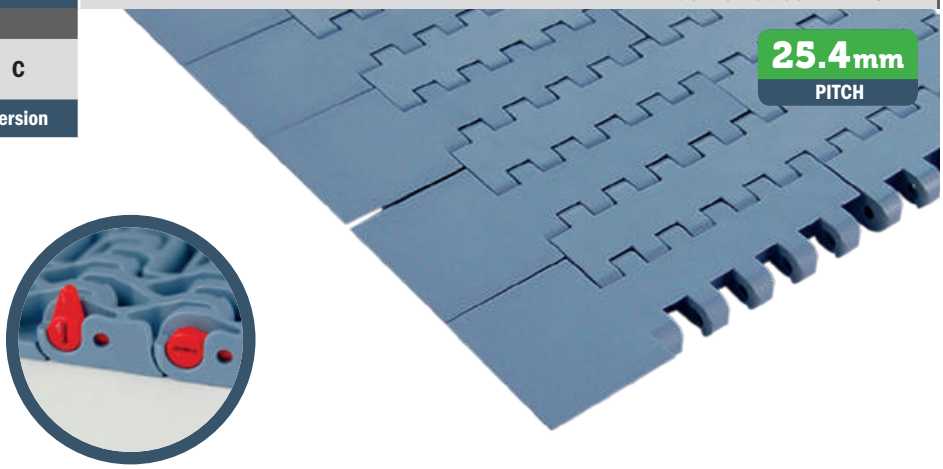

*Material

LFA - Code 01
Low friction Acetal

Max w. load:	41500 N/m
Weight:	12,5 kg/m²
Temp. range dry:	-40÷80 °C
Temp. range wet:	-40÷65 °C
Pin material:	PBT white

MX - Code 03
Performance PBT

Max w. load:	33500 N/m
Weight:	12,0 kg/m²
Temp. range dry:	-40÷120 °C
Temp. range wet:	-40÷60 °C
Pin material:	POM grey

MPX - Code 25
Lubricated Acetal

Max w. load:	41500 N/m
Weight:	12,5 kg/m²
Temp. range dry:	-40÷80 °C
Temp. range wet:	-40÷65 °C
Pin material:	PBT white

Version C

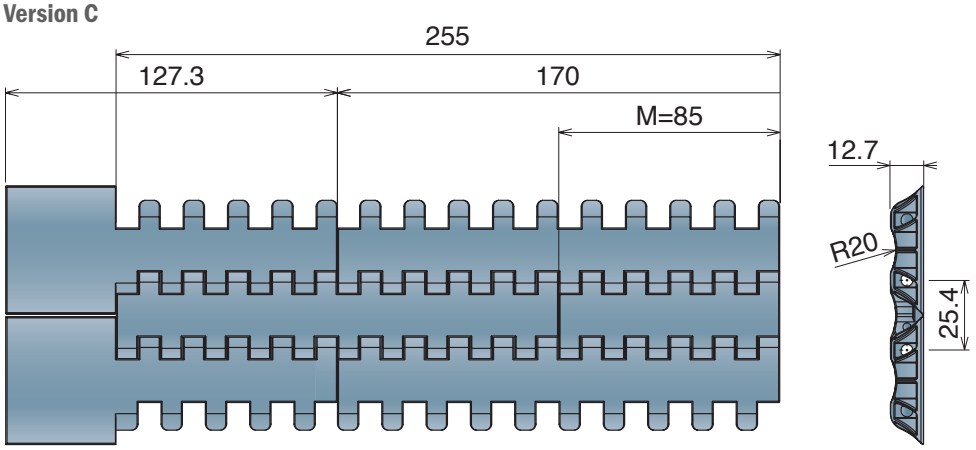

Version CN - Near

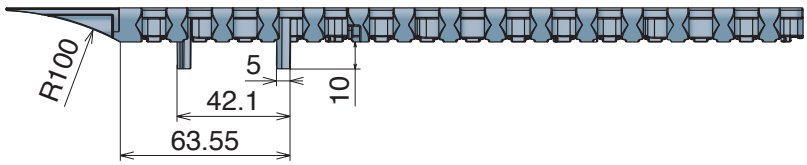

Version CO - Opposite



Version C

Series	Material	Width	Version
5236	*	0085	C

Version CN - Near

Series	Material	Width	Version
5236	*	0170	CN
5236	*	0255	CN

Version CO - Opposite

Series	Material	Width	Version
5236	*	0170	CO
5236	*	0255	CO

On request available with bigger/different width

551 GT

Tappeto Modulare 551 GT, H=12,7 M=85
Modular Belt Series 551 GT, H=12,7 M=85 / Modulare Mattenkette 551 GT, H=12,7 M=85

Metric Size

CODE STRUCTURE GUIDE (Example)			
5233	01	0255	B
Series	*Material	Width	Version

pg. 277-278 | pg. 516->524 | pg. 491

Backflex radius min.: 50 mm

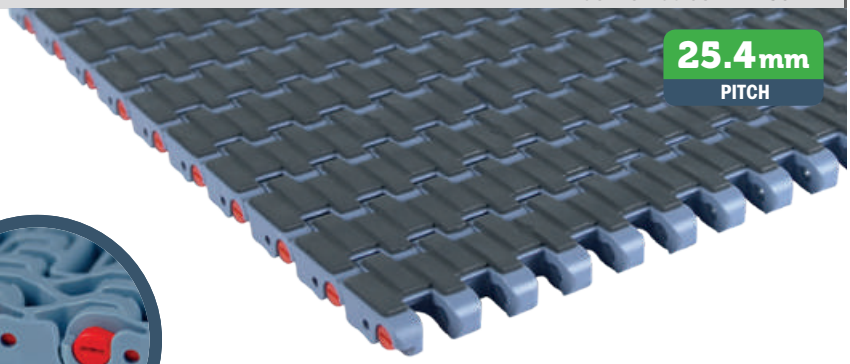



*Material

LFA - Code 01
Low friction Acetal

Max w. load:	41500 N/m
Weight:	13,5 kg/m²
Temp. range dry:	-40÷80 °C
Temp. range wet:	-40÷65 °C
Pin material:	PBT white
Hardness of Grip top Rubber:	75 ShA

PP - Code 02
Polypropylene

Max w. load:	27000 N/m
Weight:	11,0 kg/m²
Temp. range dry:	4÷80 °C
Temp. range wet:	4÷65 °C
Pin material:	PP blu
Hardness of Grip top Rubber:	75 ShA

MX - Code 03
Performance PBT

Max w. load:	33500 N/m
Weight:	12,7 kg/m²
Temp. range dry:	-40÷120 °C
Temp. range wet:	-40÷60 °C
Pin material:	POM grey
Hardness of Grip top Rubber:	75 ShA

Version A - Standard

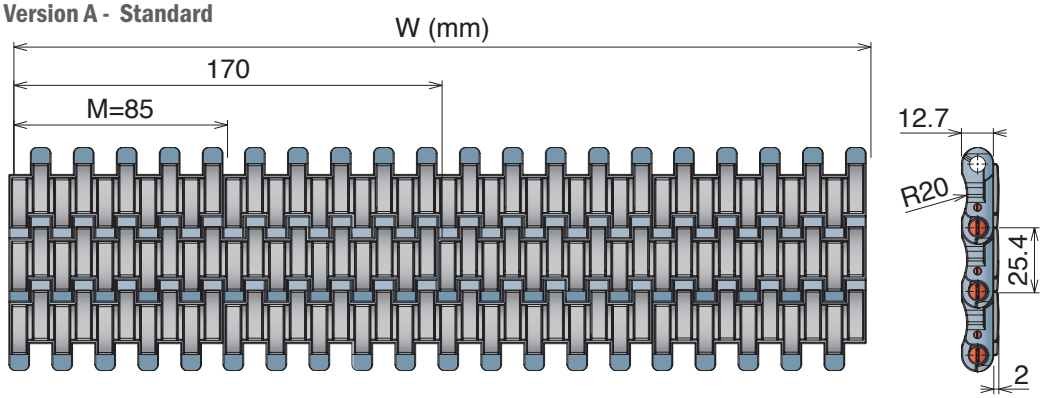

Version B - With 1 Positioner

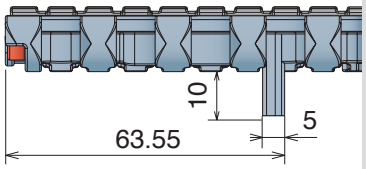

Version C - With 2 Positioner

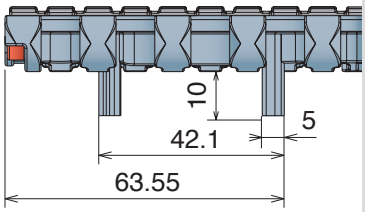

Version A - Standard

Series	Material	Width	Version
5233	*	0085	A
5233	*	0170	A
5233	*	0255	A
5233	*	0340	A
5233	*	0425	A
5233	*	0510	A
5233	*	0595	A
5233	*	0680	A
5233	*	0765	A
5233	*	0850	A
5233	*	0935	A
5233	*	1020	A
5233	*	1105	A
5233	*	1190	A
5233	*	1275	A
5233	*	1360	A
5233	*	1445	A
5233	*	1530	A

Version B - With 1 Positioner

Series	Material	Width	Version
5233	*	0085	B
5233	*	0170	B
5233	*	0255	B
5233	*	0340	B
5233	*	0425	B
5233	*	0510	B
5233	*	0595	B
5233	*	0680	B
5233	*	0765	B
5233	*	0850	B
5233	*	0935	B
5233	*	1020	B
5233	*	1105	B
5233	*	1190	B
5233	*	1275	B
5233	*	1360	B
5233	*	1445	B
5233	*	1530	B

Version C - With 2 Positioners

Series	Material	Width	Version
5233	*	0085	C
5233	*	0170	C
5233	*	0255	C
5233	*	0340	C
5233	*	0425	C
5233	*	0510	C
5233	*	0595	C
5233	*	0680	C
5233	*	0765	C
5233	*	0850	C
5233	*	0935	C
5233	*	1020	C
5233	*	1105	C
5233	*	1190	C
5233	*	1275	C
5233	*	1360	C
5233	*	1445	C
5233	*	1530	C

551 GT *Side indent* Tappeto Modulare 551 GT, H=12,7 M=85

Modular Belt Series 551 GT, H=12,7 M=85 / Modulare Mattenkette 551 GT, H=12,7 M=85

CODE STRUCTURE GUIDE (Example)			
5235	02	0765	A
Series	*Material	Width	Version

pg. 277-278 | pg. 516->524 | pg. 491

Backflex radius min.: 50 mm

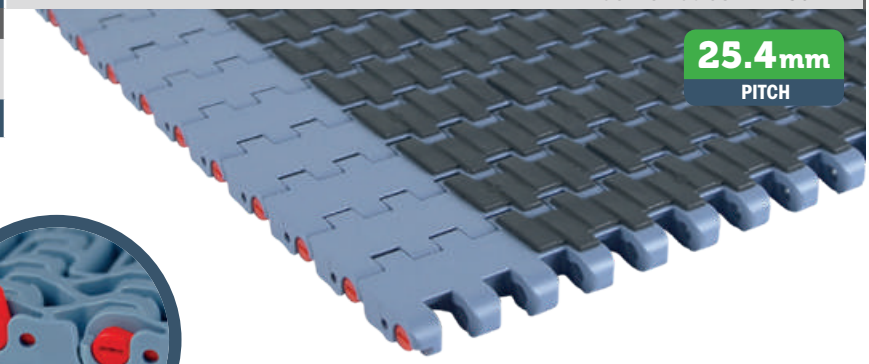



*Material

LFA - Code 01
Low friction Acetal

Max w. load:	41500 N/m
Weight:	13,5 kg/m²
Temp. range dry:	-40÷80 °C
Temp. range wet:	-40÷65 °C
Pin material:	PBT white
Hardness of Grip top Rubber:	75 ShA

PP - Code 02
Polypropylene

Max w. load:	27000 N/m
Weight:	11,0 kg/m²
Temp. range dry:	4÷80 °C
Temp. range wet:	4÷65 °C
Pin material:	PP blu
Hardness of Grip top Rubber:	75 ShA

MX - Code 03
Performance PBT

Max w. load:	33500 N/m
Weight:	12,7 kg/m²
Temp. range dry:	-40÷120 °C
Temp. range wet:	-40÷60 °C
Pin material:	POM grey
Hardness of Grip top Rubber:	75 ShA

Version A - Standard

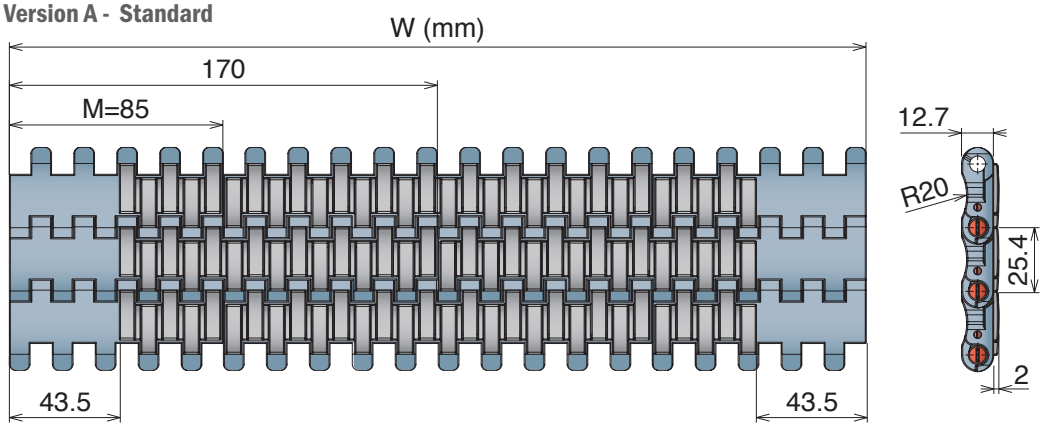

Version B - With 1 Positioner

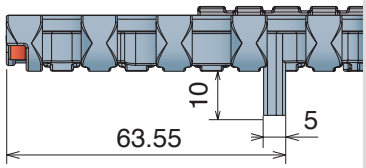

Version C - With 2 Positioner

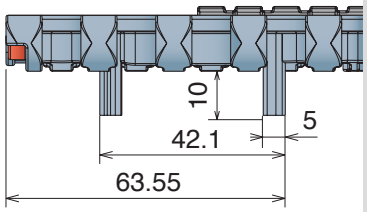

Version A - Standard

Series	Material	Width	Version
5235	*	0255	A
5235	*	0340	A
5235	*	0425	A
5235	*	0510	A
5235	*	0595	A
5235	*	0680	A
5235	*	0765	A
5235	*	0850	A
5235	*	0935	A
5235	*	1020	A
5235	*	1105	A
5235	*	1190	A
5235	*	1275	A
5235	*	1360	A
5235	*	1445	A
5235	*	1530	A

Version B - With 1 Positioner

Series	Material	Width	Version
5235	*	0255	B
5235	*	0340	B
5235	*	0425	B
5235	*	0510	B
5235	*	0595	B
5235	*	0680	B
5235	*	0765	B
5235	*	0850	B
5235	*	0935	B
5235	*	1020	B
5235	*	1105	B
5235	*	1190	B
5235	*	1275	B
5235	*	1360	B
5235	*	1445	B
5235	*	1530	B

Version C - With 2 Positioners

Series	Material	Width	Version
5235	*	0255	C
5235	*	0340	C
5235	*	0425	C
5235	*	0510	C
5235	*	0595	C
5235	*	0680	C
5235	*	0765	C
5235	*	0850	C
5235	*	0935	C
5235	*	1020	C
5235	*	1105	C
5235	*	1190	C
5235	*	1275	C
5235	*	1360	C
5235	*	1445	C
5235	*	1530	C

551 LBP

Tappeto Modulare 551 LBP, H=12,7 M=85
Modular Belt Series 551 LBP, H=12,7 M=85 / Modulare Mattenkette 551 LBP, H=12,7 M=85

Metric Size

CODE STRUCTURE GUIDE (Example)			
5234	01	0425	A
Series	*Material	Width	Version

pg. 277-278 pg. 516->524 pg. 491

Backflex radius min.: 120 mm

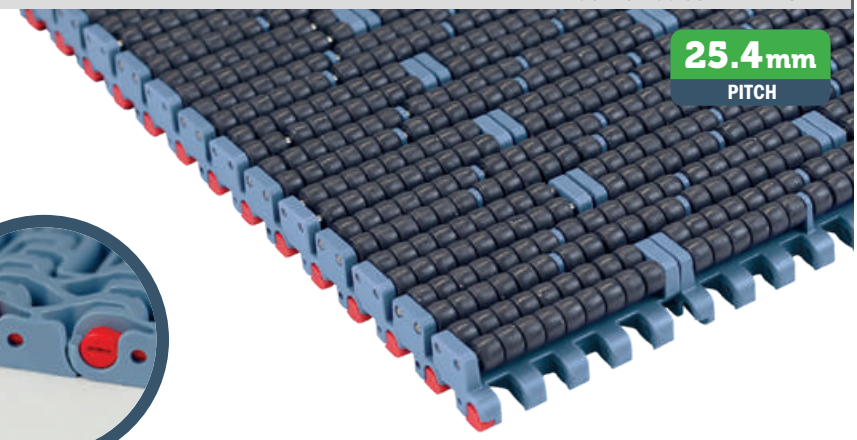

***Material**

LFA - Code 01
Low friction Acetal

Max w. load:	41500 N/m
Weight:	26,9 kg/m²
Temp. range dry:	-40÷80 °C
Temp. range wet:	-40÷65 °C
Pin material:	PBT white

Version A - Standard

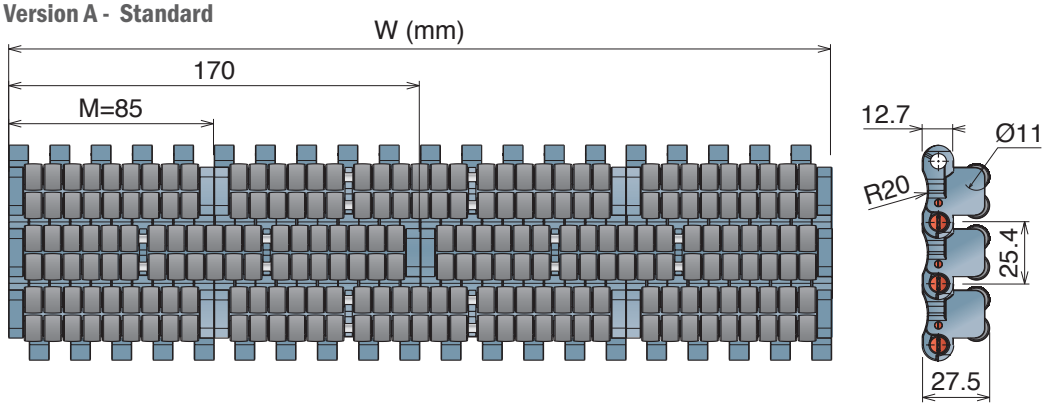

Version B - With 1 Positioner

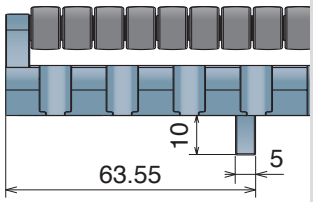

Version C - With 2 Positioner

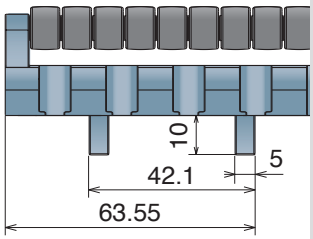

Version A - Standard

Series	Material	Width	Version
5234	*	0085	A
5234	*	0170	A
5234	*	0255	A
5234	*	0340	A
5234	*	0425	A
5234	*	0510	A
5234	*	0595	A
5234	*	0680	A
5234	*	0765	A
5234	*	0850	A
5234	*	0935	A
5234	*	1020	A
5234	*	1105	A
5234	*	1190	A
5234	*	1275	A
5234	*	1360	A
5234	*	1445	A
5234	*	1530	A

Version B - With 1 Positioner

Series	Material	Width	Version
5234	*	0085	B
5234	*	0170	B
5234	*	0255	B
5234	*	0340	B
5234	*	0425	B
5234	*	0510	B
5234	*	0595	B
5234	*	0680	B
5234	*	0765	B
5234	*	0850	B
5234	*	0935	B
5234	*	1020	B
5234	*	1105	B
5234	*	1190	B
5234	*	1275	B
5234	*	1360	B
5234	*	1445	B
5234	*	1530	B

Version C - With 2 Positioners

Series	Material	Width	Version
5234	*	0085	C
5234	*	0170	C
5234	*	0255	C
5234	*	0340	C
5234	*	0425	C
5234	*	0510	C
5234	*	0595	C
5234	*	0680	C
5234	*	0765	C
5234	*	0850	C
5234	*	0935	C
5234	*	1020	C
5234	*	1105	C
5234	*	1190	C
5234	*	1275	C
5234	*	1360	C
5234	*	1445	C
5234	*	1530	C

551 PRO LBP

Modular Belt Series 551 PRO LBP H=12.15 M=85

Energy
25% less energy consumed.
Lower belt weight and smooth rotation of the rollers guarantee minimal backline pressure.

Backline pressure
During accumulation phase,
30% less pressure on the product.

Pins connection
Improved pins and roller connection
available pins in Plastic or SS.

Easy clip
Easy and quick installation and use.



Radius in modules
Minimizes chordal action
with transfer plate ø 50 mm.

Safe design
Reduces gaps between the rollers for a more
secure solution for the chain.

551 PRO LBP, the new concept of accumulation: less noise, smaller in-line transfer area and lighter than the standard LBP chains and belts. These features offer an advantage in energy consumption, reduced friction and noise level.

551 PRO LBP is designed with a finger protection device between the modules.

The Difference with a standard LBP

GAPS BETWEEN ROLLERS

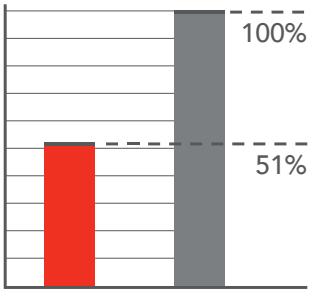

PRO Standard LBP chain

HEADSHAFT TENSION

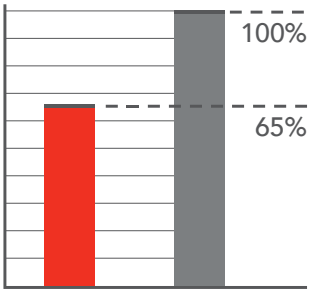

PRO Standard LBP chain

BACKLINE PRESSURE

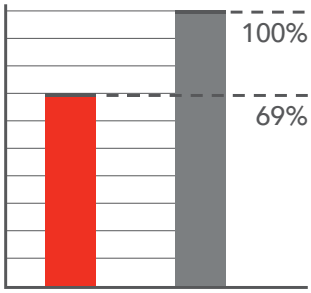

PRO Standard LBP chain

High performance
- -30% Backline pressure
- Improved roller and pins connection
- Smaller head to tail transfers

Best Safety
- Small gaps between rollers, to protect operator
- Permanently fixed roller pins
- Improved low noise

Energy saving
- Low chain weight
- Reduction of friction
- Wearstrips in BluLub® are recommended

Check with the Movex application department the possibilities to use it.

551 PRO LBP

Tappeto Modulare 551 PRO LBP, H=12,7 M=85
Modular Belt Series 551 PRO LBP, H=12,7 M=85 / Modulare Mattenkette 551 PRO LBP, H=12,7 M=85

CODE STRUCTURE GUIDE (Example)			
5237	01	0425	A
Series	*Material	Width	Version

pg. 277-278 | pg. 516->524 | pg. 491

Backflex radius min.: 100 mm

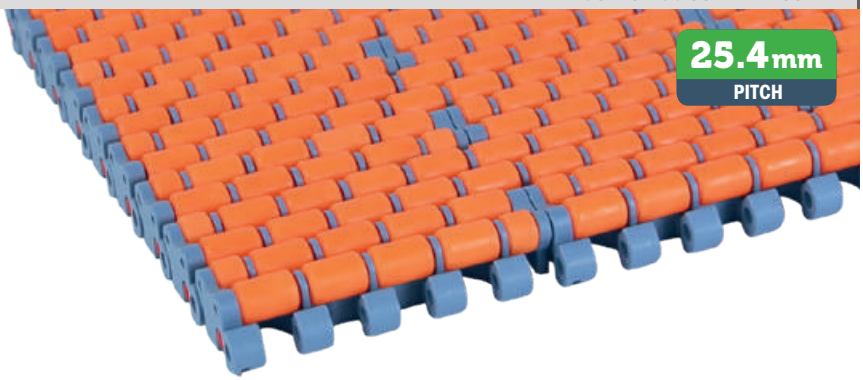

Standard with PFX rollers

Material

LFA - Code 01
Low friction Acetal

Max w. load:	41500 N/m
Weight SS pin:	13,8 kg/m²
Weight Plastic pin:	11,0 kg/m²
Temp. range dry:	-40÷80 °C
Temp. range wet:	-40÷65 °C
Pin material:	PBT white

PFX Roller

THE BEST CHOICE FOR DRY RUNNING APPLICATIONS

Patented

Version A - Standard

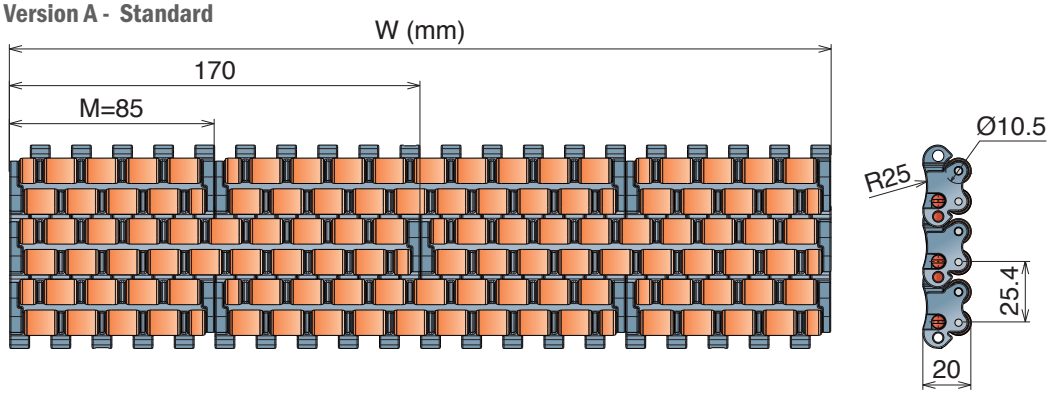

Version B - With 1 Positioner

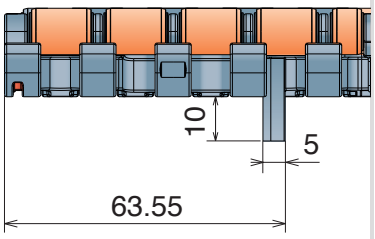

Version C - With 2 Positioner

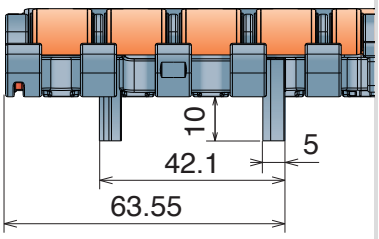



Stainless steel Pin

Series	Material	Width	*Version
5239	01	0085	*
5239	01	0170	*
5239	01	0255	*
5239	01	0340	*
5239	01	0425	*
5239	01	0510	*
5239	01	0595	*
5239	01	0680	*



Plastic Pin

Series	Material	Width	*Version
5240	01	0085	*
5240	01	0170	*
5240	01	0255	*
5240	01	0340	*
5240	01	0425	*
5240	01	0510	*
5240	01	0595	*
5240	01	0680	*

*Version					
Standard	Add **A**	With 1 Positioner	Add **B**	With 2 Positioners	Add **C**

552

Pitch 25,4 mm
H= 12,7 mm



552 FT
552 FT *One track Belt*
552 FTT
552 PT
552 PT *One track Belt*
552 GT

552 GT *Side indent*

Movex®

552 FT

Tappeto Modulare 552 FT, H=12,7 M=3"
Modular Belt Series 552 FT, H=12,7 M=3" / Modulare Mattenkette 552 FT, H=12,7 M=3"

CODE STRUCTURE GUIDE (Example)			
5341	01	0021	A
Series	*Material	Width	Version

Backflex radius min.: 25 mm

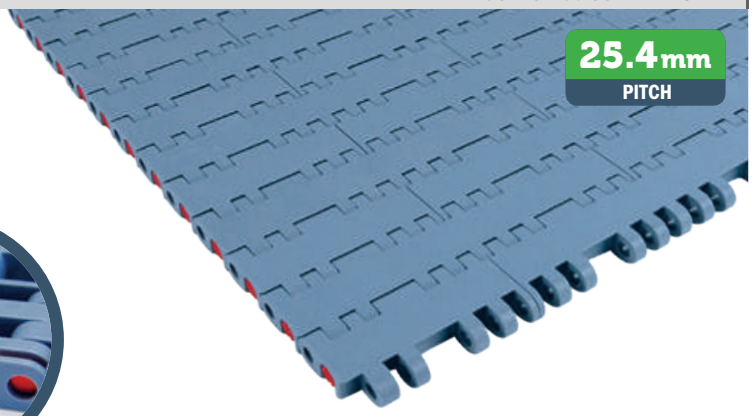

pg. 279 pg. 516->524 pg. 492



***Material**

LFA - Code 01
Low friction Acetal

Max w. load:	41500 N/m
Weight:	13,5 kg/m²
Temp. range dry:	-40÷80 °C
Temp. range wet:	-40÷65 °C
Pin material:	PBT white

MX - Code 03
Performance PBT

Max w. load:	33500 N/m
Weight:	13,0 kg/m²
Temp. range dry:	-40÷120 °C
Temp. range wet:	-40÷60 °C
Pin material:	POM grey

MWX - Code 17
Polyamide Composite

Max w. load:	41500 N/m
Weight:	14,0 kg/m²
Temp. range dry:	-40÷104 °C
Temp. range wet:	NR
Pin material:	PBT white

MPX - Code 25
Lubricated Acetal

Max w. load:	41500 N/m
Weight:	13,5 kg/m²
Temp. range dry:	-40÷80 °C
Temp. range wet:	-40÷65 °C
Pin material:	PBT white

Version A - Standard

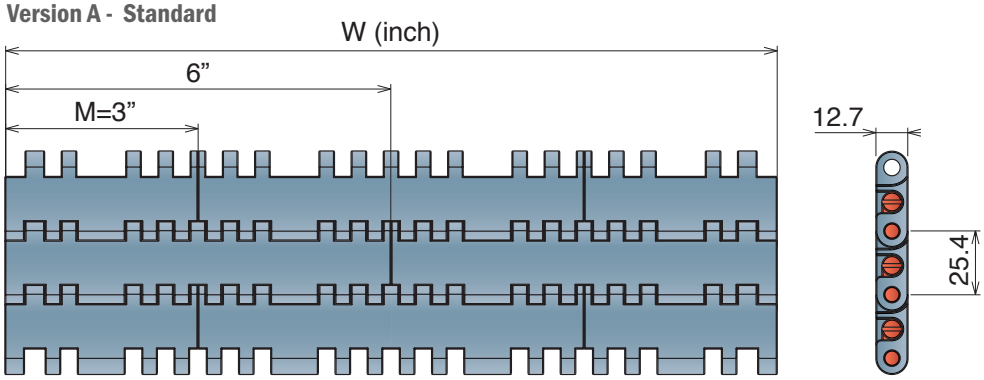

Version A - Standard

Series	Material	Width	Version
5341	*	0009	A
5341	*	0012	A
5341	*	0015	A
5341	*	0018	A
5341	*	0021	A
5341	*	0024	A
5341	*	0027	A
5341	*	0030	A
5341	*	0033	A
5341	*	0036	A
5341	*	0039	A
5341	*	0042	A
5341	*	0045	A
5341	*	0048	A
5341	*	0051	A
5341	*	0054	A

552 FT *One track Belt* Tappeto Modulare 552 FT, H=12,7

Modular Belt Series 552 FT, H=12,7 / Modulare Mattenkette 552 FT, H=12,7

CODE STRUCTURE GUIDE (Example)			
5341	01	0003	A
Series	*Material	Width	Version

pg. 279 | pg. 516->524 | pg. 493

Backflex radius min.: 25 mm

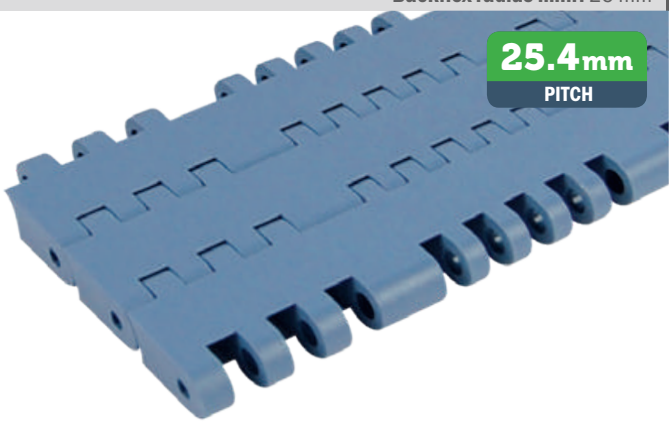



***Material**

LFA - Code 01
Low friction Acetal

Max w. load:	41500 N/m
Weight:	13,5 kg/m²
Temp. range dry:	-40÷80 °C
Temp. range wet:	-40÷65 °C
Pin material:	PBT white

MX - Code 03
Performance PBT

Max w. load:	33500 N/m
Weight:	13,0 kg/m²
Temp. range dry:	-40÷120 °C
Temp. range wet:	-40÷60 °C
Pin material:	POM grey

MWX - Code 17
Polyamide Composite

Max w. load:	41500 N/m
Weight:	14,0 kg/m²
Temp. range dry:	-40÷104 °C
Temp. range wet:	NR
Pin material:	PBT white

MPX - Code 25
Lubricated Acetal

Max w. load:	41500 N/m
Weight:	13,5 kg/m²
Temp. range dry:	-40÷80 °C
Temp. range wet:	-40÷65 °C
Pin material:	PBT white

Version A - Standard

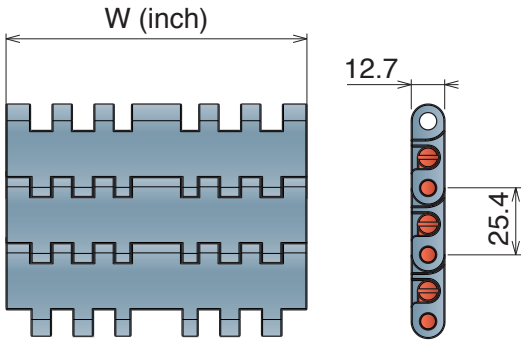

Version C - With 2 Positioner

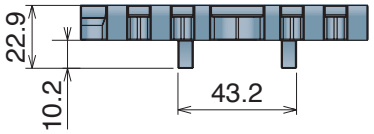

Version A/C
One track belt

Series	Material	Width	Version
5341	*	0003	A
5341	*	0006	A
5341	*	0003	C
5341	*	0006	C



K325 - One track belt

Series	Material	Width	Version
5341	*	9325	A
5341	*	9325	C



K450 - One track belt

Series	Material	Width	Version
5341	*	9450	A
5341	*	9450	C



K750 - One track belt

Series	Material	Width	Version
5341	*	9750	A
5341	*	9750	C

552 FTT

Tappeto Modulare 552 FTT, H=12,7
Modular Belt Series 552 FTT, H=12,7 / Modulare Mattenkette 552 FTT, H=12,7

CODE STRUCTURE GUIDE (Example)			
5346	01	9450	C-R
Series	*Material	Width	Version

pg. 279 | pg. 516->524 | pg. 493

Backflex radius min.: 25 mm

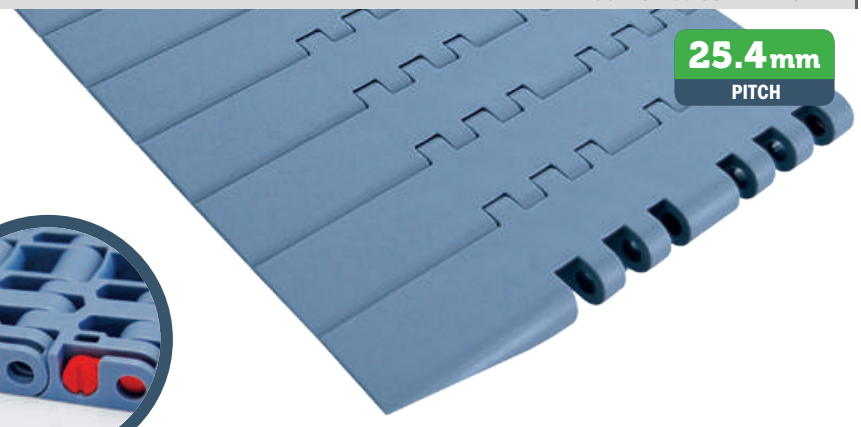

*Material

LFA - Code 01
Low friction Acetal

Max w. load:	41500 N/m
Weight:	13,5 kg/m²
Temp. range dry:	-40÷80 °C
Temp. range wet:	-40÷65 °C
Pin material:	PBT white

MX - Code 03
Performance PBT

Max w. load:	33500 N/m
Weight:	13,0 kg/m²
Temp. range dry:	-40÷120 °C
Temp. range wet:	-40÷60 °C
Pin material:	POM grey

MWX - Code 17
Polyamide Composite

Max w. load:	41500 N/m
Weight:	14,0 kg/m²
Temp. range dry:	-40÷104 °C
Temp. range wet:	NR
Pin material:	PBT white

MPX - Code 25
Lubricated Acetal

Max w. load:	41500 N/m
Weight:	13,5 kg/m²
Temp. range dry:	-40÷80 °C
Temp. range wet:	-40÷65 °C
Pin material:	PBT white

552 FTT - DX Version

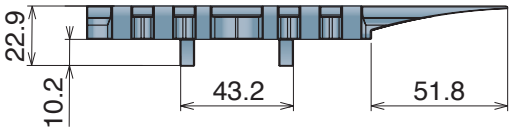

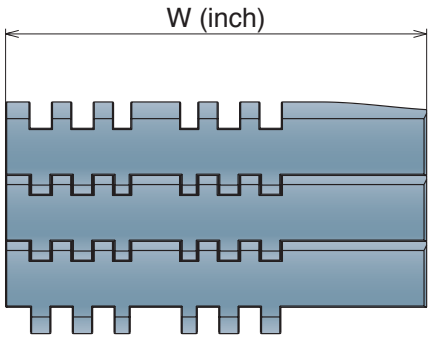

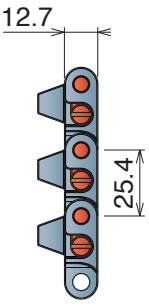

K450 / K750

Series	Material	Width	Version	Total width
5346	*	**9450**	**C - R**	160.3
5346	*	**9750**	**C - R**	237.4

552 FTT - SX Version

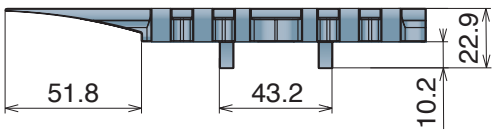

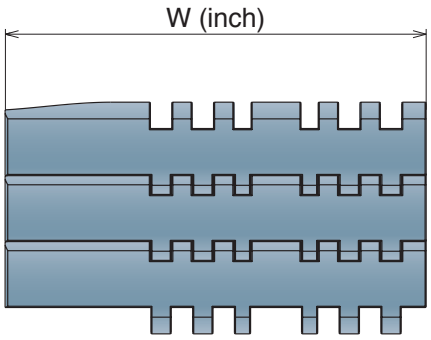

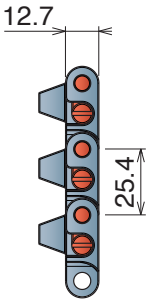

K450 / K750

Series	Material	Width	Version	Total width
5346	*	**9450**	**C - L**	160.3
5346	*	**9750**	**C - L**	237.4

552 PT Open Surface 8% Tappeto Modulare 552 PT, H=12,7 M=3”

Modular Belt Series 552 PT, H=12,7 M=3” / Modulare Mattenkette 552 PT, H=12,7 M=3”

CODE STRUCTURE GUIDE (Example)			
5342	01	0009	A
Series	*Material	Width	Version

pg. 279 pg. 516->524 pg. 492

Backflex radius min.: 25 mm

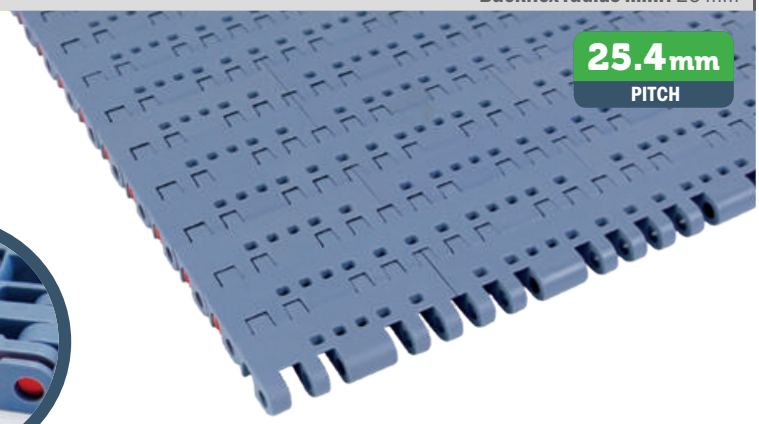



*Material

LFA - Code 01
Low friction Acetal

Max w. load:	41500 N/m
Weight:	13,2 kg/m²
Temp. range dry:	-40÷80 °C
Temp. range wet:	-40÷65 °C
Pin material:	PBT white

MX - Code 03
Performance PBT

Max w. load:	33500 N/m
Weight:	12,7 kg/m²
Temp. range dry:	-40÷120 °C
Temp. range wet:	-40÷60 °C
Pin material:	POM grey

MWX - Code 17
Polyamide Composite

Max w. load:	41500 N/m
Weight:	13,7 kg/m²
Temp. range dry:	-40÷104 °C
Temp. range wet:	NR
Pin material:	PBT white

MPX - Code 25
Lubricated Acetal

Max w. load:	41500 N/m
Weight:	13,2 kg/m²
Temp. range dry:	-40÷80 °C
Temp. range wet:	-40÷65 °C
Pin material:	PBT white

Version A - Standard

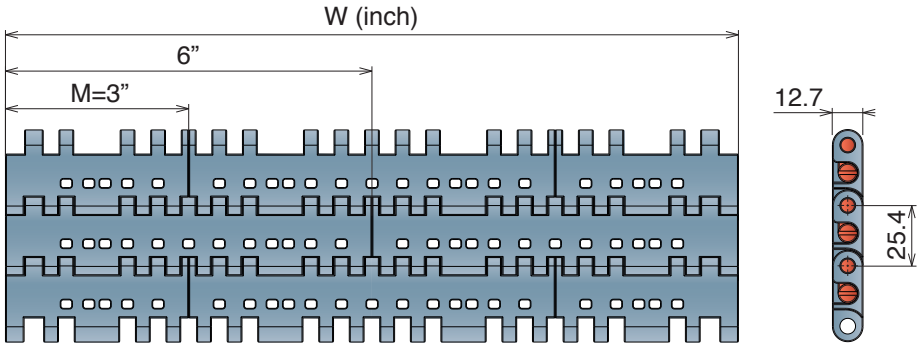

Version A - Standard

Series	Material	Width	Version
5342	*	0009	A
5342	*	0012	A
5342	*	0015	A
5342	*	0018	A
5342	*	0021	A
5342	*	0024	A
5342	*	0027	A
5342	*	0030	A
5342	*	0033	A
5342	*	0036	A
5342	*	0039	A
5342	*	0042	A
5342	*	0045	A
5342	*	0048	A
5342	*	0051	A
5342	*	0054	A

552 PT *One track Belt* Open Surface 8% Tappeto Modulare 552 PT, H=12,7 M=3"

Modular Belt Series 552 PT, H=12,7 M=3" / Modulare Mattenkette 552 PT, H=12,7 M=3"

CODE STRUCTURE GUIDE (Example)			
5342	01	0003	A
Series	*Material	Width	Version

Backflex radius min.: 25 mm

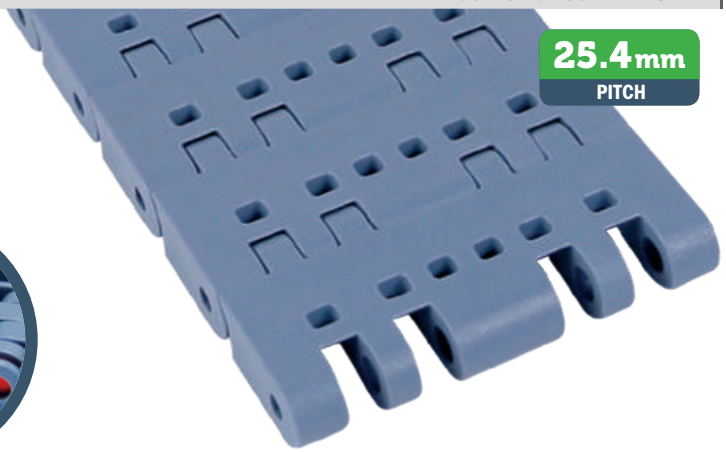



pg. 279
pg. 516->524

*Material

LFA - Code 01
Low friction Acetal

Max w. load:	41500 N/m
Weight:	13,2 kg/m²
Temp. range dry:	-40÷80 °C
Temp. range wet:	-40÷65 °C
Pin material:	PBT white

MX - Code 03
Performance PBT

Max w. load:	33500 N/m
Weight:	12,7 kg/m²
Temp. range dry:	-40÷120 °C
Temp. range wet:	-40÷60 °C
Pin material:	POM grey

MWX - Code 17
Polyamide Composite

Max w. load:	41500 N/m
Weight:	13,7 kg/m²
Temp. range dry:	-40÷104 °C
Temp. range wet:	NR
Pin material:	PBT white

MPX - Code 25
Lubricated Acetal

Max w. load:	41500 N/m
Weight:	13,2 kg/m²
Temp. range dry:	-40÷80 °C
Temp. range wet:	-40÷65 °C
Pin material:	PBT white

Version A - Standard

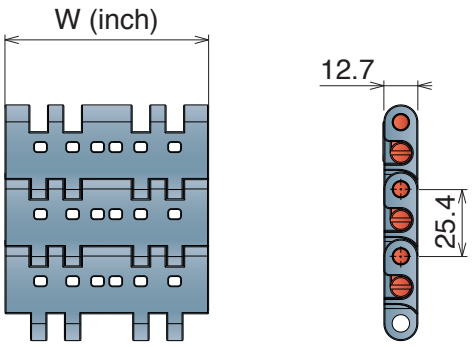

Version C - With 2 Positioner

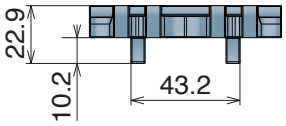

Version A - Standard

Series	Material	Width	Version
5342	*	0003	A
5342	*	0006	A

Version C - With 2 Positioners

Series	Material	Width	Version
5342	*	0003	C
5342	*	0006	C

552 GT

Tappeto Modulare 552 GT, H=12,7 M=3”
Modular Belt Series 552 GT, H=12,7 M=3” / Modulare Mattenkette 552 GT, H=12,7 M=3”

CODE STRUCTURE GUIDE (Example)			
5343	01	0009	A
Series	*Material	Width	Version

pg. 279 | pg. 516->524 | pg. 492

Backflex radius min.: 25 mm

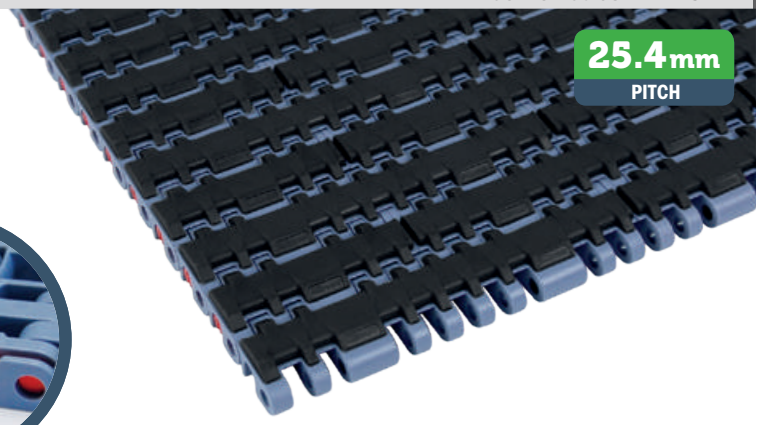



***Material**

LFA - Code 01
Low friction Acetal

Max w. load:	41500 N/m
Weight:	15,5 kg/m²
Temp. range dry:	-40÷80 °C
Temp. range wet:	-40÷65 °C
Pin material:	PBT white
Hardness of Grip top Rubber:	50 ShA

PP - Code 02
Polypropylene

Max w. load:	27000 N/m
Weight:	13,5 kg/m²
Temp. range dry:	4÷80 °C
Temp. range wet:	4÷65 °C
Pin material:	PP blu
Hardness of Grip top Rubber:	50 ShA

Version A - Standard

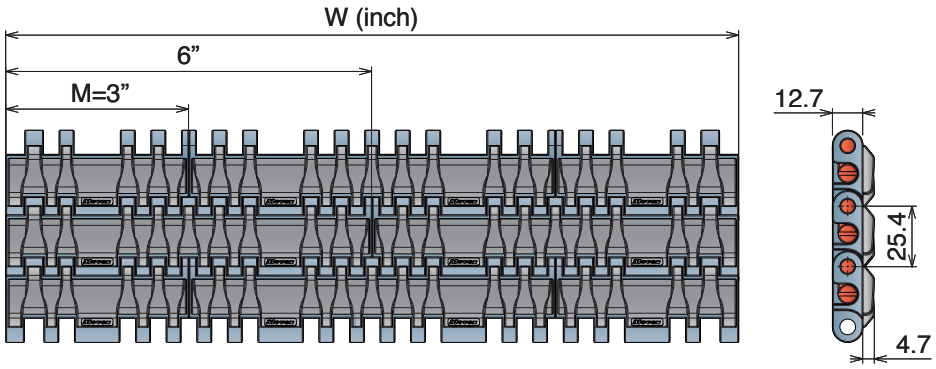

Version A - Standard

Series	Material	Width	Version
5343	*	0009	A
5343	*	0012	A
5343	*	0015	A
5343	*	0018	A
5343	*	0021	A
5343	*	0024	A
5343	*	0027	A
5343	*	0030	A
5343	*	0033	A
5343	*	0036	A
5343	*	0039	A
5343	*	0042	A
5343	*	0045	A
5343	*	0048	A
5343	*	0051	A
5343	*	0054	A



Rubber Thickness 4.7 mm

552 GT *Side indent* Tappeto Modulare 552 GT SI, H=12,7 M=3”

Modular Belt Series 552 GT SI, H=12,7 M=3” / Modulare Mattenkette 552 GT SI, H=12,7 M=3”

CODE STRUCTURE GUIDE (Example)			
5345	01	0009	A
Series	*Material	Width	Version

pg. 279 pg. 516->524 pg. 492

Backflex radius min.: 25 mm

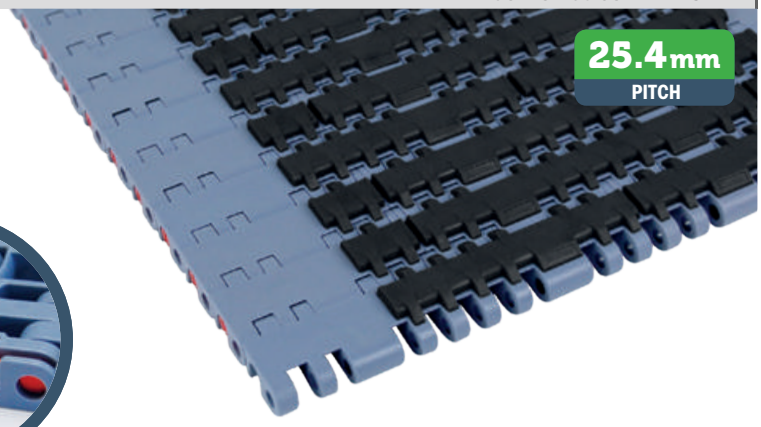



***Material**

LFA - Code 01
Low friction Acetal

Max w. load:	41500 N/m
Weight:	15,5 kg/m²
Temp. range dry:	-40÷80 °C
Temp. range wet:	-40÷65 °C
Pin material:	PBT white
Hardness of Grip top Rubber:	50 ShA

PP - Code 02
Polypropylene

Max w. load:	27000 N/m
Weight:	13,5 kg/m²
Temp. range dry:	4÷80 °C
Temp. range wet:	4÷65 °C
Pin material:	PP blu
Hardness of Grip top Rubber:	50 ShA

Version A - Standard

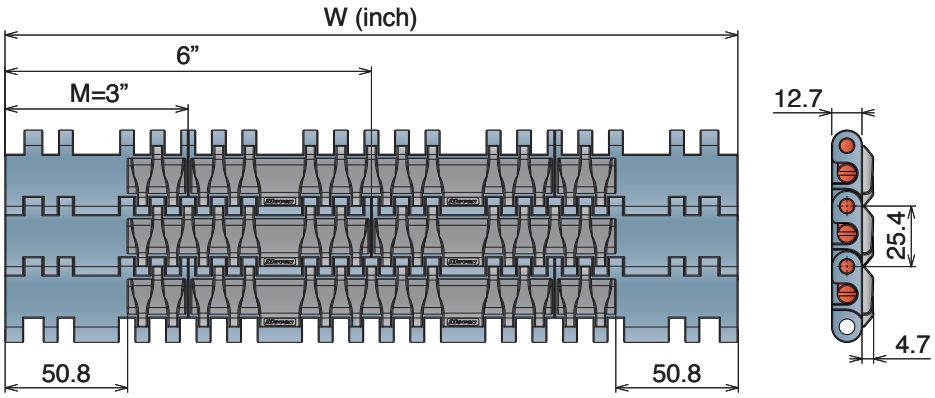

Version A - Standard

Series	Material	Width	Version
5345	*	0009	A
5345	*	0012	A
5345	*	0015	A
5345	*	0018	A
5345	*	0021	A
5345	*	0024	A
5345	*	0027	A
5345	*	0030	A
5345	*	0033	A
5345	*	0036	A
5345	*	0039	A
5345	*	0042	A
5345	*	0045	A
5345	*	0048	A
5345	*	0051	A
5345	*	0054	A



Rubber Thickness 4.7 mm

556

Pitch 25,4 mm
H= 12,7 mm

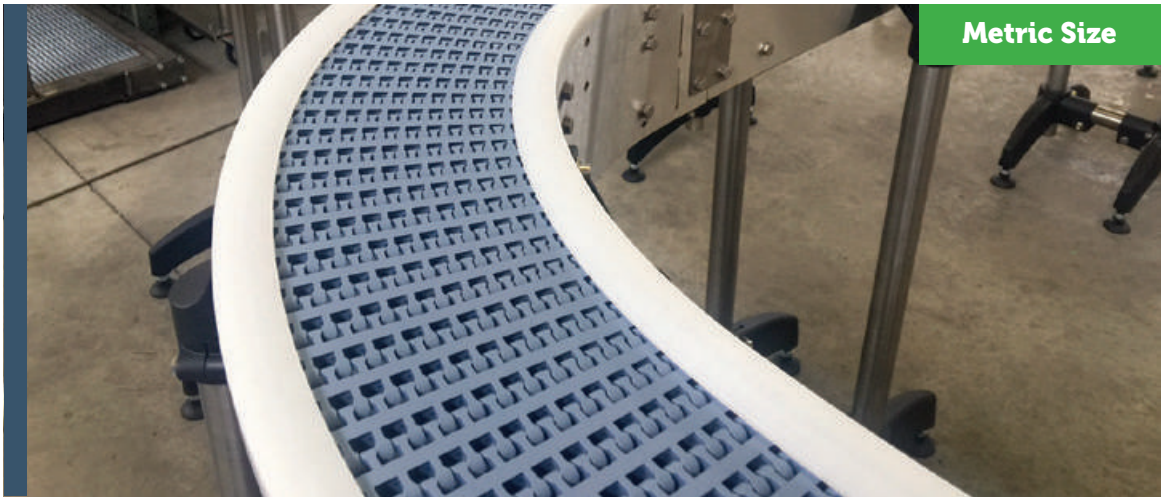

556 FT
556 GT

Movex®

Imperial Size

556 FT

Tappeto Modulare Curvilineo Serie 556, H=12,7 M=3"
Side Flex Modular Belt Series 556, H=12,7 M=3" / Kurvengängige Mattenkette Serie 556, H=12,7 M=3"

CODE STRUCTURE GUIDE (Example)			
5431	01	0006	C
Series	*Material	Width	Version

pg. 280 | pg. 516->524 | pg. 494

Backflex radius min.: 25 mm

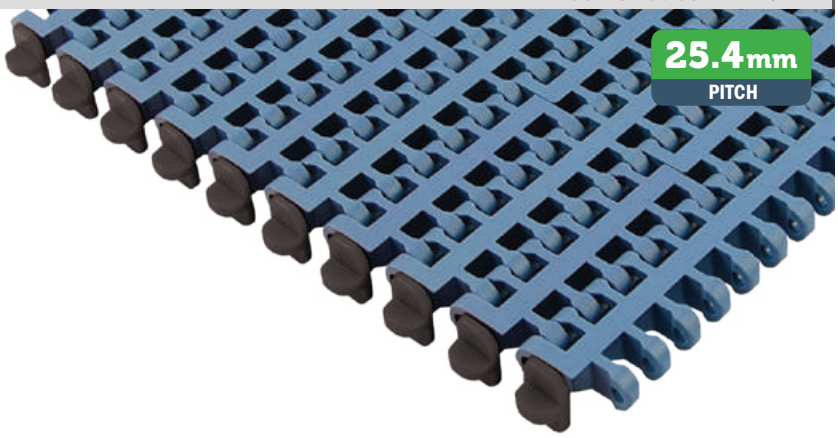

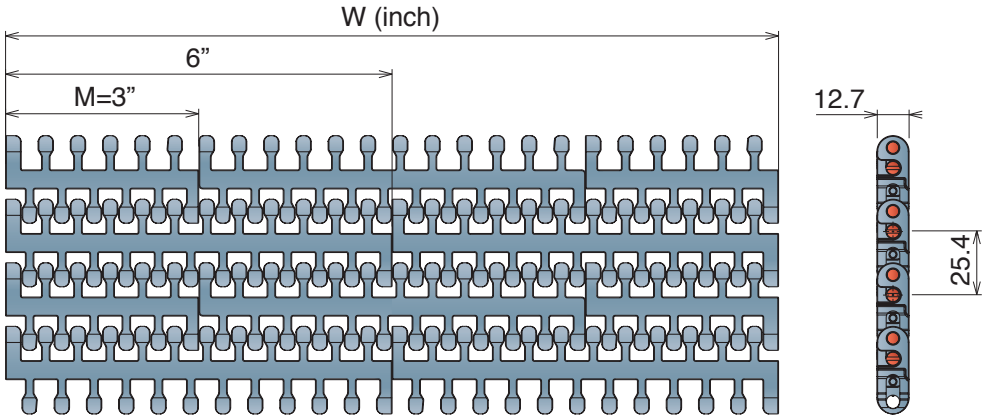

*Material

LFA - Code 01
Low friction Acetal

Max w. load:
Straight: 30000 N/m
Curve 2000 N
Weight: 7,5 kg/m²
Temp. range dry: -40÷80 °C
Temp. range wet: -40÷65 °C
Pin material: PBT white

LFB - Code 23
Low friction Acetal

Max w. load:
Straight: 30000 N/m
Curve 2000 N
Weight: 7,5 kg/m²
Temp. range dry: -40÷80 °C
Temp. range wet: -40÷65 °C
Pin material: PBT white

PPB - Code 24
Polypropylene

Max w. load:
Straight: 19500 N/m
Curve 1300 N
Weight: 5,8 kg/m²
Temp. range dry: 4÷65 °C
Temp. range wet: 4÷65 °C
Pin material: PP blu

THE BEST CHOICE FOR FOOD CONTACT APPLICATION

STANDARD

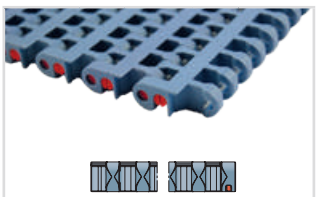

Series	Material	Width	Version	min radius
5431	*	0009	A	435
5431	*	0012	A	580
5431	*	0015	A	725
5431	*	0018	A	890
5431	*	0021	A	1040
5431	*	0024	A	1250

ONE TRACK BELT

Series	Material	Width	Version	min radius
5431	*	0003	A	145
5431	*	0006	A	290

TAB

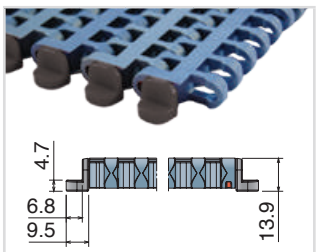

Series	Material	Width	Version	min radius
5431	*	0009	B	435
5431	*	0012	B	580
5431	*	0015	B	725
5431	*	0018	B	890
5431	*	0021	B	1040
5431	*	0024	B	1250

ONE TRACK BELT

Series	Material	Width	Version	min radius
5431	*	0003	B	145
5431	*	0006	B	290

TAB/POSITIONER

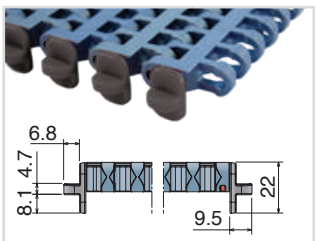

Series	Material	Width	Version	min radius
5431	*	0009	C	435
5431	*	0012	C	580
5431	*	0015	C	725
5431	*	0018	C	890
5431	*	0021	C	1040
5431	*	0024	C	1250

ONE TRACK BELT

Series	Material	Width	Version	min radius
5431	*	0003	C	145
5431	*	0006	C	290

556 GT

Tappeto Modulare Curvilineo Serie 556 GT, H=12,7 M=3”
Side Flex Modular Belt Series 556 GT, H=12,7 M=3” / Kurvengängige Mattenkette Serie 556 GT, H=12,7 M=3”

CODE STRUCTURE GUIDE (Example)			
5433	01	0018	B
Series	*Material	Width	Version

pg. 280 | pg. 516->524 | pg. 494

Backflex radius min.: 25 mm

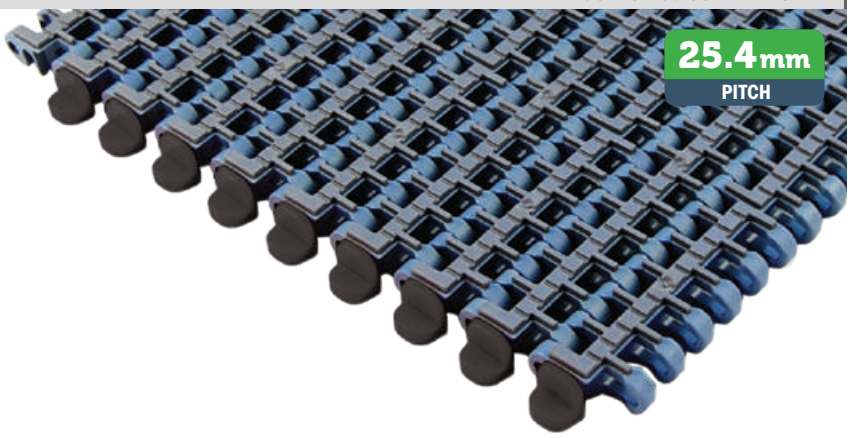

*Material

LFA - Code 01
Low friction Acetal

Max w. load:	
Straight:	30000 N/m
Curve	2000 N
Weight:	7,7 kg/m²
Temp. range dry:	-40÷80 °C
Temp. range wet:	-40÷65 °C
Pin material:	PBT white
Hardness of Grip top Rubber:	75 ShA

LFB - Code 23
Low friction Acetal

Max w. load:	
Straight:	30000 N/m
Curve	2000 N
Weight:	7,7 kg/m²
Temp. range dry:	-40÷80 °C
Temp. range wet:	-40÷65 °C
Pin material:	PBT white
Hardness of Grip top Rubber:	75 ShA

PPB - Code 24
Polypropylene
Standard rubber: 50 ShA
Code: -S

Max w. load:	
Straight:	19500 N/m
Curve	1300 N
Weight:	5,8 kg/m²
Temp. range dry:	4÷65 °C
Temp. range wet:	4÷65 °C
Pin material:	PP blu
Hardness of Grip top Rubber:	50 ShA

THE BEST CHOICE FOR FOOD CONTACT APPLICATION

Available also with 50 ShA Rubber

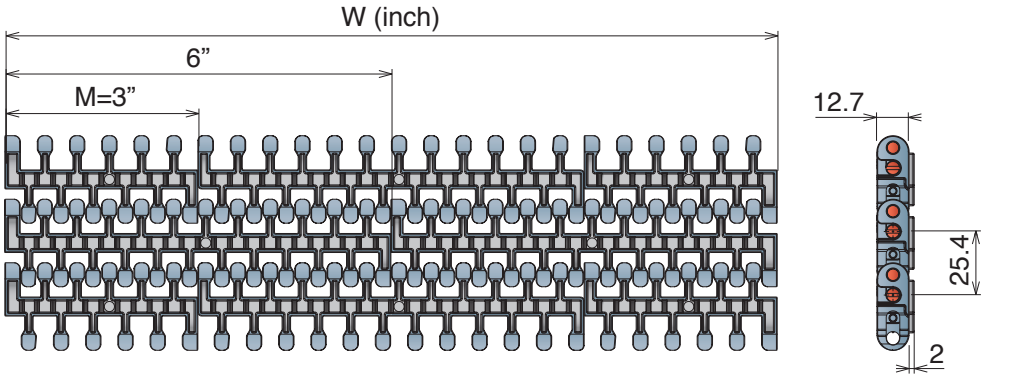

STANDARD

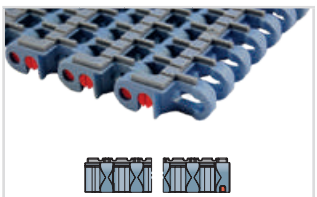

Series	Material	Width	Version	min radius
5433	*	0009	A	435
5433	*	0012	A	580
5433	*	0015	A	725
5433	*	0018	A	890
5433	*	0021	A	1040
5433	*	0024	A	1250

ONE TRACK BELT

Series	Material	Width	Version	min radius
5433	*	0003	A	145
5433	*	0006	A	290

TAB

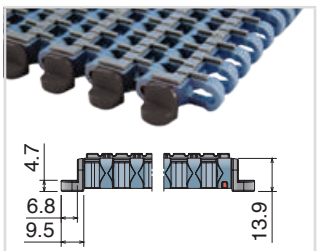

Series	Material	Width	Version	min radius
5433	*	0009	B	435
5433	*	0012	B	580
5433	*	0015	B	725
5433	*	0018	B	890
5433	*	0021	B	1040
5433	*	0024	B	1250

ONE TRACK BELT

Series	Material	Width	Version	min radius
5433	*	0003	B	145
5433	*	0006	B	290

TAB/POSITIONER

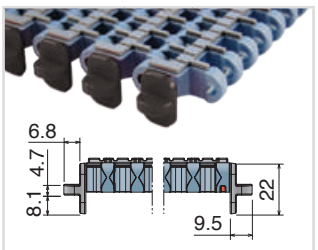

Series	Material	Width	Version	min radius
5433	*	0009	C	435
5433	*	0012	C	580
5433	*	0015	C	725
5433	*	0018	C	890
5433	*	0021	C	1040
5433	*	0024	C	1250

ONE TRACK BELT

Series	Material	Width	Version	min radius
5433	*	0003	C	145
5433	*	0006	C	290

600

Pitch 31,75 mm
H= 12,7 mm

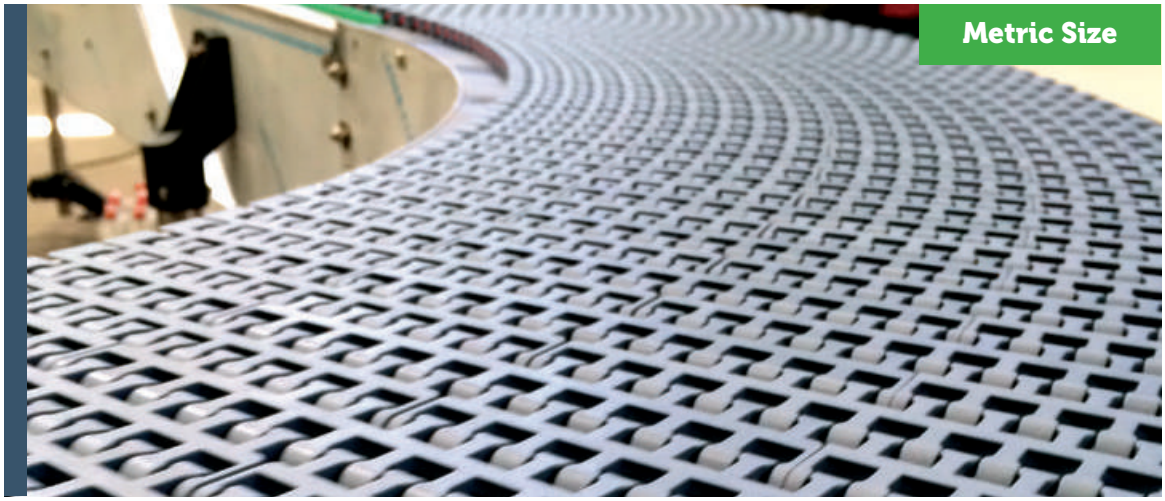

- 600 *Standard*
- 600 *Heavy duty*
- 600 *Heavy duty with Bearings*
- 600 *Small radius*
- 600 *Heavy duty/Small radius*
- 600 *Heavy duty/Small radius with Bearings*
- 600 *with pusher*
- 1047 *Heavy duty guide*

Movex®

600 Standard

Tappeto Modulare Curvilineo Serie 600, H=12,7 M=85

Side Flex Modular Belt Series 600, H=12,7 M=85 / Kurvengängige Mattenkette Serie 600, H=12,7 M=85

CODE STRUCTURE GUIDE (Example)			
5421	01	0595	A
Series	*Material	Width	Version

pg. 283 | pg. 516->524 | pg. 495

Backflex radius min.: 25 mm

31.75 mm PITCH

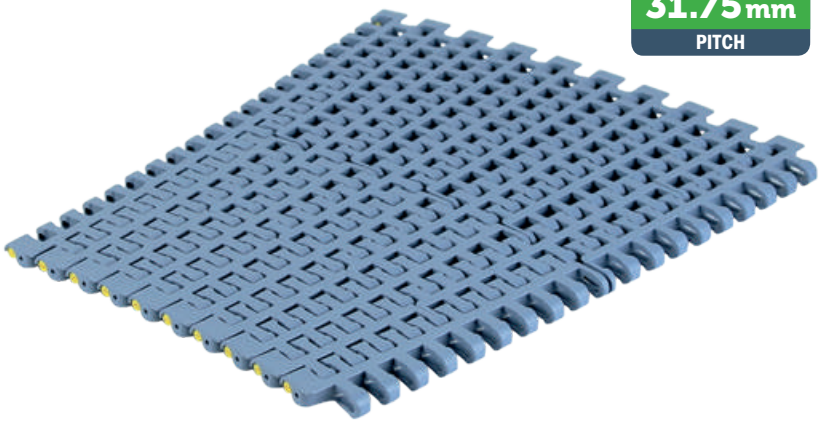

Improved Design and Performance

*Material

LFA - Code 01
Low friction Acetal

Max w. load:	
Straight	30000 N/m
Curve	2500 N
Weight:	7,7 kg/m²
Temp. range dry:	-40÷80 °C
Temp. range wet:	-40÷65 °C
Pin material:	PBT white

LFB - Code 23
Low friction Acetal

Max w. load:	
Straight	30000 N/m
Curve	2500 N
Weight:	7,7 kg/m²
Temp. range dry:	-40÷80 °C
Temp. range wet:	-40÷65 °C
Pin material:	PBT white

Internal Min Radius
2 times the width

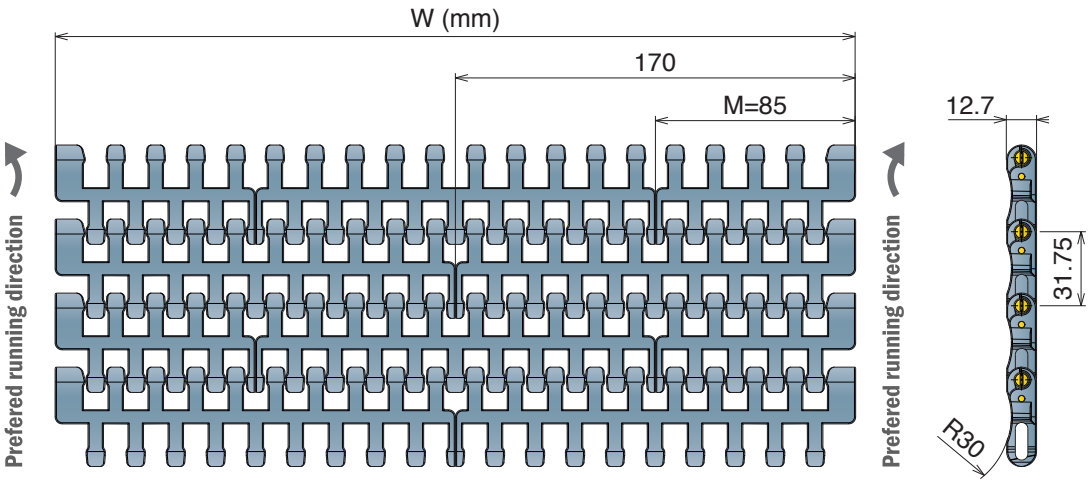

STANDARD



Series	Material	Width	Version	min radius
5421	*	0255	A	510
5421	*	0340	A	680
5421	*	0425	A	850
5421	*	0510	A	1020
5421	*	0595	A	1190
5421	*	0680	A	1360
5421	*	0765	A	1530
5421	*	0850	A	1700

TAB

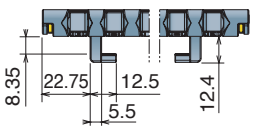

Series	Material	Width	Version	min radius
5421	*	0255	B	510
5421	*	0340	B	680
5421	*	0425	B	850
5421	*	0510	B	1020
5421	*	0595	B	1190
5421	*	0680	B	1360
5421	*	0765	B	1530
5421	*	0850	B	1700

REVERSE TAB

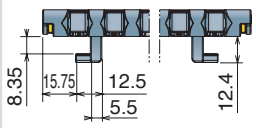

Series	Material	Width	Version	min radius
5421	*	0255	C	510
5421	*	0340	C	680
5421	*	0425	C	850
5421	*	0510	C	1020
5421	*	0595	C	1190
5421	*	0680	C	1360
5421	*	0765	C	1530
5421	*	0850	C	1700

TAB REVERSE TAB

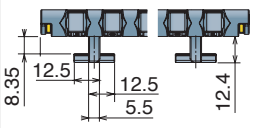

Series	Material	Width	Version	min radius
5421	*	0255	D	510
5421	*	0340	D	680
5421	*	0425	D	850
5421	*	0510	D	1020
5421	*	0595	D	1190
5421	*	0680	D	1360
5421	*	0765	D	1530
5421	*	0850	D	1700

600 Heavy duty

Tappeto Modulare Curvilineo Serie 600, H=12,7 M=85

Side Flex Modular Belt Series 600, H=12,7 M=85 / Kurvengängige Mattenkette Serie 600, H=12,7 M=85

CODE STRUCTURE GUIDE (Example)			
5422	01	0340	E
Series	*Material	Width	Version

pg. 283 | pg. 516->524 | pg. 496-497

Backflex radius min.: 25 mm

31.75 mm PITCH

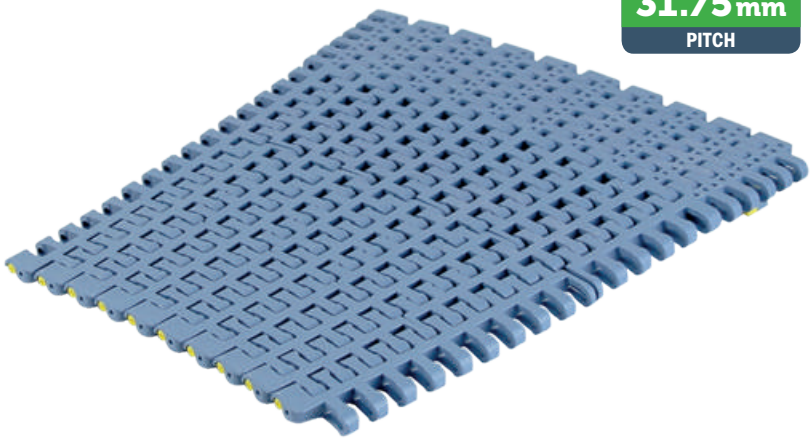

Improved Design and Performance

***Material**

LFA - Code 01
Low friction Acetal

Max w. load:	
Straight	30000 N/m
Curve	3500 N
Weight:	8,3 kg/m²
Temp. range dry:	-40÷80 °C
Temp. range wet:	-40÷65 °C
Pin material:	PBT white

LFB - Code 23
Low friction Acetal

Max w. load:	
Straight	30000 N/m
Curve	3500 N
Weight:	8,3 kg/m²
Temp. range dry:	-40÷80 °C
Temp. range wet:	-40÷65 °C
Pin material:	PBT white

Internal Min Radius
2 times the width

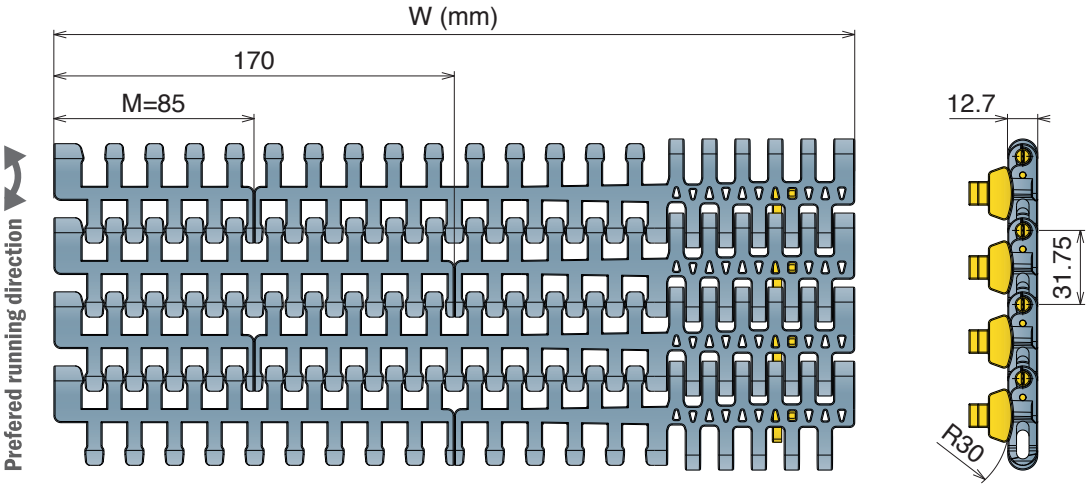

STANDARD

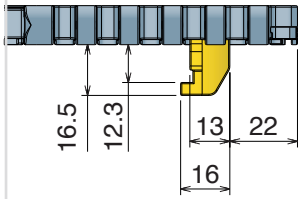

Series	Material	Width	Version	min radius
5422	*	0340	E	680
5422	*	0425	E	850
5422	*	0510	E	1020
5422	*	0595	E	1190
5422	*	0680	E	1360
5422	*	0765	E	1530
5422	*	0850	E	1700

TAB DKM Material

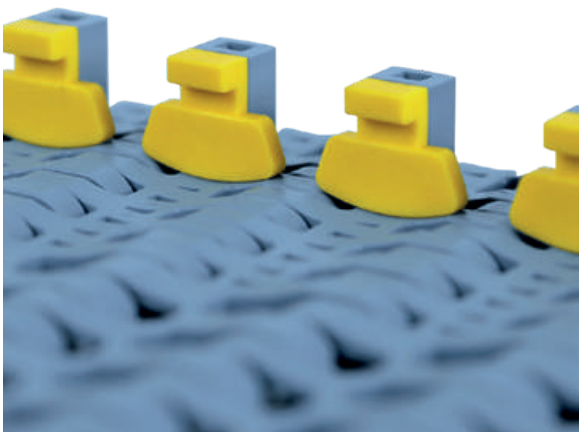

600 Heavy duty with Bearings

Tappeto Modulare Curvilineo Serie 600, H=12,7 M=85

Side Flex Modular Belt Series 600, H=12,7 M=85 / Kurvengängige Mattenkette Serie 600, H=12,7 M=85

CODE STRUCTURE GUIDE (Example)			
5422	01	0340	F
Series	*Material	Width	Version

pg. 283 | pg. 516->524 | pg. 498-499

Backflex radius min.: 25 mm

31.75 mm PITCH

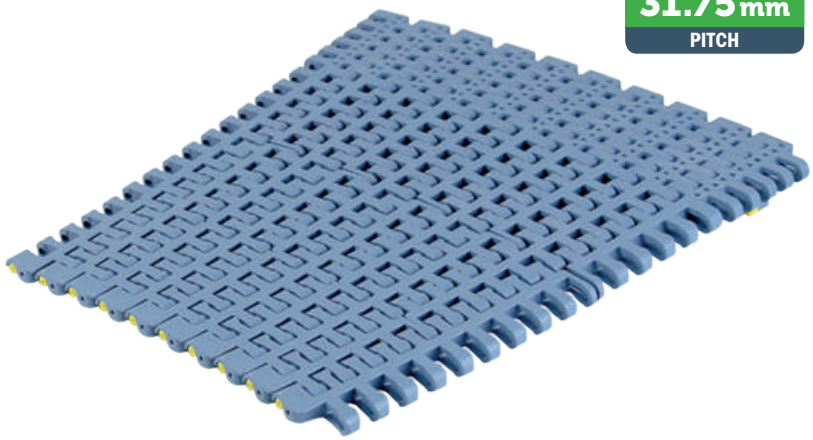

Improved Design and Performance

***Material**

LFA - Code 01
Low friction Acetal

Max w. load:	
Straight	30000 N/m
Curve	3500 N
Weight:	9,0 kg/m²
Temp. range dry:	-40÷80 °C
Temp. range wet:	-40÷65 °C
Pin material:	PBT white

LFB - Code 23
Low friction Acetal

Max w. load:	
Straight	30000 N/m
Curve	3500 N
Weight:	9,0 kg/m²
Temp. range dry:	-40÷80 °C
Temp. range wet:	-40÷65 °C
Pin material:	PBT white

Internal Min Radius
2 times the width

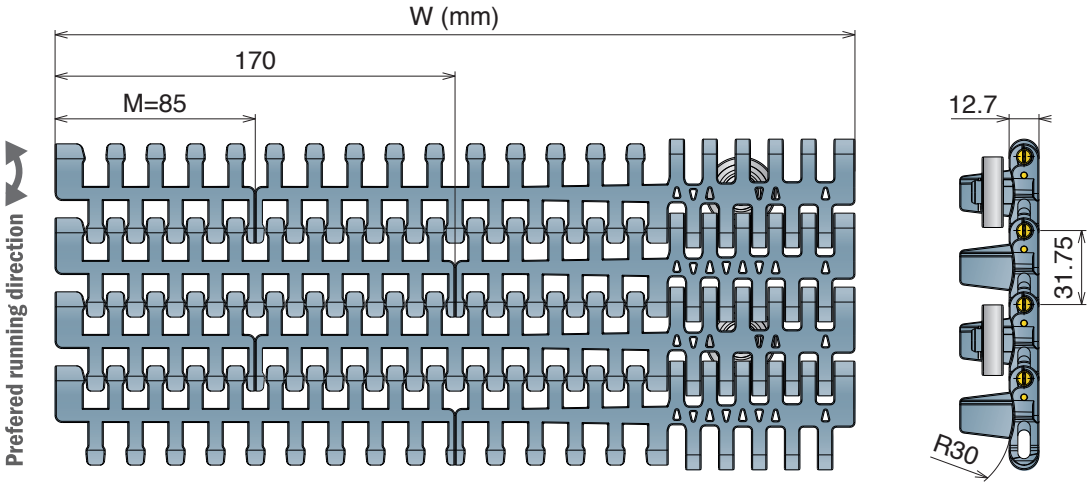

STANDARD

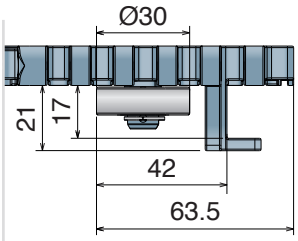

Series	Material	Width	Version	min radius
5422	*	0340	F	680
5422	*	0425	F	850
5422	*	0510	F	1020
5422	*	0595	F	1190
5422	*	0680	F	1360
5422	*	0765	F	1530
5422	*	0850	F	1700

Bearing Zoom

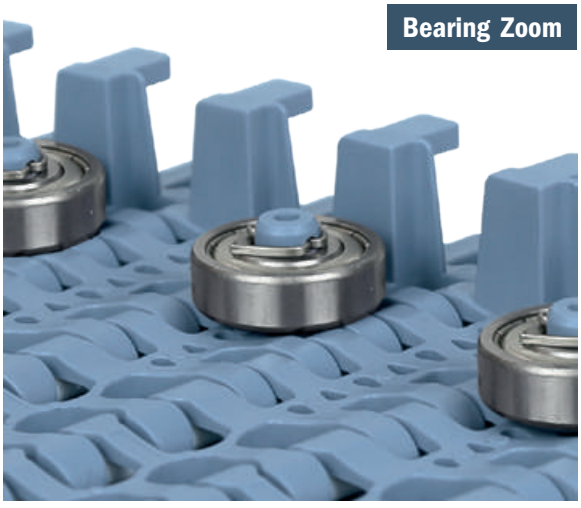

600 Small radius

Tappeto Modulare Curvilineo Serie 600, H=12,7 M=85

Side Flex Modular Belt Series 600, H=12,7 M=85 / Kurvengängige Mattenkette Serie 600, H=12,7 M=85

CODE STRUCTURE GUIDE (Example)			
5423	01	0340	A
Series	*Material	Width	Version

Backflex radius min.: 25 mm

31.75 mm PITCH



pg. 283 | pg. 516->524 | pg. 500-501

Improved Design and Performance

***Material**

LFA - Code 01
Low friction Acetal

Max w. load:	
Straight	30000 N/m
Curve	2500 N
Weight:	7,0 kg/m²
Temp. range dry:	-40÷80 °C
Temp. range wet:	-40÷65 °C
Pin material:	PBT white

LFB - Code 23
Low friction Acetal

Max w. load:	
Straight	30000 N/m
Curve	2500 N
Weight:	7,0 kg/m²
Temp. range dry:	-40÷80 °C
Temp. range wet:	-40÷65 °C
Pin material:	PBT white

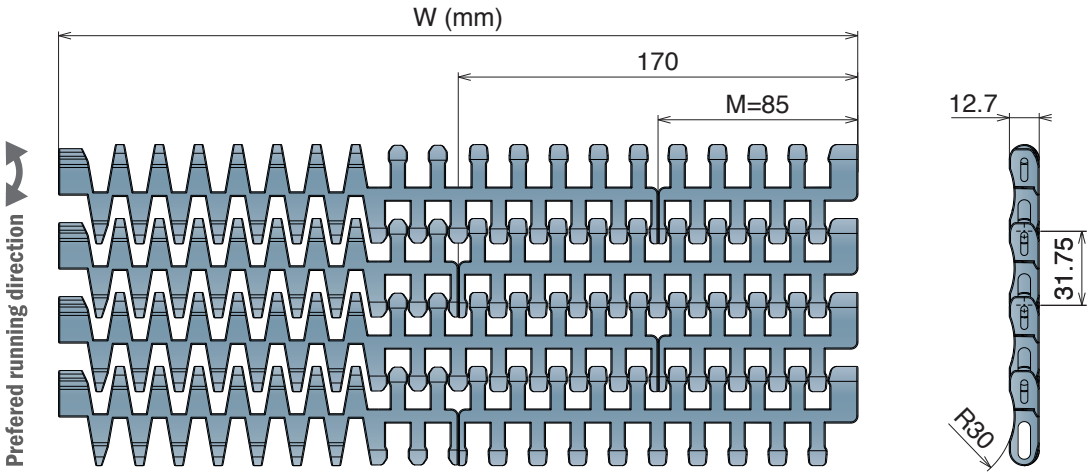

STANDARD

Series	Material	Width	Version	min radius
5423	*	0340	A	400
5423	*	0425	A	500
5423	*	0510	A	600
5423	*	0595	A	720
5423	*	0680	A	880
5423	*	0765	A	1040
5423	*	0850	A	1200

TAB

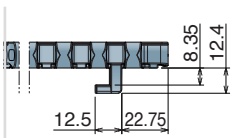

Series	Material	Width	Version	min radius
5423	*	0340	B	400
5423	*	0425	B	500
5423	*	0510	B	600
5423	*	0595	B	720
5423	*	0680	B	880
5423	*	0765	B	1040
5423	*	0850	B	1200

REVERSE TAB

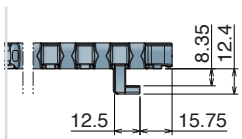

Series	Material	Width	Version	min radius
5423	*	0340	C	400
5423	*	0425	C	500
5423	*	0510	C	600
5423	*	0595	C	720
5423	*	0680	C	880
5423	*	0765	C	1040
5423	*	0850	C	1200

TAB REVERSE TAB

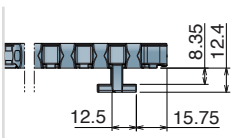

Series	Material	Width	Version	min radius
5423	*	0340	D	400
5423	*	0425	D	500
5423	*	0510	D	600
5423	*	0595	D	720
5423	*	0680	D	880
5423	*	0765	D	1040
5423	*	0850	D	1200

600 Heavy duty/Small radius

Tappeto Modulare Curvilineo Serie 600, H=12,7 M=170

Side Flex Modular Belt Series 600, H=12,7 M=170 / Kurvengängige Mattenkette Serie 600, H=12,7 M=170

CODE STRUCTURE GUIDE (Example)			
5424	01	0425	E
Series	*Material	Width	Version

pg. 283 | pg. 516->524 | pg. 502-503

Backflex radius min.: 25 mm

31.75 mm PITCH

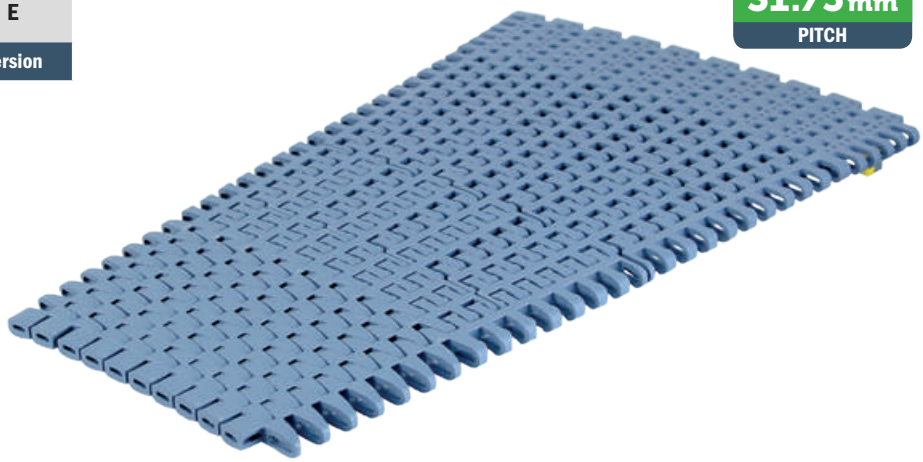

Improved Design and Performance

*Material

LFA - Code 01
Low friction Acetal

Max w. load:	
Straight	30000 N/m
Curve	3500 N
Weight:	7,5 kg/m²
Temp. range dry:	-40÷80 °C
Temp. range wet:	-40÷65 °C
Pin material:	PBT white

LFB - Code 23
Low friction Acetal

Max w. load:	
Straight	30000 N/m
Curve	3500 N
Weight:	7,5 kg/m²
Temp. range dry:	-40÷80 °C
Temp. range wet:	-40÷65 °C
Pin material:	PBT white

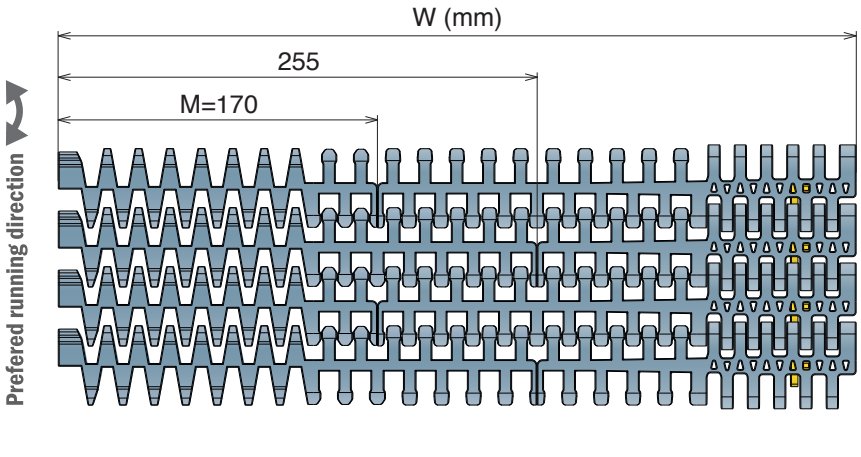

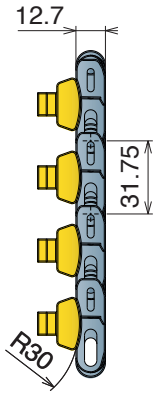

STANDARD

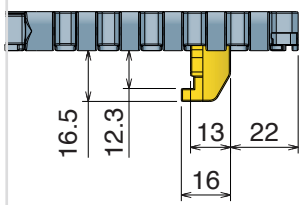

Series	Material	Width	Version	min radius
5424	*	0425	E	500
5424	*	0510	E	600
5424	*	0595	E	720
5424	*	0680	E	880
5424	*	0765	E	1040
5424	*	0850	E	1200

TAB DKM Material

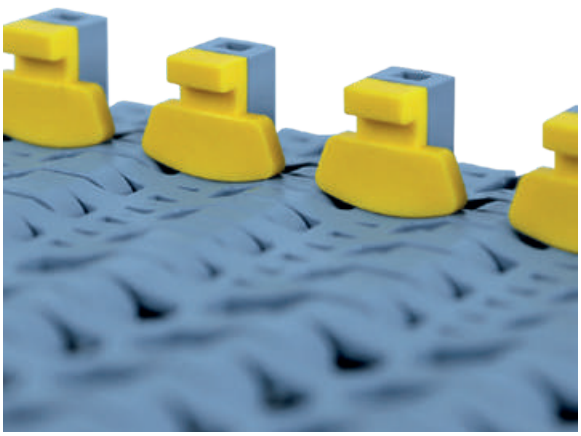

600 Heavy duty/Small radius with Bearings

Tappeto Curvilineo Serie 600, H=12,7 M=170

Side Flex Modular Belt Series 600, H=12,7 M=170 / Kurvengängige Mattenkette Serie 600, H=12,7 M=170

Metric Size

CODE STRUCTURE GUIDE (Example)			
5424	01	0425	F
Series	*Material	Width	Version

Backflex radius min.: 25 mm

pg. 283 | pg. 516->524 | pg. 504-505

31.75 mm PITCH

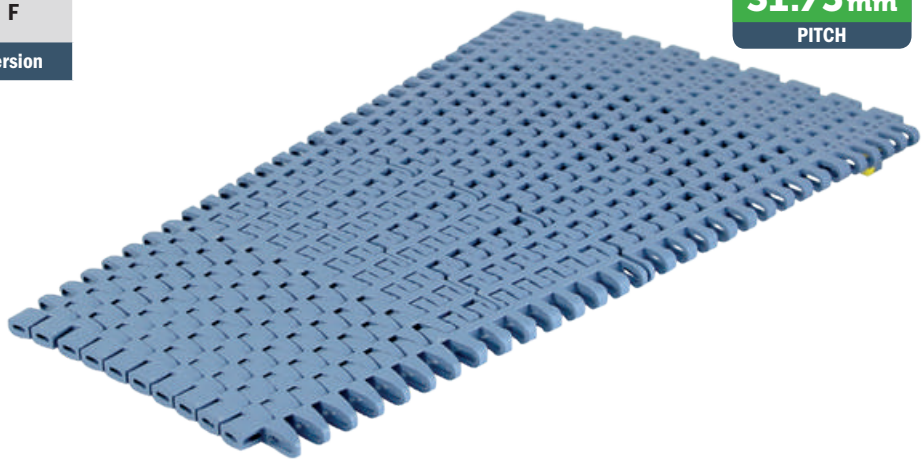

Improved Design and Performance

*Material

LFA - Code 01
Low friction Acetal

Max w. load:	
Straight	30000 N/m
Curve	3500 N
Weight:	8,5 kg/m²
Temp. range dry:	-40÷80 °C
Temp. range wet:	-40÷65 °C
Pin material:	PBT white

LFB - Code 23
Low friction Acetal

Max w. load:	
Straight	30000 N/m
Curve	3500 N
Weight:	8,5 kg/m²
Temp. range dry:	-40÷80 °C
Temp. range wet:	-40÷65 °C
Pin material:	PBT white

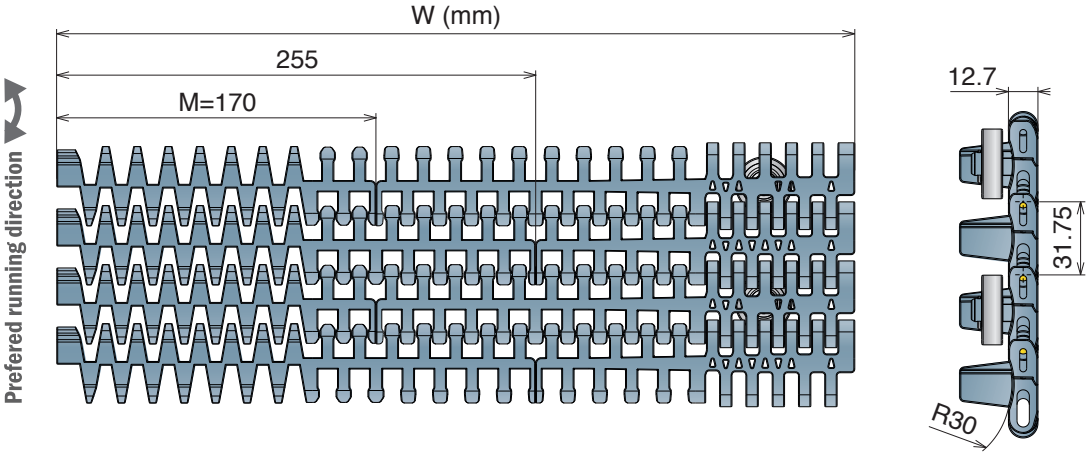

STANDARD

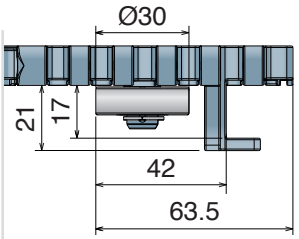

Series	Material	Width	Version	min radius
5424	*	0425	F	500
5424	*	0510	F	600
5424	*	0595	F	720
5424	*	0680	F	880
5424	*	0765	F	1040
5424	*	0850	F	1200

Bearing Zoom

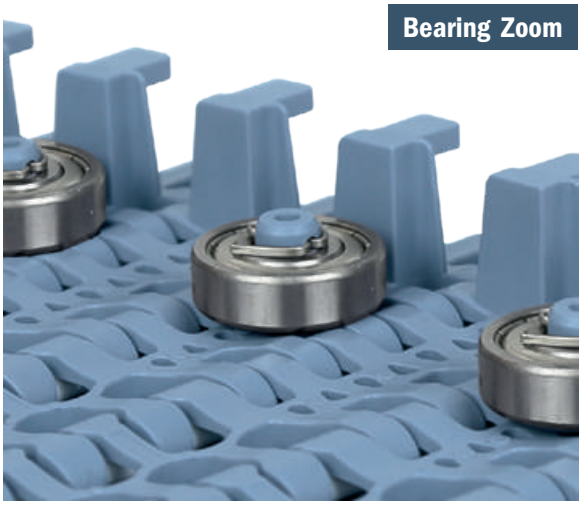

600 *with pusher*

Tappeto Modulare Curvilineo Serie 600, H=12,7 M=85
Side Flex Modular Belt Series 600, H=12,7 M=85 / Kurvengängige Mattenkette Serie 600, H=12,7 M=85

31.75 mm
PITCH

pg. 283
pg. 516->524

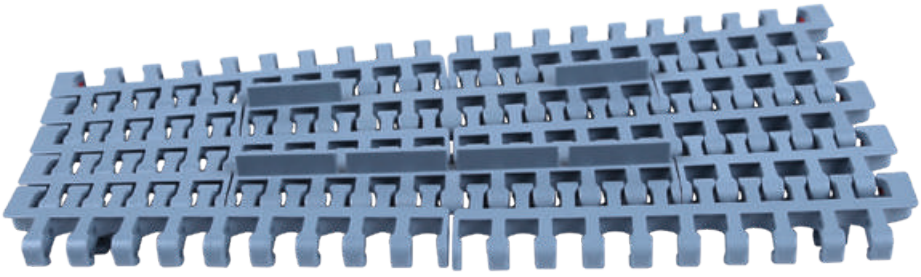

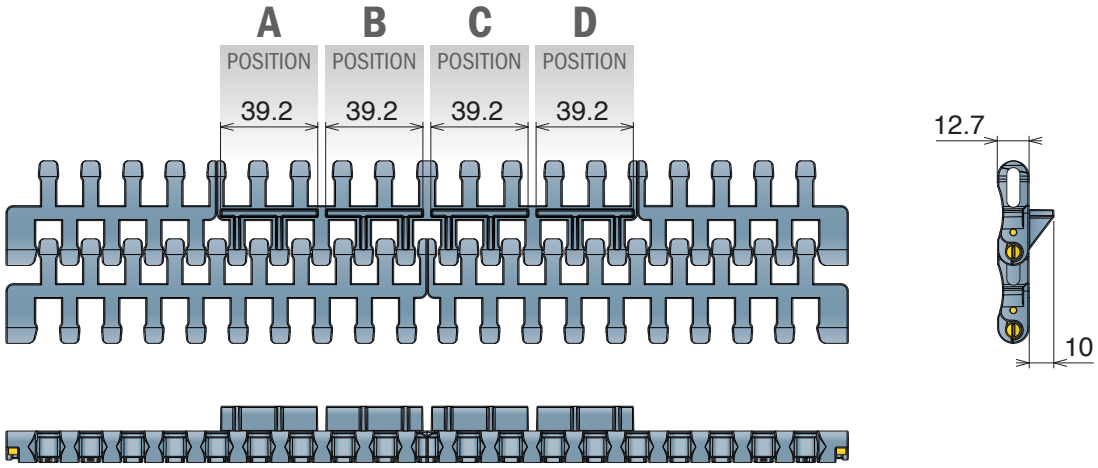

The pusher is applicable only for the center module, and there are available up to a maximum of 4 positions (**A**-**B**-**C**-**D**) or with different types of combinations (example **A**-**B**-**D** / **A**-**C** / **B**-**C**-**D**).

Consult our engineering department for details.

1047

Guida tappeto
Belt side guide / Seitenführung für Mattenkette

Part	Article-Nr.	Material	Width
1047	104700BC	BluLub	3 m



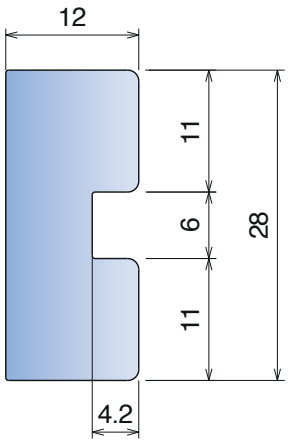

Material: Polyethylene UHMW-PE with moleculardensity 9,200,000 g/mo.

BluLub *new material with reduced coefficient of friction and higher wear resistence. BluLub complies with the code of Federal Regulations of FDA. Linear expansion coefficient: 1.1x10⁻⁴ °F⁻¹ (2x10⁻⁴ °C⁻¹) Operating temperature: -40 to 176°F (-40 to +80°C)*

500

Pitch 50,8 mm
H= 24 mm

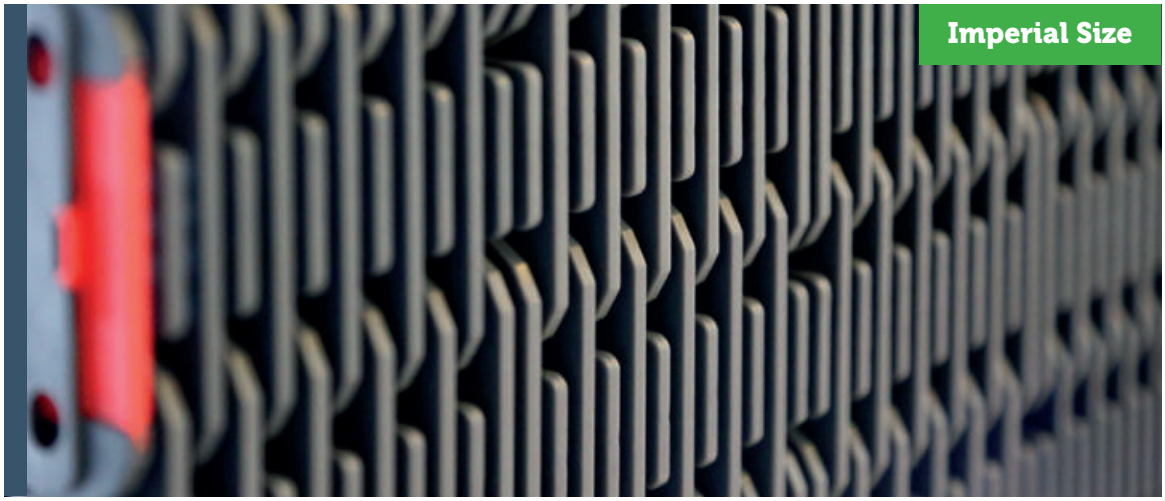

500 RR
389 *Combs*

500 RR

Tappeto Modulare 500 RR
Raised Rib Belt Series 500 RR / Modulare Mattenkette 500 RR

CODE STRUCTURE GUIDE		
(Example)		
1348	11	0090
Series	*Material	Width

pg. 286-267 | pg. 516->524 | pg. 484

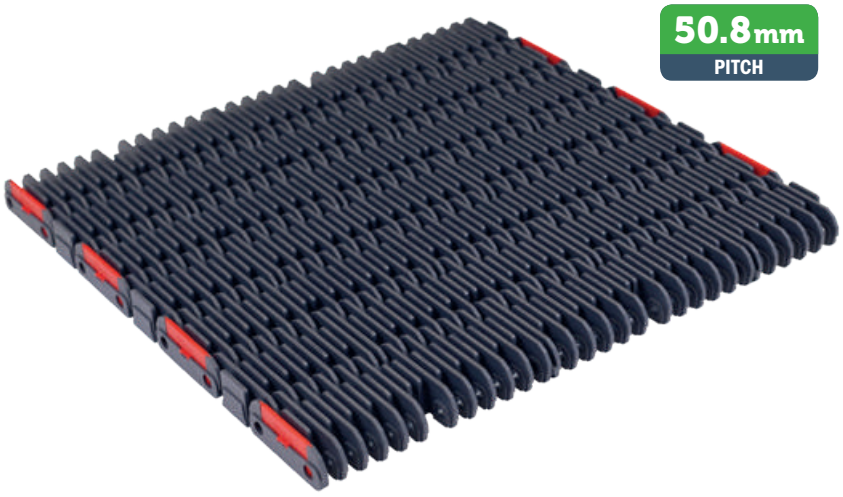

*Material			
PP - Code 02 *Polypropylene*		**PPX - Code 11** *Polypropylene*	
Max w. load:	30000 N/m	**Max w. load:**	30000 N/m
Weight:	10,65 kg/m²	**Weight:**	10,65 kg/m²
Temp. range:	4÷104 °C	**Temp. range:**	4÷104 °C
Pin material:	PP grey	**Pin material:**	PP grey

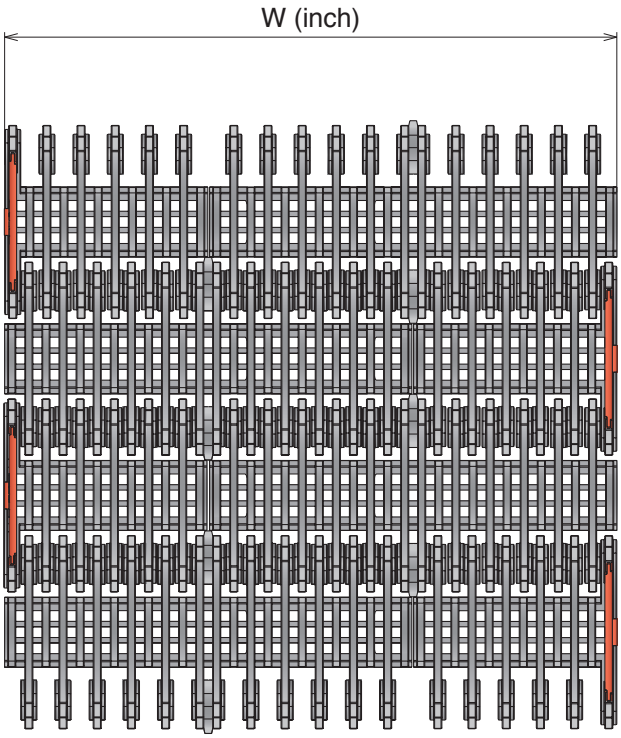

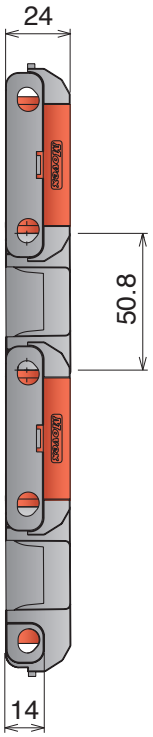

Series	Material	Width
1348	*	0060
1348	*	0063
1348	*	0066
1348	*	0069
1348	*	0072
1348	*	0075
1348	*	0078
1348	*	0081
1348	*	0084
1348	*	0087
1348	*	0090

Series	Material	Width
1348	*	0093
1348	*	0096
1348	*	0099
1348	*	0102
1348	*	0105
1348	*	0108
1348	*	0111
1348	*	0114
1348	*	0117
1348	*	0120

Materiale / *Material / Materialien:*
Resina acetalica/*Acetal resin/Azetal*
Vite: Acciaio inox/*Screw: Stainless steel/Schraube: Edelstahl*

389 Pettine
Combs / Fingerplatte



Screw info

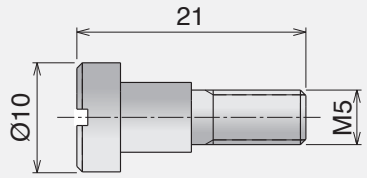

X 2 Included

Type A

Part	Article-Nr.
389	38901

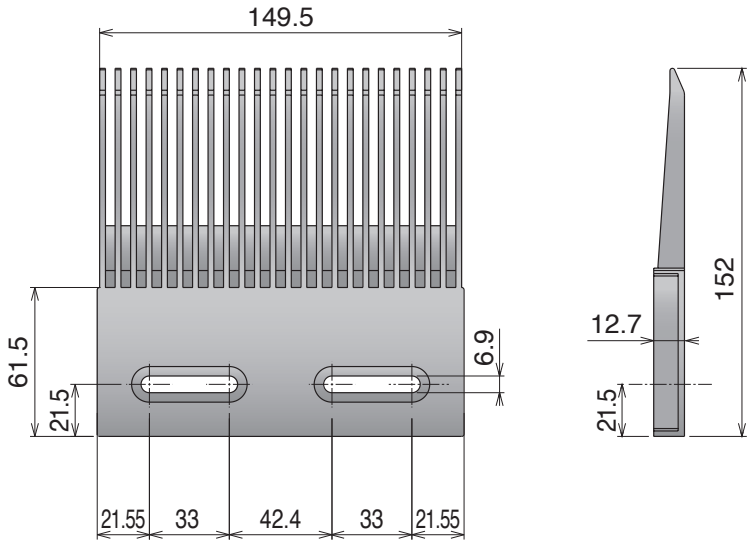

Type B

Part	Article-Nr.
389	38902

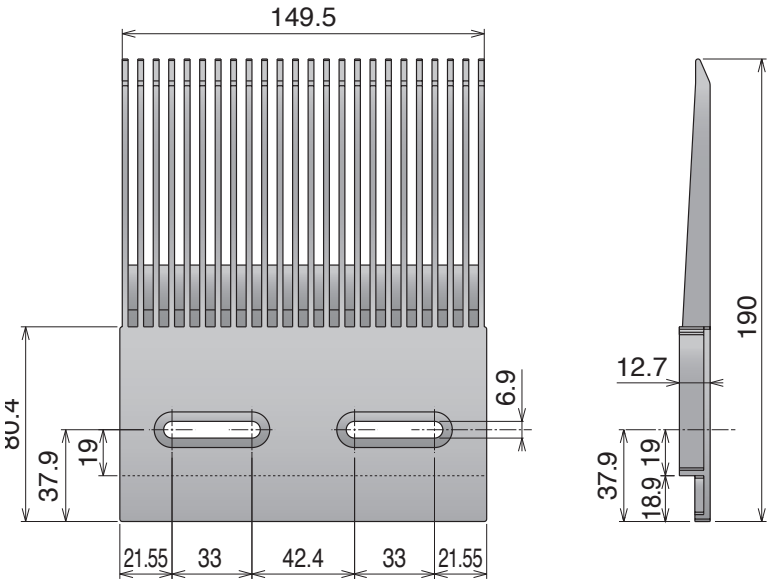

ZERO 520 CONTACT

H= 10,1 mm

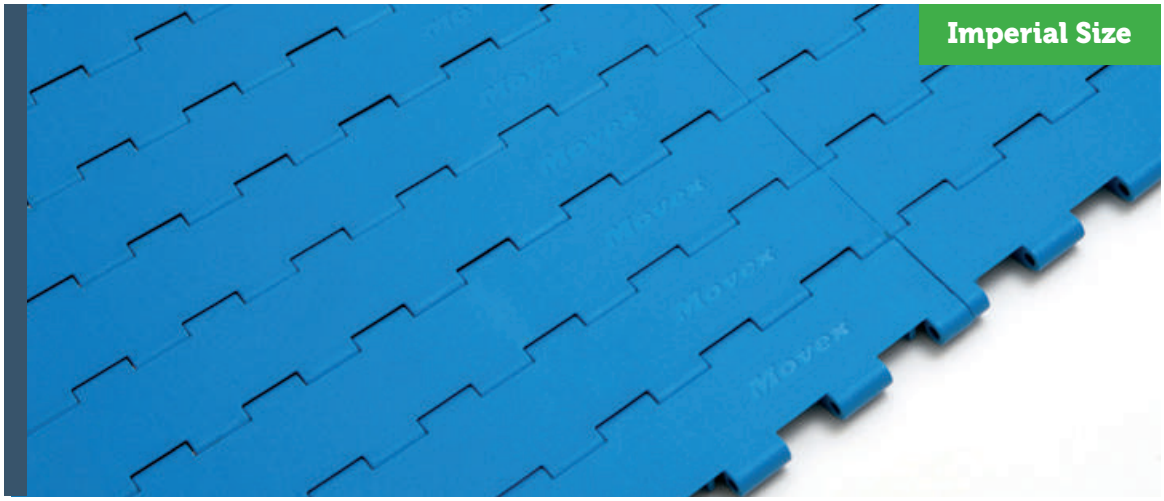

ZERO CONTACT
ZERO CONTACT PRO
ZERO CONTACT CURVE

Movex®

ZERO CONTACT

Tappeto Modulare Curvilineo Zero Contact ™, H=10,1 M=200

Side Flex Modular Belt Zero Contact ™, H=10,1 M=200 / Kurvengängige Mattenkette Zero Contact ™, H=10,1 M=200

pg. 284 | pg. 516->524 | pg. 507

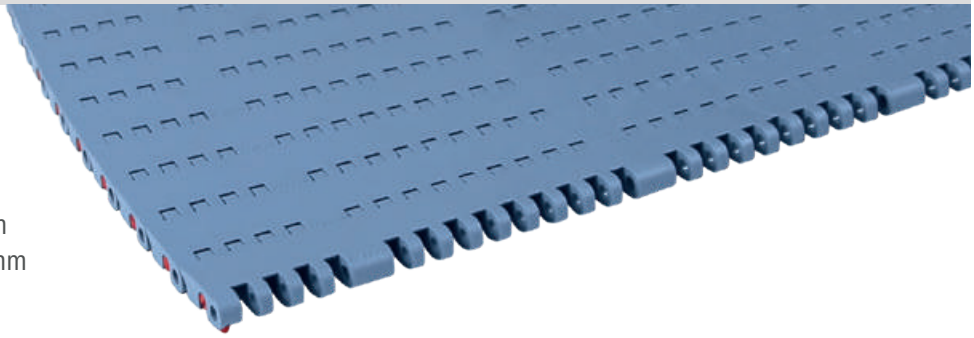

Minimum width available: 200 mm
Maximum width available: 1000 mm
(increments of 200 mm)

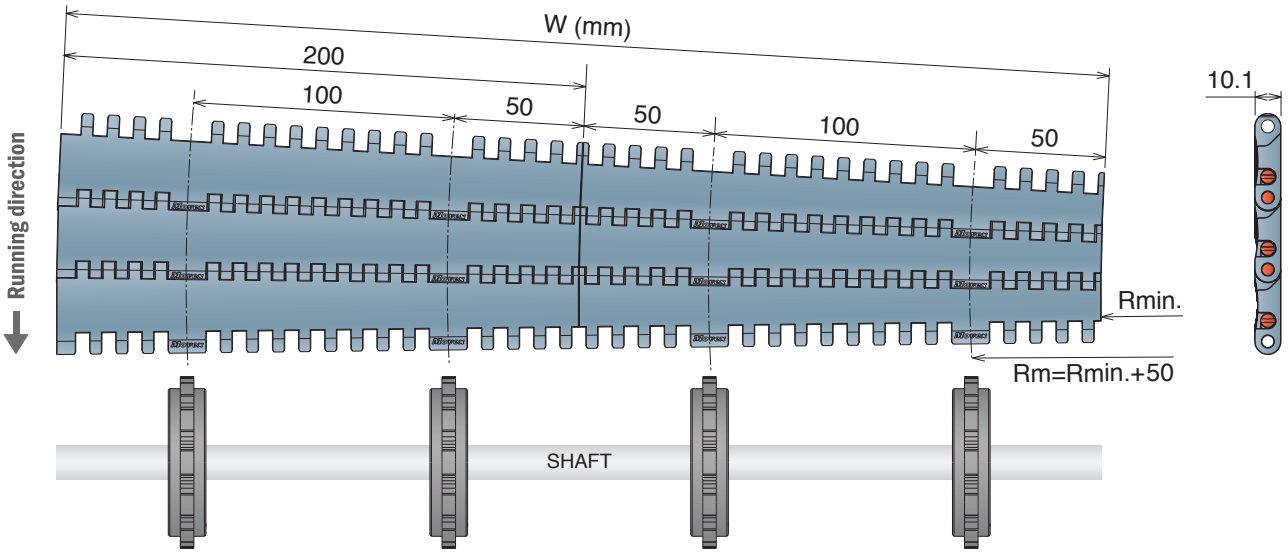

***Material**

LFA
Low friction Acetal

Max w. load:	13500 N/m
Weight:	9,25 kg/m²
Temp. range dry:	-40÷80 °C
Temp. range wet:	-40÷65 °C
Pin:	PBT white

Side Flex Modular Belt Zero Contact ™ 90° | Lenght of the belt 150 Modules

Part	Belt Width (mm)	Rmin. 600	Rmin. 800	Rmin. 1000	Rmin. 1200	Rmin. 1400
545	200	5451010201A	5451010202A	5451010203A	5451010204A	5451010205A
545	400	5451010401A	5451010402A	5451010403A	5451010404A	-
545	600	5451010601A	5451010602A	5451010603A	-	-
545	800	5451010801A	5451010802A	-	-	-
545	1000	5451011001A	-	-	-	-

Side Flex Modular Belt Zero Contact ™ 180° | Lenght of the belt 300 Modules

Part	Belt Width (mm)	Rmin. 600	Rmin. 800	Rmin. 1000	Rmin. 1200	Rmin. 1400
545	200	5452010201A	5452010202A	5452010203A	5452010204A	5452010205A
545	400	5452010401A	5452010402A	5452010403A	5452010404A	-
545	600	5452010601A	5452010602A	5452010603A	-	-
545	800	5452010801A	5452010802A	-	-	-
545	1000	5452011001A	-	-	-	-

Technical specification

Material of the modules: LFA Low friction acetal
Color of the modules: Pigeon Blue
Open Area: 0%
Pin: D4,7 mm, PBT White
Max belt speed: 70 m/min on middle radius
Row to row angle: 1.33°

ZERO CONTACT PRO

Tappeto Modulare Curvilineo Zero Contact PRO, H=9

Side Flex Modular Belt Zero Contact PRO, H=9 / Kurvengängige Mattenkette Zero Contact PRO, H=9

pg. 285 pg. 516->524 pg. 508->514

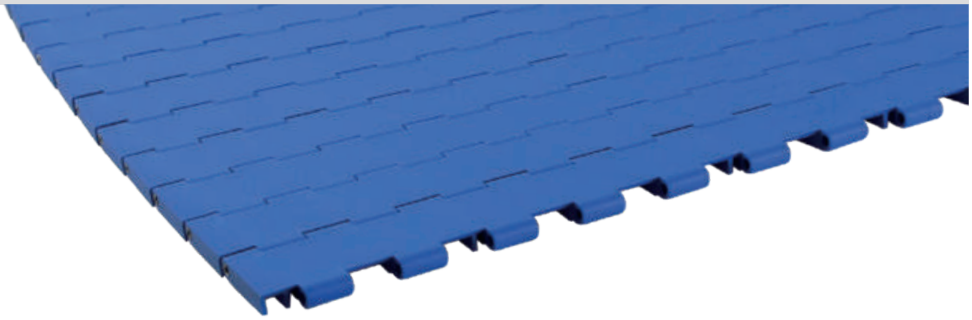



Based on our Zero Contact belt, **Movex®** decided to introduce ***Zero Contact PRO,*** a reinforced version designed specifcally for heavy applications.

This innovative design is especially recommended for high speed, heavy loads and transportation of abrasive substances, like sand, salt, sugar, and many other applications.

The stainless steel pins guarantee a higher working load, and due to the new pin retention with grub screw, this permits a strong assembling of the belt.

The robust structure of ***Zero Contact PRO*** can be summarized in minimal maintenance, long life expectation and high reliability.



Zero Contact PRO is a surprisingly versatile belt, allowing a wider range of available widths and radii. We also have the possibility to integrate bearings for extreme environments and higher PV limits. It creates the opportunity to develop a two track conveyor for ultimate loading, and can also support the traceability of products.

Wide range available — **Ideal for Heavy application** — **High wear resistance** — **NO Lubrification** — **High chemical resistance**

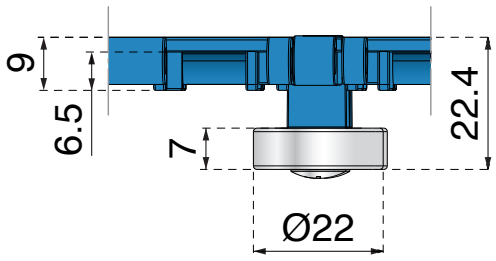

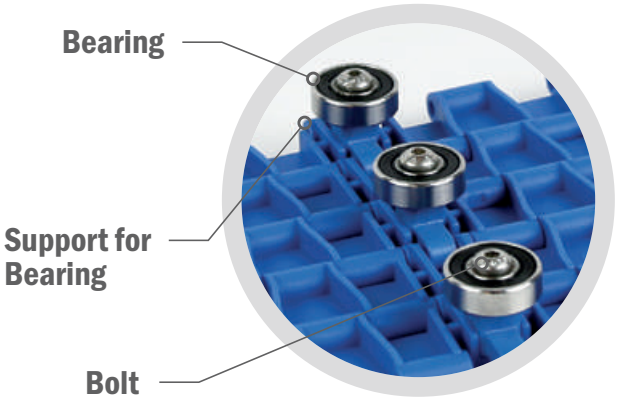

Technical specification

Material of the modules: PA glass fibre reinforced
Color of the modules: Dark Pigeon Blue
Pin: D4 mm, material 1.4301
Pin lock: Stainless steel grub screw

Temperature range: -30°C to 100°C
Max belt speed: 70 m/min on middle radius
Max working load: 19000 N/m belt width
Bearing: S608RS

Order code for 90°

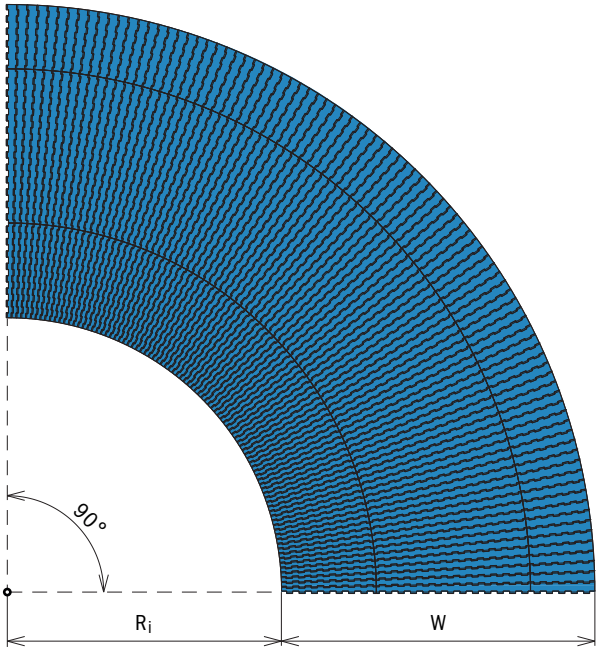

Side Flex Modular Belt Zero Contact PRO ™ 90° | Without bearings

Order code	Radius	Belt Width
5461280439A-M	586	439
5461280524A-M	586	524
5461280864A-M	586	864
5461281034A-M	586	1034
5462280269A-M	756	269
5462280439A-M	756	439
5462280524A-M	756	524
5462280864A-M	756	864

Order code	Radius	Belt Width
5462281034A-M	756	1034
5463280269A-M	1011	269
5463280439A-M	1011	439
5463280524A-M	1011	524
5463280864A-M	1011	864
5463281034A-M	1011	1034
5465280249A-M	1031	249
5464280419A-M	1031	419

Order code	Radius	Belt Width
5464280504A-M	1116	504
5465280419A-M	1201	419
5466280249A-M	1286	249
5465280504A-M	1286	504
5466280419A-M	1456	419
5466280504A-M	1541	504

Side Flex Modular Belt Zero Contact PRO ™ 90° | With bearings

Order code	Radius	Belt Width
5462280249A-M	1031	249
5461280419A-M	1031	419
5461280504A-M	1116	504
5462280419A-M	1201	419

Order code	Radius	Belt Width
5463280249A-M	1286	249
5462280504A-M	1286	504
5463280419A-M	1456	419
5463280504A-M	1541	504



Side Flex Modular Belt Zero Contact PRO ™ 90° | Two track combinations

Track 1 - Order code	Radius	Belt Width		Track 2 - Order code	Radius	Belt Width	Total width
5462280269A-M	756	269	+	5465280249A-M	1031	249	524
5463280269A-M	1011	269	+	5466280249A-M	1286	249	524
5461280439A-M	586	439	+	5464280419A-M	1031	419	864
5462280439A-M	756	439	+	5465280419A-M	1201	419	864
5463280439A-M	1011	439	+	5466280419A-M	1456	419	864
5461280524A-M	586	524	+	5464280504A-M	1116	504	1034
5462280524A-M	756	524	+	5465280504A-M	1286	504	1034
5463280524A-M	1011	524	+	5466280504A-M	1541	504	1034

The gap between the belts is 6 mm.

Order code for 180°

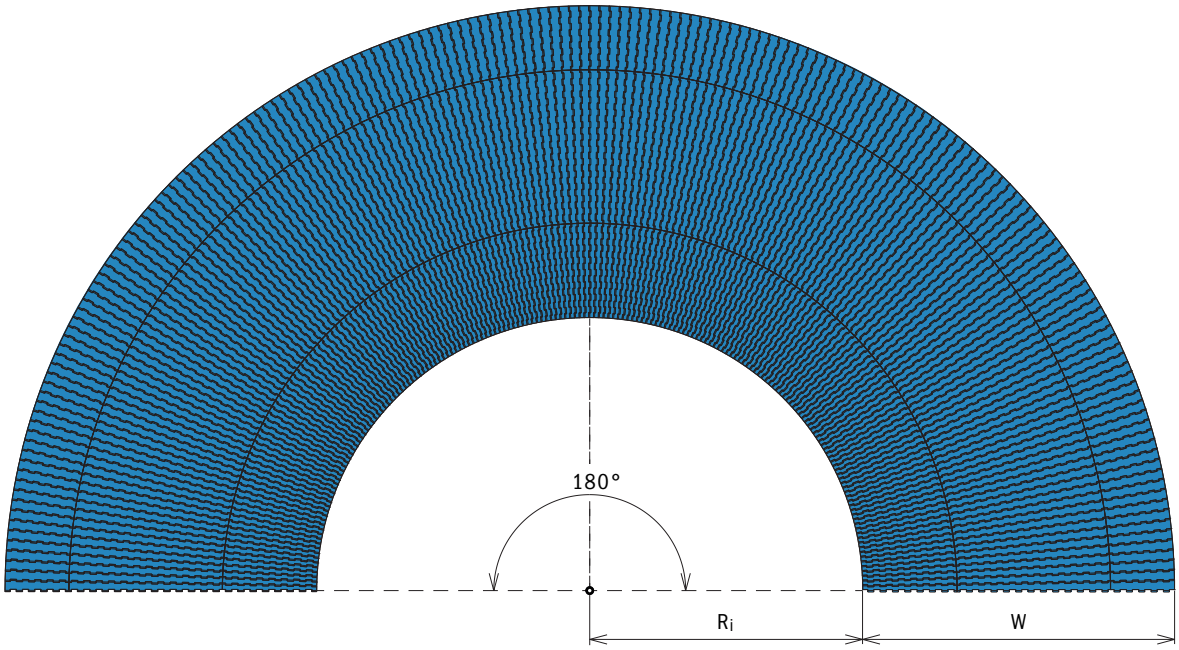

Side Flex Modular Belt Zero Contact PRO ™ 180° | Without bearings

Order code	Radius	Belt Width
5461280439B-M	586	439
5461280524B-M	586	524
5461280864B-M	586	864
5461281034B-M	586	1034
5462280269B-M	756	269
5462280439B-M	756	439
5462280524B-M	756	524
5462280864B-M	756	864

Order code	Radius	Belt Width
5462281034B-M	756	1034
5463280269B-M	1011	269
5463280439B-M	1011	439
5463280524B-M	1011	524
5463280864B-M	1011	864
5463281034B-M	1011	1034
5465280249B-M	1031	249
5464280419B-M	1031	419

Order code	Radius	Belt Width
5464280504B-M	1116	504
5465280419B-M	1201	419
5466280249B-M	1286	249
5465280504B-M	1286	504
5466280419B-M	1456	419
5466280504B-M	1541	504

Side Flex Modular Belt Zero Contact PRO ™ 180° | With bearings

Order code	Radius	Belt Width
5462280249B-M	1031	249
5461280419B-M	1031	419
5461280504B-M	1116	504
5462280419B-M	1201	419

Order code	Radius	Belt Width
5463280249B-M	1286	249
5462280504B-M	1286	504
5463280419B-M	1456	419
5463280504B-M	1541	504



Side Flex Modular Belt Zero Contact PRO ™ 180° | Two track combinations

Track 1 - Order code	Radius	Belt Width		Track 2 - Order code	Radius	Belt Width	Total width
5462280269B-M	756	269	+	5465280249B-M	1031	249	524
5463280269B-M	1011	269	+	5466280249B-M	1286	249	524
5461280439B-M	586	439	+	5464280419B-M	1031	419	864
5462280439B-M	756	439	+	5465280419B-M	1201	419	864
5463280439B-M	1011	439	+	5466280419B-M	1456	419	864
5461280524B-M	586	524	+	5464280504B-M	1116	504	1034
5462280524B-M	756	524	+	5465280504B-M	1286	504	1034
5463280524B-M	1011	524	+	5466280504B-M	1541	504	1034

The gap between the belts is 6 mm.

ZERO 520 CONTACT

CURVE

CURVE CONVEYOR
WITH PLASTIC BELT

The new ***Zero Contact ™ Curve*** is available in different widths with a closed-top surface capable of handling a variety of package sizes, types and configurations including delicate products and applications exiting a shrink wrapper.



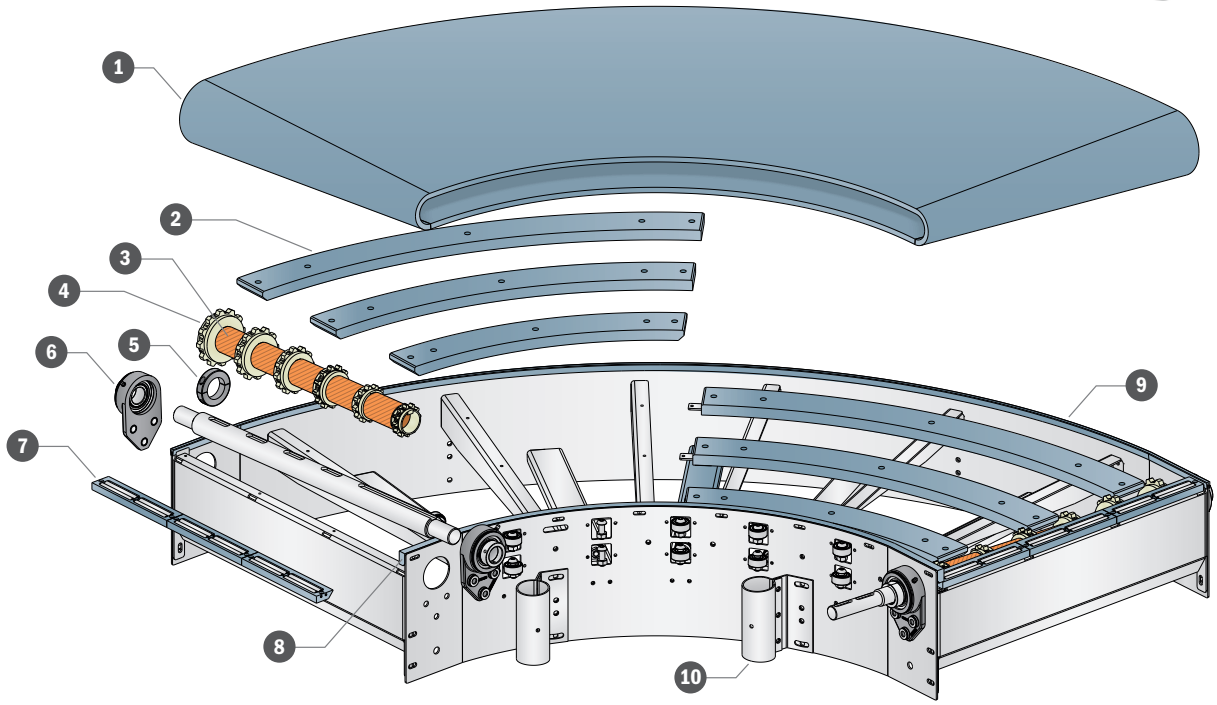

1 **Zero Contact ™ Belt**
2 **Support guides**
3 **Spacer (optional)**
4 **Sprocket**
5 **Locking collars**
6 **Flange bearings**
7 **Transfer modules**
8 **Inside guide**
9 **Outside guide**
10 **Side mounting top bracket**

Technical specification

Available belt width:	200 mm to 1000 mm (increments of 200 mm)	***Belt material:***	Acetal (POM) - RAL 5014
Available curve angle:	90° and 180° (Different angle on request)	***Pins material:***	PBT White
Max belt speed:	70 m/min.	***Frame material:***	Stainless steel - AISI 304
Weight:	9,25 Kg/m²	***Guide material:***	BluLub
Max working load:	2700 N per 200 mm of belt width	***Drive method:***	Solid sprockets PA6 machined
Min. inner radius:	600 mm to 1400 mm (increments of 200 mm)	***Temperature range Dry:***	-40÷80°C
Gearmotor:	SEW	***Temperature range Wet:***	-40÷65°C

If you have questions about a specific application, contact our engineering department.

CURVES RANGE - Angle 90°

Lenght of the belt: 150 Modules

Left Version **CS**

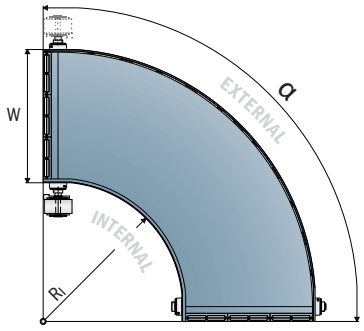

CD Right Version

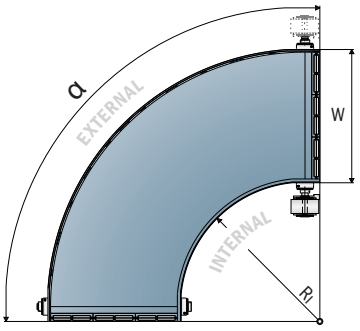

Width (mm)	Version	Rmin. 600	Rmin. 800	Rmin. 1000	Rmin. 1200	Rmin. 1400
200	RIGHT	5451010201A-CD	5451010202A-CD	5451010203A-CD	5451010204A-CD	5451010205A-CD
	LEFT	5451010201A-CS	5451010202A-CS	5451010203A-CS	5451010204A-CS	5451010205A-CS
400	RIGHT	5451010401A-CD	5451010402A-CD	5451010403A-CD	5451010404A-CD	-
	LEFT	5451010401A-CS	5451010402A-CS	5451010403A-CS	5451010404A-CS	-
600	RIGHT	5451010601A-CD	5451010602A-CD	5451010603A-CD	-	-
	LEFT	5451010601A-CS	5451010602A-CS	5451010603A-CS	-	-
800	RIGHT	5451010801A-CD	5451010802A-CD	-	-	-
	LEFT	5451010801A-CS	5451010802A-CS	-	-	-
1000	RIGHT	5451011001A-CD	-	-	-	-
	LEFT	5451011001A-CS	-	-	-	-

CURVES RANGE - Angle 180°

Lenght of the belt: 300 Modules

Left Version **CS**

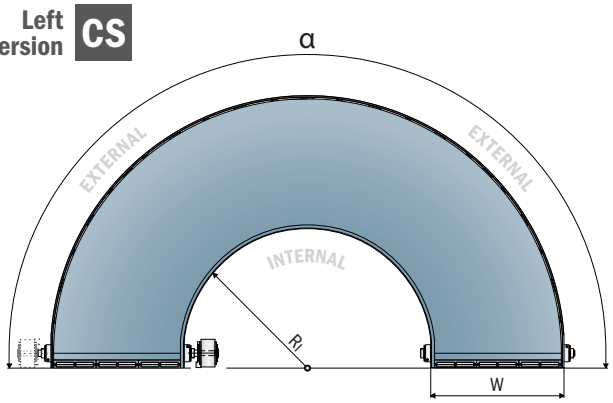

CD Right Version

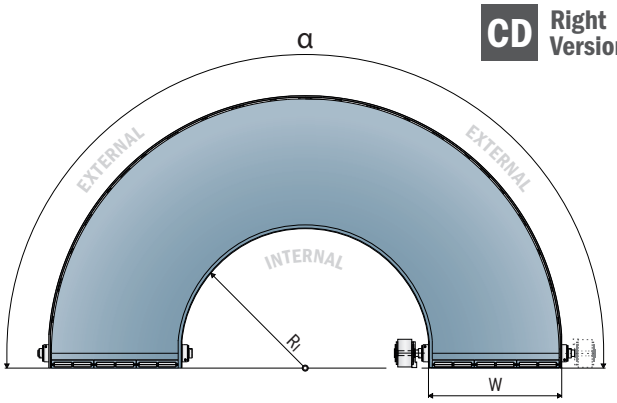

Width (mm)	Version	Rmin. 600	Rmin. 800	Rmin. 1000	Rmin. 1200	Rmin. 1400
200	RIGHT	5452010201A-CD	5452010202A-CD	5452010203A-CD	5452010204A-CD	5452010205A-CD
	LEFT	5452010201A-CS	5452010202A-CS	5452010203A-CS	5452010204A-CS	5452010205A-CS
400	RIGHT	5452010401A-CD	5452010402A-CD	5452010403A-CD	5452010404A-CD	-
	LEFT	5452010401A-CS	5452010402A-CS	5452010403A-CS	5452010404A-CS	-
600	RIGHT	5452010601A-CD	5452010602A-CD	5452010603A-CD	-	-
	LEFT	5452010601A-CS	5452010602A-CS	5452010603A-CS	-	-
800	RIGHT	5452010801A-CD	5452010802A-CD	-	-	-
	LEFT	5452010801A-CS	5452010802A-CS	-	-	-
1000	RIGHT	5452011001A-CD	-	-	-	-
	LEFT	5452011001A-CS	-	-	-	-

Request for quotation

Company		**Contact**	
Sales contact		**Date**	

Technical features	Please mark with an X					**Movex Standard**
Conveyor angle	90°			180°		α =
Curve version	Left			Right		-
Inside radius (mm)	600	800	1000	1200	1400	R_I =
Width (mm)	200	400	600	800	1000	W =
Legs (height*)	Yes			No		H* =
Gearmotor	Yes			No		SEW
Country of destination						-
Shaft diameter (mm)						Ø 20 Motor / Ø 40 Sprocket

* From the top of the belt to the floor.

Application features	Please fill out	**Movex Standard**
Type of product		-
Product dimension (mm)		-
Weight per linear meter (Kg/m)		-
Belt Speed (m/min)		-
Number tracks of products		-
Belt material		LFA
Guide material		BluLub
Type of transfer modules		Part. 34201
Type of external profile		Part. 15300C
Type of internal side guide		Part. 700100G0
Top wear strip material (inside)		BluLub
Return wear strip material		Return roller

Price	

Fill out the form and send to your sales contact or to: **info@movexii.com**

For fields not completed the Movex standard specifications apply.

260/261

Pitch 25,4 mm
H= 21 mm / 25 mm / 28,7 mm

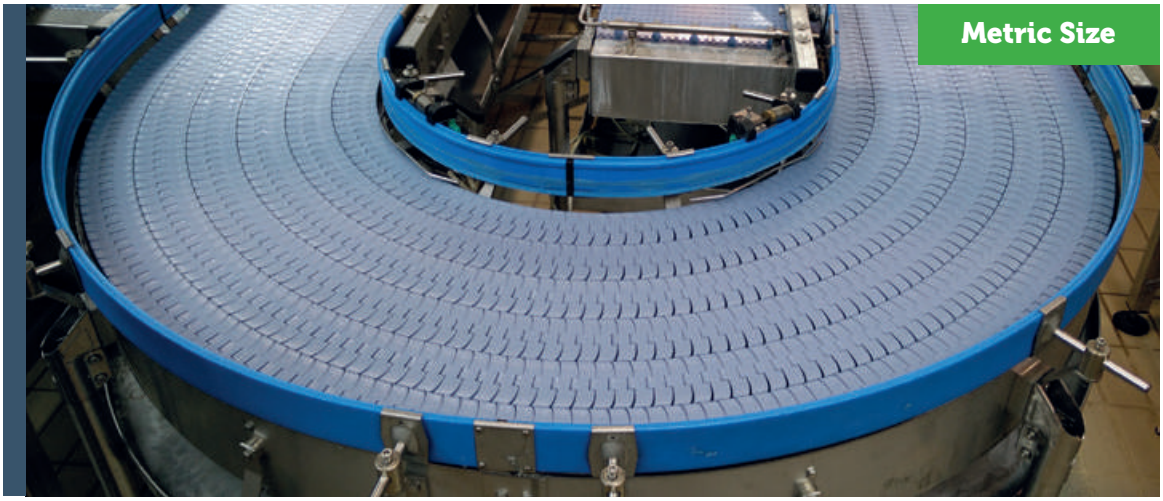

260 M FT
260 M FG
260 TAB

261 M FT
261 TAB

Movex®

260 M FT

Catena curvilinea
Sideflexing belt/chain / Kurvengängige Mattenkette

Magnetic System

Pins: Ferritic SS

25.4mm PITCH

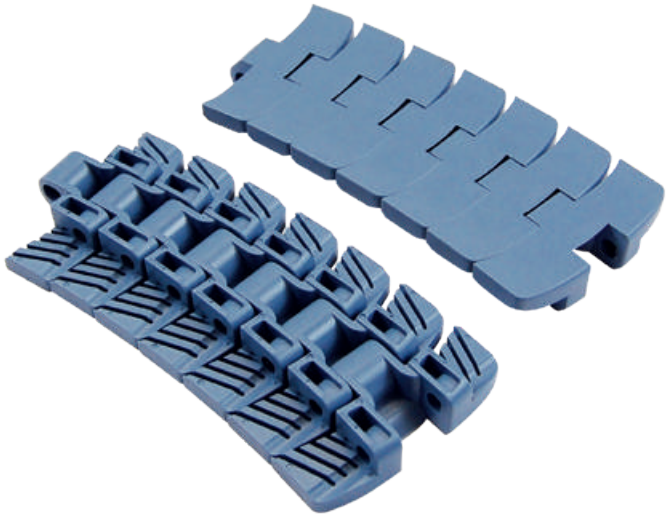

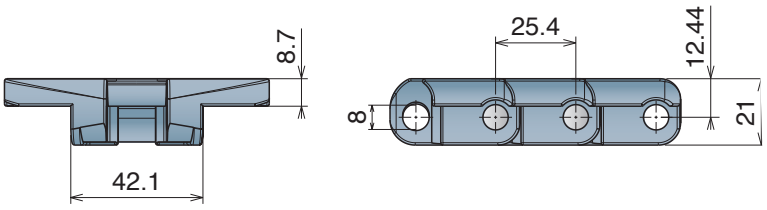

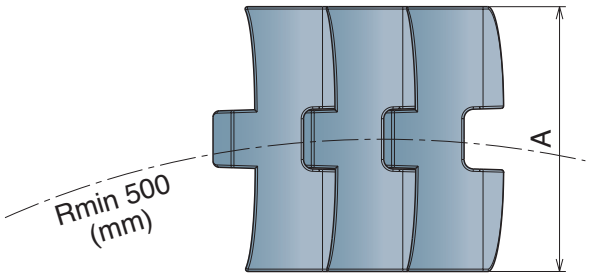

Advantages:

- Heavy duty
- 20% Reduced gap link
- 95% Closed surface

10 feet
3.048 m
120 links

pg. 281-282
pg. 141-147
pg. 516->524

Article-Nr.	Ref.	A (Plate Width) mm	Weight kg/m	Max working load (N)	Sideflex radius mm	Material
11510103	LFA 260 M K330	83,8	1,75	2000	500	LFA
11510105	LFA 260 M K450	114,3	2,30			
11510303	MX 260 M K330	83,8	1,75	1600	500	MX
11510305	MX 260 M K450	114,3	2,30			
11513003	PFX 260 M K330	83,8	1,65	1600	500	PFX
11513005	PFX 260 M K450	114,3	2,20			
11511603	DKM 260 M K330	83,8	1,75	2000	500	DKM
11511605	DKM 260 M K450	114,3	2,30			

260 M FG

Catena curvilinea
Sideflexing belt/chain / Kurvengängige Mattenkette

Magnetic System

Pins: Ferritic SS

25.4mm PITCH

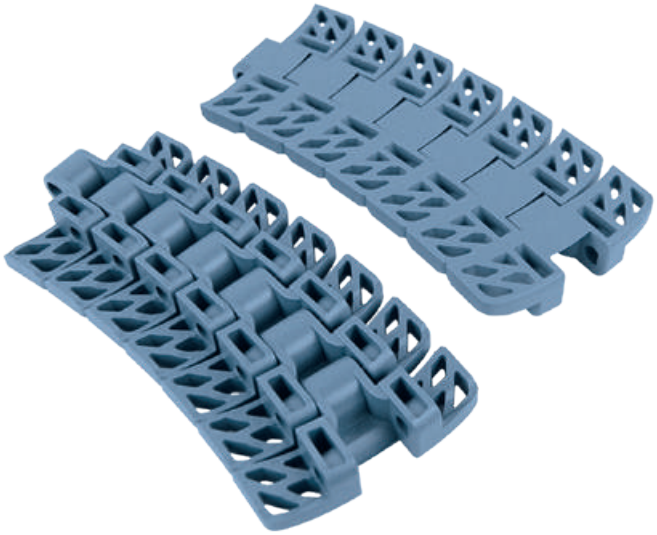

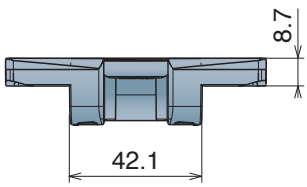

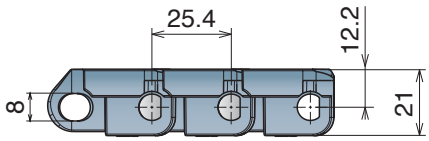

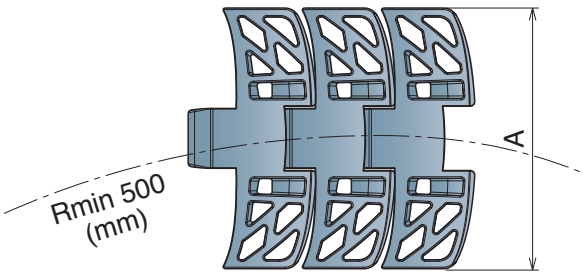

10 feet
3.048 m
120 links

pg. 281-282
pg. 141-147
pg. 516->524

Article-Nr.	Ref.	A (Plate Width) mm	Weight kg/m	Max working load (N)	Sideflex radius mm	Material
11540103	**LFA 260 M FG K330**	83,8	1,62	2000	500	LFA
11540105	**LFA 260 M FG K450**	114,3	2,13			
11540303	**MX 260 M FG K330**	83,8	1,62	1600	500	MX
11540305	**MX 260 M FG K450**	114,3	2,13			
11543003	**PFX 260 M FG K330**	83,8	1,52	1600	500	PFX
11543005	**PFX 260 M FG K450**	114,3	2,03			

260 TAB

Catena curvilinea
Sideflexing belt/chain / Kurvengängige Mattenkette

Tab System

Pins: Ferritic SS

25.4mm PITCH



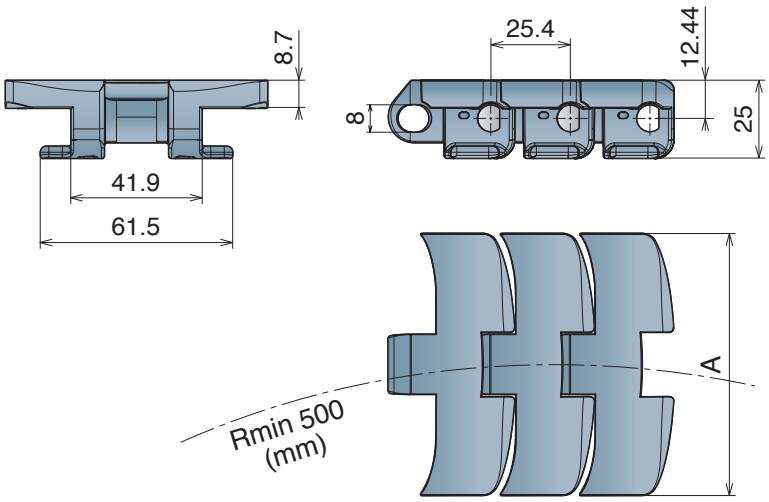

10 feet
3.048 m
120 links

pg. 281-282

pg. 163

pg. 516->524

Article-Nr.	Ref.	A (Plate Width) mm	Weight kg/m	Max working load (N)	Sideflex radius mm	Material
11520103	LFA 260 TAB K330	83,8	1,85	2000	500	LFA
11520105	LFA 260 TAB K450	114,3	2,00			
11520303	MX 260 TAB K330	83,8	1,85	1600	500	MX
11520305	MX 260 TAB K450	114,3	2,00			
11521603	DKM 260 TAB K330	83,8	1,85	2000	500	DKM
11521605	DKM 260 TAB K450	114,3	2,00			
11523003	PFX 260 TAB K330	83,8	1,75	1600	500	PFX
11523005	PFX 260 TAB K450	114,3	1,90			

261 M FT

Catena curvilinea
Sideflexing belt/chain / Kurvengängige Mattenkette

Magnetic System

Pins: Ferritic SS

25.4mm PITCH

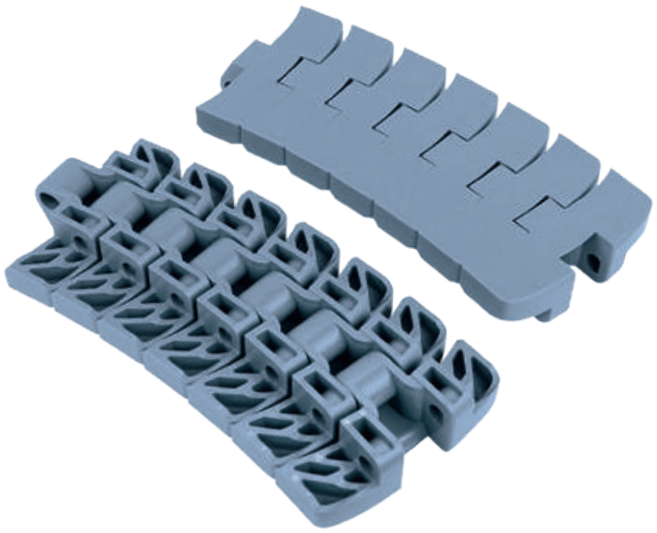

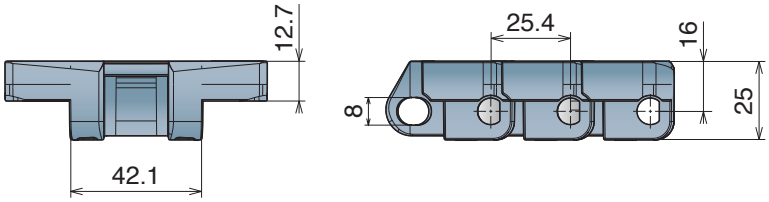

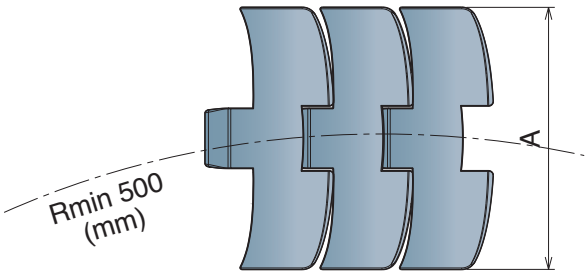

10 feet
3.048 m
120 links

pg. 281-282
pg. 148-154
pg. 516->524

Article-Nr.	Ref.	A (Plate Width) mm	Weight kg/m	Max working load (N)	Sideflex radius mm	Material
11530103	LFA 260 M FG K330	83,8	2,00	2000	500	LFA
11530105	LFA 260 M FG K450	114,3	2,52			
11530303	MX 260 M FG K330	83,8	2,00	1600	500	MX
11530305	MX 260 M FG K450	114,3	2,52			
11531603	DKM 260 M FG K330	83,8	2,00	2000	500	DKM
11531605	DKM 260 M FG K450	114,3	2,52			
11531703	MWX 260 M FG K330	83,8	2,16	2000	500	MWX
11531705	MWX 260 M FG K450	114,3	2,70			

261 TAB

Catena curvilinea
Sideflexing belt/chain / Kurvengängige Mattenkette

Tab System

Pins: Ferritic SS

25.4mm PITCH

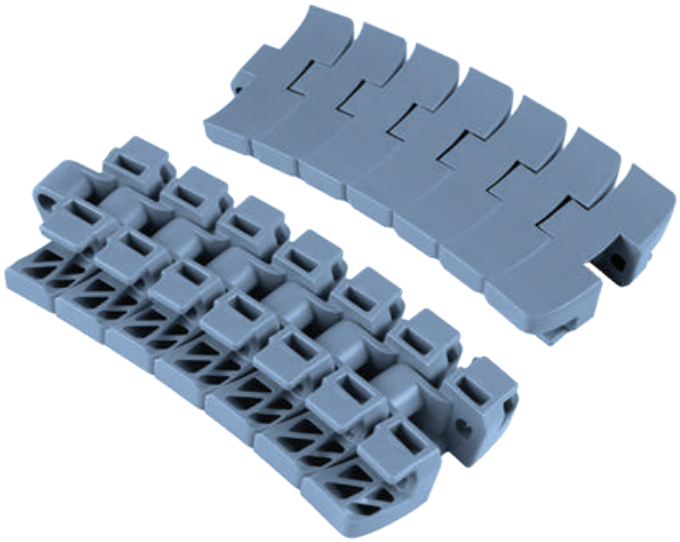

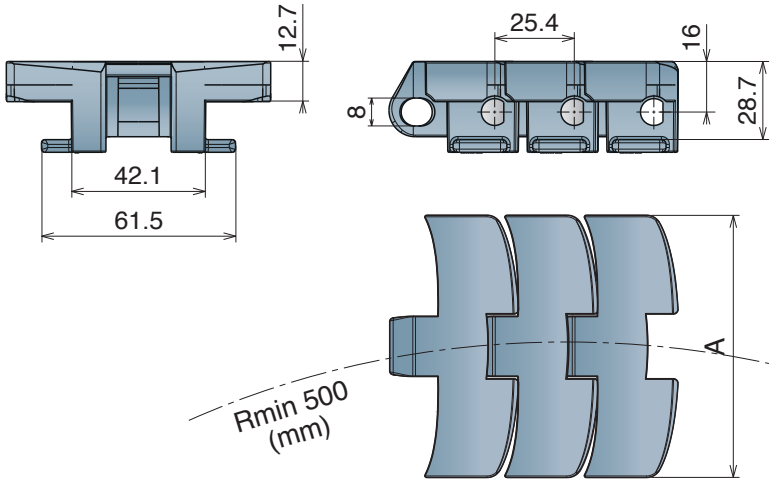

10 feet
3.048 m
120 links

pg. 281-282

pg. 163

pg. 516->524

Article-Nr.	Ref.	A (Plate Width) mm	Weight kg/m	Max working load (N)	Sideflex radius mm	Material
11900103	LFA 261 TAB K330	83,8	2,00	2000	500	LFA
11900105	LFA 261 TAB K450	114,3	2,52			
11900303	MX 261 TAB K330	83,8	2,00	1600	500	MX
11900305	MX 261 TAB K450	114,3	2,52			
11901603	DKM 261 TAB K330	83,8	2,00	2000	500	DKM
11901605	DKM 261 TAB K450	114,3	2,52			
11901703	MWX 261 TAB K330	83,8	2,16	2000	500	MWX
11901705	MWX 261 TAB K450	114,3	2,70			

992



Belt sprockets

510  Pag 266

521-520 HD-520 PRO LBP  Pag 267

 Pag 267

521-520 HD-520 PRO LBP  Pag 268

 Pag 268

520  Pag 269

520  Pag 269

520  Pag 270

520  Pag 270

525-530  Pag 271

525-530  Pag 271

590  Pag 272

590  Pag 272

550  Pag 273

550  Pag 273

550  Pag 274

550  Pag 274

550 PRO  Pag 275

550 PRO  Pag 275

550 PRO  Pag 276

550 PRO  Pag 276

551  Pag 277

551  Pag 277

551  Pag 278

551  Pag 278

552  Pag 279

552  Pag 279

556  Pag 280

556  Pag 280

260-261  Pag 281

260-261  Pag 281

260-261  Pag 282

260-261  Pag 282

600  Pag 283

600  Pag 283

ZERO CONTACT  Pag 284

ZERO CONTACT PRO  Pag 285

500RR  Pag 286

500RR  Pag 286

500RR SPLIT V. Pag 287

Info Material:

pg. 529

Materiale / *Material / Materialien:*
Poliammide/*Polyamide/Polyamid*
Viti: Acciaio inox/*Screws: Stainless steel/Schrauben: Edelstahl*
Dadi: ferro zincato/*Nuts: zinc plated steel/Mutter: verzinkter Stahl*

510 Ruota traino divisa, fresata
Split drive sprocket, machined / geteiltes Antriebskettenrad gefräst



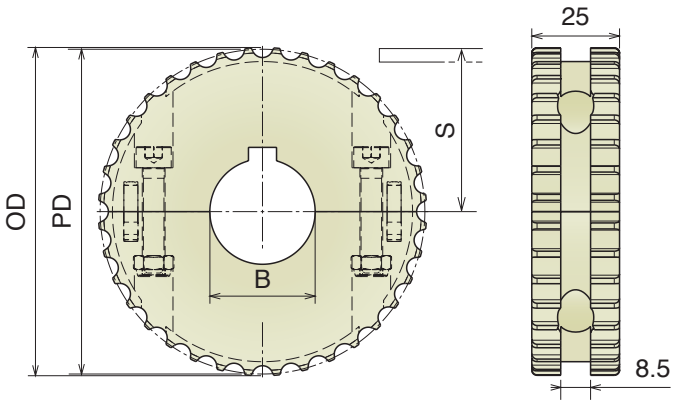

Part	Article-Nr.	Z-	Bore	PD	OD	S
1599	159936E	16*	20	41	40,2	16,65
1599	159896E	20	25	51,5	51,5	22,3
1601	160101E	18*	25	46,5	47,3	20,2
1602	160111E		20* 20 ⍁			
1602	160201E	24*	25	61,8	62,6	27,9
1603	160206E		25* 25 ⍁			
1603	160301	36	25	92,6	93,5	43,3
1603	160302		30			
1603	160303		35			
1603	160304		40			
1603	160306		25* 25 ⍁			
1603	160307		30* 30 ⍁			
1603	160308		40* 40 ⍁			

*Sprocket z-16, z-18, z-20 and z-24 are supplied non-split

Materiale / *Material* / *Materialien:*
Poliammide/*Polyamide/Polyamid*
Viti: Acciaio inox/*Screws: Stainless steel/Schrauben: Edelstahl*
Dadi: ferro zincato/*Nuts: zinc plated steel/Mutter: verzinkter Stahl*

521-520 HD-520 *PRO* LBP



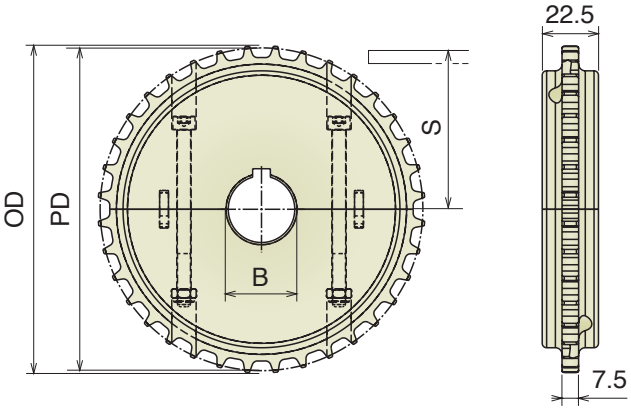

Part	Article-Nr.	Z-	Bore	PD	OD	S
1561	156101	28	25	113,4	115,4	52,4
1561	156102		30			
1561	156103		35			
1561	156104		40			
1561	156106		25* 25 ⏍			
1561	156107		30* 30 ⏍			
1561	156108		40* 40 ⏍			
1562	156201	36	25	145,7	147,7	68,5
1562	156202		30			
1562	156203		35			
1562	156204		40			
1562	156206		25* 25 ⏍			
1562	156207		30* 30 ⏍			
1562	156208		40* 40 ⏍			
1563	156301	38	25	153,8	155,8	72,6
1563	156302		30			
1563	156303		35			
1563	156304		40			
1563	156306		25* 25 ⏍			
1563	156307		30* 30 ⏍			
1563	156308		40* 40 ⏍			
1564	156401	40	25	161,9	163,8	76,6
1564	156402		30			
1564	156403		35			
1564	156404		40			
1564	156406		25* 25 ⏍			
1564	156407		30* 30 ⏍			
1564	156408		40* 40 ⏍			

Ruota rinvio divisa, fresata
Split idler sprocket, machined / geteiltes Umlenkrad, gefräst



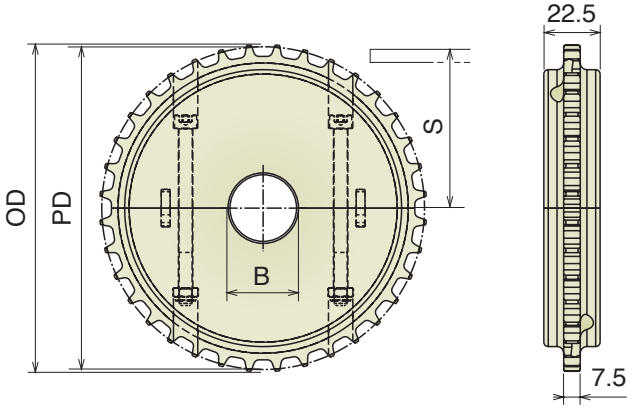

Part	Article-Nr.	Z-	Bore	PD	OD	S
1561	156150	28	18*	113,4	115,4	52,4
1561	156151		25			
1561	156152		30			
1561	156153		35			
1561	156154		40			
1562	156250	36	18*	145,7	147,7	68,5
1562	156251		25			
1562	156252		30			
1562	156253		35			
1562	156254		40			
1563	156350	38	18*	153,8	155,8	72,6
1563	156351		25			
1563	156352		30			
1563	156353		35			
1563	156354		40			
1564	156450	40	18*	161,9	163,8	76,6
1564	156451		25			
1564	156452		30			
1564	156453		35			
1564	156454		40			

*Plain Bore

Materiale / *Material* / *Materialien:*
Poliammide/*Polyamide/Polyamid*
Viti: Acciaio inox/*Screws: Stainless steel/Schrauben: Edelstahl*
Dadi: ferro zincato/*Nuts: zinc plated steel/Mutter: verzinkter Stahl*

521-520 HD-520 *PRO* LBP

Ruota traino divisa, stampata
Split drive sprocket, molded
geteiltes Antriebskettenrad, gespritzt



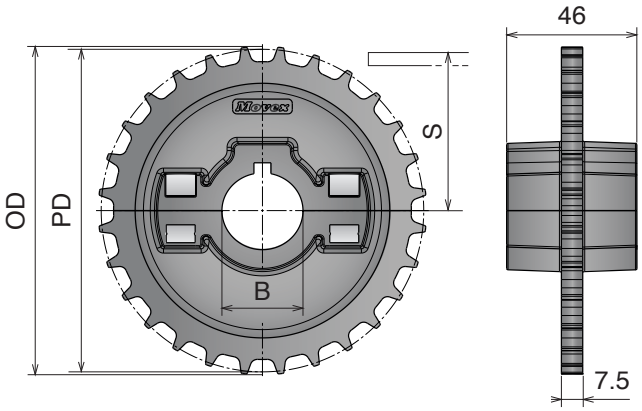

Part	Article-Nr.	Z-	Bore	PD	OD	S
1630	163001	24	25	97,3	99,3	44,3
1630	163002		30			
1630	163003		35			
1630	163004		40			
1630	163006		25* 25 ⏍			
1630	163007		30* 30 ⏍			
1630	163008		40* 40 ⏍			
1631	163101	28	25	113,4	115,4	52,4
1631	163102		30			
1631	163103		35			
1631	163104		40			
1631	163106		25* 25 ⏍			
1631	163107		30* 30 ⏍			
1631	163108		40* 40 ⏍			
1632	163201	36	25	145,7	147,7	68,5
1632	163202		30			
1632	163203		35			
1632	163204		40			
1632	163206		25* 25 ⏍			
1632	163207		30* 30 ⏍			
1632	163208		40* 40 ⏍			

Ruota rinvio divisa, stampata
Split idler sprocket, molded / geteiltes Umlenkrad, gespritzt



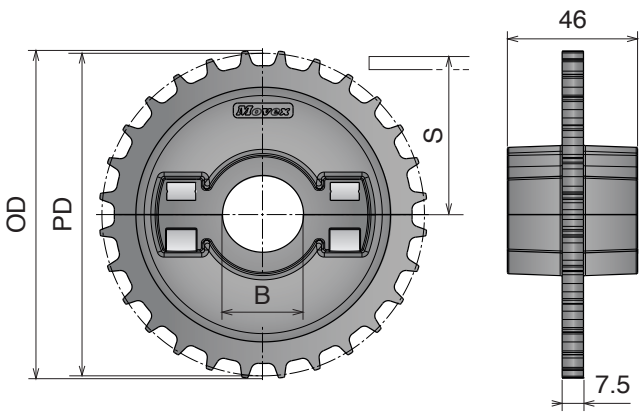

Part	Article-Nr.	Z-	Bore	PD	OD	S
1630	163051	24	25	97,3	99,3	44,3
1630	163052		30			
1630	163053		35			
1630	163054		40			
1631	163151	28	25	113,4	115,4	52,4
1631	163152		30			
1631	163153		35			
1631	163154		40			
1632	163251	36	25	145,7	147,7	68,5
1632	163252		30			
1632	163253		35			
1632	163254		40			

Materiale / *Material* / *Materialien:*
Poliammide/*Polyamide/Polyamid*
Viti: Acciaio inox/*Screws: Stainless steel/Schrauben: Edelstahl*
Dadi: ferro zincato/*Nuts: zinc plated steel/Mutter: verzinkter Stahl*

520 Ruota traino divisa, fresata
Split drive sprocket, machined / geteiltes Antriebskettenrad gefräst



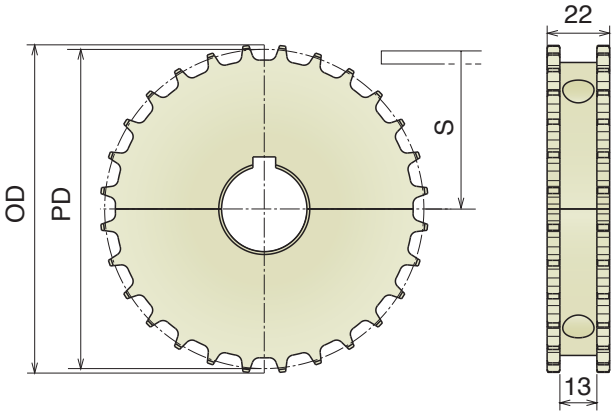

Part	Article-Nr.	Z-	Bore	PD	OD	S
1501	150101	28	25	113,4	115,4	52,4
1501	150102		30			
1501	150103		35			
1501	150104		40			
1501	150106		25* 25 ⎅			
1501	150107		30* 30 ⎅			
1501	150108		40* 40 ⎅			
1502	150201	36	25	145,7	147,7	68,5
1502	150202		30			
1502	150203		35			
1502	150204		40			
1502	150206		25* 25 ⎅			
1502	150207		30* 30 ⎅			
1502	150208		40* 40 ⎅			
1503	150301	38	25	153,8	155,8	72,6
1503	150302		30			
1503	150303		35			
1503	150304		40			
1503	150306		25* 25 ⎅			
1503	150307		30* 30 ⎅			
1503	150308		40* 40 ⎅			
1504	150401	40	25	161,9	163,8	76,6
1504	150402		30			
1504	150403		35			
1503	150404		40			
1504	150406		25* 25 ⎅			
1504	150407		30* 30 ⎅			
1504	150408		40* 40 ⎅			

Ruota rinvio divisa, fresata
Split idler sprocket, machined / geteiltes Umlenkrad, gefräst



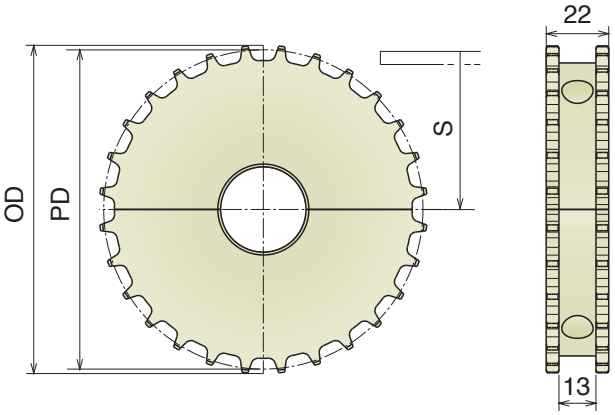

Part	Article-Nr.	Z-	Bore	PD	OD	S
1501	150150	28	18*	113,4	115,4	52,4
1501	150151		25			
1501	150152		30			
1501	150153		35			
1501	150154		40			
1502	150250	36	18*	145,7	147,7	68,5
1502	150251		25			
1502	150252		30			
1502	150253		35			
1502	150254		40			
1503	150350	38	18*	153,8	155,8	72,6
1503	150351		25			
1503	150352		30			
1503	150353		35			
1503	150354		40			
1504	150450	40	18*	161,9	163,8	76,6
1504	150451		25			
1504	150452		30			
1504	150453		35			
1504	150454		40			

*Plain Bore

Materiale / *Material / Materialien:*
Poliammide rinforzato/Polyamide reinforced/Verstärktes Polyamid
Viti: Acciaio inox/*Screws: Stainless steel/Schrauben: Edelstahl*
Dadi: Ottone nichelato/*Nuts: Nickel plated brass/Mutter: Messing*

520 Ruota traino divisa, stampata
Split drive sprocket, molded / geteiltes Antriebskettenrad, gespritzt



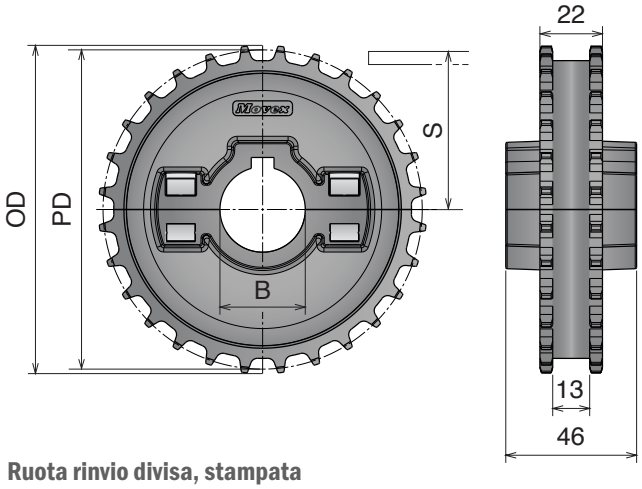

Part	Article-Nr.	Z-	Bore	PD	OD	S
1505	150501	24	25	97,3	99,3	44,3
1505	150502		30			
1505	150503		35			
1505	150504		40			
1505	150506		25* 25 ⎅			
1505	150507		30* 30 ⎅			
1505	150508		40* 40 ⎅			
1506	150601	28	25	113,4	115,4	52,4
1506	150602		30			
1506	150603		35			
1506	150604		40			
1506	150606		25* 25 ⎅			
1506	150607		30* 30 ⎅			
1506	150608		40* 40 ⎅			
1507	150701	36	25	145,7	147,7	68,5
1507	150702		30			
1507	150703		35			
1507	150704		40			
1507	150706		25* 25 ⎅			
1507	150707		30* 30 ⎅			
1507	150708		40* 40 ⎅			

Ruota rinvio divisa, stampata
Split idler sprocket, molded / geteiltes Umlenkrad, gespritzt



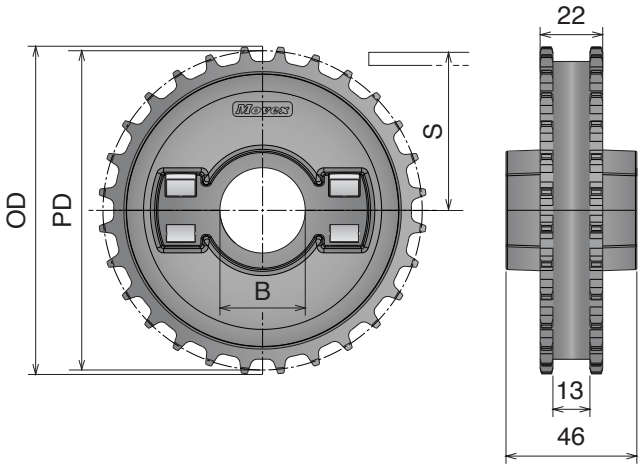

Part	Article-Nr.	Z-	Bore	PD	OD	S
1505	150551	24	25	97,3	99,3	44,3
1505	150552		30			
1505	150553		35			
1505	150554		40			
1506	150651	28	25	113,4	115,4	52,4
1506	150652		30			
1506	150653		35			
1506	150654		40			
1507	150751	36	25	145,7	147,7	68,5
1507	150752		30			
1507	150753		35			
1507	150754		40			

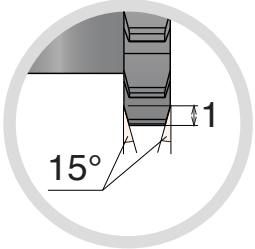

Movex

Materiale / *Material / Materialien:*
Poliammide/*Polyamide/Polyamid*
Viti: Acciaio inox/*Screws: Stainless steel/Schrauben: Edelstahl*
Dadi: ferro zincato/*Nuts: zinc plated steel/Mutter: verzinkter Stahl*

525-530

Ruota traino divisa, fresata
Split drive sprocket, machined / geteiltes Antriebskettenrad gefräst



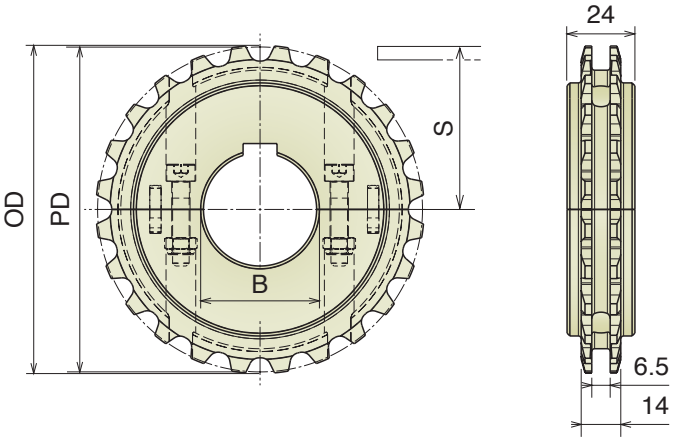

Part	Article-Nr.	Z-	Bore	PD	OD	S
1581	158101E	12**	25	58,1	58,2	24,1
1581	158106E		25x25 ⏍			
1582	158201E	16**	25	77,1	77,7	33,6
1582	158202E		30			
1582	158206E		25x25 ⏍			
1582	158207E		30x30 ⏍			
1583	158301	24	25	114,9	115,5	52,5
1583	158302		30			
1583	158303		35			
1583	158304		40			
1583	158306		25x25 ⏍			
1583	158307		30x30 ⏍			
1583	158308		40x40 ⏍			
1584	158401	32	25	153,4	154,8	71,75
1584	158402		30			
1584	158403		35			
1584	158404		40			
1584	158406		25x25 ⏍			
1584	158407		30x30 ⏍			
1584	158408		40x40 ⏍			

**Idler sprocket Z-12 and Z-16 are supplied non-split.

Ruota rinvio divisa, fresata
Split idler sprocket, machined / geteiltes Umlenkrad, gefräst



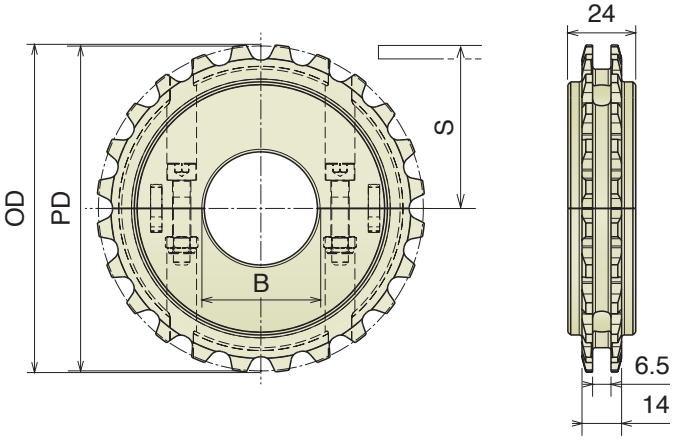

Part	Article-Nr.	Z-	Bore	PD	OD	S
1581	158150E	12**	18*	58,1	58,2	24,1
1581	158151E		25			
1582	158250E	16**	18*	77,1	77,7	33,6
1582	158251E		25			
1582	158252E		30			
1583	158350	24	18*	114,9	115,5	52,5
1583	158351		25			
1583	158352		30			
1583	158353		35			
1583	158354		40			
1584	158450	32	18*	153,4	154,8	71,75
1584	158451		25			
1584	158452		30			
1584	158453		35			
1584	158454		40			

**Idler sprocket Z-12 and Z-16 are supplied non-split.
*Plain Bore

Materiale / *Material / Materialien:*
Poliammide/*Polyamide/Polyamid*
Viti: Acciaio inox/*Screws: Stainless steel/Schrauben: Edelstahl*
Dadi: ferro zincato/*Nuts: zinc plated steel/Mutter: verzinkter Stahl*

590 Ruota traino divisa, fresata
Split drive sprocket, machined / geteiltes Antriebskettenrad gefräst



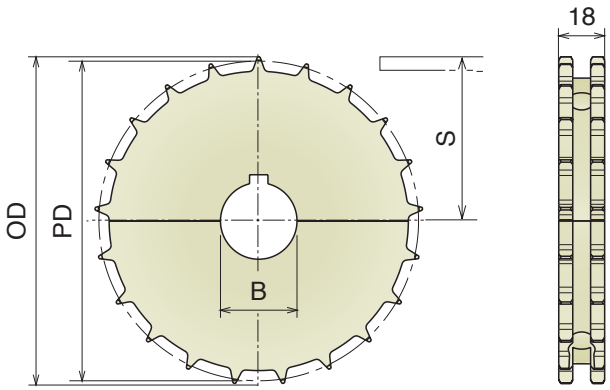

Part	Article-Nr.	Z-	Bore	PD	OD	S
1511	151101	17	25	100,7	103,4	46,0
1511	151102		30			
1511	151103		35			
1511	151104		40			
1511	151106		25* 25 ⍁			
1511	151107		30* 30 ⍁			
1511	151108		40* 40 ⍁			
1512	151201	21	25	126,0	128,7	58,65
1512	151202		30			
1512	151203		35			
1512	151204		40			
1512	151206		25* 25 ⍁			
1512	151207		30* 30 ⍁			
1512	151208		40* 40 ⍁			
1513	151301	24	25	142,9	145,6	67,1
1513	151302		30			
1513	151303		35			
1513	151304		40			
1513	151306		25* 25 ⍁			
1513	151307		30* 30 ⍁			
1513	151308		40* 40 ⍁			
1514	151401	25	25	149,0	151,7	70,15
1514	151402		30			
1514	151403		35			
1514	151404		40			
1514	151406		25* 25 ⍁			
1514	151407		30* 30 ⍁			
1514	151408		40* 40 ⍁			

Ruota rinvio divisa, fresata
Split idler sprocket, machined / geteiltes Umlenkrad, gefräst



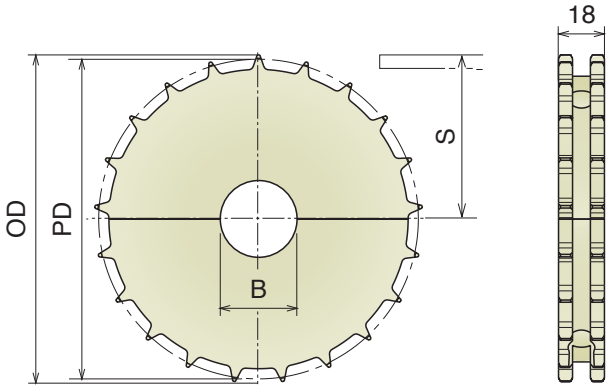

Part	Article-Nr.	Z-	Bore	PD	OD	S
1511	151150	17	18*	100,7	103,4	46,0
1511	151151		25			
1511	151152		30			
1511	151153		35			
1511	151154		40			
1512	151250	21	18*	126,0	128,7	58,65
1512	151251		25			
1512	151252		30			
1512	151253		35			
1512	151254		40			
1513	151350	24	18*	142,9	145,6	67,1
1513	151351		25			
1513	151352		30			
1513	151353		35			
1513	151354		40			
1514	151450	25	18*	149,0	151,7	70,15
1514	151451		25			
1514	151452		30			
1514	151453		35			
1514	151454		40			

*Plain Bore

550 Ruota traino divisa, fresata
Split drive sprocket, machined / geteiltes Antriebskettenrad gefräst



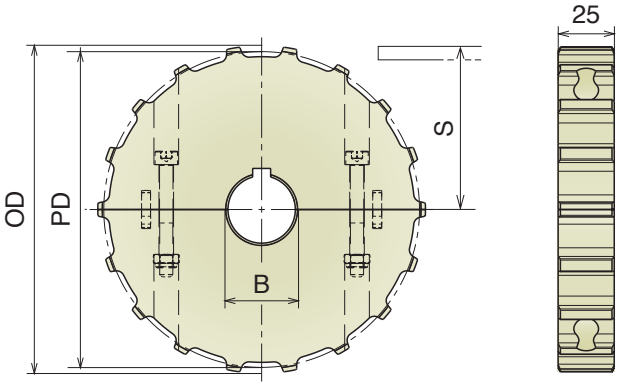

Part	Article-Nr.	Z-	Bore	PD	OD	S
1521	152101	14	25	114,1	114,0	52,7
1521	152102		30			
1521	152103		35			
1521	152104		40			
1521	152106		25* 25 ⍁			
1521	152107		30* 30 ⍁			
1521	152108		40* 40 ⍁			
1522	152201	16	25	130,2	130,0	60,7
1522	152202		30			
1522	152203		35			
1522	152204		40			
1522	152206		25* 25 ⍁			
1522	152207		30* 30 ⍁			
1522	152208		40* 40 ⍁			
1523	152301	18	25	146,3	146,0	68,8
1523	152302		30			
1523	152303		35			
1523	152304		40			
1523	152306		25* 25 ⍁			
1523	152307		30* 30 ⍁			
1523	152308		40* 40 ⍁			
1524	152401	20	25	162,4	162,0	76,8
1524	152402		30			
1524	152403		35			
1524	152404		40			
1524	152406		25* 25 ⍁			
1524	152407		30* 30 ⍁			
1524	152408		40* 40 ⍁			

Ruota rinvio divisa, fresata
Split idler sprocket, machined / geteiltes Umlenkrad, gefräst



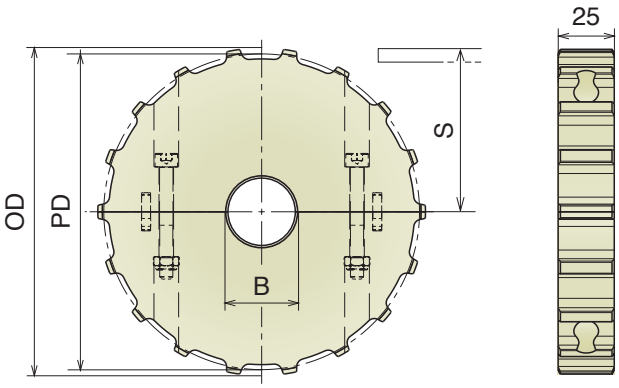

Part	Article-Nr.	Z-	Bore	PD	OD	S
1521	152150	14	18*	114,1	114,0	52,7
1521	152151		25			
1521	152152		30			
1521	152153		35			
1521	152154		40			
1522	152250	16	18*	130,2	130,0	60,7
1522	152251		25			
1522	152252		30			
1522	152253		35			
1522	152254		40			
1523	152350	18	18*	146,3	146,0	68,8
1523	152351		25			
1523	152352		30			
1523	152353		35			
1523	152354		40			
1524	152450	20	18*	162,4	162,0	76,8
1524	152451		25			
1524	152452		30			
1524	152453		35			
1524	152454		40			

*Plain Bore

Materiale / *Material / Materialien:*
Poliammide rinforzato/Polyamide reinforced/Verstärktes Polyamid
Viti: Acciaio inox/*Screws: Stainless steel/Schrauben: Edelstahl*
Dadi: Ottone nichelato/*Nuts: Nickel plated brass/Mutter: Messing*

550 Ruota traino divisa, stampata
Split drive sprocket, molded / geteiltes Antriebskettenrad, gespritzt



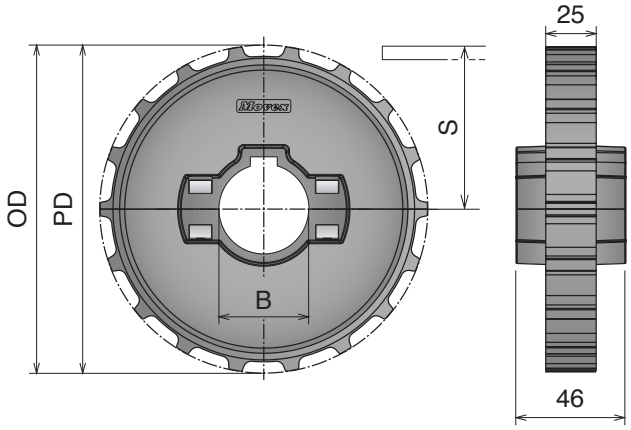

Part	Article-Nr.	Z-	Bore	PD	OD	S
1525	152501	14	25	114,1	114,0	52,7
1525	152502		30			
1525	152503		35			
1525	152504		40			
1525	152506		25* 25 ⏍			
1525	152507		30* 30 ⏍			
1525	152508		40* 40 ⏍			
1526	152601	16	25	130,2	130,0	60,7
1526	152602		30			
1526	152603		35			
1526	152604		40			
1526	152606		25* 25 ⏍			
1526	152607		30* 30 ⏍			
1526	152608		40* 40 ⏍			
1527	152701	18	25	146,3	146,0	68,8
1527	152702		30			
1527	152703		35			
1527	152704		40			
1527	152706		25* 25 ⏍			
1527	152707		30* 30 ⏍			
1527	152708		40* 40 ⏍			
1528	152801	20	25	162,4	162,0	76,8
1528	152802		30			
1528	152803		35			
1528	152804		40			
1528	152806		25* 25 ⏍			
1528	152807		30* 30 ⏍			
1528	152808		40* 40 ⏍			

Ruota rinvio divisa, stampata
Split idler sprocket, molded / geteiltes Umlenkrad, gespritzt



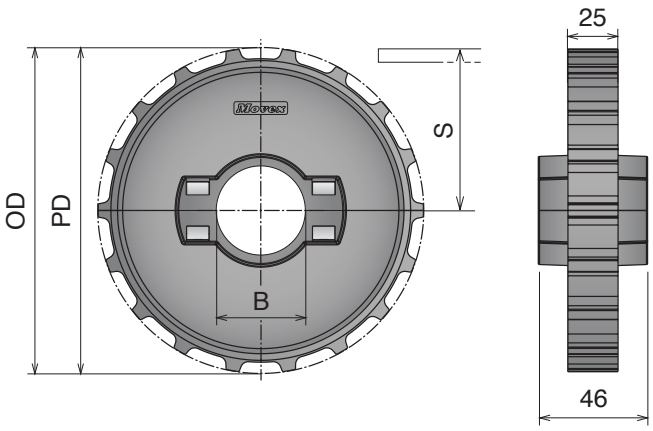

Part	Article-Nr.	Z-	Bore	PD	OD	S
1525	152551	14	25	114,1	114,0	52,7
1525	152552		30			
1525	152553		35			
1525	152554		40			
1526	152651	16	25	130,2	130,0	60,7
1526	152652		30			
1526	152653		35			
1526	152654		40			
1527	152751	18	25	146,3	146,0	68,8
1527	152752		30			
1527	152753		35			
1527	152754		40			
1528	152851	20	25	162,4	162,0	76,8
1528	152852		30			
1528	152853		35			
1528	152854		40			

Materiale / *Material* / *Materialien:*
Poliammide/*Polyamide/Polyamid*
Viti: Acciaio inox/*Screws: Stainless steel/Schrauben: Edelstahl*
Dadi: ferro zincato/*Nuts: zinc plated steel/Mutter: verzinkter Stahl*

550 PRO

Ruota traino divisa, fresata
Split drive sprocket, machined / geteiltes Antriebskettenrad gefräst



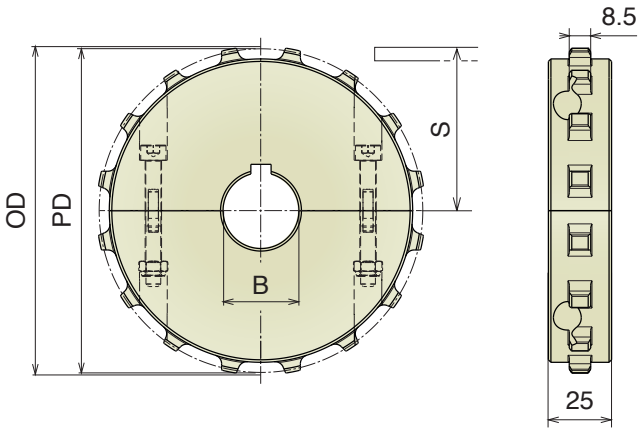

Part	Article-Nr.	Z-	Bore	PD	OD	S
1640	164001	14	25	114,1	114,0	52,7
1640	164002		30			
1640	164003		35			
1640	164004		40			
1640	164006		25* 25 ⍁			
1640	164007		30* 30 ⍁			
1640	164008		40* 40 ⍁			
1641	164101	16	25	130,2	130,0	60,7
1641	164102		30			
1641	164103		35			
1641	164104		40			
1641	164106		25* 25 ⍁			
1641	164107		30* 30 ⍁			
1641	164108		40* 40 ⍁			
1642	164201	18	25	146,3	146,0	68,8
1642	164202		30			
1642	164203		35			
1642	164204		40			
1642	164206		25* 25 ⍁			
1642	164207		30* 30 ⍁			
1642	164208		40* 40 ⍁			
1643	164301	20	25	162,4	162,0	76,8
1643	164302		30			
1643	164303		35			
1643	164304		40			
1643	164306		25* 25 ⍁			
1643	164307		30* 30 ⍁			
1643	164308		40* 40 ⍁			

Ruota rinvio divisa, fresata
Split idler sprocket, machined / geteiltes Umlenkrad, gefräst



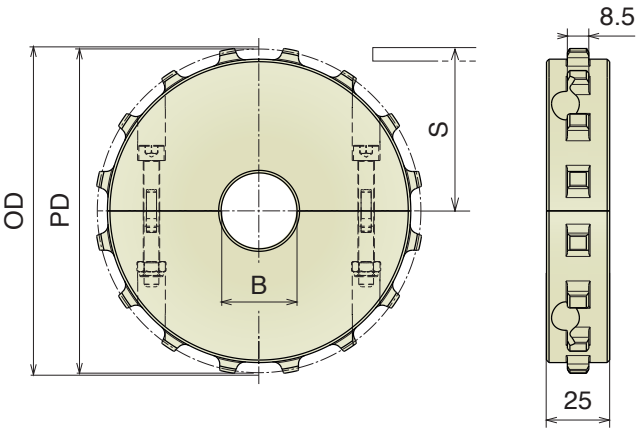

Part	Article-Nr.	Z-	Bore	PD	OD	S
1640	164050	14	18*	114,1	114,0	52,7
1640	164051		25			
1640	164052		30			
1640	164053		35			
1640	164054		40			
1641	164150	16	18*	130,2	130,0	60,7
1641	164151		25			
1641	164152		30			
1641	164153		35			
1641	164154		40			
1642	164250	18	18*	146,3	146,0	68,8
1642	164251		25			
1642	164252		30			
1642	164253		35			
1642	164254		40			
1643	164350	20	18*	162,4	162,0	76,8
1643	164351		25			
1643	164352		30			
1643	164353		35			
1643	164354		40			

*Plain Bore

Materiale / *Material / Materialien:*
Poliammide rinforzato/Polyamide reinforced/Verstärktes Polyamid
Viti: Acciaio inox/*Screws: Stainless steel/Schrauben: Edelstahl*
Dadi: Ottone nichelato/*Nuts: Nickel plated brass/Mutter: Messing*

550 *PRO*

Ruota traino divisa, stampata
Split drive sprocket, molded / geteiltes Antriebskettenrad, gespritzt



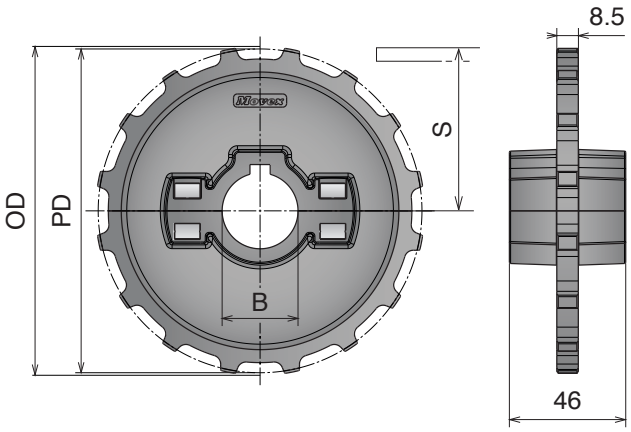

Part	Article-Nr.	Z-	Bore	PD	OD	S
1650	165001	14	25	114,1	114,0	52,7
1650	165002		30			
1650	165003		35			
1650	165004		40			
1650	165006		25* 25 ⍁			
1650	165007		30* 30 ⍁			
1650	165008		40* 40 ⍁			
1651	165101	16	25	130,2	130,0	60,7
1651	165102		30			
1651	165103		35			
1651	165104		40			
1651	165106		25* 25 ⍁			
1651	165107		30* 30 ⍁			
1651	165108		40* 40 ⍁			
1652	165201	18	25	146,3	146,0	68,8
1652	165202		30			
1652	165203		35			
1652	165204		40			
1652	165206		25* 25 ⍁			
1652	165207		30* 30 ⍁			
1652	165208		40* 40 ⍁			
1653	165301	20	25	162,4	162,0	76,8
1653	165302		30			
1653	165303		35			
1653	165304		40			
1653	165306		25* 25 ⍁			
1653	165307		30* 30 ⍁			
1653	165308		40* 40 ⍁			

Ruota rinvio divisa, stampata
Split idler sprocket, molded / geteiltes Umlenkrad, gespritzt



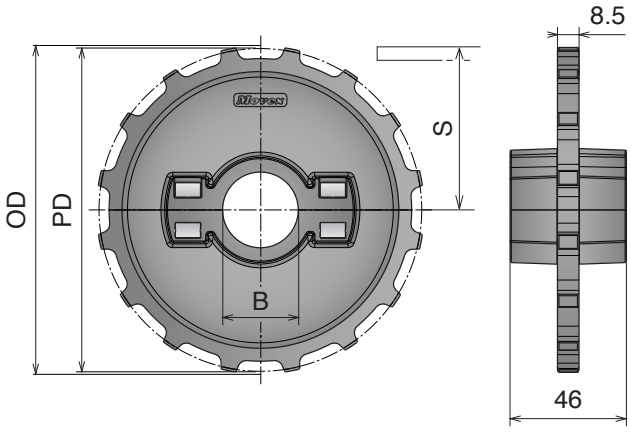

Part	Article-Nr.	Z-	Bore	PD	OD	S
1650	165051	14	25	114,1	114,0	52,7
1650	165052		30			
1650	165053		35			
1650	165054		40			
1651	165151	16	25	130,2	130,0	60,7
1651	165152		30			
1651	165153		35			
1651	165154		40			
1652	165251	18	25	146,3	146,0	68,8
1652	165252		30			
1652	165253		35			
1652	165254		40			
1653	165351	20	25	162,4	162,0	76,8
1653	165352		30			
1653	165353		35			
1653	165354		40			

551 Ruota traino divisa, fresata
Split drive sprocket, machined / geteiltes Antriebskettenrad gefräst



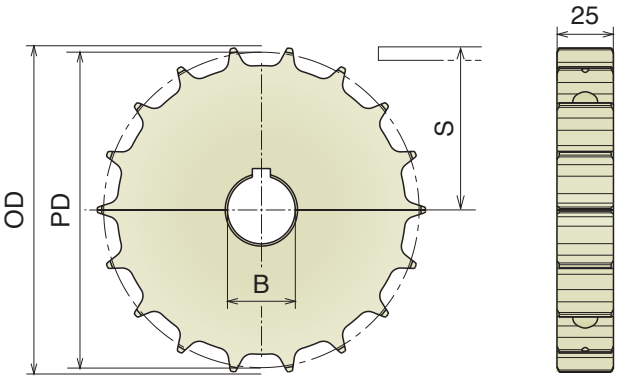

Part	Article-Nr.	Z-	Bore	PD	OD	S
1539	153901	11	25	90,2	92,0	39,7
1539	153902		30			
1539	153903E		35			
1539	153904E		40			
1539	153906		25* 25 ⍁			
1539	153907		30* 30 ⍁			
1539	153908E		40* 40 ⍁			
1531	153101	14	25	114,2	113,5	50,7
1531	153102		30			
1531	153103		35			
1531	153104		40			
1531	153106		25* 25 ⍁			
1531	153107		30* 30 ⍁			
1531	153108		40* 40 ⍁			
1532	153201	16	25	130,2	129,0	58,7
1532	153202		30			
1532	153203		35			
1532	153204		40			
1532	153206		25* 25 ⍁			
1532	153207		30* 30 ⍁			
1532	153208		40* 40 ⍁			
1533	153301	18	25	146,3	145,3	66,7
1533	153302		30			
1533	153303		35			
1533	153304		40			
1533	153306		25* 25 ⍁			
1533	153307		30* 30 ⍁			
1533	153308		40* 40 ⍁			
1534	153401	20	25	162,4	161,7	74,8
1534	153402		30			
1534	153403		35			
1534	153404		40			
1534	153406		25* 25 ⍁			
1534	153407		30* 30 ⍁			
1534	153408		40* 40 ⍁			

Ruota rinvio divisa, fresata
Split idler sprocket, machined / geteiltes Umlenkrad, gefräst



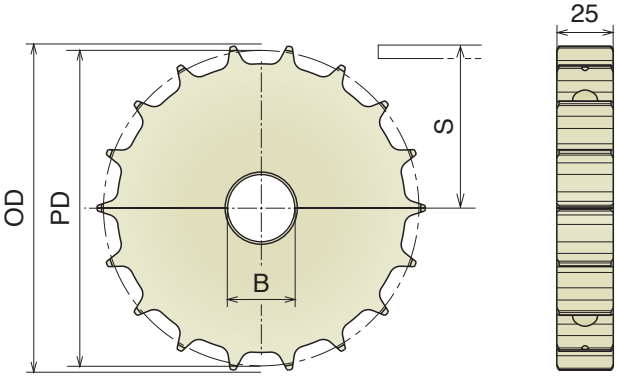

*Plain Bore

Part	Article-Nr.	Z-	Bore	PD	OD	S
1539	153950	11	18*	90,2	92,0	39,7
1539	153951		25			
1539	153952		30			
1539	153953E		35			
1539	153954E		40			
1531	153150	14	18*	114,2	114,0	50,7
1531	153151		25			
1531	153152		30			
1531	153153		35			
1531	153154		40			
1532	153250	16	18*	130,2	129,0	58,7
1532	153251		25			
1532	153252		30			
1532	153253		35			
1532	153254		40			
1533	153350	18	18*	146,3	145,3	66,7
1533	153351		25			
1533	153352		30			
1533	153353		35			
1533	153354		40			
1533	153354		40			
1534	153450	20	18*	162,4	161,7	74,8
1534	153451		25			
1534	153452		30			
1534	153453		35			
1534	153454		40			

*Plain Bore

Materiale / *Material / Materialien:*
Poliammide rinforzato/Polyamide reinforced/Verstärktes Polyamid
Viti: Acciaio inox/*Screws: Stainless steel/Schrauben: Edelstahl*
Dadi: Ottone nichelato/*Nuts: Nickel plated brass/Mutter: Messing*

551 Ruota traino divisa, stampata
Split drive sprocket, molded / geteiltes Antriebskettenrad, gespritzt



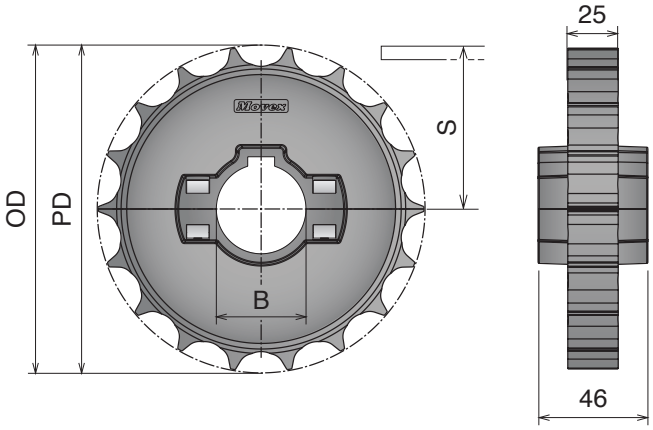

Part	Article-Nr.	Z-	Bore	PD	OD	S
1535	153501	14	25	114,2	113,5	50,7
1535	153502		30			
1535	153503		35			
1535	153504		40			
1535	153506		25* 25 ⏍			
1535	153507		30* 30 ⏍			
1535	153508		40* 40 ⏍			
1536	153601	16	25	130,2	129,0	58,7
1536	153602		30			
1536	153603		35			
1536	153604		40			
1536	153606		25* 25 ⏍			
1536	153607		30* 30 ⏍			
1536	153608		40* 40 ⏍			
1537	153701	18	25	146,3	145,3	66,7
1537	153702		30			
1537	153703		35			
1537	153704		40			
1537	153706		25* 25 ⏍			
1537	153707		30* 30 ⏍			
1537	153708		40* 40 ⏍			
1538	153801	20	25	162,4	161,7	74,8
1538	153802		30			
1538	153803		35			
1538	153804		40			
1538	153806		25* 25 ⏍			
1538	153807		30* 30 ⏍			
1538	153808		40* 40 ⏍			

Ruota rinvio divisa, stampata
Split idler sprocket, molded / geteiltes Umlenkrad, gespritzt



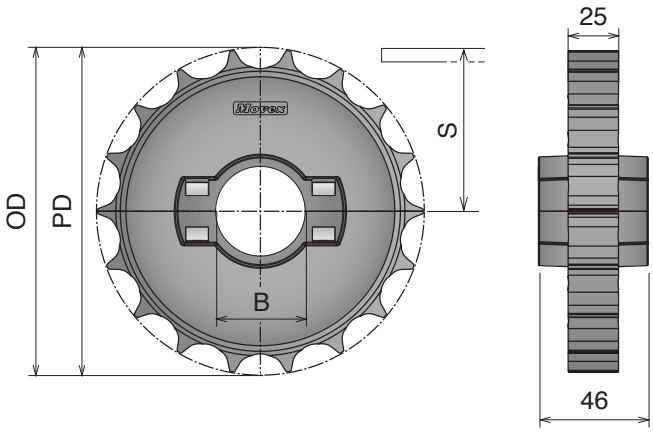

Part	Article-Nr.	Z-	Bore	PD	OD	S
1535	153551	14	25	114,2	113,5	50,7
1535	153552		30			
1535	153553		35			
1535	153554		40			
1536	153651	16	25	130,2	129,0	58,7
1536	153652		30			
1536	153653		35			
1536	153654		40			
1537	153751	18	25	146,3	145,3	66,7
1537	153752		30			
1537	153753		35			
1537	153754		40			
1538	153851	20	25	162,4	161,7	74,8
1538	153852		30			
1538	153853		35			
1538	153854		40			

Materiale / *Material* / *Materialien:*
Poliammide/*Polyamide/Polyamid*
Viti: Acciaio inox/*Screws: Stainless steel/Schrauben: Edelstahl*
Dadi: ferro zincato/*Nuts: zinc plated steel/Mutter: verzinkter Stahl*

552 Ruota traino divisa, fresata
Split drive sprocket, machined / geteiltes Antriebskettenrad gefräst



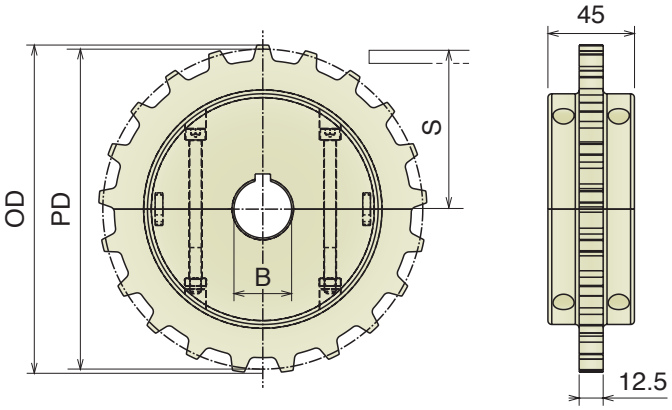

Part	Article-Nr.	Z-	Bore	PD	OD	S
1611	161101	16	25	130,2	130,6	58,7
1611	161102		30			
1611	161103		35			
1611	161104		40			
1611	161106		25* 25 ⎅			
1611	161107		30* 30 ⎅			
1611	161108		40* 40 ⎅			
1612	161201	18	25	146,3	146,9	66,8
1612	161202		30			
1612	161203		35			
1612	161204		40			
1612	161206		25* 25 ⎅			
1612	161207		30* 30 ⎅			
1612	161208		40* 40 ⎅			
1613	161301	21	25	170,4	170,7	78,8
1613	161302		30			
1613	161303		35			
1613	161304		40			
1613	161306		25* 25 ⎅			
1613	161307		30* 30 ⎅			
1613	161308		40* 40 ⎅			
1614	161401	25	25	202,7	204,2	95,0
1614	161402		30			
1614	161403		35			
1614	161404		40			
1614	161406		25* 25 ⎅			
1614	161407		30* 30 ⎅			
1614	161408		40* 40 ⎅			

Ruota rinvio divisa, fresata
Split idler sprocket, machined / geteiltes Umlenkrad, gefräst



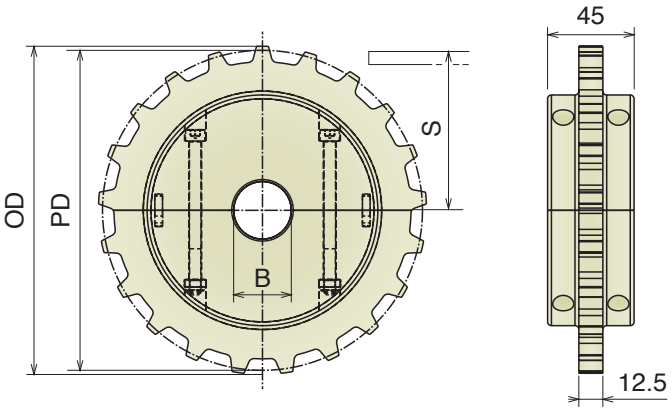

Part	Article-Nr.	Z-	Bore	PD	OD	S
1611	161150	16	18*	130,2	130,6	58,7
1611	161151		25			
1611	161152		30			
1611	161153		35			
1611	161154		40			
1612	161250	18	18*	146,3	146,9	66,8
1612	161251		25			
1612	161252		30			
1612	161253		35			
1612	161254		40			
1613	161350	21	18*	170,4	170,7	78,8
1613	161351		25			
1613	161352		30			
1613	161353		35			
1613	161354		40			
1614	161450	25	18*	202,7	204,2	95,0
1614	161451		25			
1614	161452		30			
1614	161453		35			
1614	161454		40			

Materiale / *Material* / *Materialien:*
Poliammide/*Polyamide/Polyamid*
Viti: Acciaio inox/*Screws: Stainless steel/Schrauben: Edelstahl*
Dadi: ferro zincato/*Nuts: zinc plated steel/Mutter: verzinkter Stahl*

556 Ruota traino divisa, fresata
Split drive sprocket, machined / geteiltes Antriebskettenrad gefräst



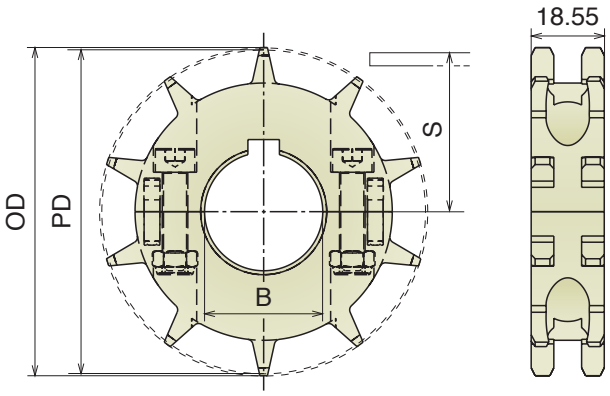

Part	Article-Nr.	Z-	Bore	PD	OD	S
1620	162001	10	25	82,2	83,3	33,0
1620	162002		30			
1620	162003E		35			
1620	162004E		40			
1620	162006		25* 25 ⍁			
1620	162007		30* 30 ⍁			
1620	162008E		40* 40 ⍁			
1621	162101	12	25	98,1	100,0	41,0
1621	162102		30			
1621	162103		35			
1621	162104		40			
1621	162106		25* 25 ⍁			
1621	162107		30* 30 ⍁			
1621	162108E		40* 40 ⍁			
1622	162201	15	25	122,2	124,3	53,0
1622	162202		30			
1622	162203		35			
1622	162204		40			
1622	162206		25* 25 ⍁			
1622	162207		30* 30 ⍁			
1622	162208		40* 40 ⍁			
1623	162301	18	25	146,3	147,8	65,0
1623	162302		30			
1623	162303		35			
1623	162304		40			
1623	162306		25* 25 ⍁			
1623	162307		30* 30 ⍁			
1623	162308		40* 40 ⍁			

Ruota rinvio divisa, fresata
Split idler sprocket, machined / geteiltes Umlenkrad, gefräst



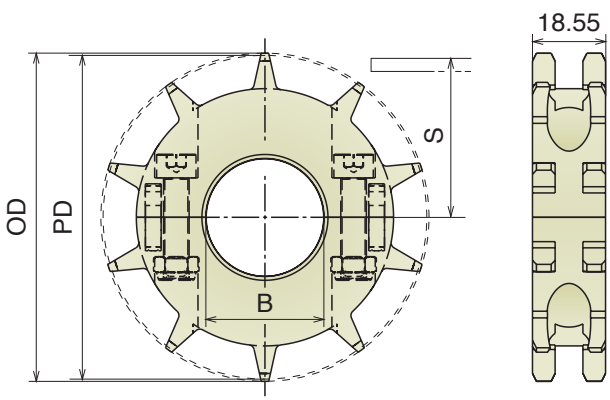

Part	Article-Nr.	Z-	Bore	PD	OD	S
1620	162050	10	18*	82,2	83,3	33,0
1620	162051		25			
1620	162052		30			
1620	162053E		35			
1620	162054E		40			
1621	162150	12	18*	98,1	100,0	41,0
1621	162151		25			
1621	162152		30			
1621	162153		35			
1621	162154		40			
1622	162250	15	18*	122,2	124,3	53,0
1622	162251		25			
1622	162252		30			
1622	162253		35			
1622	162254		40			
1623	162350	18	18*	146,3	147,8	65,0
1623	162351		25			
1623	162352		30			
1623	162353		35			
1623	162354		40			

Materiale / *Material / Materialien:*
Poliammide/*Polyamide/Polyamid*
Viti: Acciaio inox/*Screws: Stainless steel/Schrauben: Edelstahl*
Dadi: ferro zincato/*Nuts: zinc plated steel/Mutter: verzinkter Stahl*

260-261

Ruota traino divisa, fresata
Split drive sprocket, machined / geteiltes Antriebskettenrad gefräst



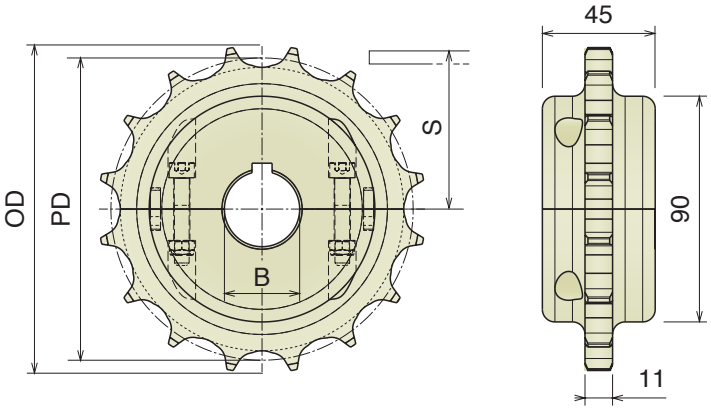

Part	Article-Nr.	Z-	Bore	PD	OD	S
1541	154101	16	25	128,9	130,9	67,8
1541	154102		30			
1541	154103		35			
1541	154104		40			
1542	154201	18	25	144,8	146,8	75,7
1542	154202		30			
1542	154203		35			
1542	154204		40			
1543	154301	19	25	154,3	156,3	80,5
1543	154302		30			
1543	154303		35			
1543	154304		40			

Ruota rinvio divisa, fresata
Split idler sprocket, machined / geteiltes Umlenkrad, gefräst



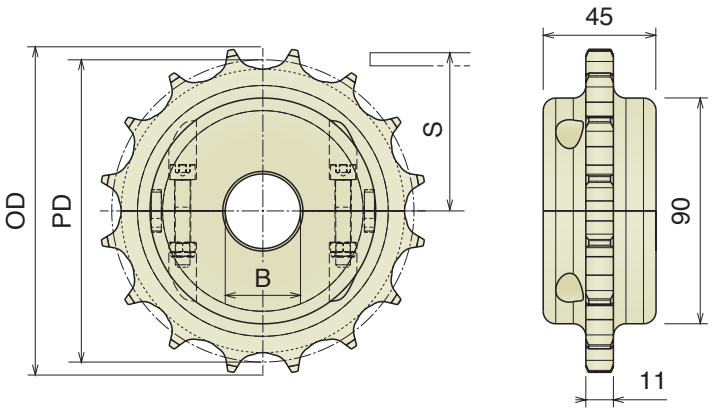

Part	Article-Nr.	Z-	Bore	PD	OD	S
1541	154150	16	18*	128,9	130,9	67,8
1541	154151		25			
1541	154152		30			
1541	154153		35			
1541	154154		40			
1542	154250	18	18*	144,8	146,8	75,7
1542	154251		25			
1542	154252		30			
1542	154253		35			
1542	154254		40			
1543	154350	19	18*	154,3	156,3	80,5
1543	154351		25			
1543	154352		30			
1543	154353		35			
1543	154354		40			

*Plain Bore

Materiale / *Material / Materialien:*
Poliammide rinforzato/Polyamide reinforced/Verstärktes Polyamid
Viti: Acciaio inox/*Screws: Stainless steel/Schrauben: Edelstahl*
Dadi: Ottone nichelato/*Nuts: Nickel plated brass/Mutter: Messing*

260-261

Ruota traino divisa, stampata
Split drive sprocket, molded / geteiltes Antriebskettenrad, gespritzt



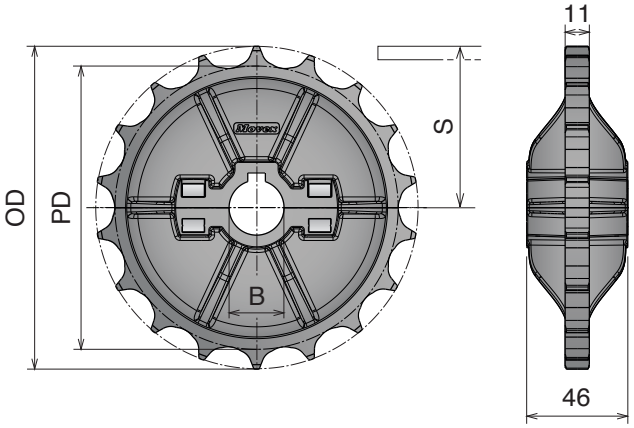

Part	Article-Nr.	Z-	Bore	PD	OD	S
1545	154501	16	25	128,9	130,9	67,8
1545	154502		30			
1545	154503		35			
1545	154504		40			
1545	154506		25* 25 ⏍			
1545	154507		30* 30 ⏍			
1545	154508		40* 40 ⏍			
1546	154601	18	25	144,8	146,8	75,7
1546	154602		30			
1546	154603		35			
1546	154604		40			
1546	154606		25* 25 ⏍			
1546	154607		30* 30 ⏍			
1546	154608		40* 40 ⏍			
1547	154701	19	25	154,3	156,3	80,5
1547	154702		30			
1547	154703		35			
1547	154704		40			
1547	154706		25* 25 ⏍			
1547	154707		30* 30 ⏍			
1547	154708		40* 40 ⏍			

Improved Design and Performance

Ruota rinvio divisa, stampata
Split idler sprocket, molded / geteiltes Umlenkrad, gespritzt



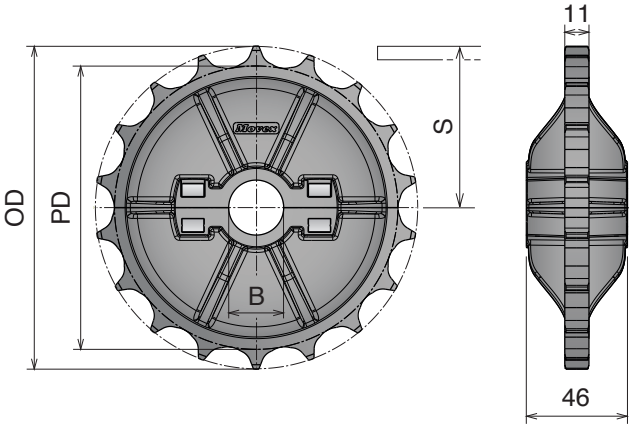

Part	Article-Nr.	Z-	Bore	PD	OD	S
1545	154551	16	25	128,9	130,9	67,8
1545	154552		30			
1545	154553		35			
1545	154554		40			
1546	154651	18	25	144,8	146,8	75,7
1546	154652		30			
1546	154653		35			
1546	154654		40			
1547	154751	19	25	154,3	156,3	80,5
1547	154752		30			
1547	154753		35			
1547	154754		40			

Improved Design and Performance

Materiale / *Material* / *Materialien:*
Poliammide/*Polyamide/Polyamid*
Viti: Acciaio inox/*Screws: Stainless steel/Schrauben: Edelstahl*
Dadi: ferro zincato/*Nuts: zinc plated steel/Mutter: verzinkter Stahl*

600 Ruota traino divisa, fresata
Split drive sprocket, machined / geteiltes Antriebskettenrad gefräst



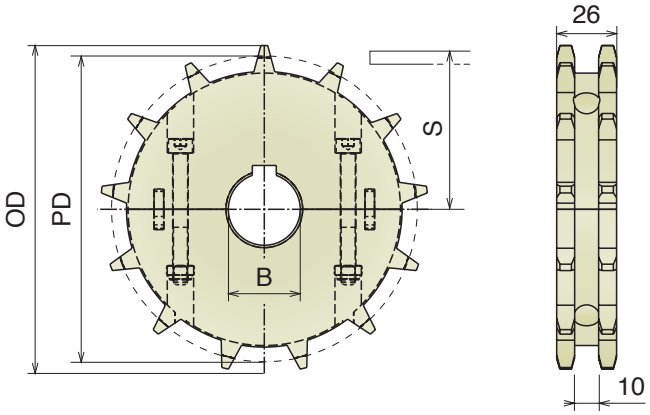

Part	Article-Nr.	Z-	Bore	PD	OD	S
1571	157101	10	25	102,8	107,7	45,0
1571	157102		30			
1571	157103		35			
1571	157104		40			
1572	157201	13	25	132,7	138,8	60,0
1572	157202		30			
1572	157203		35			
1572	157204		40			
1573	157301	15	25	152,7	159,4	70,0
1573	157302		30			
1573	157303		35			
1573	157304		40			
1574	157401	16	25	162,8	169,6	75,0
1574	157402		30			
1574	157403		35			
1574	157404		40			

Ruota rinvio divisa, fresata
Split idler sprocket, machined / geteiltes Umlenkrad, gefräst



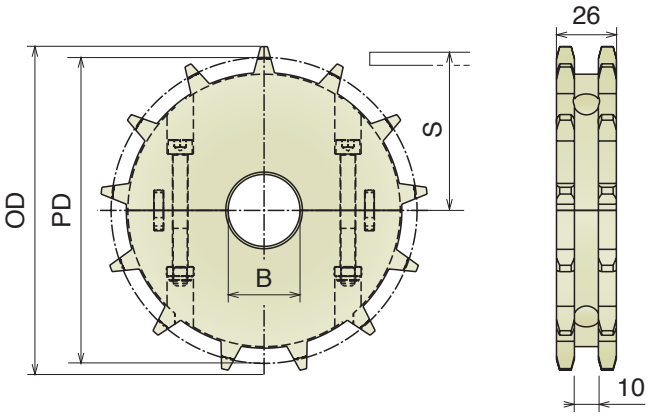

Part	Article-Nr.	Z-	Bore	PD	OD	S
1571	157150	10	18*	102,8	107,7	45,0
1571	157151		25			
1571	157152		30			
1571	157153		35			
1571	157154		40			
1572	157250	13	18*	132,7	138,8	60,0
1572	157251		25			
1572	157252		30			
1572	157253		35			
1572	157254		40			
1573	157350	15	18*	152,7	159,4	70,0
1573	157351		25			
1573	157352		30			
1573	157353		35			
1573	157354		40			
1574	157450	16	18*	162,8	169,6	75,0
1574	157451		25			
1574	157452		30			
1574	157453		35			
1574	157454		40			

*Plain Bore

Materiale / *Material* / *Materialien:*
Poliammide/*Polyamide*/*Polyamid*

ZERO CONTACT

Ruota traino, fresata
Drive sprocket, machined / Antriebskettenrad gefräst

New

Part	Article-Nr.	Z-	Bore	R min.	Pitch Diam.	Ext. Diam.	S
1624	162401	12	40	650	58,0	61,0	25,6
1624	162402			750	66,0	69,0	29,9
1624	162403			850	76,0	79,0	34,2
1624	162404			950	84,0	86,0	38,5
1624	162405			1050	94,0	97,0	42,8
1624	162406			1150	102,0	104,0	47,1
1624	162407			1250	112,0	114,0	51,4
1624	162408			1350	119,0	122,0	55,7
1624	162409			1450	130,0	132,0	60,0
1624	162410			1550	137,0	140,0	64,3



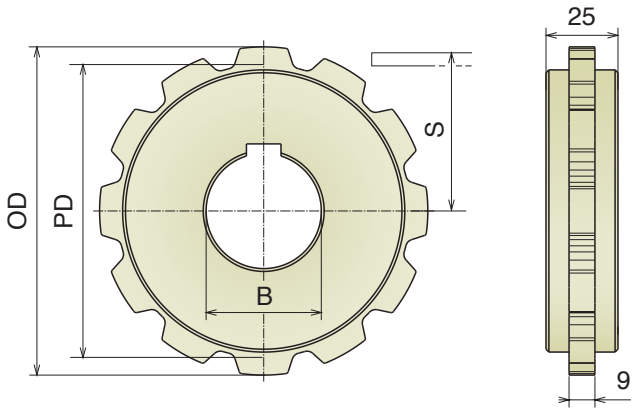

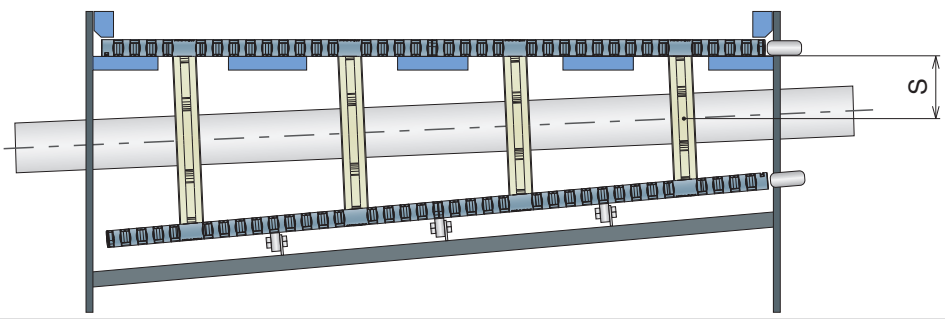

Materiale / *Material* / *Materialien:*
Poliammide/*Polyamide/Polyamid*
Viti: Acciaio inox/*Screws: Stainless steel/Schrauben: Edelstahl*
Dadi: ferro zincato/*Nuts: zinc plated steel/Mutter: verzinkter Stahl*

ZERO CONTACT PRO

Ruota traino, fresata
Drive sprocket, machined / Antriebskettenrad gefräst

New



Part	Article-Nr.	Z-	Bore	Ext. Diam.
1633	163301	13	30	45,9
1633	163302		40	52,0
1633	163303			58,0
1633	163304			64,1
1633	163305			70,2
1633	163306			76,2
1633	163307			82,3
1633	163308			88,3
1633	163309			94,4
1633	163310			100,5
1633	163311			106,6
1633	163312			112,6
1633	163313			118,7
1633	163314			124,7
1633	163315			130,8
1633	163316			136,9
1633	163317			142,9

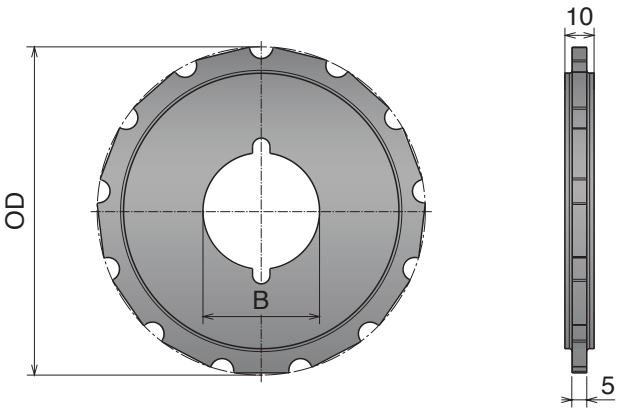

Materiale / *Material / Materialien:*
Poliammide/*Polyamide/Polyamid*
Viti: Acciaio inox/*Screws: Stainless steel/Schrauben: Edelstahl*
Dadi: ferro zincato/*Nuts: zinc plated steel/Mutter: verzinkter Stahl*

500 RR

Ruota traino, stampata
Drive sprocket, molded / Antriebskettenrad, gespritzt



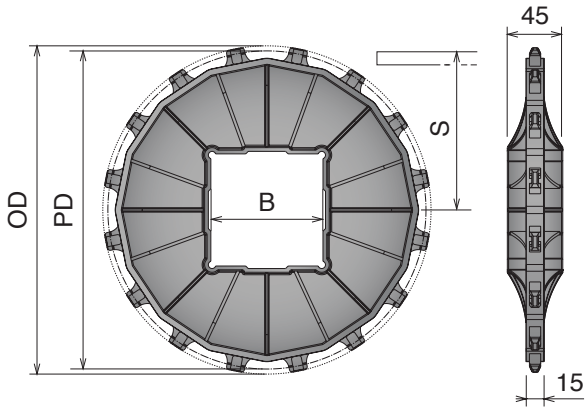

Part	Article-Nr.	Z-	Bore	PD	OD	S
1551	155104	10	Ø40	164,4	163,1	74,2
1551	155105		Ø50			
1551	155106		40x40			
1551	155107		60x60			
1551	155108		65x65			
1552	155204	12	Ø40	196,3	196,3	90,1
1552	155206		40x40			
1552	155207		60x60			
1552	155208		65x65			
1553	155311	13	Ø65	212,3	209,0	98,1
1553	155310		Ø90			
1553	155306		40x40			
1553	155307		60x60			
1553	155308		65x65			
1553	155309		90x90			
1559	155910	16	Ø90	260,4	262,0	122,3
1559	155905		Ø2,5"			
1559	155908		65x65			
1559	155909		90x90			
1559	155912		120x120			

Ruota traino, fresata
Drive sprocket, machined / Antriebskettenrad gefräst



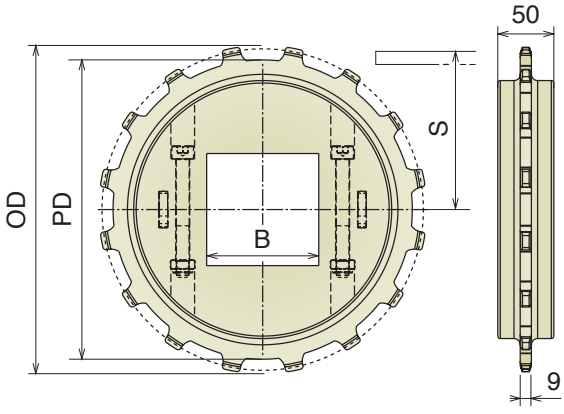

Part	Article-Nr.	Z-	Bore	PD	OD	S
1607	160704	10	Ø40	164,4	163,1	74,2
1607	160705		Ø50			
1607	160706		40x40			
1607	160707		60x60			
1607	160708		65x65			
1608	160804	12	Ø40	196,3	196,3	90,1
1608	160806		40x40			
1608	160807		60x60			
1608	160808		65x65			
1609	160911	13	Ø65	212,3	209,0	98,1
1609	160910		Ø90			
1609	160906		40x40			
1609	160907		60x60			
1609	160908		65x65			
1609	160909		90x90			
1610	161010	16	Ø90	260,4	262,0	122,3
1610	161005		Ø2,5"			
1610	161008		65x65			
1610	161009		90x90			
1610	161012		120x120			

Materiale / *Material / Materialien:*
Resina acetalica/*Acetal resin/Azetal*
Viti: Acciaio inox/*Screws: Stainless steel/Schrauben: Edelstahl*
Dadi: Acciaio inox/*Nuts: Stainless steel/Mutter: Edelstahl*

500 RR *Split Version*

Ruota traino, stampata/*Drive sprocket, molded / Antriebskettenrad, gespritzt*

Part	Article-Nr.	Z-	Bore
1558	155810	16	Ø 90 with double keyway



Advantages:

- Easy Clean
- Easy installation
- Heavy duty design



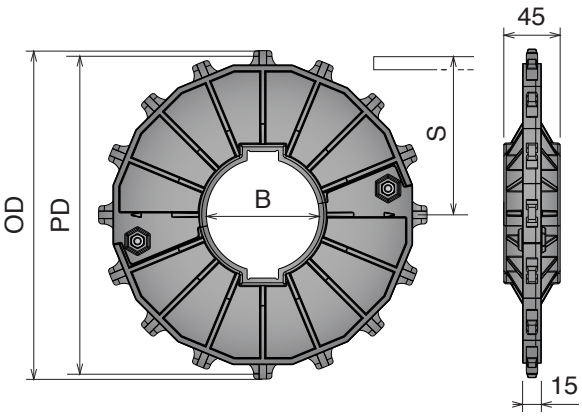

Ruota rinvio divisa, stampata
Split idler sprocket, molded / geteiltes Umlenkrad, gespritzt

Part	Article-Nr.	Z-	Bore (B)	Bore (B_1 x B_1)
1558	155809	16	Ø 100	90 x 90

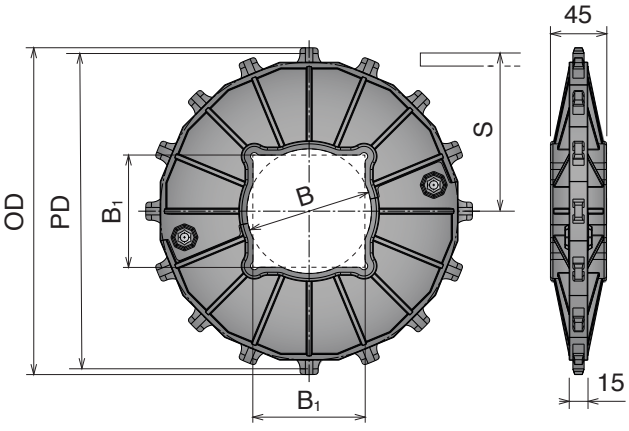

BluLub®

Enhanced – Performance – UHMW-PE

BluLub è un nuovo materiale ad alte prestazioni composto da lubrificanti solidi di ultima generazione UHMW-PE. **BluLub** migliora il limite PV rispetto allo standard UHMW-PE, soprattutto nelle applicazioni dove la lubrificazione è limitata o assente e le velocità e/o i carichi sono elevati. **BluLub** ti fa consumare meno energia e con un basso coefficiente di attrito, migliora la stabilità del prodotto, l'usura della catene e de nastri modulari allungandone la vita utile.

__BluLub__ is a new high-performance compounded UHMW-PE material with the latest generation of solid lubricants. __BluLub__ contributes to improve PV-properties compared to standard UHMW-PE, especially in applications with limited lubrication, higher speeds and/or higher loads. __BluLub__ requires less energy and with the lower coefficient of friction, improves the product stability and wear life of chains and modular belts.

__BluLub__ ist ein neues High-Performance UHMW-PE Material mit der neuesten Generation von festen Schmierstoffen. __BluLub__ trägt dazu bei die PV-Eigenschaften im Vergleich zu Standard-UHMW-PE zu verbessern, vor allem in Anwendungen mit begrenzter Schmierung, höheren Geschwindigkeiten und / oder höheren Lasten. Mit __BluLub__ wird weniger Energie benötigt. Mit dem niedrigeren Reibungskoeffizienten, verbessert sich die Produktstabilität. Die Standzeiten von Ketten und Modulbändern werden erhöht.

Properties:

- ***UHMW-PE Polyethylene with molecular density 5,600,000 g/mol or 9,200,000 g/mol.***
- ***Operating temperature: -40 to 176°F (-40 to + 80°C)***
- ***BluLub complies with the Code of Federal Regulations of FDA***

Advantages:

- ***Running dry***
- ***High speed***
- ***Reduced noise and squeaking***
- ***Lower Coefficient of Friction***
- ***Lower wear***
- ***Less energy consumption***
- ***Minimal moisture absorption***
- ***Smooth and quite chain running***

Vorteile

- ***Trockenlauf***
- ***Hohe Geschwindigkeit***
- ***Reduzierte Geräuschentwicklung und kein "Quietschen"***
- ***Niedrigerer Reibwert***
- ***Geringerer Verschleiß***
- ***Weniger Energieverbrauch***
- ***Minimale Feuchtigkeitsaufnahme***
- ***Ruhiger Lauf der Kette***

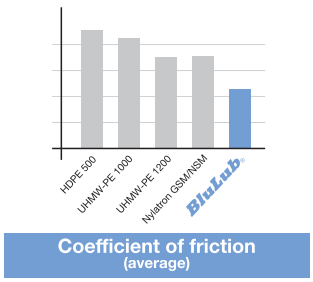

Coefficient of friction
(average)

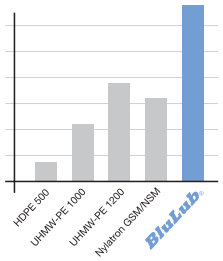

Relative wearlife

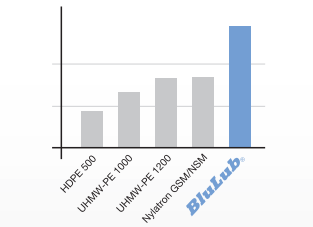

Max speed
max. recommended surface speed (dry-acetal LF chain)

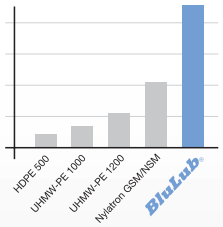

PV-limit

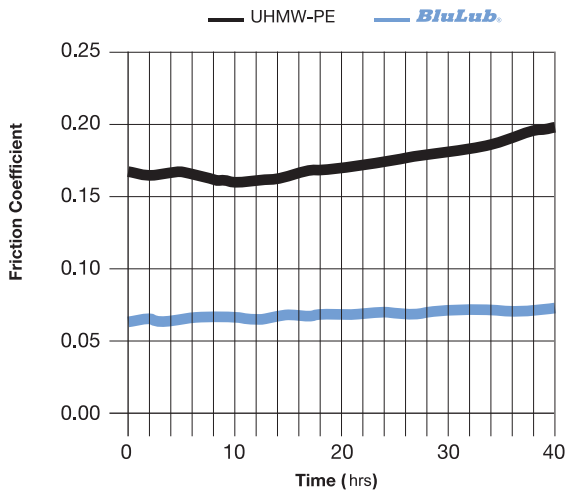

Less Friction Compared to UHMW-PE

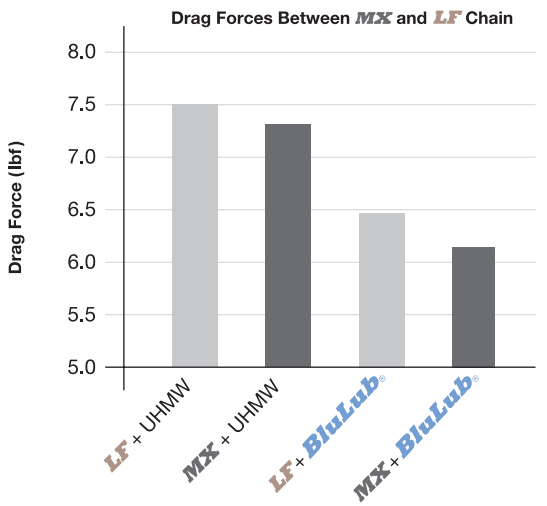

Chain / Wear Strip Configuration

289



Extruded Profiles

Z-Profile

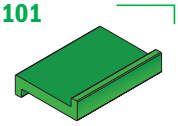
101 Pag 293

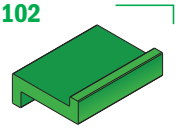
102 Pag 293

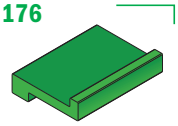
176 Pag 293

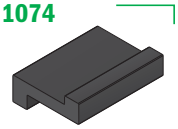
1074 Pag 293

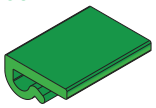
103 Pag 294

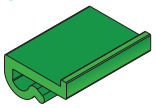
104 Pag 294

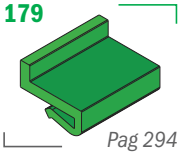
179 Pag 294

L-Profile

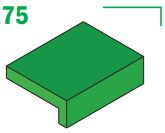
175 Pag 294

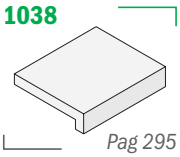
1038 Pag 295

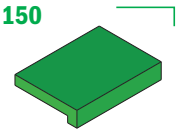
150 Pag 295

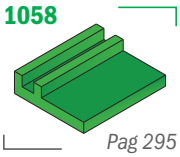
1058 Pag 295

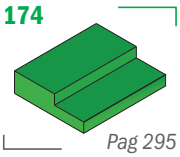
174 Pag 295

J-Profile

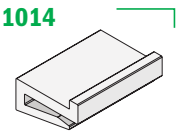
1014 Pag 296

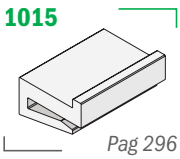
1015 Pag 296

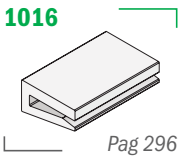
1016 Pag 296

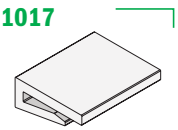
1017 Pag 296

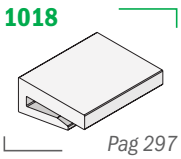
1018 Pag 297

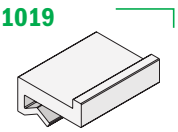
1019 Pag 297

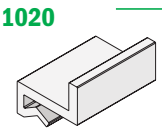
1020 Pag 297

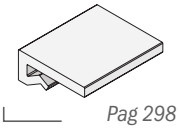
1021 Pag 298

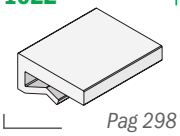
1022 Pag 298

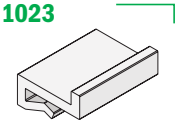
1023 Pag 298

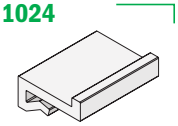
1024 Pag 298

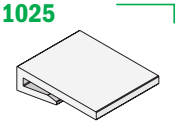
1025 Pag 299

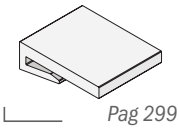
1026 Pag 299

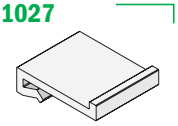
1027 Pag 299

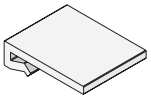
1028 Pag 299

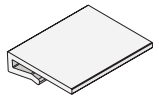
1046 Pag 300

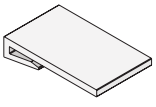
1029 Pag 300

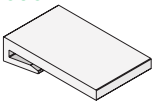
1030 Pag 300

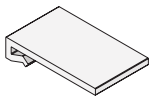
1031 Pag 300

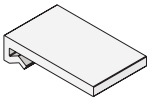
1032 Pag 301

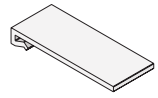
1033 Pag 301

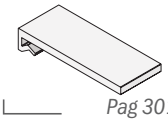
1034 Pag 301

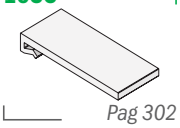
1035 Pag 302

Flat profile

105

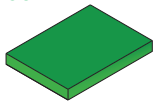

Pag 302

106

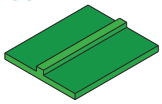

Pag 302

Wear strip

107

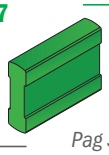

Pag 303

T-profile

108

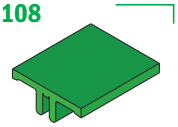

Pag 303

Flat clip-on

109

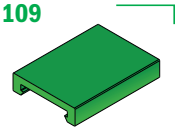

Pag 303

110

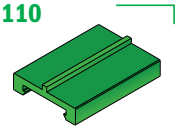

Pag 304

156

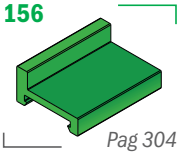

Pag 304

Stainless steel profile

112

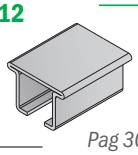

Pag 304

Aluminum profile

147

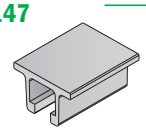

Pag 305

Profile assembled clip-on

133

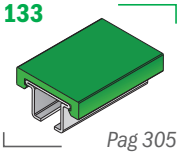

Pag 305

148

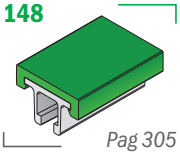

Pag 305

157

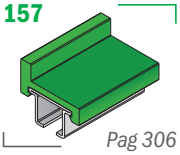

Pag 306

Bar cover

180

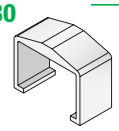

Pag 310

181

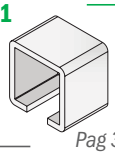

Pag 310

1052

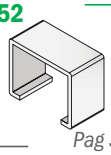

Pag 310

D- Profile and U-profile

118

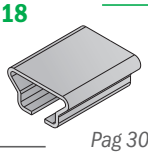

Pag 306

149

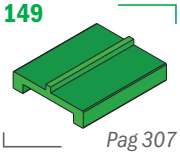

Pag 307

177

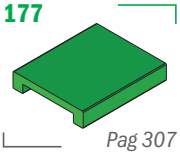

Pag 307

1059

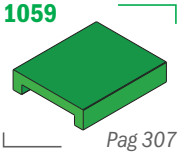

Pag 307

178

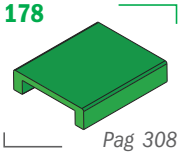

Pag 308

111

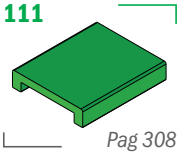

Pag 308

1060

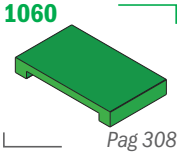

Pag 308

199

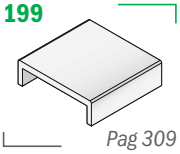

Pag 309

U-PROFILE

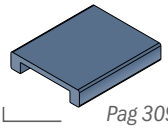

Pag 309

U-PROFILE SV

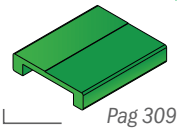

Pag 309

Bar cap

1000

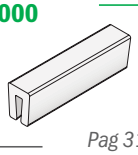

Pag 311

1001

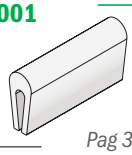

Pag 311

1002

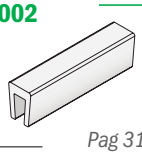

Pag 311

1003

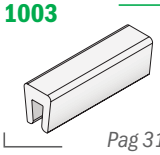

Pag 311

1004

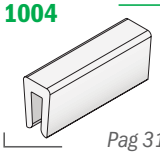

Pag 312

1006

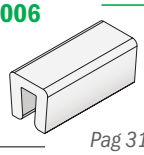

Pag 312

153

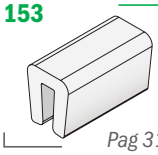

Pag 312

1007

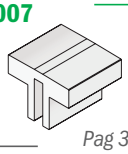

Pag 313

1008

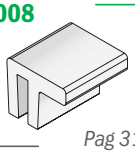

Pag 313

1009

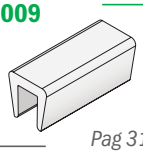

Pag 313

1010

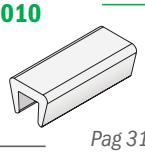

Pag 313

1011

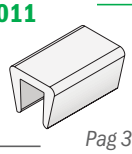

Pag 314

1012

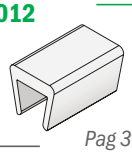

Pag 314

1013

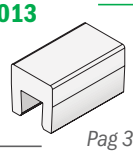

Pag 314

Belt side guide

1040

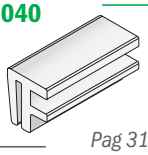

Pag 314

Guide rail

119

Pag 315

120

Pag 315

121

Pag 315

152

Pag 316

1067

Pag 316

Guide rail T-shape

122
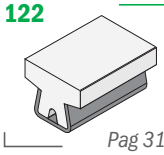
Pag 316

123
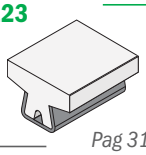
Pag 317

140
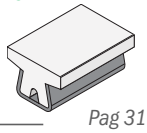
Pag 317

146
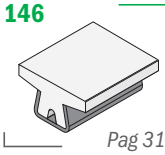
Pag 317

124
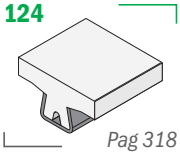
Pag 318

143
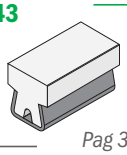
Pag 318

141
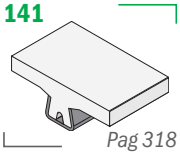
Pag 318

142
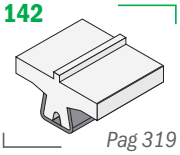
Pag 319

Guide rail L-shape

125
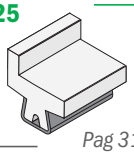
Pag 319

144
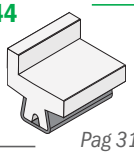
Pag 319

Guide rail for chain and Guide rail for label protection

184
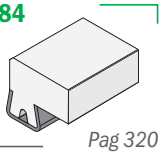
Pag 320

191
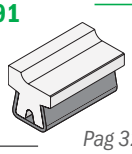
Pag 320

Belt side guide

145
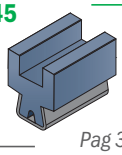
Pag 320

Aluminum rail for bottle guide

130
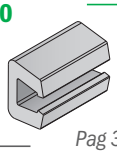
Pag 321

188
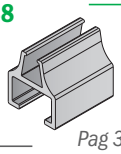
Pag 321

Plastic rail for bottle guide

131
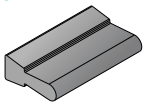
Pag 321

Bending machine and Roller

199

Pag 321

151

Pag 322/323

Neck guide

170
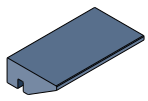
Pag 324

168
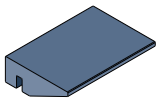
Pag 324

169
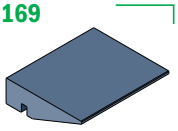
Pag 324

1036
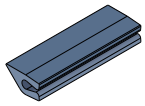
Pag 324

1037
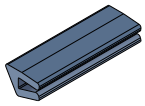
Pag 325

167
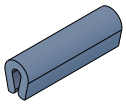
Pag 325

171
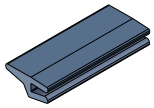
Pag 325

172
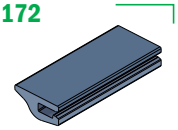
Pag 325

173
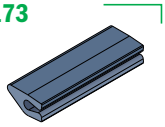
Pag 326

192
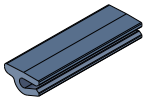
Pag 326

1062
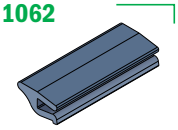
Pag 326

1068
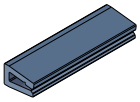
Pag 326

1072
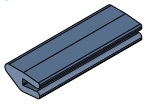
Pag 327

1073
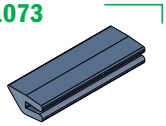
Pag 327

Profile for aluminum guide

163
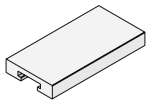
Pag 328

160
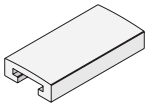
Pag 328

161
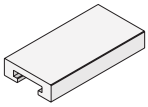
Pag 328

162
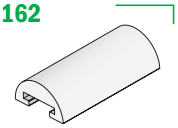
Pag 329

Aluminum guide

164
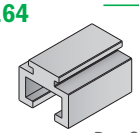
Pag 329

165
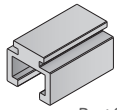
Pag 329

Side and Standard guide rail

154
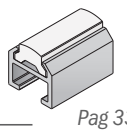
Pag 330

155
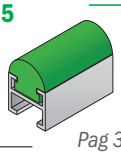
Pag 330

134

Pag 330

C-Profile

1041
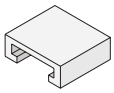
Pag 331

1042
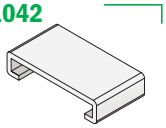
Pag 331

1043
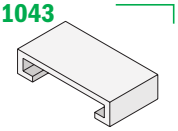
Pag 331

1044
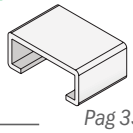
Pag 332

1045
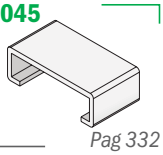
Pag 332

137
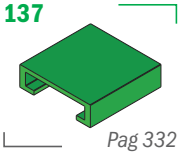
Pag 332

137
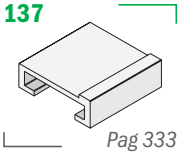
Pag 333

Bar cover

1053
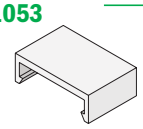
Pag 332

1054
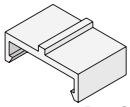
Pag 333

Stainless steel guide

117
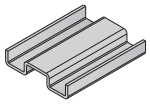
Pag 334

1055
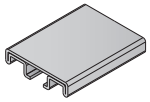
Pag 334

Aluminum guide

159
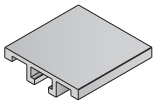
Pag 334

Side guide rail

135

Pag 335

136

Pag 335

1063

Pag 336

1064

Pag 336

158
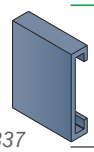
Pag 337

158
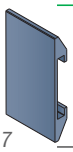
Pag 337

182
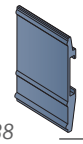
Pag 338

1065
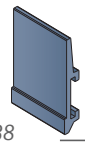
Pag 338

189
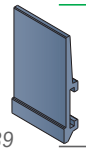
Pag 339

189
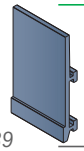
Pag 339

193
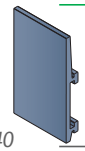
Pag 340

187
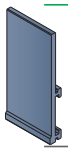
Pag 340

1056
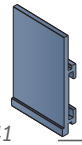
Pag 341

1057
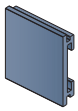
Pag 341

186
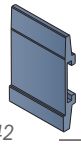
Pag 342

1061
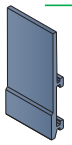
Pag 342

183
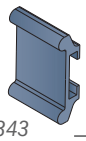
Pag 343

Profile for steel rods

166
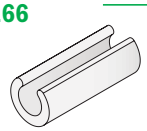
Pag 343

1039
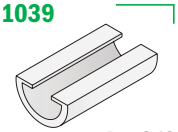
Pag 343

Central wear strip shoe

113

Pag 344

113

Pag 344

Side transfer guide shoe

116

Pag 345

116

Pag 345

Fixing clamp

114

Pag 344

Connecting element

115

Pag 345

Material:
Polyethylene UHMW-PE with molecular density 5,600,000 g/mol
Linear expansion coefficient: $1.1x10^{-4}$ °F^{-1} ($2x10^{-4}$ °C^{-1})
Operating temperature: -40 to 176°F (-40 to +80°C)

101

Profilo "Z" / *Z-Profile / Z-Profil*

On request available in white color

Part	Article-Nr.	Colour	Availability	Supply
101	10101	black	Stock item	60 m coils
101	10102	green	Stock item	60 m coils

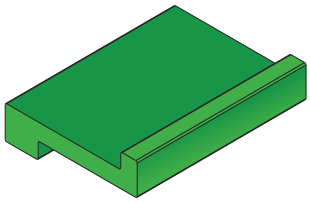

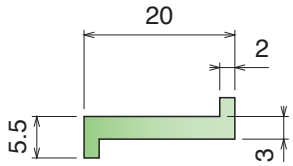

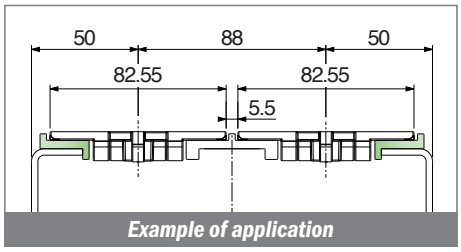

Example of application

102

Profilo Z-clip senza bordo / *Z-clip profile without nose / Z Profil ohne Nase*

On request available in white color

Part	Article-Nr.	Colour	Availability	Supply
102	10201	black	Stock item	60 m coils
102	10202	green	Stock item	60 m coils
102	10299B	BluLub	Stock item	60 m coils

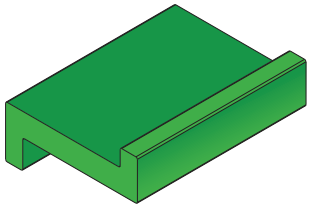

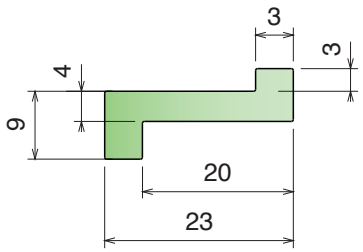

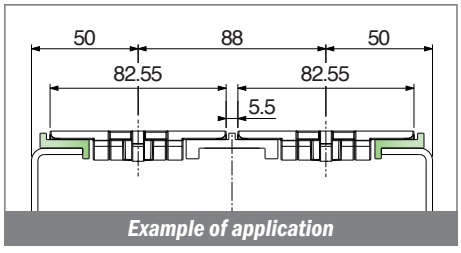

Example of application

176

Profilo "Z" / *Z-Profile / Z-Profil*

On request available in white color

Part	Article-Nr.	Colour	Availability	Supply
176	17601	black	Stock item	60 m coils
176	17602	green	Stock item	60 m coils

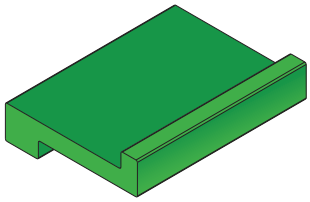

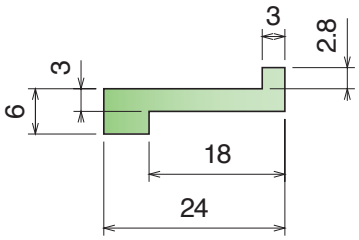

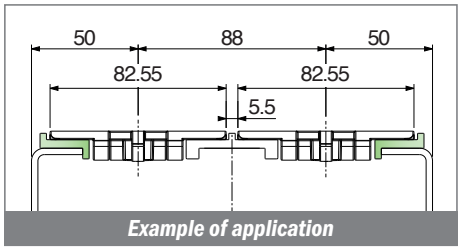

Example of application

1074

Profilo "Z" / *Z-Profile / Z-Profil*

On request available in white color

Part	Article-Nr.	Colour	Availability	Supply
1074	107401	black	Stock item	60 m coils

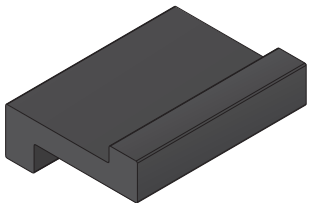

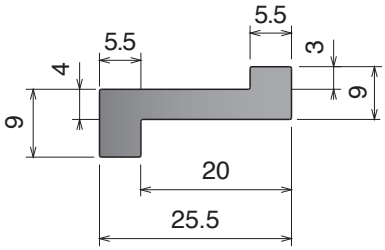

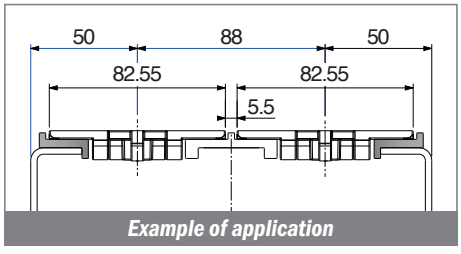

Example of application

103-104-179-175

Guide estruse / *Extruded profiles / Extrudiertes profil*

Material:
Polyethylene UHMW-PE with molecular density 5,600,000 g/mol
Linear expansion coefficient: $1.1x10^{-4}$ °F^{-1} ($2x10^{-4}$ °C^{-1})
Operating temperature: -40 to 176°F (-40 to +80°C)

103

Profilo Z-clip senza bordo / *Z-clip profile without nose / Z Profil ohne Nase*

Fit on 2,5 to 3,5 mm

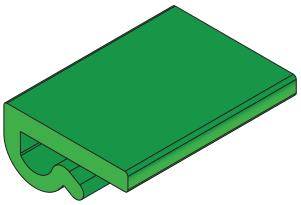

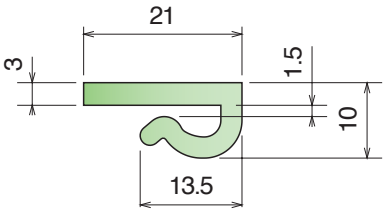

Part	Article-Nr.	Colour	Availability	Supply
103	10301	black	Stock item	60 m coils
103	10302	green	Stock item	60 m coils
103	10303	white	Stock item	60 m coils
103	10300B-30	BluLub	Stock item	30 m coils

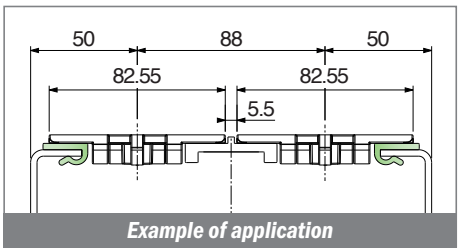

Example of application

104

Profilo Z-clip con bordo / *Z-clip profile with nose / Z Profil mit Nase*

Fit on 2,5 to 3,5 mm

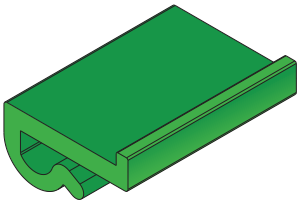

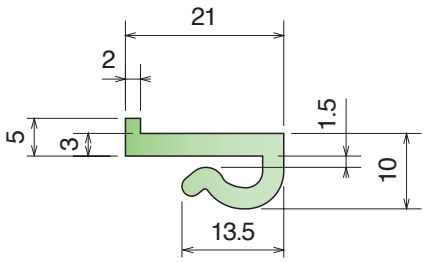

Part	Article-Nr.	Colour	Availability	Supply
104	10401	black	Stock item	60 m coils
104	10402	green	Stock item	60 m coils
104	10403	white	Stock item	60 m coils
103	10400B	BluLub	Stock item	30 m coils

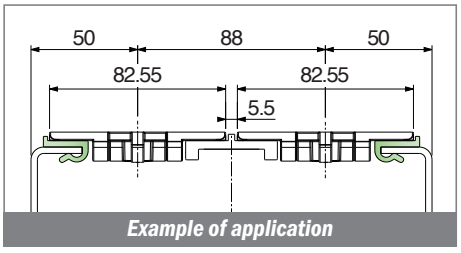

Example of application

179

Profilo Z-clip con bordo / *Z-clip profile with nose / Z Profil mit Nase*

On request available in white color | Fit on 2,5 to 3,5 mm

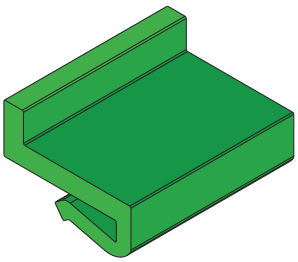

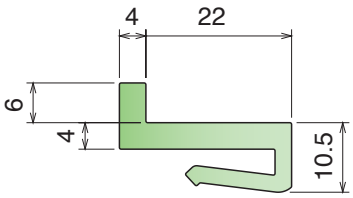

Part	Article-Nr.	L	Colour	Availability	Supply
179	17901C	3 m	black	Stock item	3 m bars
179	17901	6 m	black	On request	6 m bars
179	17902C	3 m	green	Stock item	3 m bars
179	17902	6 m	green	On request	6 m bars
179	17902-60	60 m	green	Stock item	60 m coils

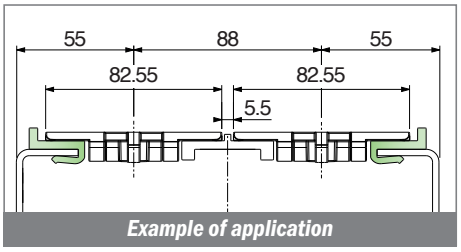

Example of application

175

Profilo "L" / *L-Profile / L-Profil*

On request available in white color

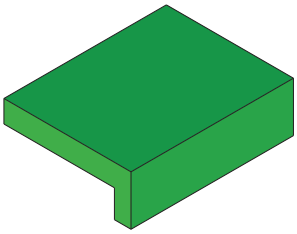

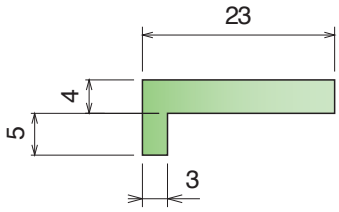

Part	Article-Nr.	Colour	Availability	Supply
175	17501	black	Stock item	60 m coils
175	17502	green	Stock item	60 m coils

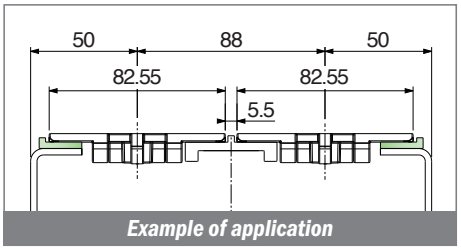

Example of application

Material:
Polyethylene UHMW-PE with molecular density 5,600,000 g/mol
Linear expansion coefficient: $1.1x10^{-4}$ °F^{-1} ($2x10^{-4}$ °C^{-1})
Operating temperature: -40 to 176°F (-40 to +80°C)

1038

Profilo "L" / *L-Profile / L-Profil*

North America STANDARD

Part	Article-Nr.	L	Colour	Availability	Supply
1038	103803	60 m	white	On request	60 m coils

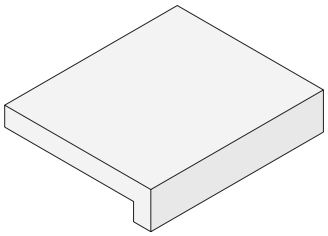

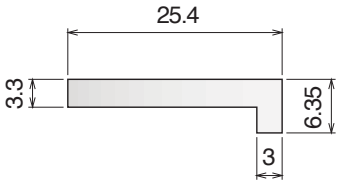

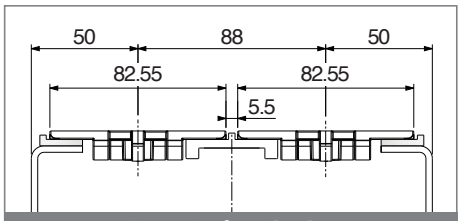

Example of application

150

Profilo "L" / *L-Profile / L-Profil*

On request available in white color

Part	Article-Nr.	Colour	Availability	Supply
150	15001	black	Stock item	60 m coils
150	15002	green	Stock item	60 m coils

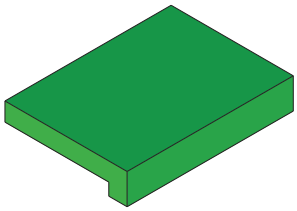

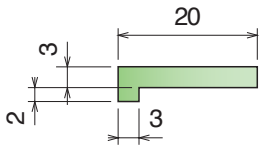

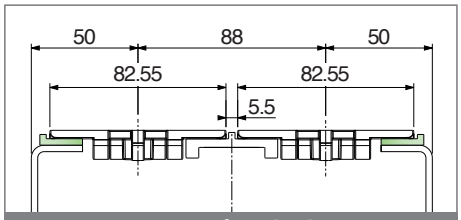

Example of application

1058

Profilo "L" / *L-Profile / L-Profil*

On request available in white color

Part	Article-Nr.	L	Colour	Availability	Supply
1058	105801C	3 m	black	Stock item	3 m bars
1058	105801	6 m	black	On request	6 m bars
1058	105802C	3 m	green	Stock item	3 m bars
1058	105802	6 m	green	On request	6 m bars

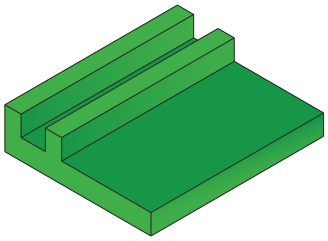

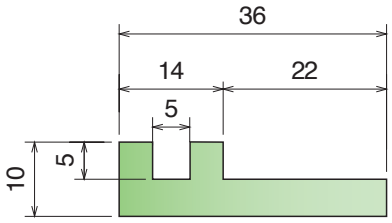

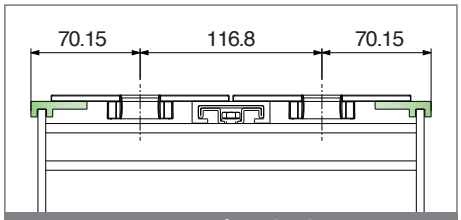

Example of application

174

Profilo "L" / *L-Profile / L-Profil*

On request available in white color

Part	Article-Nr.	L	Colour	Availability	Supply
174	17401C	3 m	black	Stock item	3 m bars
174	17401	6 m	black	On request	6 m bars
174	17402C	3 m	green	Stock item	3 m bars
174	17402	6 m	green	On request	6 m bars

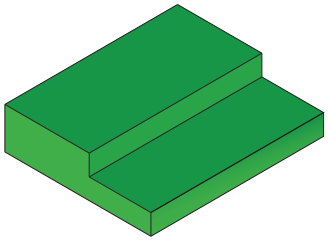

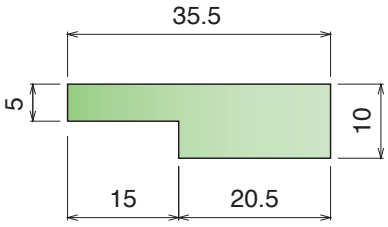

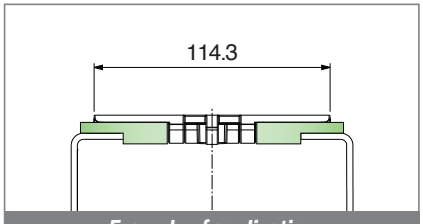

Example of application

Material:
Polyethylene UHMW-PE with molecular density 5,600,000 g/mol
Linear expansion coefficient: $1.1x10^{-4}$ °F^{-1} ($2x10^{-4}$ °C^{-1})
Operating temperature: -40 to 176°F (-40 to +80°C)

1014

Profilo J-Leg 19.05 / *J-Leg Profile 19.05 / J Profil mit Nase 19.05*

North America STANDARD

Fit on 3 mm

Part	Article-Nr.	L	Colour	Availability	Supply
1014	101403C	3 m	white	On request	3 m bars
1014	101403	6 m	white	On request	6 m bars

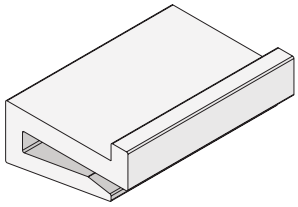

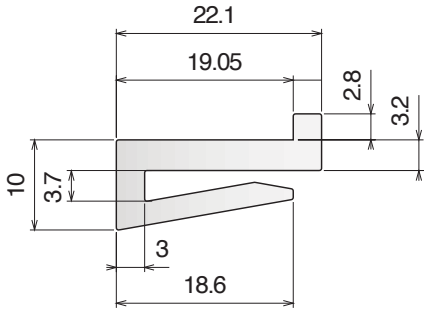

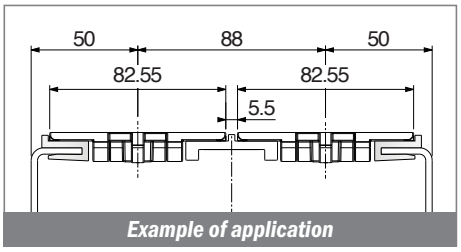

Example of application

1015

Profilo J-Leg 19.05 / *J-Leg Profile 19.05 / J Profil mit Nase 19.05*

North America STANDARD

Fit on 3 mm

Part	Article-Nr.	L	Colour	Availability	Supply
1015	101503C	3 m	white	On request	3 m bars
1015	101503	6 m	white	On request	6 m bars

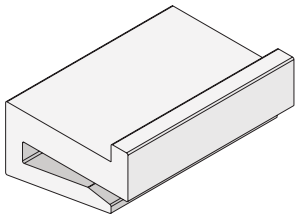

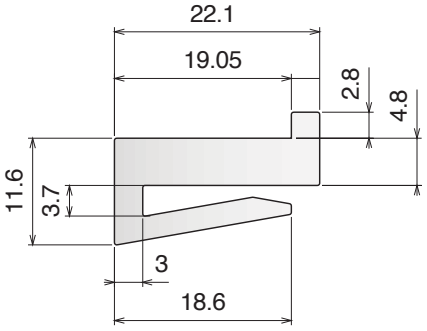

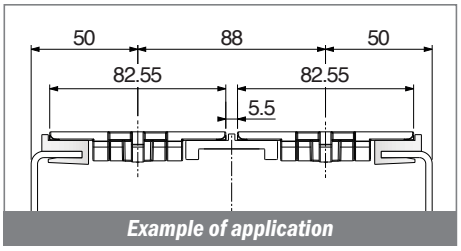

Example of application

1016

Profilo J-Leg 19.05 / *J-Leg Profile 19.05 / J Profil 19.05*

North America STANDARD

Fit on 3 mm

Part	Article-Nr.	L	Colour	Availability	Supply
1016	101603C	3 m	white	On request	3 m bars
1016	101603	6 m	white	On request	6 m bars
1016	101603-30	30 m	white	On request	30 m coils

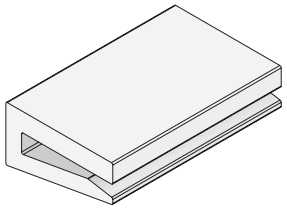

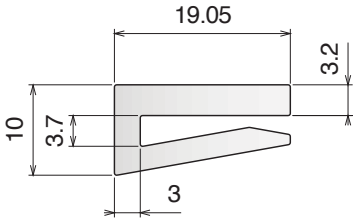

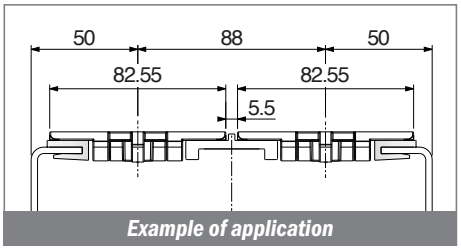

Example of application

1017

Profilo J-Leg 25.4 / *J-Leg Profile 25.4 / J Profil 25.4*

North America STANDARD

Fit on 3 mm

Part	Article-Nr.	L	Colour	Availability	Supply
1017	101703C	3 m	white	On request	3 m bars
1017	101703	6 m	white	On request	6 m bars
1017	101703-30	30 m	white	On request	30 m coils
1017	101703-75	75 m	white	On request	75 m coils

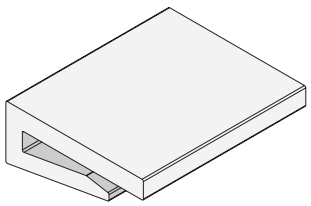

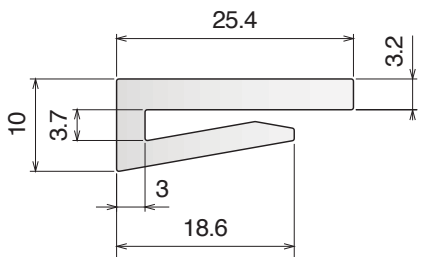

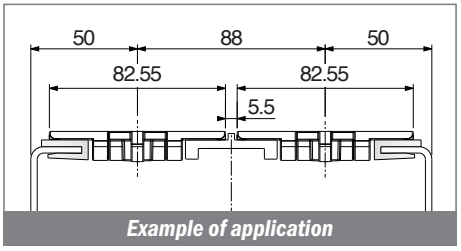

Example of application

Material:
Polyethylene UHMW-PE with molecular density 5,600,000 g/mol
Linear expansion coefficient: $1.1x10^{-4}$ °F^{-1} ($2x10^{-4}$ °C^{-1})
Operating temperature: -40 to 176°F (-40 to +80°C)

1018

Profilo J-Leg 25.4 / *J-Leg Profile 25.4 / J Profil 25.4*

Fit on 3 mm

North America STANDARD

Part	Article-Nr.	L	Colour	Availability	Supply
1018	101803C	3 m	white	On request	3 m bars
1018	101803	6 m	white	On request	6 m bars

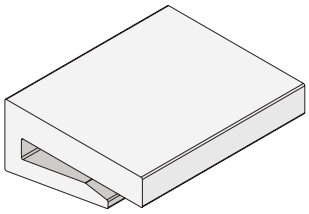

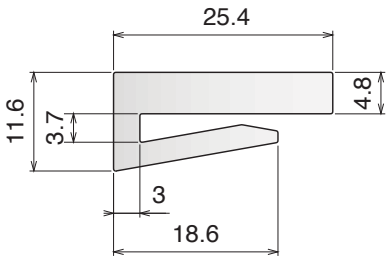

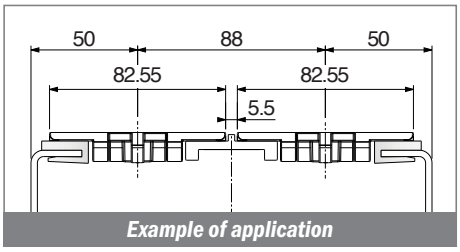

Example of application

1019

Profilo J-Leg 25.4 / *J-Leg Profile 25.4 / J Profil 25.4*

Fit on 3 mm

North America STANDARD

Part	Article-Nr.	L	Colour	Availability	Supply
1019	101903C	3 m	white	On request	3 m bars
1019	101903	6 m	white	On request	6 m bars

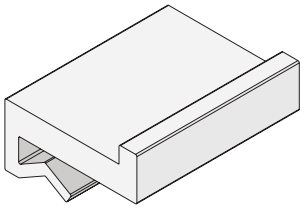

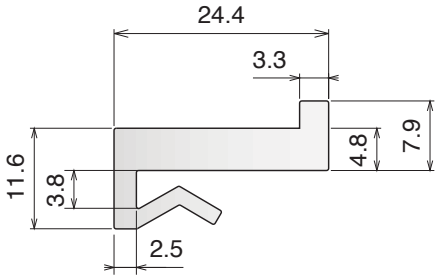

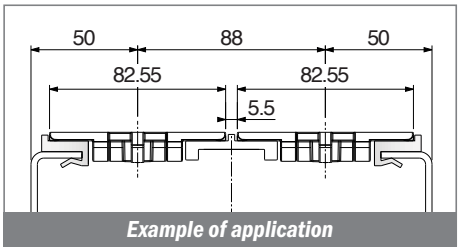

Example of application

1020

Profilo J-Leg 25.4 / *J-Leg Profile 25.4 / J Profil 25.4*

Fit on 3 mm

North America STANDARD

Part	Article-Nr.	L	Colour	Availability	Supply
1020	102003C	3 m	white	On request	3 m bars
1020	102003	6 m	white	On request	6 m bars

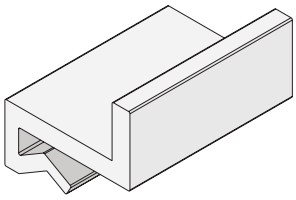

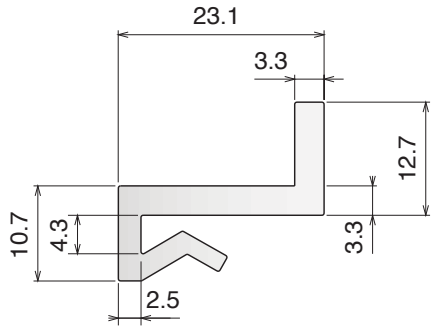

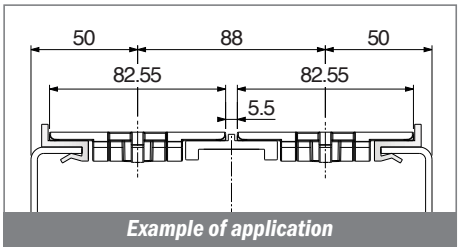

Example of application

Material:
Polyethylene UHMW-PE with molecular density 5,600,000 g/mol
Linear expansion coefficient: 1.1x10^{-4} °F^{-1} (2x10^{-4} °C^{-1})
Operating temperature: -40 to 176°F (-40 to +80°C)

1021

Profilo J-Leg 25.4 / *J-Leg Profile 25.4 / J Profil 25.4*

Fit on 3 mm

North America STANDARD

Part	Article-Nr.	L	Colour	Availability	Supply
1021	102103C	3 m	white	On request	3 m bars
1021	102103	6 m	white	On request	6 m bars
1021	102103-30	30 m	white	On request	30 m coils
1021	102103-75	75 m	white	On request	75 m coils

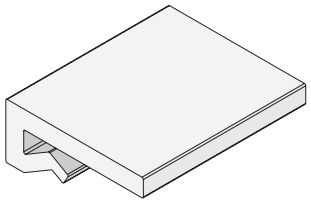

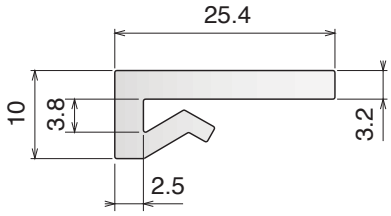

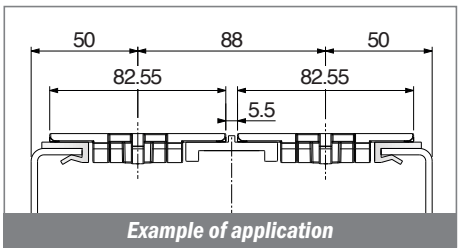

Example of application

1022

Profilo J-Leg 25.4 / *J-Leg Profile 25.4 / J Profil 25.4*

Fit on 3 mm

North America STANDARD

Part	Article-Nr.	L	Colour	Availability	Supply
1022	102203C	3 m	white	On request	3 m bars
1022	102203	6 m	white	On request	6 m bars
1022	102203-30	30 m	white	On request	30 m coils

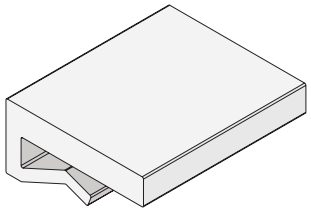

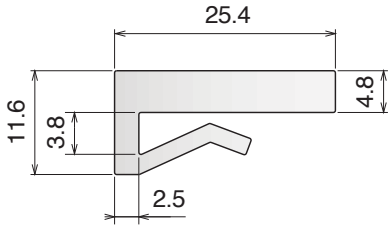

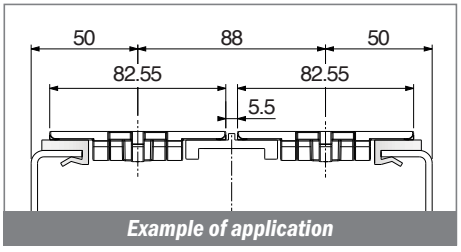

Example of application

1023

Profilo J-Leg 25.4 / *J-Leg Profile 25.4 / J Profil 25.4*

Fit on 3 mm

North America STANDARD

Part	Article-Nr.	L	Colour	Availability	Supply
1023	102303C	3 m	white	On request	3 m bars
1023	102303	6 m	white	On request	6 m bars

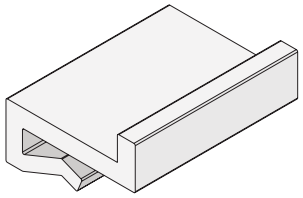

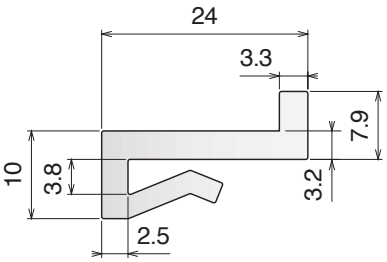

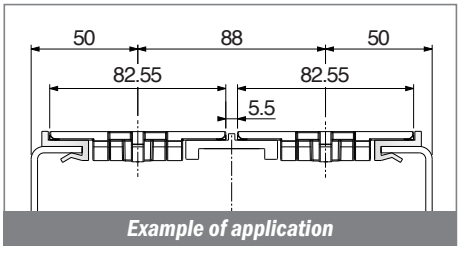

Example of application

1024

Profilo J-Leg 25.4 / *J-Leg Profile 25.4 / J Profil 25.4*

Fit on 3 mm

North America STANDARD

Part	Article-Nr.	L	Colour	Availability	Supply
1024	102403C	3 m	white	On request	3 m bars
1024	102403	6 m	white	On request	6 m bars
1024	102403-30	30 m	white	On request	30 m coils
1024	102402	6 m	green	On request	6 m bars

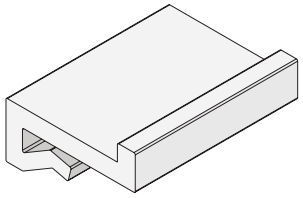

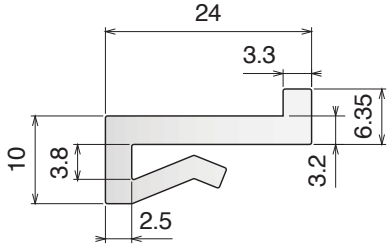

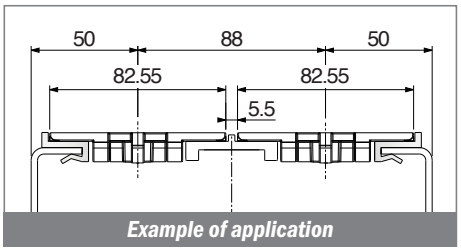

Example of application

Material:
Polyethylene UHMW-PE with molecular density 5,600,000 g/mol
Linear expansion coefficient: 1.1x10^{-4} °F^{-1} (2x10^{-4} °C^{-1})
Operating temperature: -40 to 176°F (-40 to +80°C)

1025

Profilo J-Leg 38.1 / *J-Leg Profile 38.1 / J Profil 38.1*

Fit on 3 mm

North America STANDARD

Part	Article-Nr.	L	Colour	Availability	Supply
1025	102503C	3 m	white	On request	3 m bars
1025	102503	6 m	white	On request	6 m bars
1025	102503-30	30 m	white	On request	30 m coils

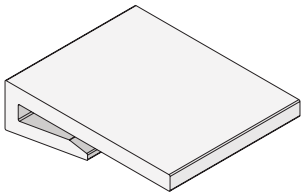

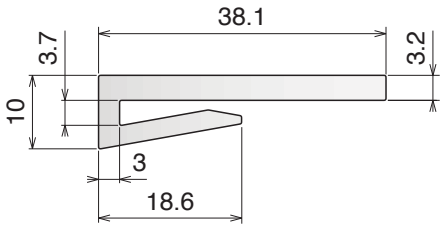

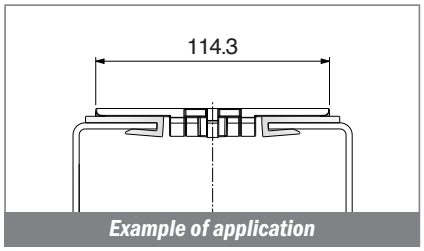

Example of application

1026

Profilo J-Leg 38.1 / *J-Leg Profile 38.1 / J Profil 38.1*

Fit on 3 mm

North America STANDARD

Part	Article-Nr.	L	Colour	Availability	Supply
1026	102603C	3 m	white	On request	3 m bars
1026	102603	6 m	white	On request	6 m bars

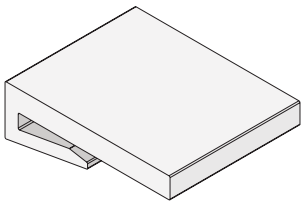

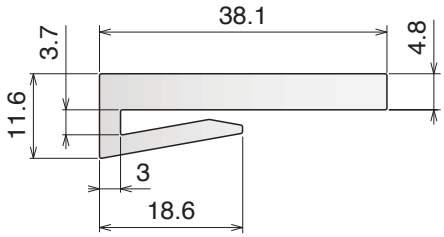

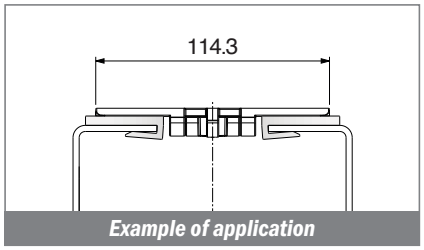

Example of application

1027

Profilo J-Leg 38.1 / *J-Leg Profile 38.1 / J Profil 38.1*

Fit on 3 mm

North America STANDARD

Part	Article-Nr.	L	Colour	Availability	Supply
1027	102703C	3 m	white	On request	3 m bars
1027	102703	6 m	white	On request	6 m bars

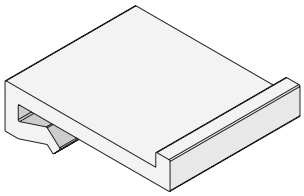

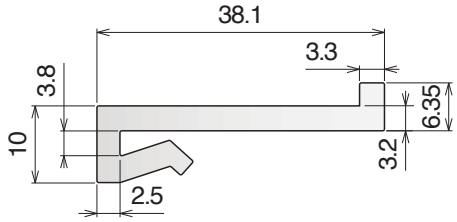

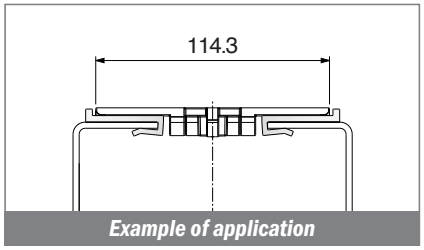

Example of application

1028

Profilo J-Leg 38.1 / *J-Leg Profile 38.1 / J Profil 38.1*

Fit on 3 mm

North America STANDARD

Part	Article-Nr.	L	Colour	Availability	Supply
1028	102803C	3 m	white	On request	3 m bars
1028	102803	6 m	white	On request	6 m bars

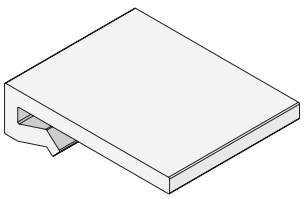

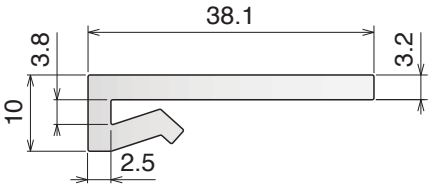

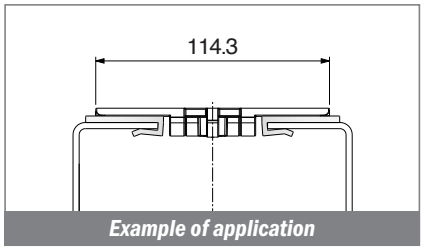

Example of application

1046-1029-1030-1031

Guide estruse / *Extruded profiles / Extrudiertes profil*

Material:
Polyethylene UHMW-PE with molecular density 5,600,000 g/mol
Linear expansion coefficient: 1.1x10^{-4} °F^{-1} (2x10^{-4} °C^{-1})
Operating temperature: -40 to 176°F (-40 to +80°C)

1046

Profilo J-Leg 40 / *J-Leg Profile 40 / J Profil 40*

North America STANDARD

Fit on 3 mm

Part	Article-Nr.	L	Colour	Availability	Supply
1046	104602C	3 m	green	On request	3 m bars
1046	104603C	3 m	white	On request	3 m bars
1046	104602-30	30 m	green	On request	30 m coils

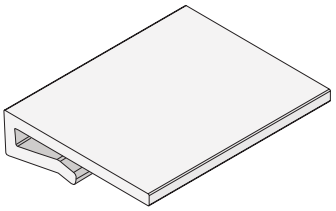

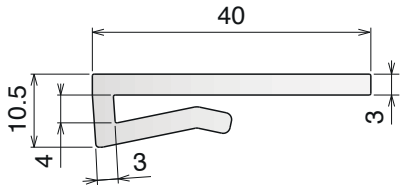

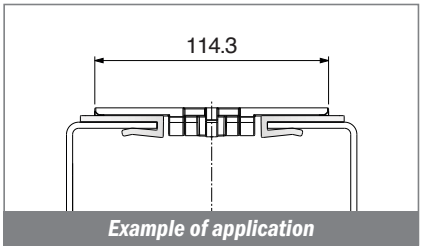

Example of application

1029

Profilo J-Leg 50.8 / *J-Leg Profile 50.8 / J Profil 50.8*

North America STANDARD

Fit on 3 mm

Part	Article-Nr.	L	Colour	Availability	Supply
1029	102903C	3 m	white	On request	3 m bars
1029	102903	6 m	white	On request	6 m bars

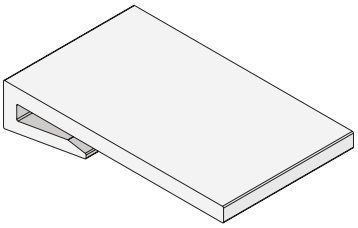

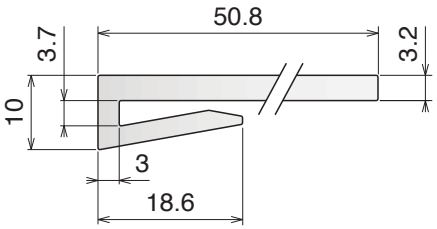

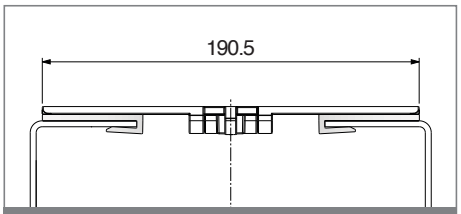

Example of application

1030

Profilo J-Leg 50.8 / *J-Leg Profile 50.8 / J Profil 50.8*

North America STANDARD

Fit on 3 mm

Part	Article-Nr.	L	Colour	Availability	Supply
1030	103003C	3 m	white	On request	3 m bars
1030	103003	6 m	white	On request	6 m bars

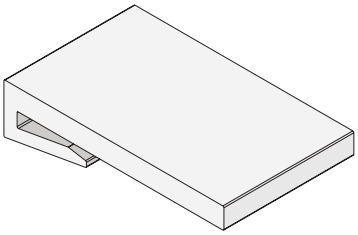

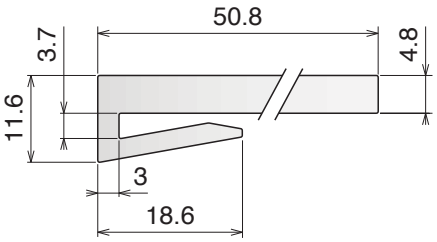

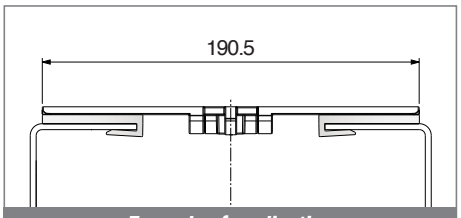

Example of application

1031

Profilo J-Leg 50.8 / *J-Leg Profile 50.8 / J Profil 50.8*

North America STANDARD

Fit on 3 mm

Part	Article-Nr.	L	Colour	Availability	Supply
1031	103103C	3 m	white	On request	3 m bars
1031	103103	6 m	white	On request	6 m bars

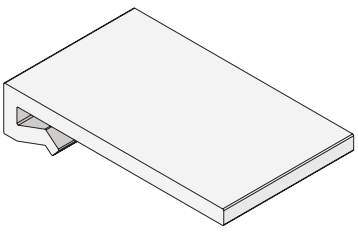

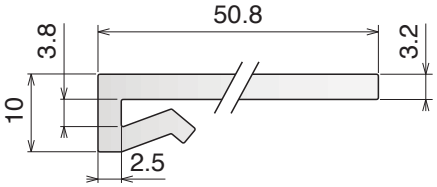

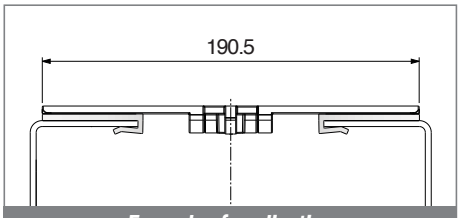

Example of application

Material:
Polyethylene UHMW-PE with molecular density 5,600,000 g/mol
Linear expansion coefficient: 1.1x10^{-4} °F^{-1} (2x10^{-4} °C^{-1})
Operating temperature: -40 to 176°F (-40 to +80°C)

1032

Profilo J-Leg 50.8 / *J-Leg Profile 50.8 / J Profil 50.8*

Fit on 3 mm

North America STANDARD

Part	Article-Nr.	L	Colour	Availability	Supply
1032	103203C	3 m	white	On request	3 m bars
1032	103203	6 m	white	On request	6 m bars

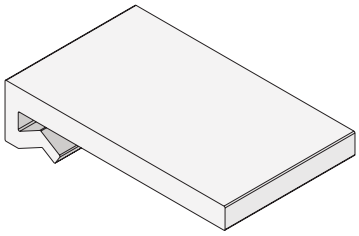

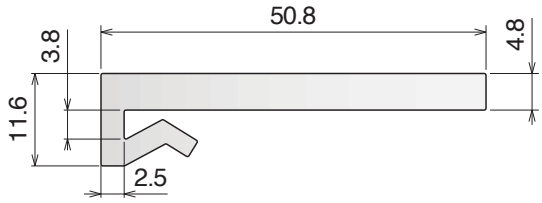

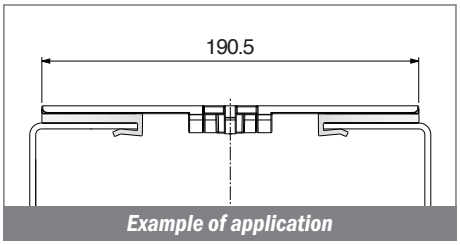

1033

Profilo J-Leg 76.2 / *J-Leg Profile 76.2 / J Profil 76.2*

Fit on 3 mm

North America STANDARD

Part	Article-Nr.	L	Colour	Availability	Supply
1033	103303C	3 m	white	On request	3 m bars
1033	103303	6 m	white	On request	6 m bars

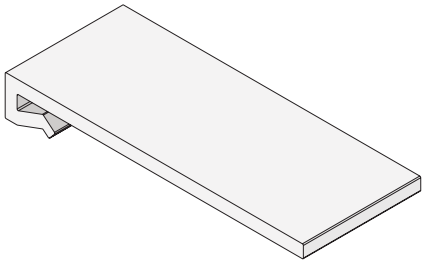

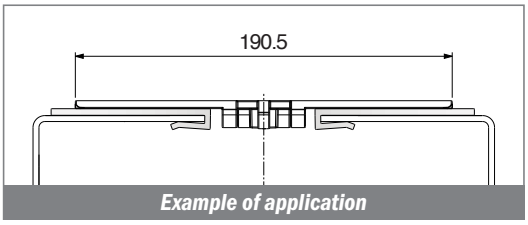

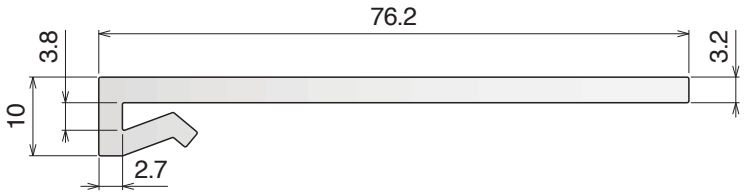

1034

Profilo J-Leg 76.2 / *J-Leg Profile 76.2 / J Profil 76.2*

Fit on 3 mm

North America STANDARD

Part	Article-Nr.	L	Colour	Availability	Supply
1034	103403C	3 m	white	On request	3 m bars
1034	103403	6 m	white	On request	6 m bars

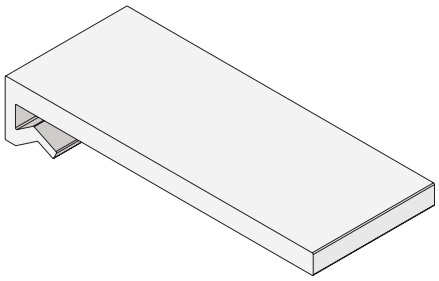

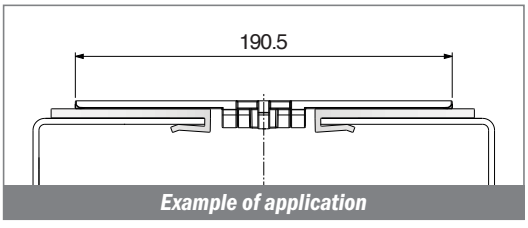

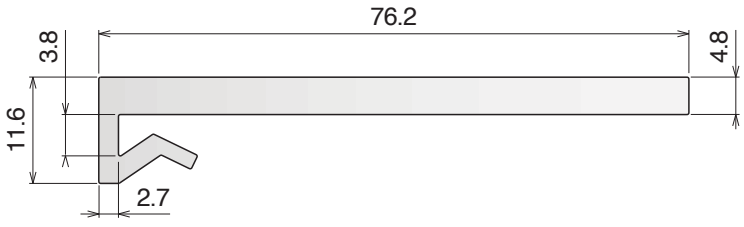

Material:
Polyethylene UHMW-PE with molecular density 5,600,000 g/mol
Linear expansion coefficient: 1.1x10^{-4} °F^{-1} (2x10^{-4} °C^{-1})
Operating temperature: -40 to 176°F (-40 to +80°C)

1035

Profilo J-Leg 73 / *J-Leg Profile 73 / J Profil 73*

Fit on 3 mm

North America STANDARD

Part	Article-Nr.	L	Colour	Availability	Supply
1035	103503C	3 m	white	On request	3 m bars
1035	103503	6 m	white	On request	6 m bars

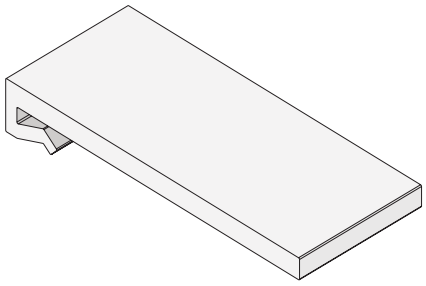

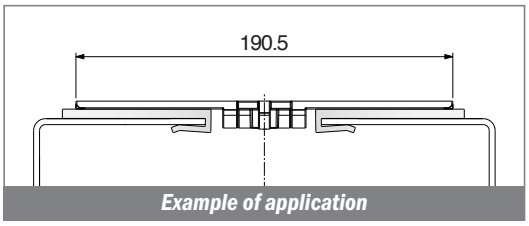

Example of application

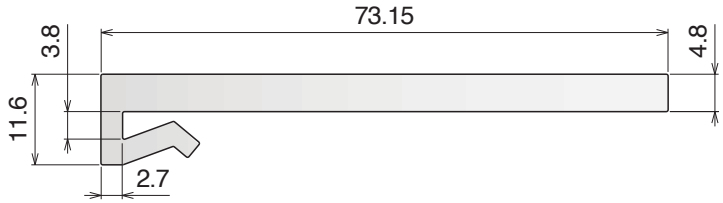

105

Profilo "Z" / *Z-Profile / Z-Profil*

On request available in white color

Part	Article-Nr.	A	B	Colour	Availability	Supply
105	10501	20	3	black	Stock item	60 m coils
105	10502	20	3	green	Stock item	60 m coils
105	10503	20	5	black	Stock item	60 m coils
105	10504	20	5	green	Stock item	60 m coils
105	10595	25	3	green	Stock item	60 m coils
105	10592	30	3	green	On request	60 m coils
105	10594	30	5	green	On request	60 m coils
105	10596	40	3	green	Stock item	60 m coils
105	10597	50	3	green	On request	60 m coils
105	10505	60	3	black	Stock item	60 m coils
105	10506	60	3	green	Stock item	60 m coils
105	10507	70	3	black	Stock item	60 m coils
105	10508	70	3	green	Stock item	60 m coils
105	10509	100	3	black	On request	60 m coils
105	10510	100	3	green	Stock item	60 m coils

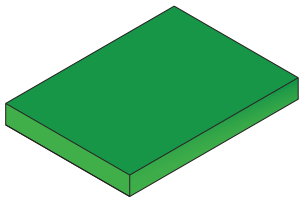

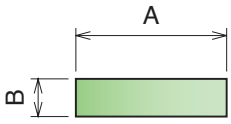

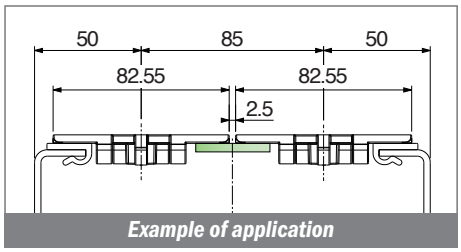

Example of application

106

Profilo guida catena / *Flat profile with nose / Flachprofil mit Nase*

On request available in white color

Part	Article-Nr.	Colour	Availability	Supply
106	10601	black	Stock item	60 m coils
106	10602	green	Stock item	60 m coils

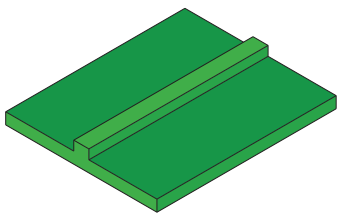

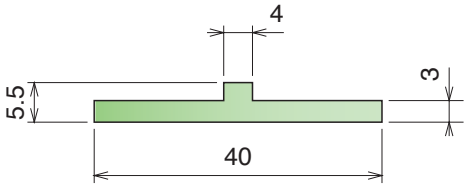

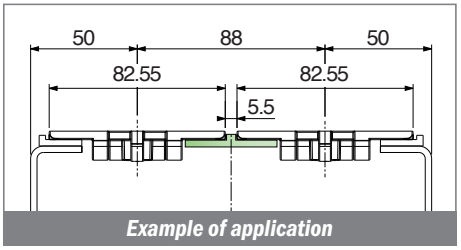

Example of application

Material:
Polyethylene UHMW-PE with molecular density 5,600,000 g/mol
Linear expansion coefficient: $1.1x10^{-4}$ °F^{-1} ($2x10^{-4}$ °C^{-1})
Operating temperature: -40 to 176°F (-40 to +80°C)

107

Profilo guida catena / *Wear strip / Rückführleiste*

On request available in white color

Part	Article-Nr.	Colour	Availability	Supply
107	10701	black	Stock item	60 m coils
107	10702	green	Stock item	60 m coils

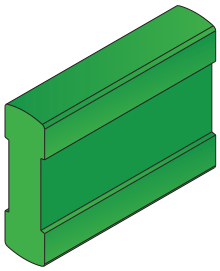

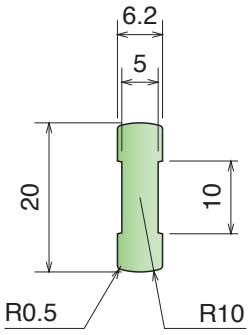

Supports Available:
PART 230-231
Pag 358



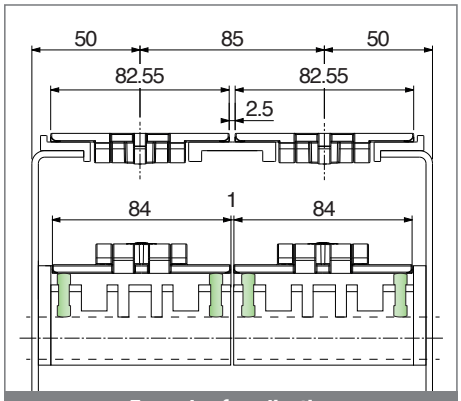

Example of application

108

Profilo T / *T-profile / T-Profil*

On request available in white color | **Fit on 4 mm**

Part	Article-Nr.	L	Colour	Availability	Supply
108	10801C	3 m	black	Stock item	3 m bars
108	10801	6 m	black	On request	6 m bars
108	10802C	3 m	green	Stock item	3 m bars
108	10802	6 m	green	On request	6 m bars

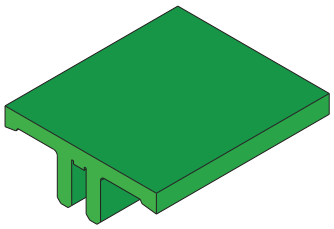

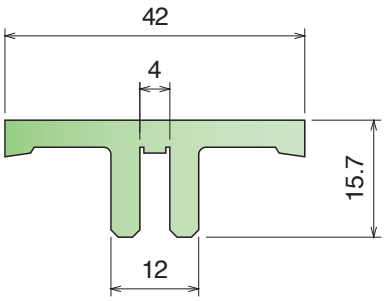

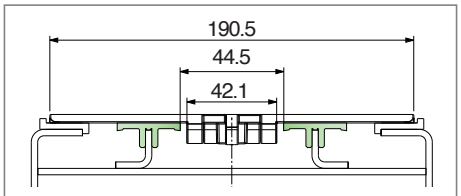

Ideal as intermediate plate support for wide chains.

Example of application

109

Profilo clip-on guida catena / *Flat clip-on wear strip / U-Profil Clip-on*

Part	Article-Nr.	L	Colour	Availability	Supply
109	10901C	3 m	black	Stock item	3 m bars
109	10901	6 m	black	On request	6 m bars
109	10902C	3 m	green	Stock item	3 m bars
109	10902	6 m	green	On request	6 m bars
109	10903C	3 m	white	Stock item	3 m bars
109	10903	6 m	white	Stock item	6 m bars
109	10901BC	3 m	BluLub	Stock item	3 m bars
109	10901B	6 m	BluLub	On request	6 m bars
109	10901B-30	30 m	BluLub	On request	30 m colis

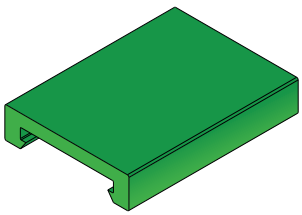

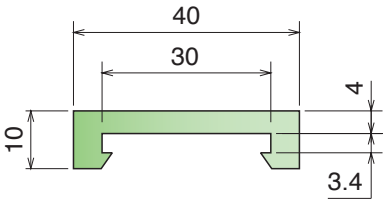

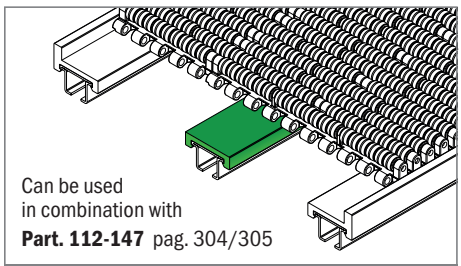

Can be used
in combination with
Part. 112-147 pag. 304/305

Example of application

Material:
Polyethylene UHMW-PE with molecular density 5,600,000 g/mol
Linear expansion coefficient: 1.1x10^{-4} °F^{-1} (2x10^{-4} °C^{-1})
Operating temperature: -40 to 176°F (-40 to +80°C)

110

Profilo clip-on guida catena con bordo / *Flat clip-on wear strip with nose / U-Profil Clip-on mit Nase*

On request available in white color

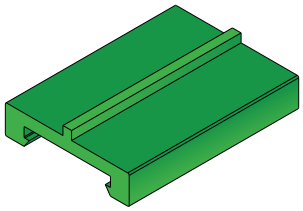

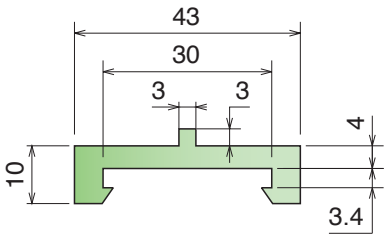

Part	Article-Nr.	L	Colour	Availability	Supply
110	11001C	3 m	black	Stock item	3 m bars
110	11001	6 m	black	On request	6 m bars
110	11002C	3 m	green	Stock item	3 m bars
110	11002	6 m	green	On request	6 m bars

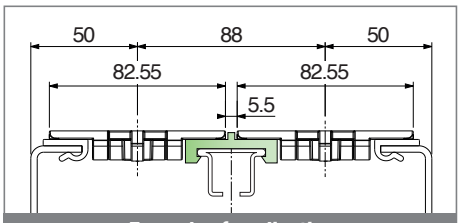

Example of application

156

Profilo clip-on guida tappeto / *Clip-on wear strip for belt / Clip-on m. Seitenführung*

On request available in white color

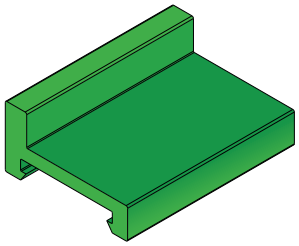

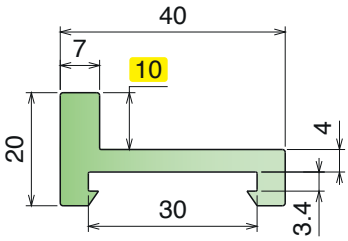

Part	Article-Nr.	L	Colour	Availability	Supply
156	15601C	3 m	black	Stock item	3 m bars
156	15601	6 m	black	On request	6 m bars
156	15602C	3 m	green	Stock item	3 m bars
156	15602	6 m	green	On request	6 m bars

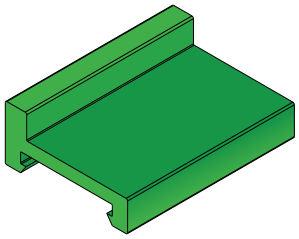

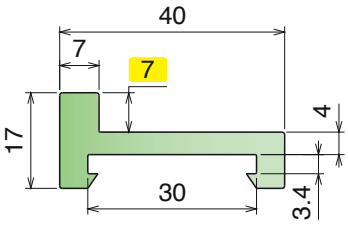

Part	Article-Nr.	L	Colour	Availability	Supply
156	15699C	3 m	green	On request	3 m bars

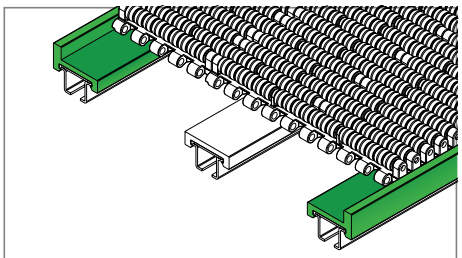

Example of application

112

Profilo / *Profile / Profil*

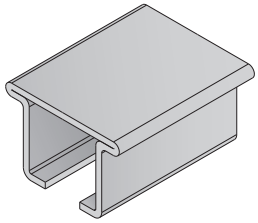

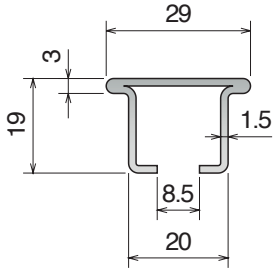

Part	Article-Nr.	L	Material	Availability	Supply
112	11201C	3 m	AISI 304	Stock item	3 m bars
112	11201	6 m	AISI 304	On request	6 m bars
112	11202C	3 m	AISI 430	Stock item	3 m bars
112	11202	6 m	AISI 430	On request	6 m bars

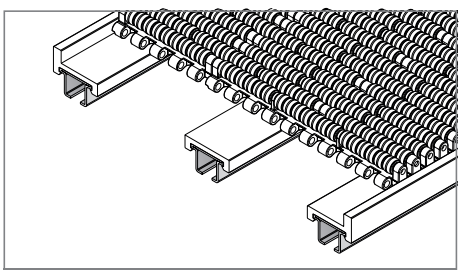

Example of application

Material:
Polyethylene UHMW-PE with molecular density 5,600,000 g/mol
Linear expansion coefficient: 1.1x10^{-4} °F^{-1} (2x10^{-4} °C^{-1})
Operating temperature: -40 to 176°F (-40 to +80°C)

147

Profilo in alluminio / *Aluminum profile / Aluminium-Profil*

Part	Article-Nr.	L	Material	Availability	Supply
147	14701C	3 m	Aluminium	Stock item	3 m bars
147	14701	6 m	Aluminium	On request	6 m bars

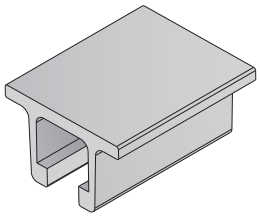

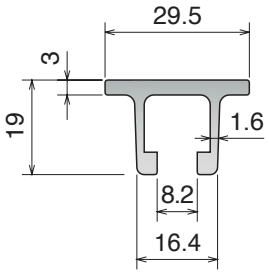

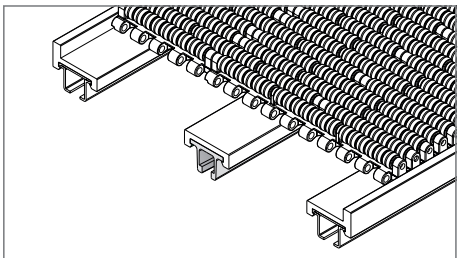

Example of application

133

Profilo assemblato clip-on / *Profile assembled clip-on / Profile montiert clip-on*

On request available in white color

Part	Article-Nr.	L	Material	Colour	Availability	Supply
133	13301C	3 m	AISI 304	green	Stock item	3 m bars
133	13301	6 m	AISI 304	green	On request	6 m bars
133	13302C	3 m	AISI 430	green	Stock item	3 m bars
133	13302	6 m	AISI 430	green	On request	6 m bars
133	13303C	3 m	AISI 304	black	Stock item	3 m bars
133	13303	6 m	AISI 304	black	On request	6 m bars
133	13304C	3 m	AISI 430	black	Stock item	3 m bars
133	13304	6 m	AISI 430	black	On request	6 m bars
133	13305BC	3 m	AISI 304	BluLub	Stock item	3 m bars
133	13305B	6 m	AISI 304	BluLub	On request	6 m bars
133	13306BC	3 m	AISI 430	BluLub	Stock item	3 m bars
133	13306B	6 m	AISI 430	BluLub	On request	6 m bars

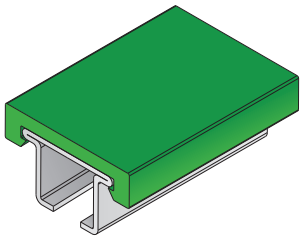

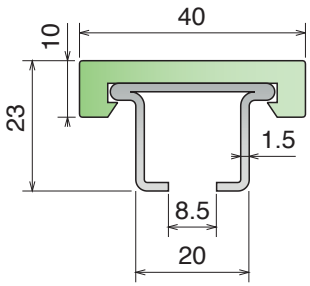

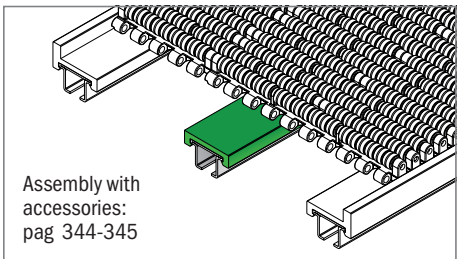

Assembly with accessories: pag 344-345

Example of application

148

Profilo assemblato clip-on / *Profile assembled clip-on / Profile montiert clip-on*

Part	Article-Nr.	L	Material	Colour	Availability	Supply
148	14801C	3 m	Aluminium	green	Stock item	3 m bars
148	14801	6 m	Aluminium	green	On request	6 m bars
148	14801BC	3 m	Aluminium	BluLub	Stock item	3 m bars
148	14801B	6 m	Aluminium	BluLub	On request	6 m bars
148	14802C	3 m	Aluminium	black	Stock item	3 m bars
148	14802	6 m	Aluminium	black	On request	6 m bars
148	14803C	3 m	Aluminium	white	Stock item	3 m bars

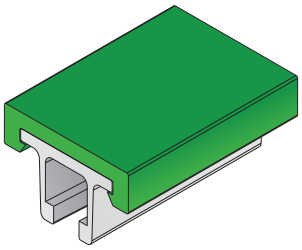

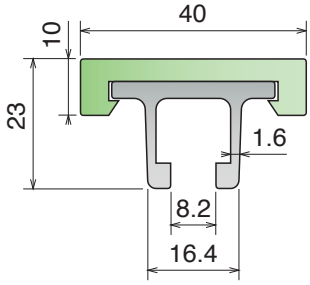

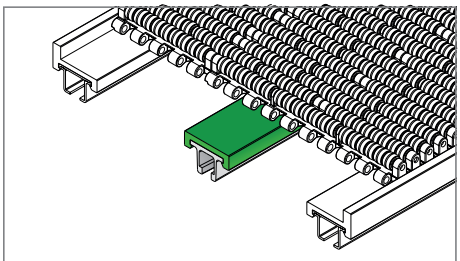

Example of application

Material:
Polyethylene UHMW-PE with molecular density 5,600,000 g/mol
Linear expansion coefficient: $1.1x10^{-4}$ °F^{-1} ($2x10^{-4}$ °C^{-1})
Operating temperature: -40 to 176°F (-40 to +80°C)

157

Profilo guida tappeto assemblato / *Wear strip assembled for belt / Gleitleiste für mattenketten kpl montiert*

On request available in white color

Part	Article-Nr.	L	Material	Colour	Availability	Supply
157	15701C	3 m	AISI 304	green	Stock item	3 m bars
157	15701	6 m	AISI 304	green	On request	6 m bars
157	15702C	3 m	AISI 430	green	Stock item	3 m bars
157	15702	6 m	AISI 430	green	On request	6 m bars

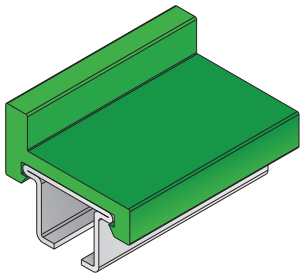

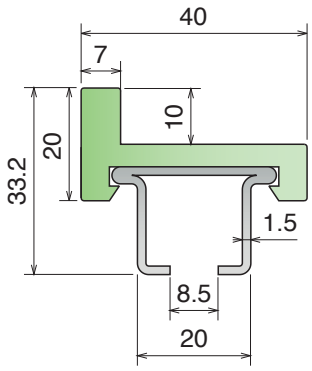

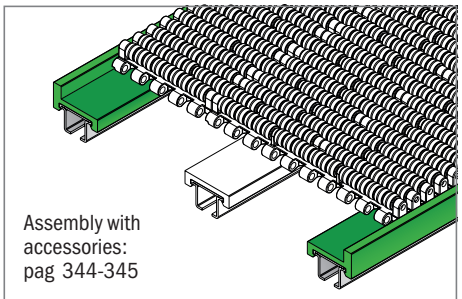

Example of application

Part	Article-Nr.	L	Material	Colour	Availability	Supply
157	15799C	3 m	AISI 304	green	On request	3 m bars

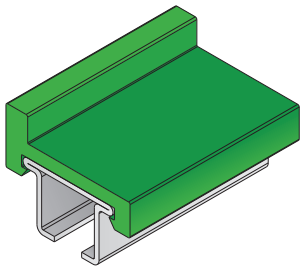

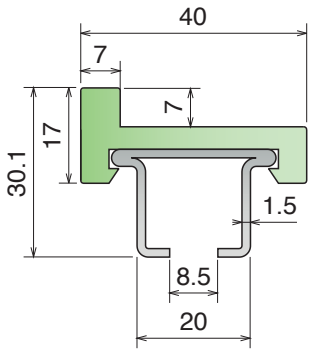

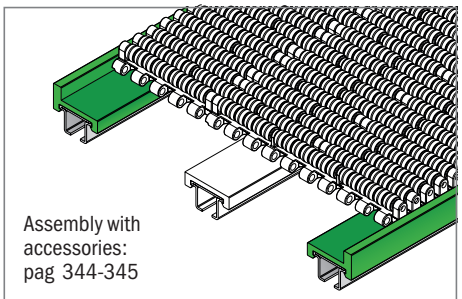

Example of application

118

Profilo Delta / *D-Profile / D-Profil*

Part	Article-Nr.	L	Material	Availability	Supply
118	11801C	3 m	AISI 304	Stock item	3 m bars
118	11801	6 m	AISI 304	On request	6 m bars
118	11802C	3 m	AISI 430	Stock item	3 m bars
118	11802	6 m	AISI 430	On request	6 m bars

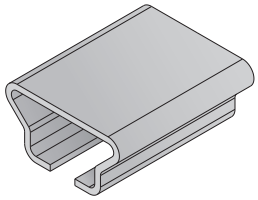

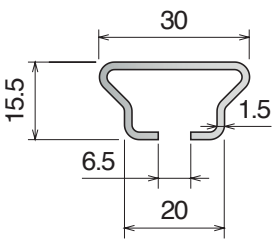

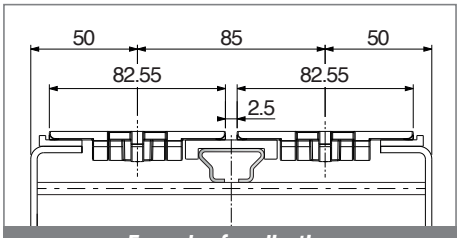

Example of application

Material:
Polyethylene UHMW-PE with molecular density 5,600,000 g/mol
Linear expansion coefficient: 1.1x10^{-4} °F^{-1} (2x10^{-4} °C^{-1})
Operating temperature: -40 to 176°F (-40 to +80°C)

149 Profilo ad "U" con bordo */U-profile with nose / U-Profil mit Nase*

On request available in white color | Coils available

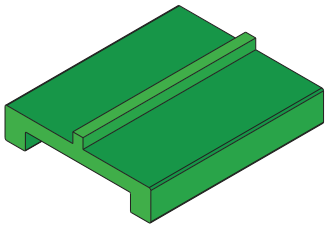

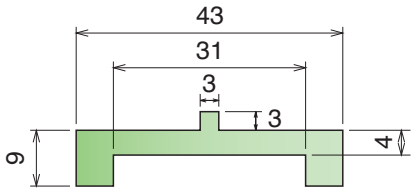

Part	Article-Nr.	L	Colour	Availability	Supply
149	14950C	3 m	black	Stock item	3 m bars
149	14950	6 m	black	On request	6 m bars
149	14952C	3 m	green	Stock item	3 m bars
149	14952	6 m	green	On request	6 m bars

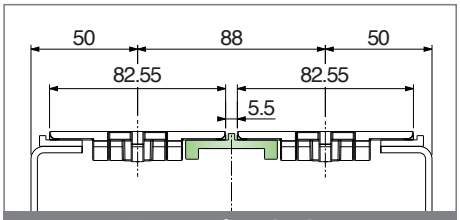

Example of application

177 Profilo ad "U" */ U-profile / U-Profil*

On request available in white color

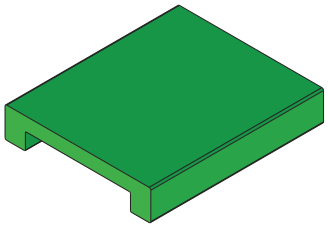

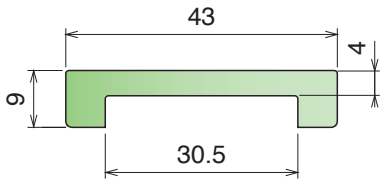

Part	Article-Nr.	L	Colour	Availability	Supply
177	17701C	3 m	black	Stock item	3 m bars
177	17701	6 m	black	On request	6 m bars
177	17702C	3 m	green	Stock item	3 m bars
177	17702	6 m	green	On request	6 m bars
177	17701BC	3 m	BluLub	Stock item	3 m bars
177	17701B	6 m	BluLub	On request	6 m bars
177	17702-30	30 m	green	On request	30 m coils

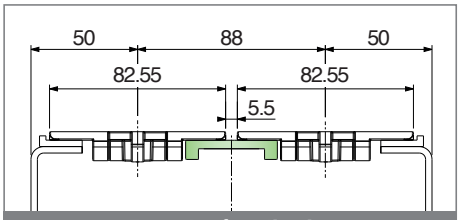

Example of application

1059 Profilo ad "U" */ U-profile / U-Profil*

On request available in white color | Coils available

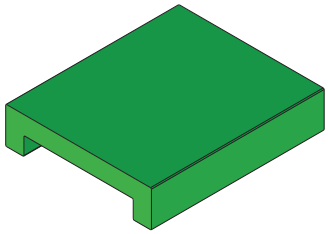

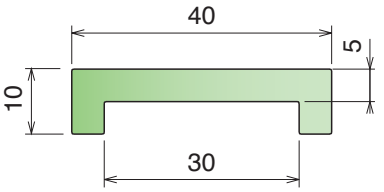

Part	Article-Nr.	L	Colour	Availability	Supply
1059	105901C	3 m	black	Stock item	3 m bars
1059	105901	6 m	black	On request	6 m bars
1059	105902C	3 m	green	Stock item	3 m bars
1059	105902	6 m	green	On request	6 m bars
1059	105901BC	3 m	BluLub	Stock item	3 m bars
1059	105901B	6 m	BluLub	On request	6 m bars

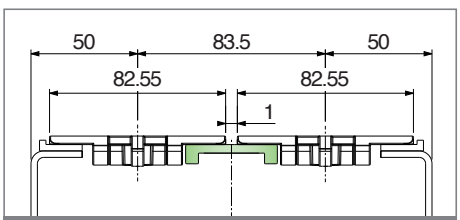

Example of application

Material:
Polyethylene UHMW-PE with molecular density 5,600,000 g/mol
Linear expansion coefficient: 1.1x10^{-4} °F^{-1} (2x10^{-4} °C^{-1})
Operating temperature: -40 to 176°F (-40 to +80°C)

178

Profilo ad "U" / *U-profile / U-Profil*

On request available in white color | Coils available

Part	Article-Nr.	L	Colour	Availability	Supply
178	17801C	3 m	black	Stock item	3 m bars
178	17801	6 m	black	On request	6 m bars
178	17802C	3 m	green	Stock item	3 m bars
178	17802	6 m	green	On request	6 m bars
178	17801BC	3 m	BluLub	Stock item	3 m bars
178	17801B	6 m	BluLub	On request	6 m bars

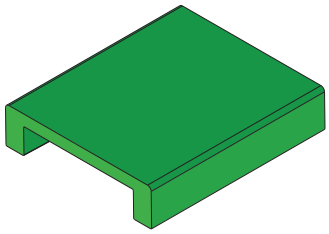

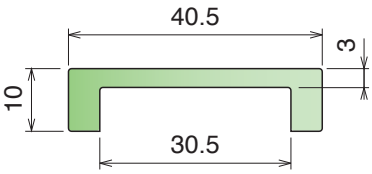

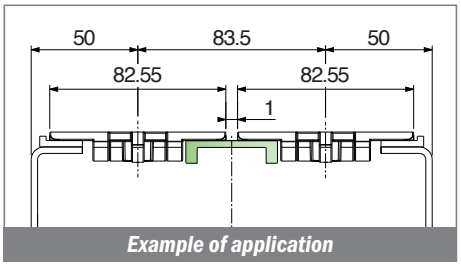

Example of application

111

Profilo ad "U" / *U-profile / U-Profil*

On request available in white color

Part	Article-Nr.	L	Colour	Availability	Supply
111	11101C	3 m	black	Stock item	3 m bars
111	11101	6 m	black	On request	6 m bars
111	11102C	3 m	green	Stock item	3 m bars
111	11102	6 m	green	On request	6 m bars
111	11101-60	60 m	black	On request	60 m coils
111	11102-60	60 m	green	On request	60 m coils
111	11101BC	3 m	BluLub	Stock item	3 m bars
111	11101B	6 m	BluLub	On request	6 m bars

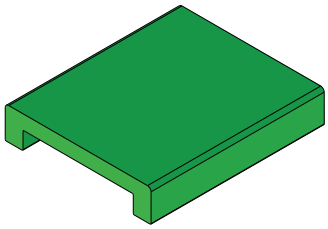

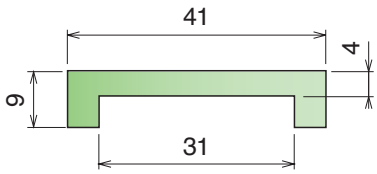

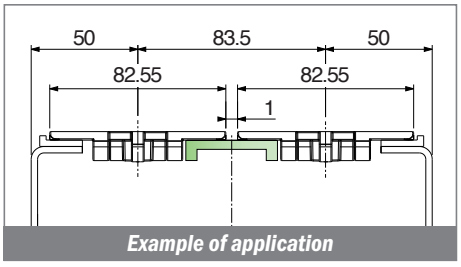

Example of application

1060

Profilo ad "U" / *U-profile / U-Profil*

On request available in white color | Coils available

Part	Article-Nr.	L	Colour	Availability	Supply
1060	106001C	3 m	black	Stock item	3 m bars
1060	106001	6 m	black	On request	6 m bars
1060	106002C	3 m	green	Stock item	3 m bars
1060	106002	6 m	green	On request	6 m bars

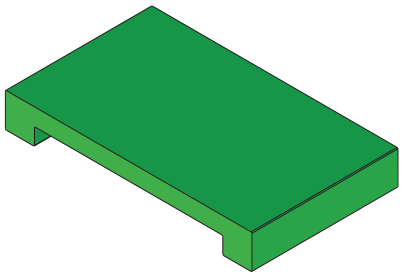

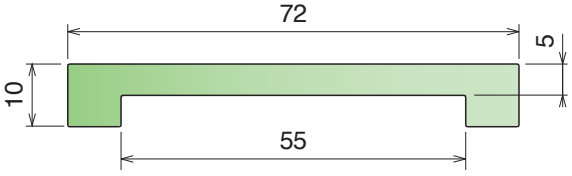

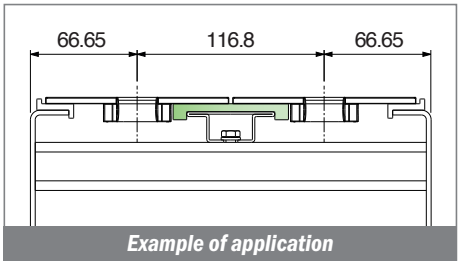

Example of application

199-U-Profile

Material:
Polyethylene UHMW-PE with molecular density 5,600,000 g/mol
Linear expansion coefficient: 1.1x10^{-4} °F^{-1} (2x10^{-4} °C^{-1})
Operating temperature: -40 to 176°F (-40 to +80°C)

199

Profilo ad "U" / *U-profile / U-Profil*

On request available in white color | Coils available

Part	Article-Nr.	L	Colour	Availability	Supply
199	19976	6 m	white	On request	6 m bars

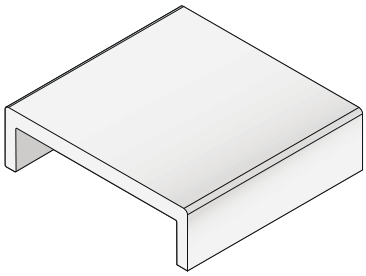

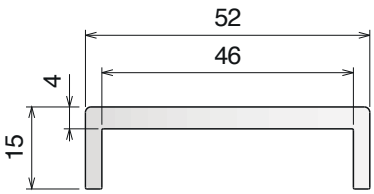

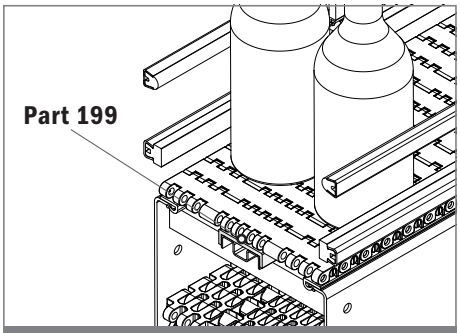

Example of application

U-Profile

Profilo ad "U" *42 mm/ U-profile 42 mm/ U-Profil 42 mm*

On request available in white color

Part	Article-Nr.	L	Colour	Availability	Supply
199	19944B-30	30 m	BluLub	On request	30 m bars

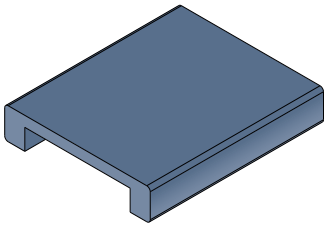

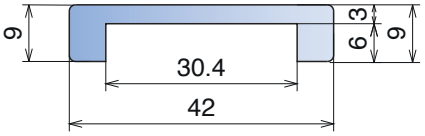

Staggered version

Part	Article-Nr.	L	Colour	Availability	Supply
199	19945-30	30 m	black	Stock item	30 m bars
199	19945B-30	30 m	BluLub	Stock item	30 m bars
199	19946-30	30 m	green	Stock item	30 m bars

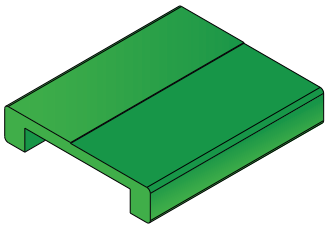

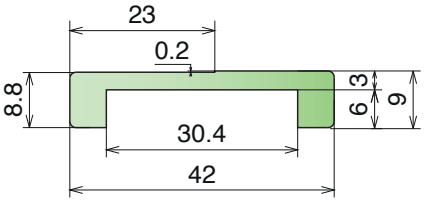

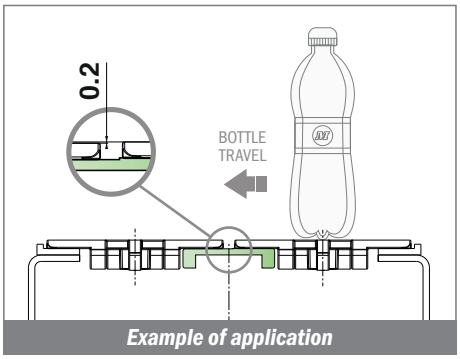

Example of application

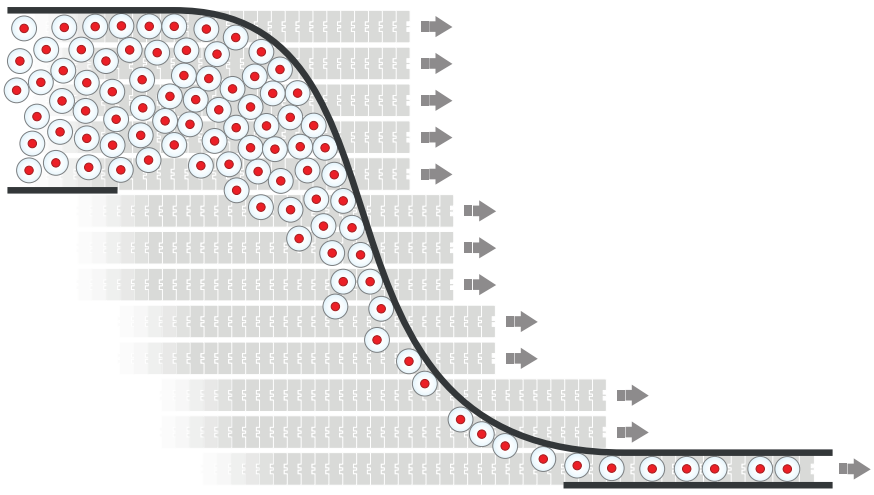

Material:
Polyethylene UHMW-PE with molecular density 5,600,000 g/mol
Linear expansion coefficient: $1.1x10^{-4}$ °F^{-1} ($2x10^{-4}$ °C^{-1})
Operating temperature: -40 to 176°F (-40 to +80°C)

180

Copri profilo / *Bar cover / Abdeckprofil*

Part	Article-Nr.	L	Colour	Availability	Supply
180	18003C	3 m	white	Stock item	3 m bars
180	18003	6 m	white	On request	6 m bars

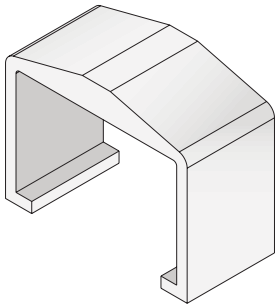

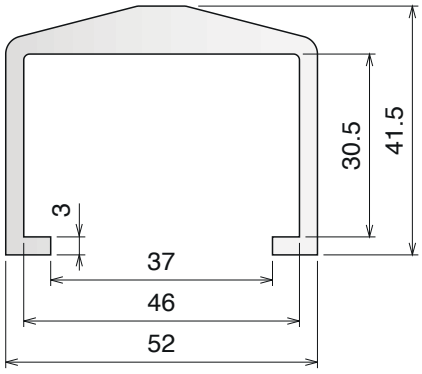

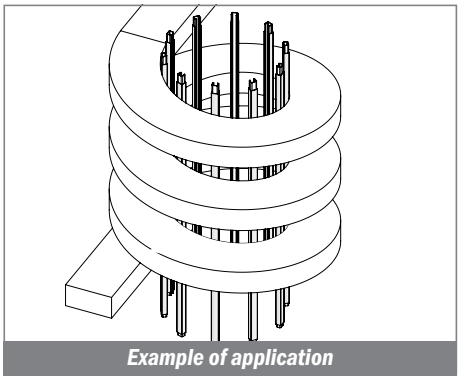
Example of application

181

Copri profilo 25.4 x 25.4 / *Bar cover 25.4 x 25.4 / Abdeckprofil 25.4 x 25.4*

Fit on 25.4 x 25.4 mm

Part	Article-Nr.	L	Colour	Availability	Supply
181	18103C	3 m	white	Stock item	3 m bars
181	18103	6 m	white	On request	6 m bars

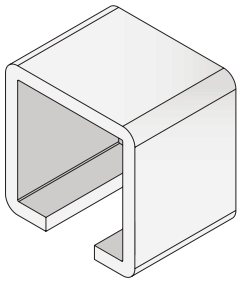

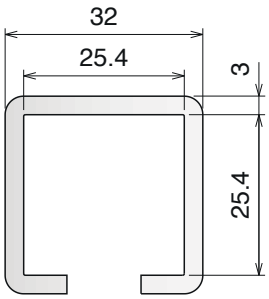

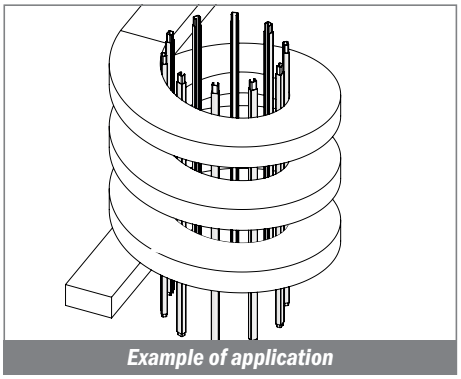
Example of application

1052

Copri profilo 38.1 x 50.8 / *Bar cover 38.1 x 50.8 / Abdeckprofil 38.1 x 50.8*

Fit on 38.1 x 50.8 mm

Part	Article-Nr.	L	Colour	Availability	Supply
1052	105203C	3 m	white	Stock item	3 m bars
1052	105203	6 m	white	On request	6 m bars

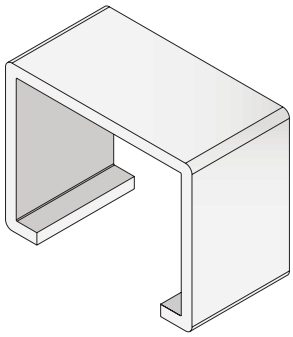

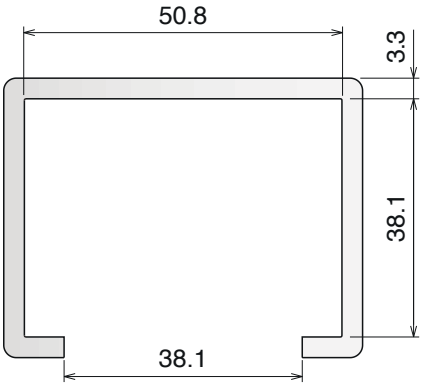

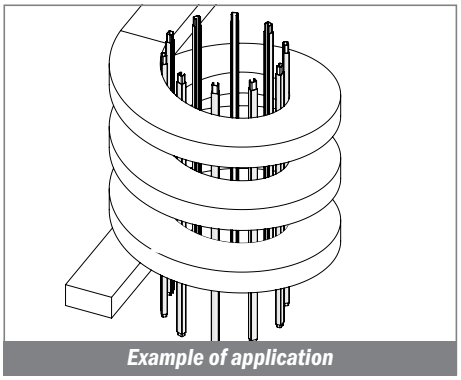
Example of application

Material:
Polyethylene UHMW-PE with molecular density 5,600,000 g/mol
Linear expansion coefficient: 1.1x10^{-4} °F^{-1} (2x10^{-4} °C^{-1})
Operating temperature: -40 to 176°F (-40 to +80°C)

1000

Copri profilo 1.5 mm / *Bar cap 1.5 mm / Abdeckprofil 1.5 mm*

Fit on 1.5 mm

Part	Article-Nr.	L	Colour	Availability	Supply
1000	100003-30	30 m	white	On request	30 m coils

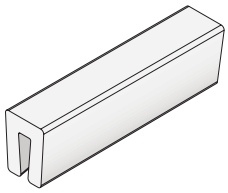

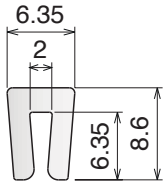

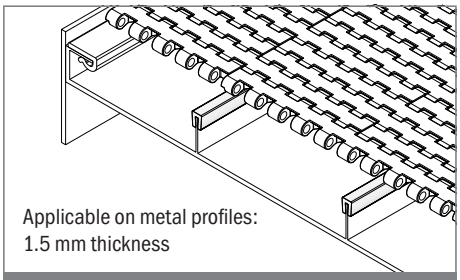

Example of application

1001

Copri profilo 1.5 mm / *Bar cap 1.5 mm / Abdeckprofil 1.5 mm*

Fit on 1.5 mm

Part	Article-Nr.	L	Colour	Availability	Supply
1001	100103-30	30 m	white	On request	30 m coils

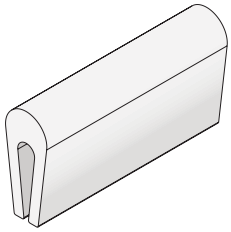

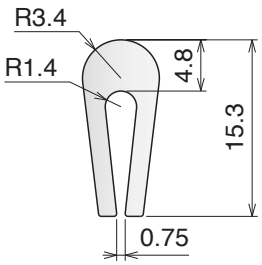

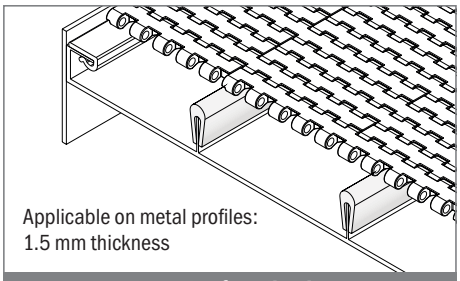

Example of application

1002

Copri profilo 3 mm / *Bar cap 3 mm / Abdeckprofil 3 mm*

Fit on 3 mm

Part	Article-Nr.	L	Colour	Availability	Supply
1002	100203-30	30 m	white	On request	30 m coils

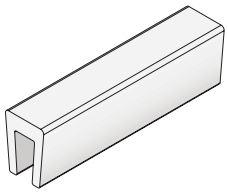

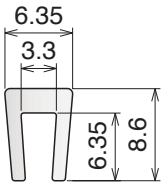

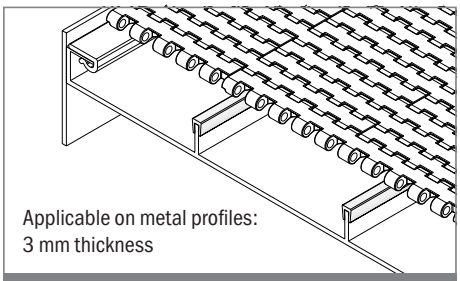

Example of application

1003

Copri profilo 3 mm / *Bar cap 3 mm / Abdeckprofil 3 mm*

Fit on 3 mm

Part	Article-Nr.	L	Colour	Availability	Supply
1003	100303-30	30 m	white	On request	30 m coils

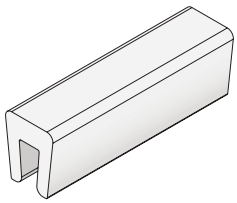

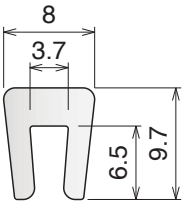

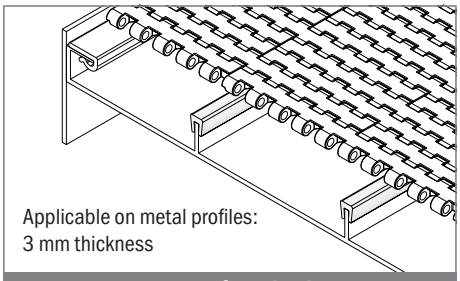

Example of application

Material:
Polyethylene UHMW-PE with molecular density 5,600,000 g/mol
Linear expansion coefficient: $1.1x10^{-4}$ °F^{-1} ($2x10^{-4}$ °C^{-1})
Operating temperature: -40 to 176°F (-40 to +80°C)

1004

Copri profilo 3 mm / *Bar cap 3 mm / Abdeckprofil 3 mm*

Fit on 3 mm

Part	Article-Nr.	L	Colour	Availability	Supply
1004	100403-30	30 m	white	On request	30 m coils

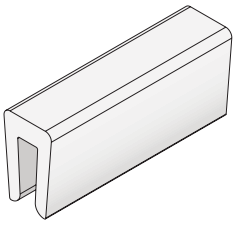

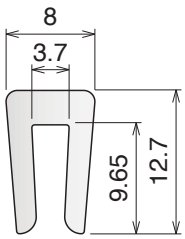

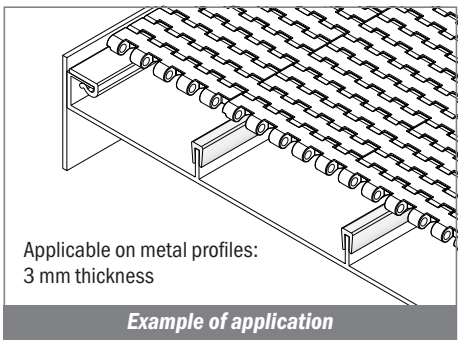

Example of application

1006

Copri profilo 5 mm / *Bar cap 5 mm / Abdeckprofil 5 mm*

Fit on 5 mm

Part	Article-Nr.	L	Colour	Availability	Supply
1006	100603-30	30 m	white	On request	30 m coils

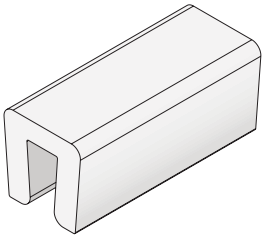

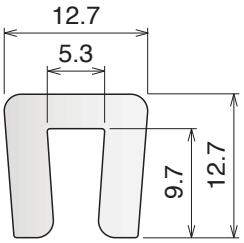

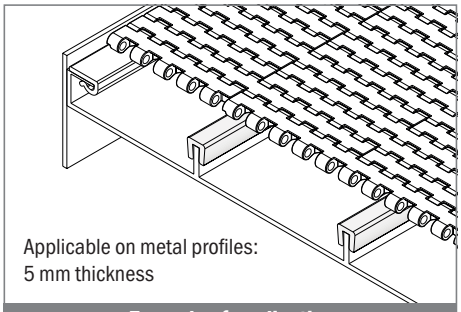

Example of application

153

Copri profilo 5 mm / *Bar cap 5 mm / Abdeckprofil 5 mm*

Fit on 4/5 mm

Part	Article-Nr.	L	Colour	Availability	Supply
153	15302	6 m	green	On request	30 m coils
153	15302C	3 m	green	On request	3 m bars
153	15303	6 m	white	On request	6 m bars
153	15303-30	30 m	white	Stock item	30 m coils
153	15300	6 m	BluLub	Stock item	6 m bars
153	15300-30	30 m	BluLub	Stock item	30 m coils
153	15300C	3 m	BluLub	On request	3 m bars

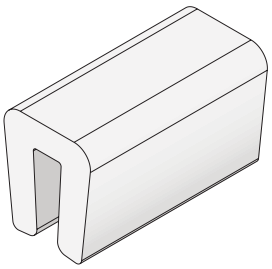

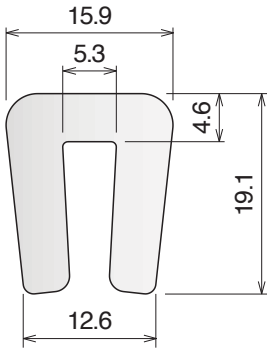

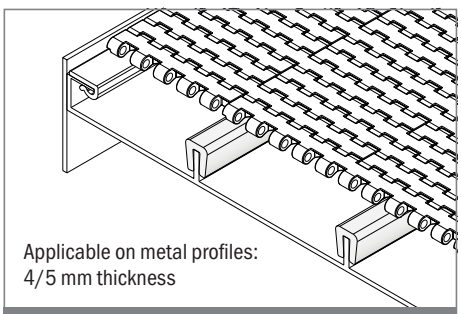

Example of application

Material:
Polyethylene UHMW-PE with molecular density 5,600,000 g/mol
Linear expansion coefficient: 1.1x10^{-4} °F^{-1} (2x10^{-4} °C^{-1})
Operating temperature: -40 to 176°F (-40 to +80°C)

1007

Copri profilo 5 mm / *Bar cap 5 mm / Abdeckprofil 5 mm*

Fit on 5 mm

Part	Article-Nr.	L	Colour	Availability	Supply
1007	100703	6 m	white	On request	6 m bars
1007	100703B	6 m	BluLub	On request	6 m bars

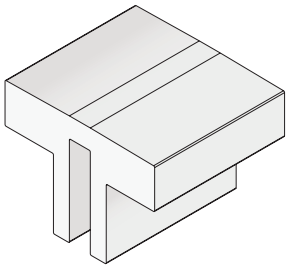

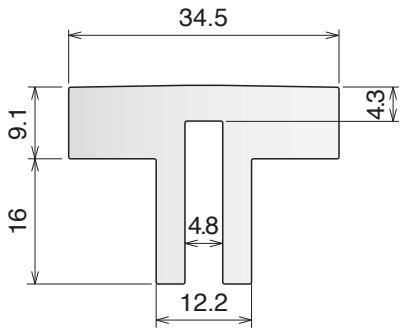

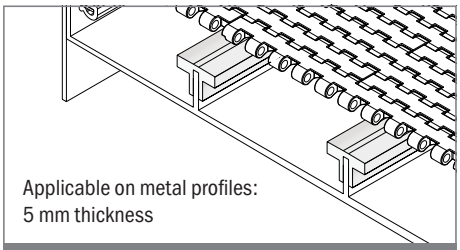

Example of application

1008

Copri profilo 5 mm / *Bar cap 5 mm / Abdeckprofil 5 mm*

Fit on 5 mm

Part	Article-Nr.	L	Colour	Availability	Supply
1008	100803	6 m	white	On request	6 m bars
1008	100803B	6 m	BluLub	On request	6 m bars

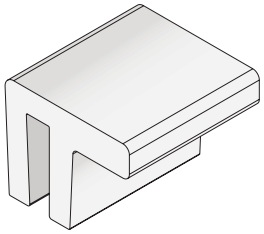

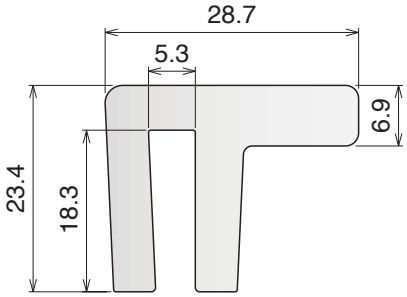

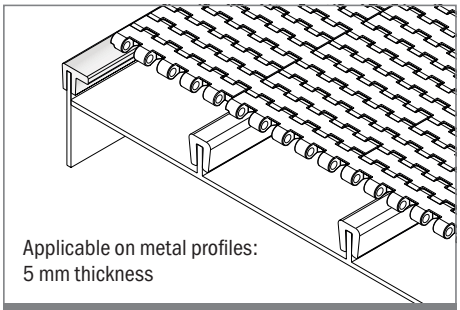

Example of application

1009

Copri profilo 6 mm / *Bar cap 6 mm / Abdeckprofil 6 mm*

Fit on 6 mm

Part	Article-Nr.	L	Colour	Availability	Supply
1009	100903-30	30 m	white	On request	30 m coils

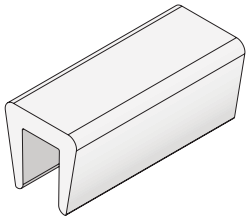

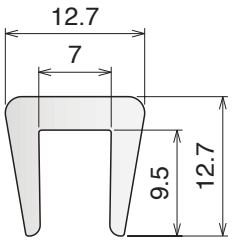

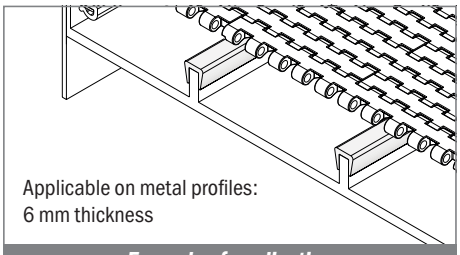

Example of application

1010

Copri profilo 6 mm / *Bar cap 6 mm / Abdeckprofil 6 mm*

Fit on 6 mm

Part	Article-Nr.	L	Colour	Availability	Supply
1010	101003-30	30 m	white	On request	30 m coils

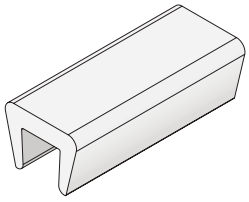

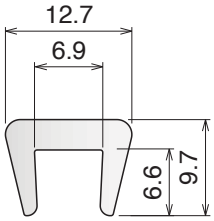

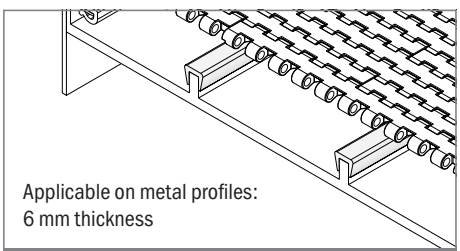

Example of application

Material:
Polyethylene UHMW-PE with molecular density 5,600,000 g/mol
Linear expansion coefficient: 1.1x10^{-4} °F^{-1} (2x10^{-4} °C^{-1})
Operating temperature: -40 to 176°F (-40 to +80°C)

1011

Copri profilo 10 mm / *Bar cap 10 mm / Abdeckprofil 10 mm*

Fit on 10 mm

Part	Article-Nr.	L	Colour	Availability	Supply
1011	101103-30	30 m	white	On request	30 m coils
1011	101103-60	60 m	white	On request	60 m coils

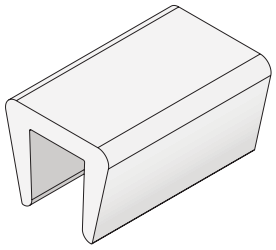

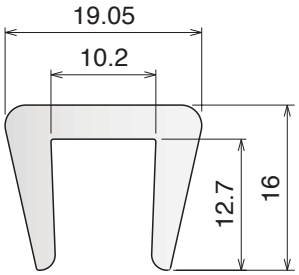

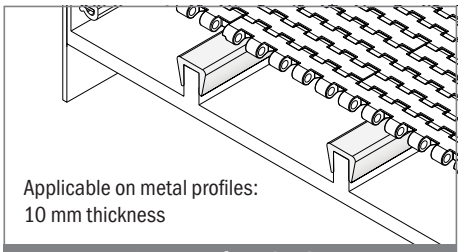

Example of application

1012

Copri profilo 12-13 mm / *Bar cap 12-13 mm / Abdeckprofil 12-13 mm*

Fit on 12/13 mm

Part	Article-Nr.	L	Colour	Availability	Supply
1012	101203-30	30 m	white	On request	30 m coils

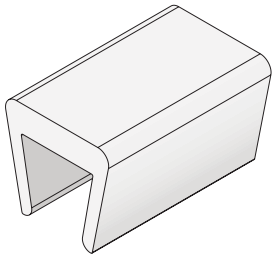

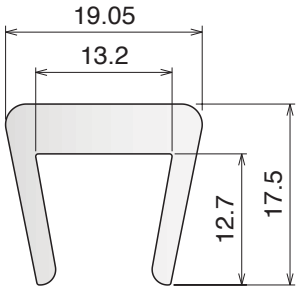

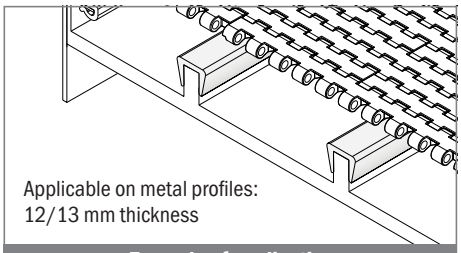

Example of application

1013

Copri profilo 10 mm / *Bar cap 10 mm / Abdeckprofil 10 mm*

Fit on 10 mm

Part	Article-Nr.	L	Colour	Availability	Supply
1013	101303	6 m	white	On request	6 m coils

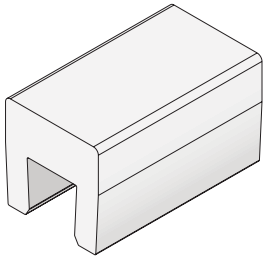

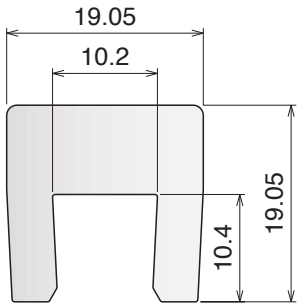

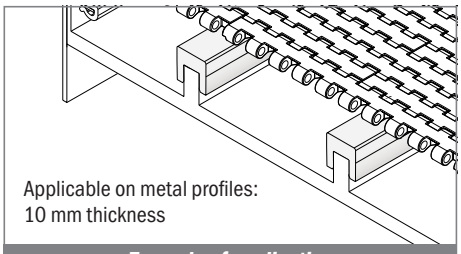

Example of application

1040

Guide tappeto / *Belt side guide / Seitentükuung für matterkette*

Fit on 3 mm

Part	Article-Nr.	L	Colour	Availability	Supply
1040	104003C	3 m	white	On request	3 m bars
1040	104003	6 m	white	On request	6 m bars

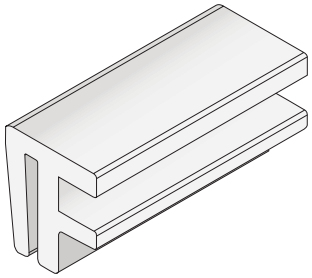

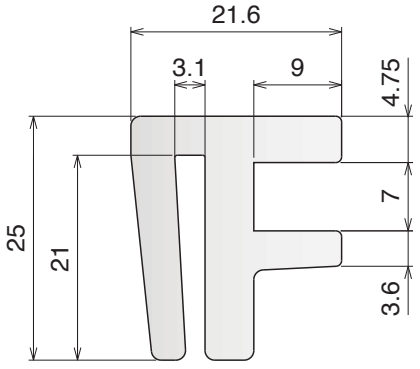

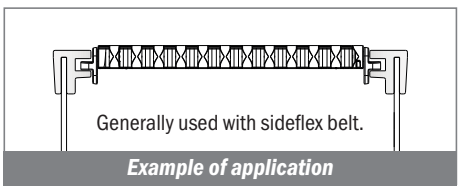

Example of application

Material:
Polyethylene UHMW-PE with molecular density 5,600,000 g/mol
Linear expansion coefficient: $1.1x10^{-4}$ °F^{-1} ($2x10^{-4}$ °C^{-1})
Operating temperature: -40 to 176°F (-40 to +80°C)

119

Guida conica tonda / *Guide rail round / konische Führung rund*

Supply: 3/6 m bars

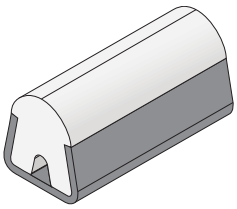

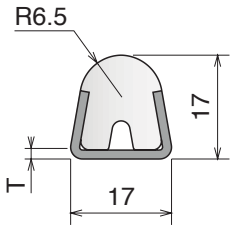

Part	Article-Nr.	L	T	Metal profile	Colour	Availability	Type
119	11963	3 m	1.9	AISI 304	white	Stock item	
119	11967	6 m	1.9	AISI 304	white	On request	
119	11963B	3 m	1.9	AISI 304	BluLub	On request	
119	11967B	6 m	1.9	AISI 304	BluLub	On request	
119	11901C	3 m	1.5	AISI 304	white	Stock item	
119	11901	6 m	1.5	AISI 304	white	Stock item	
119	11901BC	3 m	1.5	AISI 304	BluLub	Stock item	
119	11901B	6 m	1.5	AISI 304	BluLub	Stock item	

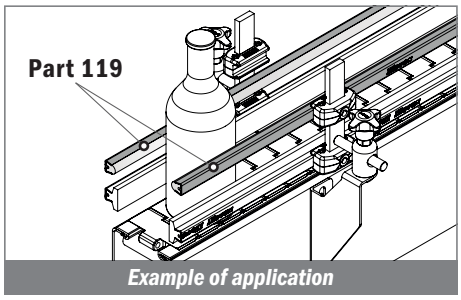

Example of application

120

Guida conica semitonda / *Guide rail modified / konische Führung halbrund*

Supply: 3/6 m bars

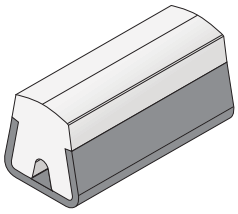

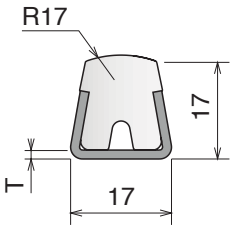

Part	Article-Nr.	L	T	Metal profile	Colour	Availability	Type
120	12063	3 m	1.9	AISI 304	white	Stock item	
120	12067	6 m	1.9	AISI 304	white	On request	
120	12063B	3 m	1.9	AISI 304	BluLub	On request	
120	12067B	6 m	1.9	AISI 304	BluLub	On request	
120	12001C	3 m	1.5	AISI 304	white	Stock item	
120	12001	6 m	1.5	AISI 304	white	Stock item	
120	12001BC	3 m	1.5	AISI 304	BluLub	Stock item	
120	12001B	6 m	1.5	AISI 304	BluLub	Stock item	

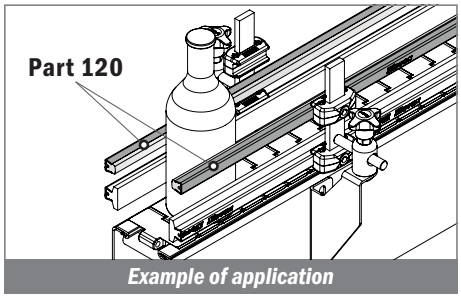

Example of application

121

Guida conica piatta / *Guide rail flat / konische Führung flach*

Supply: 3/6 m bars

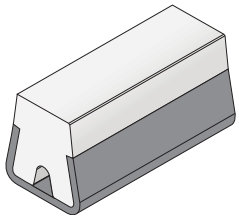

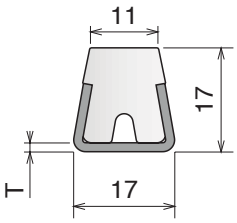

Part	Article-Nr.	L	T	Metal profile	Colour	Availability	Type
121	12163	3 m	1.9	AISI 304	white	On request	
121	12167	6 m	1.9	AISI 304	white	On request	
121	12163B	3 m	1.9	AISI 304	BluLub	On request	
121	12167B	6 m	1.9	AISI 304	BluLub	On request	
121	12101C	3 m	1.5	AISI 304	white	Stock item	
121	12101	6 m	1.5	AISI 304	white	Stock item	
121	12101BC	3 m	1.5	AISI 304	BluLub	Stock item	
121	12101B	6 m	1.5	AISI 304	BluLub	Stock item	

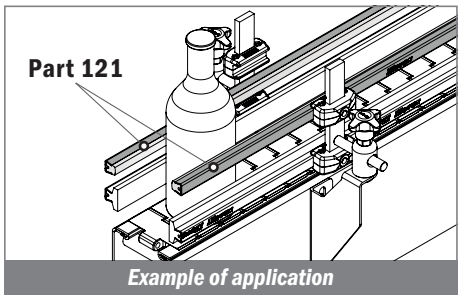

Example of application

Material:
Metal profile: Stainless steel
Plastic profile: UHMW-PE

152 Guida conica 25° / *Guide rail 25° / konische Führung 25°*

Supply: 3 m bars

Part	Article-Nr.	L	T	Metal profile	Colour	Availability	Type
152	15263	3 m	1.9	AISI 304	white	On request	
152	15201C	3 m	1.5	AISI 304	white	Stock item	

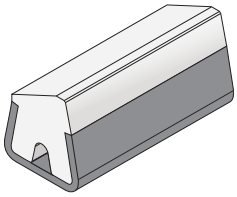

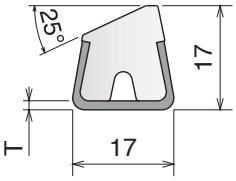

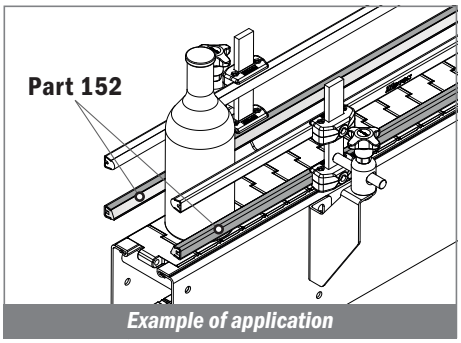

Example of application

1067 Guida conica H 18 / *Guide rail H 18 / konische Führung H 18*

Supply: 3 m bars

Part	Article-Nr.	L	T	Metal profile	Colour	Availability	Type
1067	106763	3 m	1.9	AISI 304	white	On request	
1067	106701C	3 m	1.5	AISI 304	white	On request	

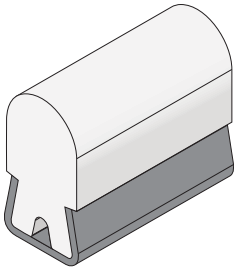

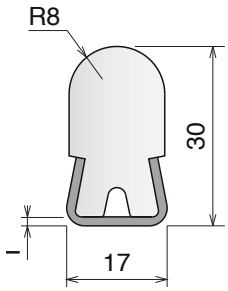

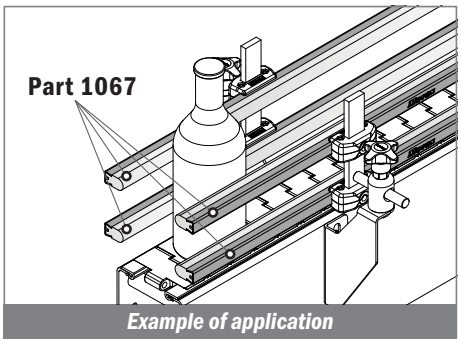

Example of application

122 Guida conica profilo a T 25,4 mm / *Guide rail T-shape 25,4 mm / konische Führung flach (T) 25,4 mm*

Supply: 3 m bars

Part	Article-Nr.	L	T	Metal profile	Colour	Availability	Type
122	12263	3 m	1.9	AISI 304	white	Stock item	
122	12201C	3 m	1.5	AISI 304	white	Stock item	

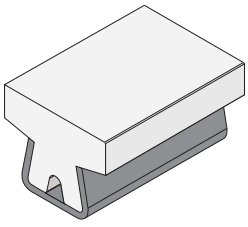

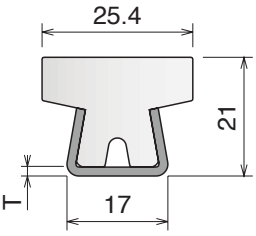

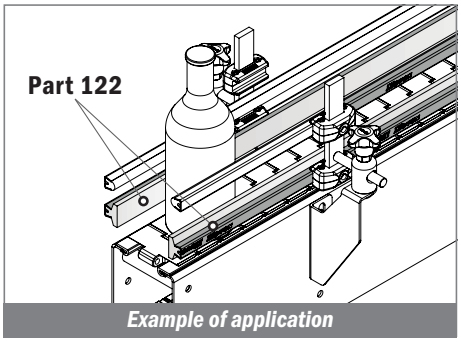

Example of application

Material:
Metal profile: Stainless steel
Plastic profile: UHMW-PE

123

Guida conica profilo a T 31,75 mm / ***Guide rail T-shape 31,75 mm / konische Führung flach (T) 31,75 mm***

Supply: 3 m bars

Part	Article-Nr.	L	T	Metal profile	Colour	Availability	Type
123	12363	3 m	1.9	AISI 304	white	Stock item	
123	12301C	3 m	1.5	AISI 304	white	Stock item	

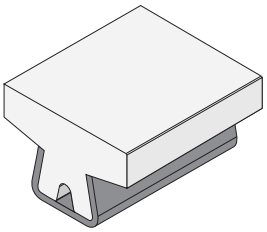

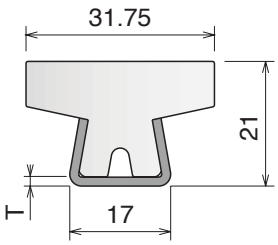

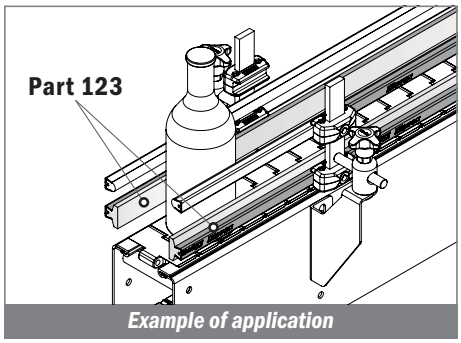

Example of application

140

Guida conica profilo a T 25,4 mm / ***Guide rail T-shape 25,4 mm / konische Führung flach (T) 25,4 mm***

Supply: 3 m bars

Part	Article-Nr.	L	T	Metal profile	Colour	Availability	Type
140	14063	3 m	1.9	AISI 304	white	Stock item	
140	14001C	3 m	1.5	AISI 304	white	Stock item	

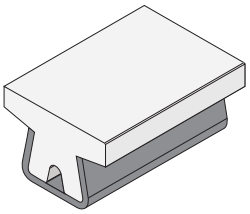

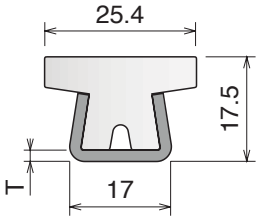

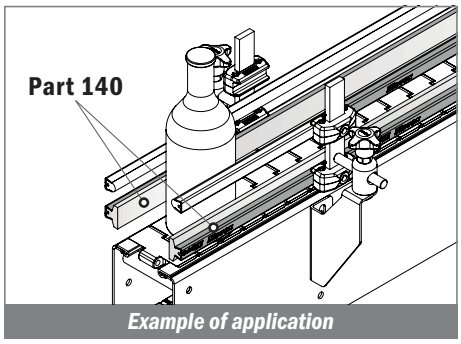

Example of application

146

Guida conica profilo a T 31,75 mm / ***Guide rail T-shape 31,75 mm / konische Führung flach (T) 31,75 mm***

Supply: 3 m bars

Part	Article-Nr.	L	T	Metal profile	Colour	Availability	Type
146	14663	3 m	1.9	AISI 304	white	On request	
146	14601C	3 m	1.5	AISI 304	white	Stock item	

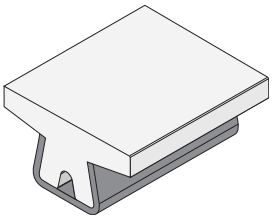

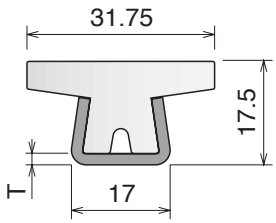

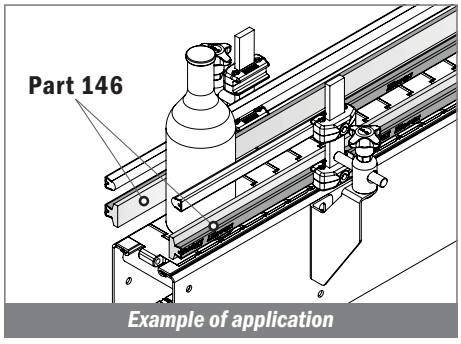

Example of application

Material:
Metal profile: Stainless steel
Plastic profile: UHMW-PE

124

Guida conica profilo a T 40 mm / *Guide rail T-shape 40 mm / konische Führung flach (T) 40 mm*

Supply: 3 m bars

Part	Article-Nr.	L	T	Metal profile	Colour	Availability	Type
124	12463	3 m	1.9	AISI 304	white	On request	
124	12401C	3 m	1.5	AISI 304	white	Stock item	

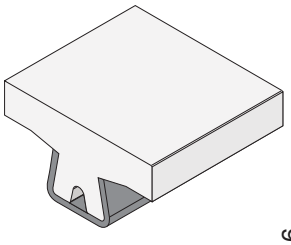

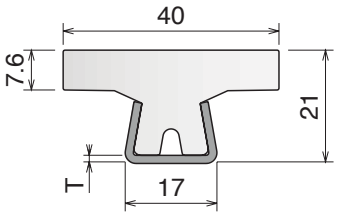

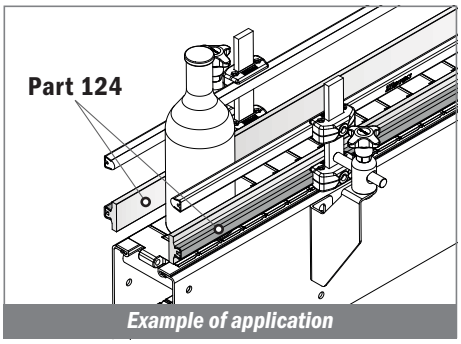

Example of application

143

Guida conica profilo a "T" 19,05 mm / *Guide rail T-shape 19,05 mm / konische Führung flach (T) 19,05 mm*

Supply: 3 m bars

Part	Article-Nr.	L	T	Metal profile	Colour	Availability	Type
143	14363	3 m	1.9	AISI 304	white	On request	
143	14301C	3 m	1.5	AISI 304	white	Stock item	

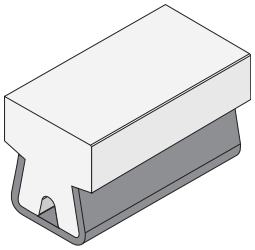

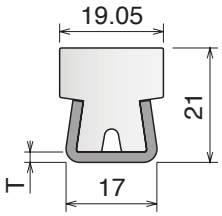

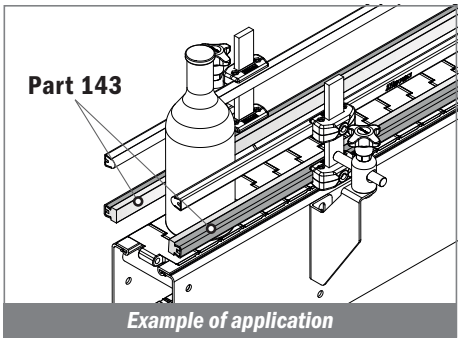

Example of application

141

Guida conica profilo a "T" 57,15 mm / *Guide rail T-shape 57,15 mm / konische Führung flach (T) 57,15 mm*

Supply: 3 m bars

Part	Article-Nr.	L	T	Metal profile	Colour	Availability	Type
141	14163	3 m	1.9	AISI 304	white	On request	
141	14101C	3 m	1.5	AISI 304	white	Stock item	

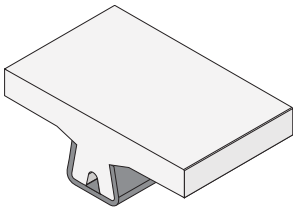

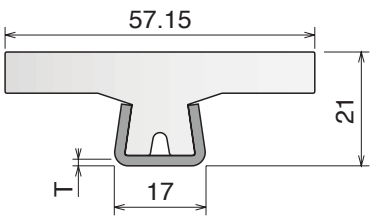

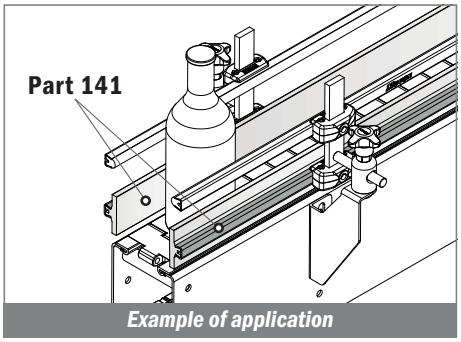

Example of application

Material:
Metal profile: Stainless steel
Plastic profile: UHMW-PE

142

Guida conica profilo a "T" 43,2 mm / *Guide rail T-shape 43,2 mm / konische Führung flach (T) 43,2 mm*

Supply: 3 m bars

Part	Article-Nr.	L	T	Metal profile	Colour	Availability	Type
142	14263	3 m	1.9	AISI 304	white	On request	
142	14201C	3 m	1.5	AISI 304	white	Stock item	

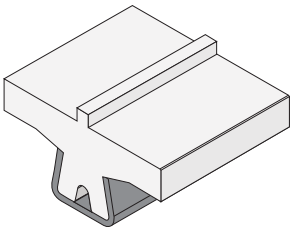

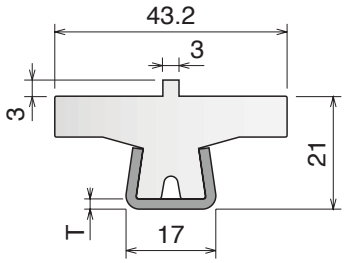

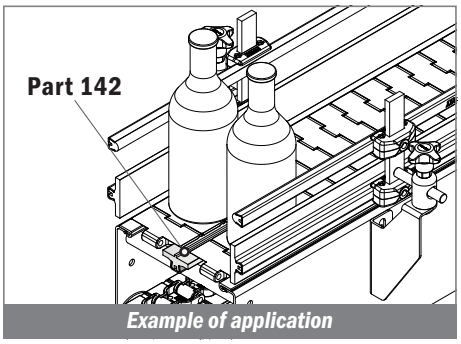

Example of application

125

Guida conica profilo a "L" 31,75 mm / *Guide rail L-shape 31,75 mm / konische Führung flach (L) 31,75 mm*

Supply: 3 m bars

Part	Article-Nr.	L	T	Metal profile	Colour	Availability	Type
125	12563	3 m	1.9	AISI 304	white	Stock item	
125	12501C	3 m	1.5	AISI 304	white	Stock item	

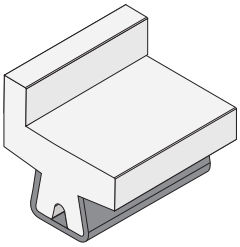

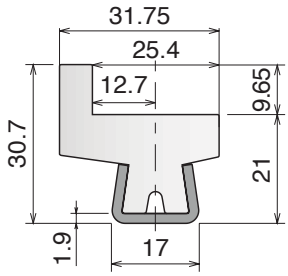

PART **12563**

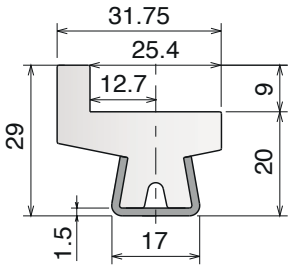

PART **12501C**

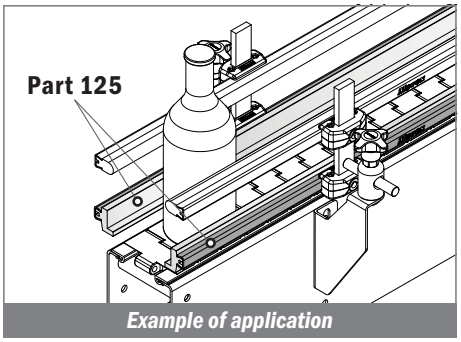

Example of application

144

Guida conica profilo a "L" 31,75 mm / *Guide rail L-shape 31,75 mm / konische Führung flach (L) 31,75 mm*

Supply: 3 m bars

Part	Article-Nr.	L	T	Metal profile	Colour	Availability	Type
144	14463	3 m	1.9	AISI 304	white	Stock item	
144	14401C	3 m	1.5	AISI 304	white	Stock item	

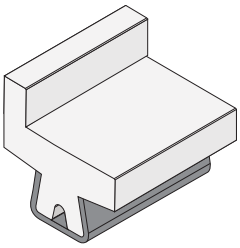

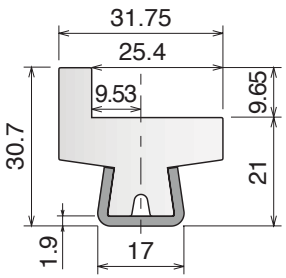

PART **14463**

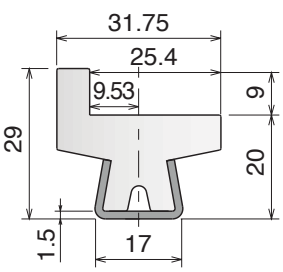

PART **14401C**

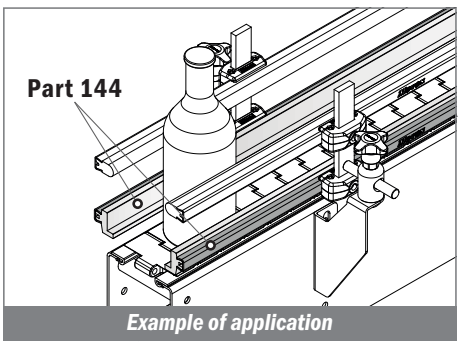

Example of application

184-191-145

Material:
Metal profile: Stainless steel
Plastic profile: UHMW-PE

184 Guida conica per catena / *Guide rail for chain / konische Führung*

Supply: 3 m bars

Part	Article-Nr.	L	T	Metal profile	Colour	Availability	Type
184	18463	3 m	1.9	AISI 304	white	On request	
184	18401C	3 m	1.5	AISI 304	white	Stock item	

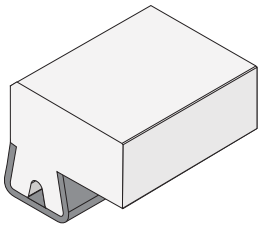

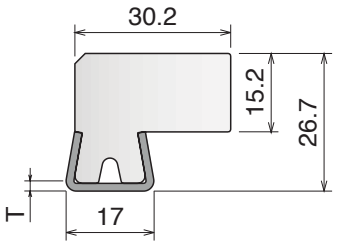

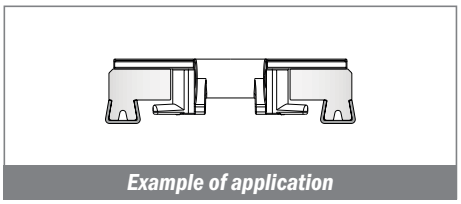

Example of application

191 Guida conica per catena / *Guide rail for chain / konische Führung*

Supply: 3 m bars

Part	Article-Nr.	L	T	Metal profile	Colour	Availability
191	19101C	3 m	1.9	AISI 304	white	On request

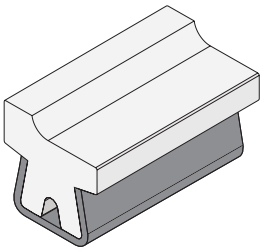

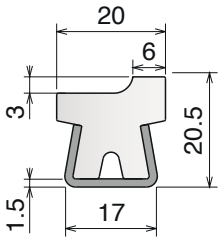

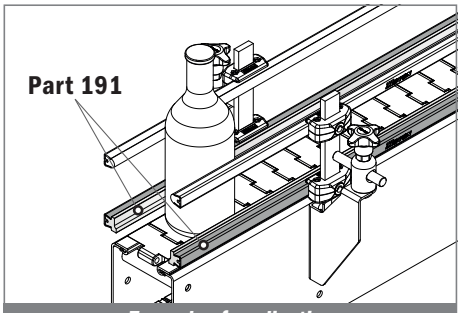

Example of application

145 Guida tappeto / *Belt side guide / Seitenführung für Mattenkette*

Supply: 3 m bars

Part	Article-Nr.	L	T	Metal profile	Material	Availability	Type
145	14563	3 m	1.9	AISI 304	BluLub	On request	
145	14503C	3 m	1.5	AISI 304	BluLub	Stock item	

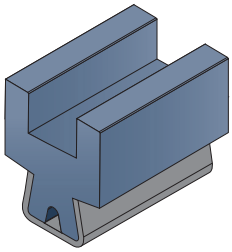

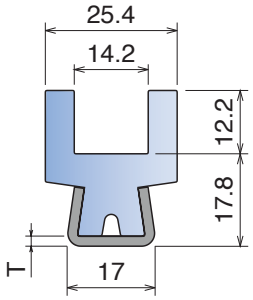

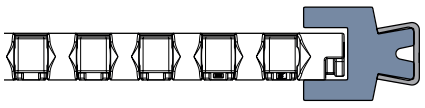

Bendable profile, generally used with sideflexing belt 600 series.

Example of application

Material:
Polyethylene UHMW-PE with molecular density 5,600,000 g/mol
Linear expansion coefficient: 1.1x10^{-4} °F^{-1} (2x10^{-4} °C^{-1})
Operating temperature: -40 to 176°F (-40 to +80°C)

130

Profilo in alluminio / *Aluminum rail for bottle guide / Aluminium profil*

Part	Article-Nr.	L	Material	Type	Availability	Supply
130	13001C	3 m	Aluminium	A	Stock item	3 m bars
130	13001	6 m	Aluminium	A	On request	6 m bars
130	13002C	3 m	Aluminium	B	On request	3 m bars

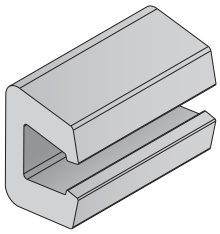

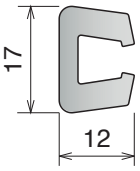

Type A

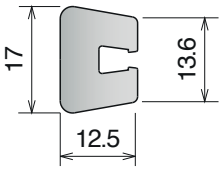

Type B

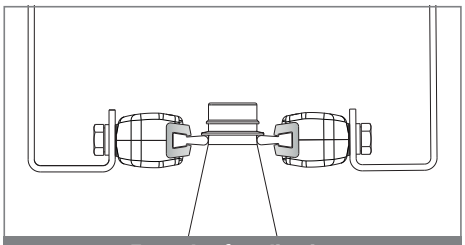

Example of application

188

Profilo in alluminio / *Aluminum rail for bottle guide / Aluminium profil*

Part	Article-Nr.	L	Material	Availability	Supply
188	18801C	3 m	Aluminium	Stock item	3 m bars
188	18801	6 m	Aluminium	On request	6 m bars

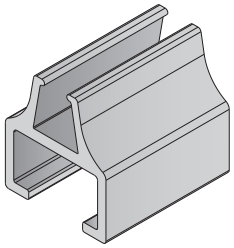

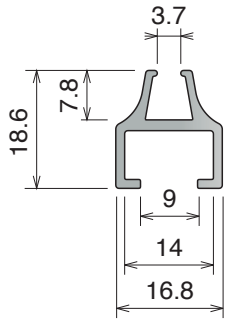

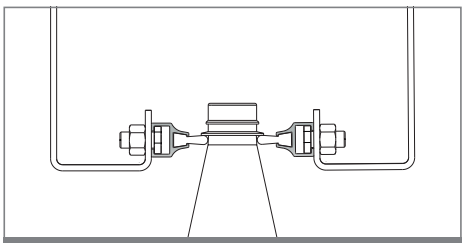

Example of application

131

Profilo guida bottiglia / *Plastic rail for bottle guide / Flaschenführungs profil*

Supply: 3 / 6 m bars

Part	Article-Nr.	Type	Colour	Availability
131	13101B	A	BluLub	Stock item
131	13101	A	grey	Stock item
131	13102B	B	BluLub	On request
131	13102	B	grey	On request

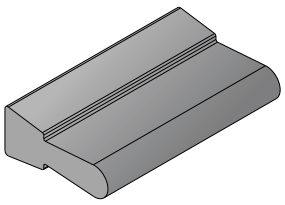

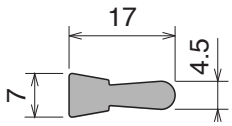

Type A

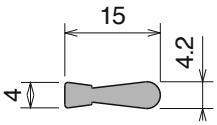

Type B

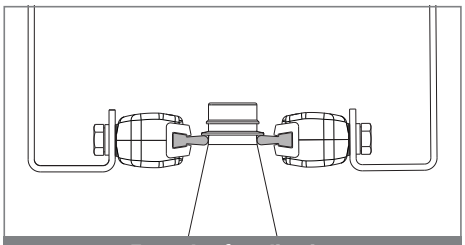

Example of application

199

Macchina curvatrice / *Bending machine / Biegemaschine*

Part	Article-Nr.
199	19999



Material:
Polyethylene UHMW-PE with molecular density 5,600,000 g/mol
Linear expansion coefficient: 1.1x10^{-4} °F^{-1} (2x10^{-4} °C^{-1})
Operating temperature: -40 to 176°F (-40 to +80°C)

151 Rulli per macchina curvatrice / *Roller for bending machine / Rollen für Biegemaschine*



Internal curve



External curve

Part	Article-Nr.	Suitable for Part.
151	15101	119 - 120 - 121 - 152



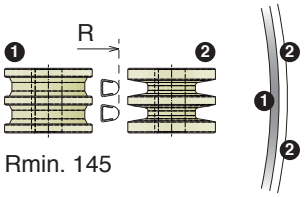

Rmin. 145

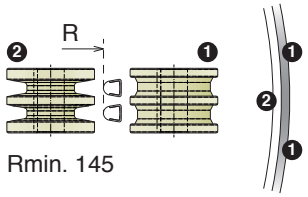

Rmin. 145

Part	Article-Nr.	Suitable for Part.
151	15102	122 - 123 - 124 - 142 - 140 - 146

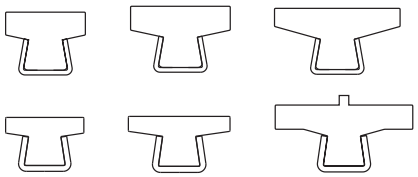

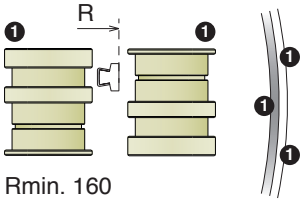

Rmin. 160

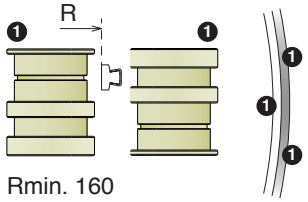

Rmin. 160

Part	Article-Nr.	Suitable for Part.
151	15103	141

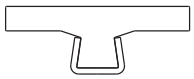

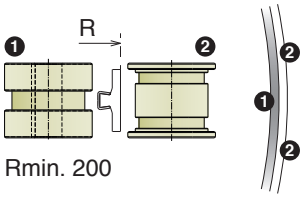

Rmin. 200

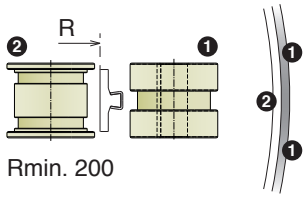

Rmin. 200

Part	Article-Nr.	Suitable for Part.
151	15104	144

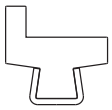

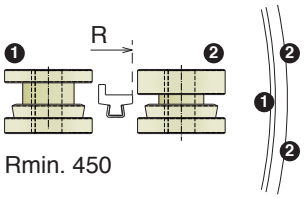

Rmin. 450

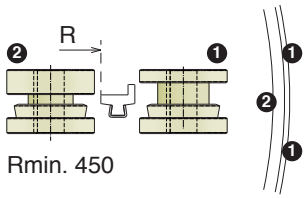

Rmin. 450

Part	Article-Nr.	Suitable for Part.
151	15105	*for Ø8-Ø10-Ø12 - Ø1/2"-Ø5/8"*

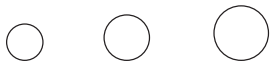

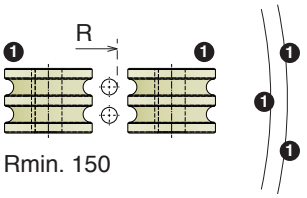

Rmin. 150

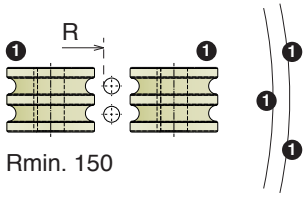

Rmin. 150

Material:
Polyethylene UHMW-PE with molecular density 5,600,000 g/mol
Linear expansion coefficient: 1.1x10^{-4} °F^{-1} (2x10^{-4} °C^{-1})
Operating temperature: -40 to 176°F (-40 to +80°C)

151 Rulli per macchina curvatrice / *Roller for bending machine / Rollen für Biegemaschine*



Internal curve



External curve

Part	Article-Nr.	Suitable for Part.
151	15109	358



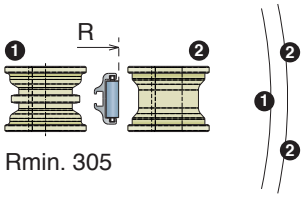

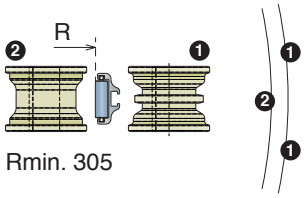

Part	Article-Nr.	Suitable for Part.
151	15110	360



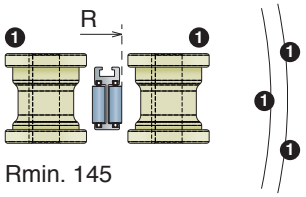

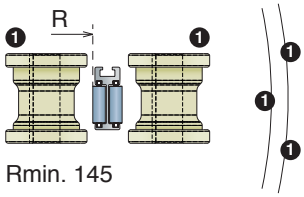

Part	Article-Nr.	Suitable for Part.
151	15106	359



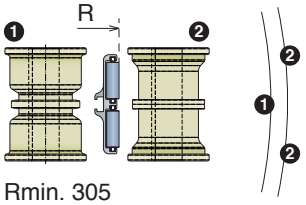

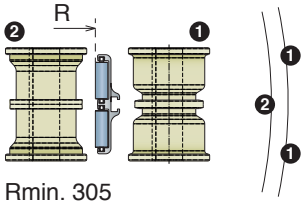

Part	Article-Nr.	Suitable for Part.
151	15107	361

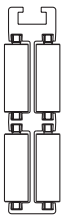

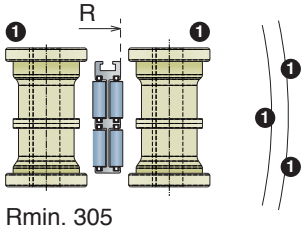

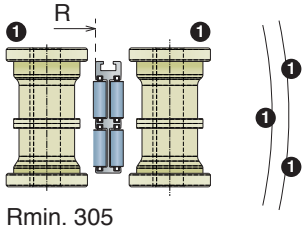

Part	Article-Nr.	Suitable for Part.
151	15108	117



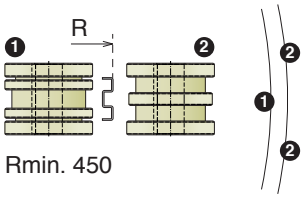

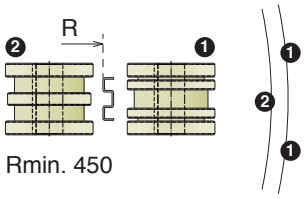

170-168-169-1036

Guide estruse / *Extruded profiles / Extrudiertes profil*

Material: Polyethylene UHMW-PE with molecular density 9,200,000 g/mo. **BluLub®** *new material with reduced coefficient of friction and higher wear resistence. BluLub complies with the code of Federal Regulations of FDA. Linear expansion coefficient: 1.1x10⁻⁴ °F⁻¹ (2x10⁻⁴ °C⁻¹) Operating temperature: -40 to 176 °F (-40 to +80 °C)*

170

Guida collo / *Neck guide / Nackenführung*

Part	Article-Nr.	L	Material	Availability	Supply
170	17001B	3 m	BluLub	Stock item	3 m bars
170	17002B	6 m	BluLub	On request	6 m bars
170	17000B	30 m	BluLub	On request	30 m coils

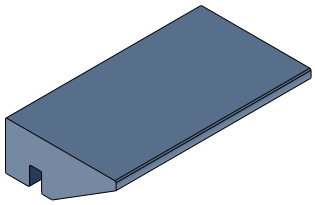

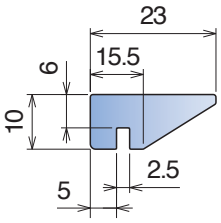

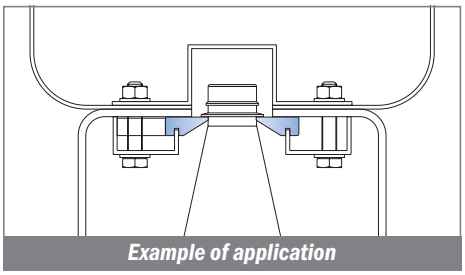

Example of application

168

Guida collo / *Neck guide / Nackenführung*

Part	Article-Nr.	L	Material	Availability	Supply
168	16801B	3 m	BluLub	Stock item	3 m bars
168	16802B	6 m	BluLub	On request	6 m bars
168	16800B	30 m	BluLub	On request	30 m coils

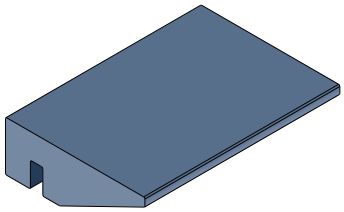

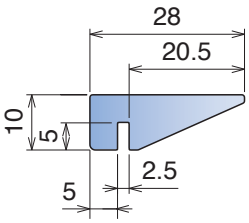

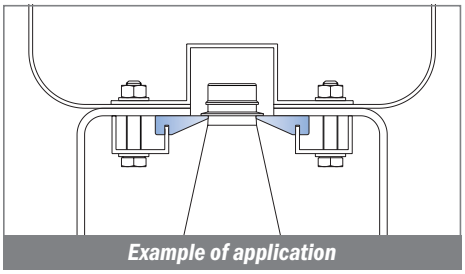

Example of application

169

Guida collo / *Neck guide / Nackenführung*

Part	Article-Nr.	L	Material	Availability	Supply
169	16901B	3 m	BluLub	Stock item	3 m bars
169	16902B	6 m	BluLub	On request	6 m bars
169	16900B	30 m	BluLub	On request	30 m coils

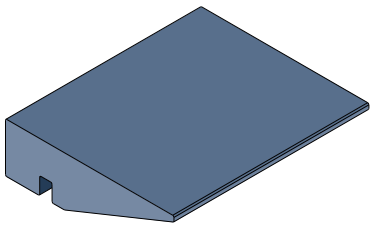

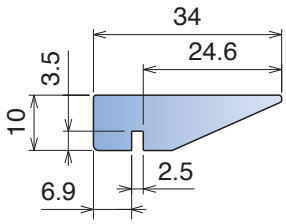

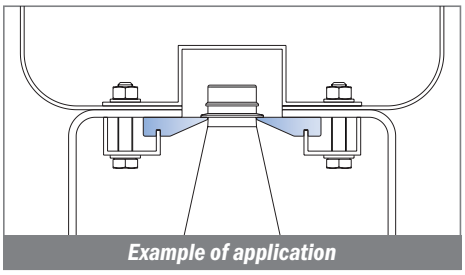

Example of application

1036

Guida collo / *Neck guide / Nackenführung*

Fit on 1.8 - 2 mm

Part	Article-Nr.	L	Material	Availability	Supply
1036	103600B	30 m	BluLub	Stock item	30 m coils

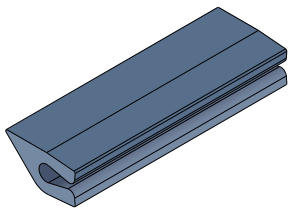

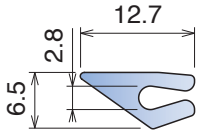

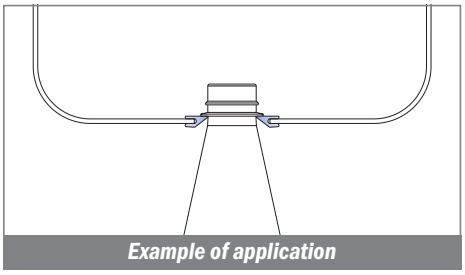

Example of application

Material: Polyethylene UHMW-PE with molecular density 9,200,000 g/mo. **BluLub®** *new material with reduced coefficient of friction and higher wear resistence. BluLub complies with the code of Federal Regulations of FDA. Linear expansion coefficient: 1.1x10⁻⁴ °F⁻¹ (2x10⁻⁴ °C⁻¹) Operating temperature: -40 to 176°F (-40 to +80°C)*

1037

Guida collo / *Neck guide / Nackenführung*

Fit on 3 mm

Part	Article-Nr.	L	Material	Availability	Supply
1037	103700B	30 m	BluLub	Stock item	30 m coils

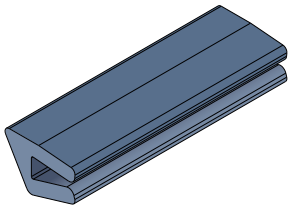

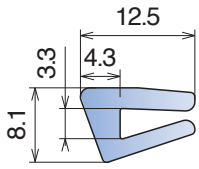

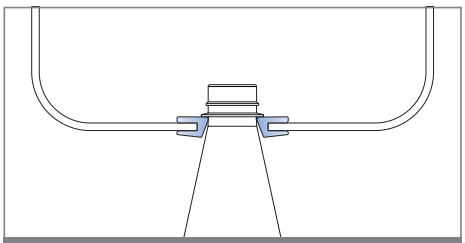

Example of application

167

Guida collo / *Neck guide / Nackenführung*

Fit on 1.8 - 2 mm

Part	Article-Nr.	L	Material	Availability	Supply
167	16700BC	3 m	BluLub	Stock item	3 m bars
167	16700B	6 m	BluLub	Stock item	6 m bars
167	16700B-30	30 m	BluLub	Stock item	30 m coils
167	16700B-75	75 m	BluLub	Stock item	75 m coils

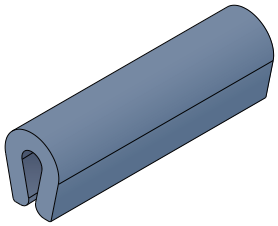

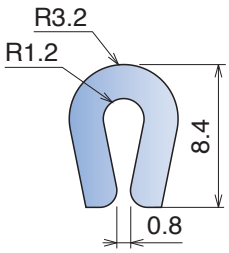

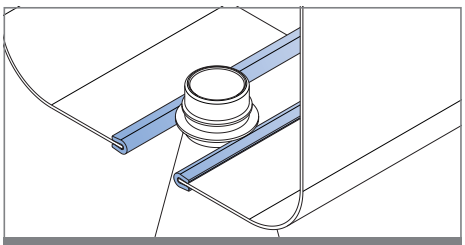

Example of application

171

Guida collo / *Neck guide / Nackenführung*

Fit on 3 mm

Part	Article-Nr.	L	Material	Availability	Supply
171	17100B	30 m	BluLub	Stock item	30 m coils

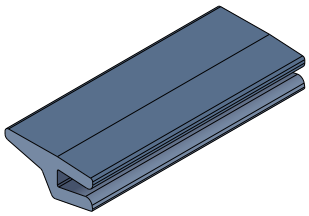

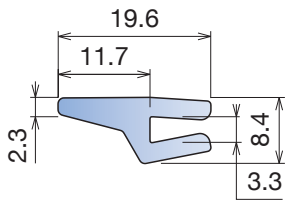

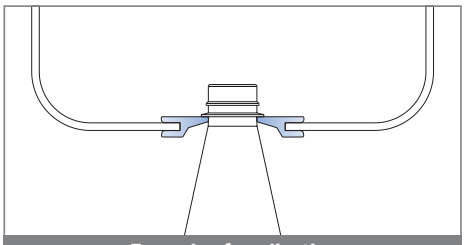

Example of application

172

Guida collo / *Neck guide / Nackenführung*

Fit on 3 mm

Part	Article-Nr.	L	Material	Availability	Supply
172	17200B	30 m	BluLub	Stock item	30 m coils

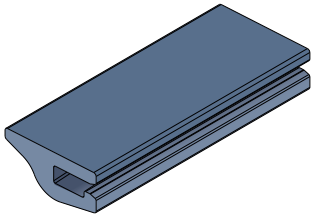

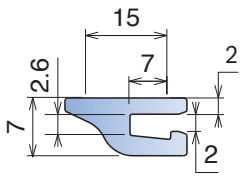

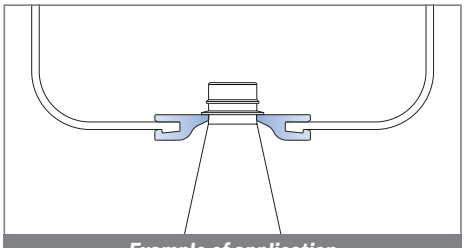

Example of application

173-192-1062-1068

Guide estruse / *Extruded profiles / Extrudiertes profil*

Material: Polyethylene UHMW-PE with molecular density 9,200,000 g/mo. **BluLub®** *new material with reduced coefficient of friction and higher wear resistence. BluLub complies with the code of Federal Regulations of FDA. Linear expansion coefficient: 1.1x10⁻⁴ °F⁻¹ (2x10⁻⁴ °C⁻¹) Operating temperature: -40 to 176 °F (-40 to +80 °C)*

173

Guida collo / *Neck guide / Nackenführung*

Fit on 1.8 - 2 mm

Part	Article-Nr.	L	Material	Availability	Supply
173	17300B	30 m	BluLub	Stock item	30 m coils

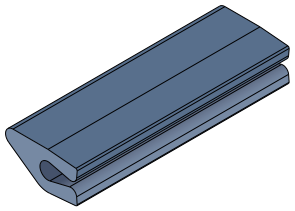

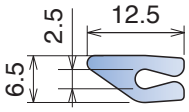

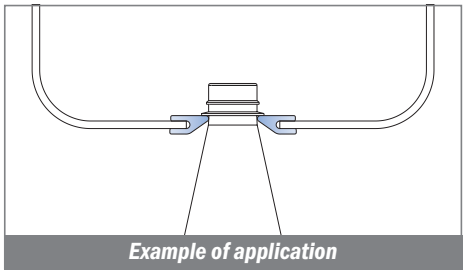

192

Guida collo / *Neck guide / Nackenführung*

Fit on 1.8 - 2 mm

Part	Article-Nr.	L	Material	Availability	Supply
192	19200B	30 m	BluLub	Stock item	30 m coils

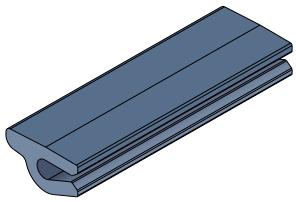

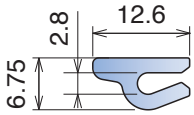

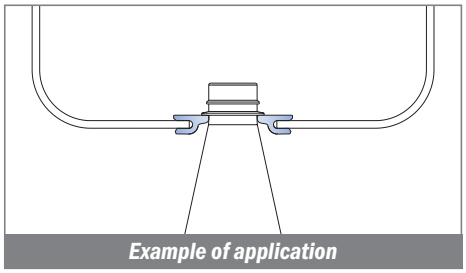

1062

Guida collo / *Neck guide / Nackenführung*

Fit on 1.8 - 2 mm

Part	Article-Nr.	L	Material	Availability	Supply
1062	106200B	30 m	BluLub	Stock item	30 m coils

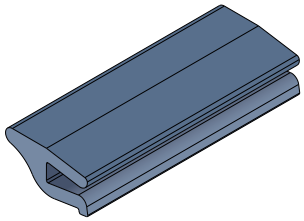

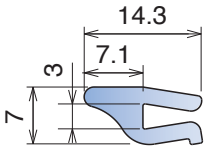

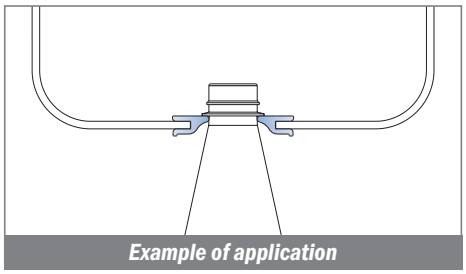

1068

Guida collo / *Neck guide / Nackenführung*

Fit on 1.8 - 2 mm

Part	Article-Nr.	L	Material	Availability	Supply
1068	106800B	30 m	BluLub	Stock item	30 m coils

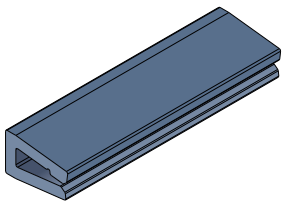

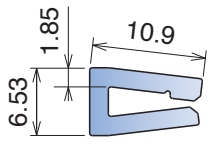

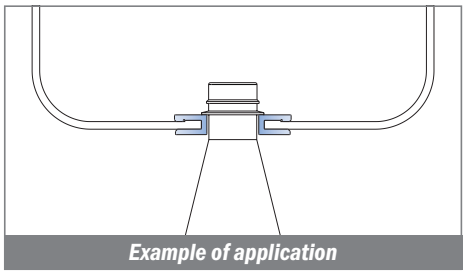

Material: Polyethylene UHMW-PE with molecular density 9,200,000 g/mo. ***BluLub®*** *new material with reduced coefficient of friction and higher wear resistence. BluLub complies with the code of Federal Regulations of FDA. Linear expansion coefficient: 1.1x10⁻⁴ °F⁻¹ (2x10⁻⁴ °C⁻¹) Operating temperature: -40 to 176 °F (-40 to +80 °C)*

1072

Guida collo / *Neck guide / Nackenführung*

Fit on 1.8 - 2 mm

Part	Article-Nr.	L	Material	Availability	Supply
1072	107200B	30 m	BluLub	Stock item	30 m coils

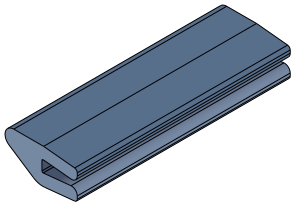

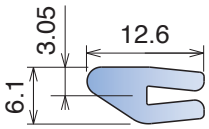

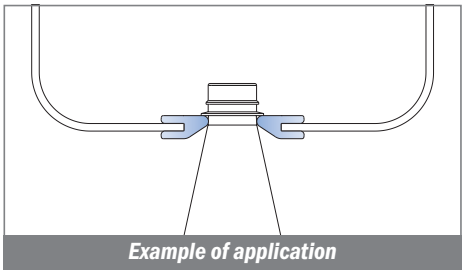
Example of application

1073

Guida collo / *Neck guide / Nackenführung*

Fit on 1.8 - 2 mm

Part	Article-Nr.	L	Material	Availability	Supply
1073	107300B	30 m	BluLub	Stock item	30 m coils

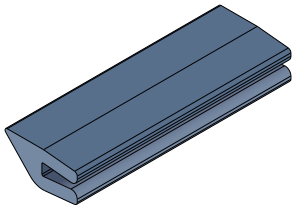

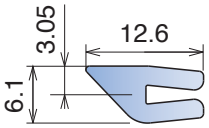

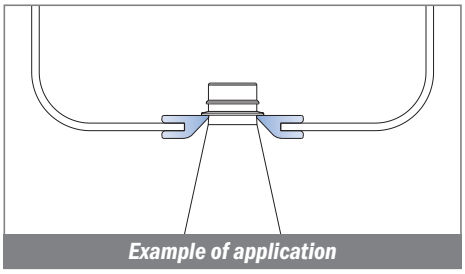
Example of application

Material:
Polyethylene UHMW-PE with molecular density 5,600,000 g/mol
Linear expansion coefficient: 1.1x10^{-4} °F^{-1} (2x10^{-4} °C^{-1})
Operating temperature: -40 to 176°F (-40 to +80°C)

163

Profilo 25 mm per guida in alluminio / *Profile 25 mm for aluminum guide / C-Profil f. Aluminiumprofil*

Coils available

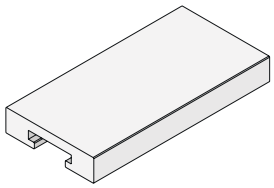

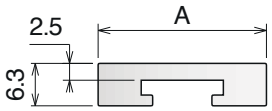

Part	Article-Nr.	A	L	Colour	Availability	Supply
163	16303C	25,4	3 m	white	Stock item	3 m bars
163	16303	25,4	6 m	white	On request	6 m bars
163	16313C	31,75	3 m	white	Stock item	3 m bars
163	16313	31,75	6 m	white	On request	6 m bars
163	16323C	35,0	3 m	white	Stock item	3 m bars
163	16323	35,0	6 m	white	On request	6 m bars
163	16324C	38,1	3 m	white	Stock item	3 m bars
163	16324	38,1	6 m	white	On request	6 m bars

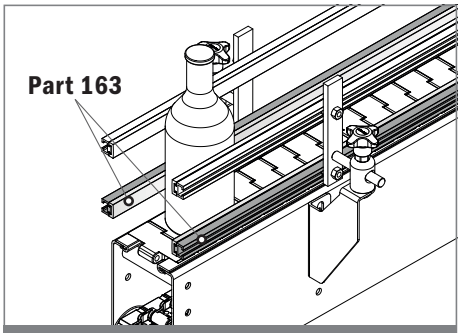

Example of application

160

Profilo 20 mm per guida in alluminio / *Profile 20 mm for aluminum guide / C-Profil f. Aluminiumprofil*

Coils available

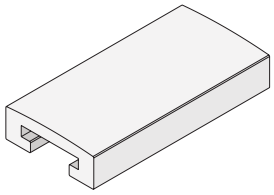

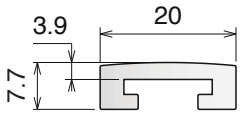

Part	Article-Nr.	L	Colour	Availability	Supply
160	16003C	3 m	white	Stock item	3 m bars
160	16003	6 m	white	On request	6 m bars

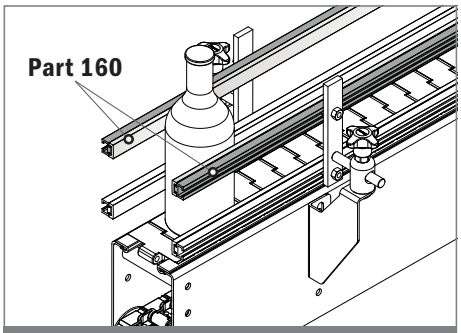

Example of application

161

Profilo 20 mm per guida in alluminio / *Profile 20 mm for aluminum guide / C-Profil f. Aluminiumprofil*

Coils available

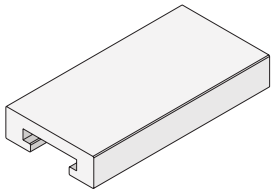

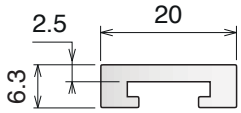

Part	Article-Nr.	L	Colour	Availability	Supply
161	16103C	3 m	white	Stock item	3 m bars
161	16103	6 m	white	On request	6 m bars

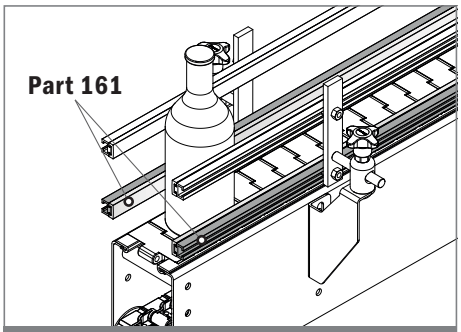

Example of application

Material:
Polyethylene UHMW-PE with molecular density 5,600,000 g/mol
Linear expansion coefficient: 1.1x10^{-4} °F^{-1} (2x10^{-4} °C^{-1})
Operating temperature: -40 to 176°F (-40 to +80°C)

162 Profilo tondo per guida in alluminio / *Round profile for aluminum guide / Pilzprofil f. Aluminiumprofil*

Coils available

Part	Article-Nr.	L	Colour	Availability	Supply
162	16202C	3 m	green	Stock item	3 m bars
162	16202	6 m	green	On request	6 m bars
162	16203C	3 m	white	Stock item	3 m bars
162	16203	6 m	white	On request	6 m bars

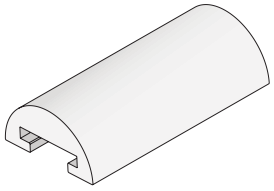

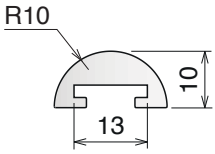

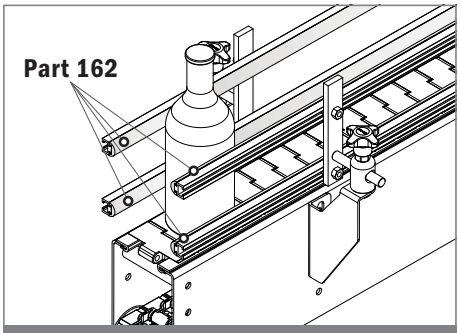

Example of application

164 Guida in alluminio / *Aluminum guide / Aluminiumprofil*

Part	Article-Nr.	L	Material	Availability	Supply
164	16401C	3 m	Aluminium	Stock item	3 m bars
164	16401	6 m	Aluminium	On request	6 m bars

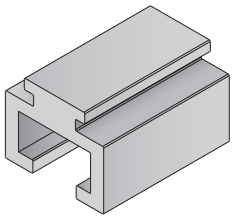

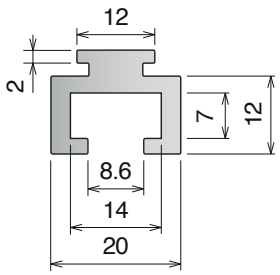

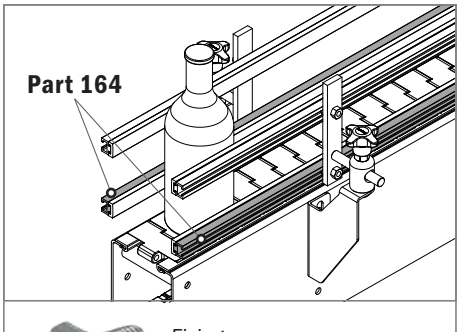


Fixing screw:
M8 hex.head or **PART 362**
Example of application

165 Guida in alluminio / *Aluminum guide / Aluminiumprofil*

Part	Article-Nr.	L	Material	Availability	Supply
165	16501C	3 m	Aluminium	Stock item	3 m bars
165	16501	6 m	Aluminium	On request	6 m bars

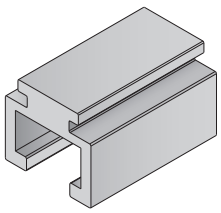

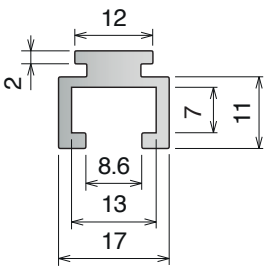

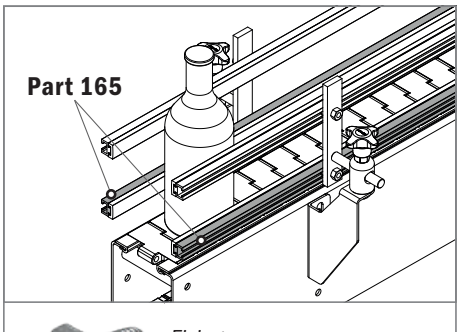


Fixing screw:
M8 hex.head or **PART 362**
Example of application

Material:
Polyethylene UHMW-PE with molecular density 5,600,000 g/mol
Linear expansion coefficient: $1.1x10^{-4}$ °F^{-1} ($2x10^{-4}$ °C^{-1})
Operating temperature: -40 to 176°F (-40 to +80°C)

154 Guida laterale / *Side guide rail / Seitenführungen*

Part	Article-Nr.	L	Colour	Availability	Supply
154	15401C	3 m	white	Stock item	3 m bars
154	15401	6 m	white	On request	6 m bars
154	15401BC	3 m	BluLub	Stock item	3 m bars
154	15401B	6 m	BluLub	On request	6 m bars

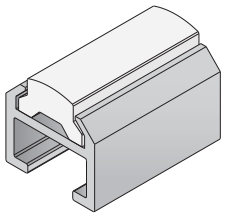

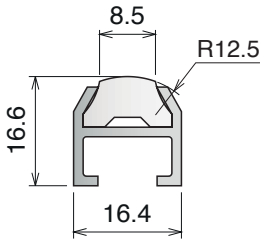

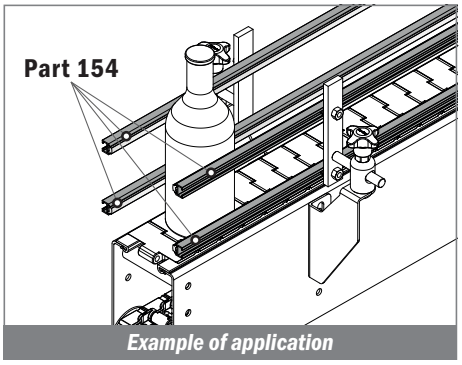

Example of application

155 Guida laterale / *Side guide rail / Seitenführungen*

Part	Article-Nr.	L	Colour	Availability	Supply
155	15501C	3 m	green	Stock item	3 m bars
155	15501	6 m	green	On request	6 m bars

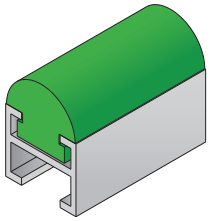

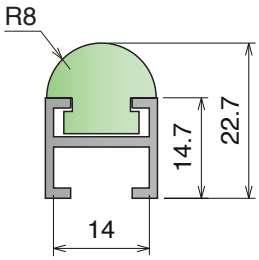

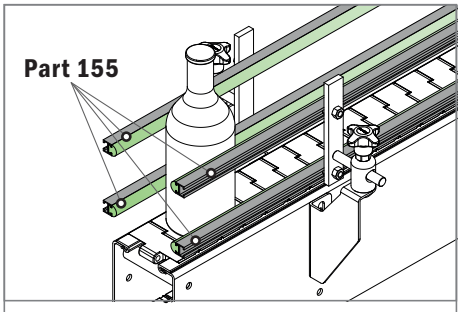


Fixing screw:
M8 hex.head or **PART 362**

Example of application

134 Guida standard / *Standard guide rail / Seitenführung*

Part	Article-Nr.	L	Colour	Availability	Supply
134	13401C	3 m	green	Stock item	3 m bars
134	13401	6 m	green	On request	6 m bars

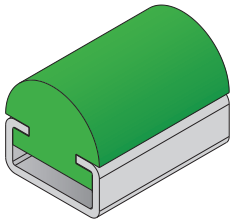

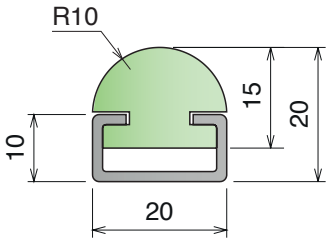

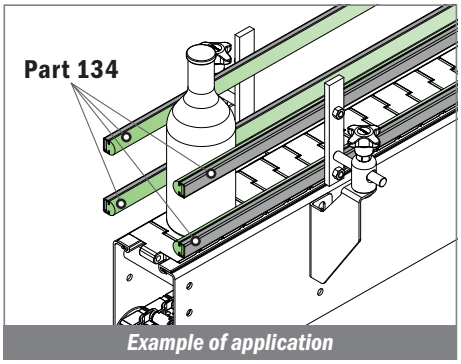

Example of application

Material:
Polyethylene UHMW-PE with molecular density 5,600,000 g/mol
Linear expansion coefficient: $1.1x10^{-4}$ °F^{-1} ($2x10^{-4}$ °C^{-1})
Operating temperature: -40 to 176°F (-40 to +80°C)

1041

Profilo "C" / *C-Profile / C-Profil*

Fit on 5 x 25 mm

North America STANDARD

Part	Article-Nr.	L	Colour	Availability	Supply
1041	104103C	3 m	white	On request	3 m bars
1041	104103	6 m	white	On request	6 m bars

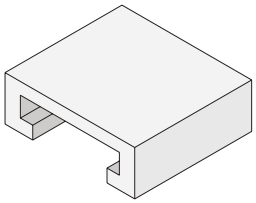

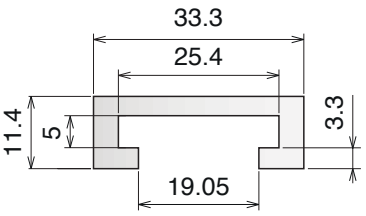

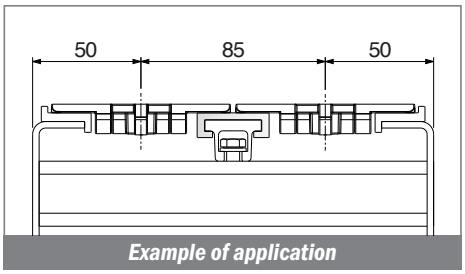

Example of application

1042

Profilo "C" / *C-Profile / C-Profil*

Fit on 6 x 50 mm

North America STANDARD

Part	Article-Nr.	L	Colour	Availability	Supply
1042	104203C	3 m	white	On request	3 m bars
1042	104203	6 m	white	On request	6 m bars

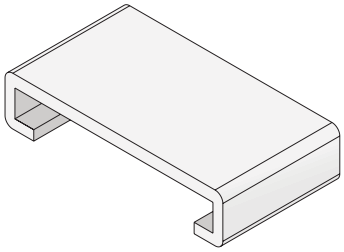

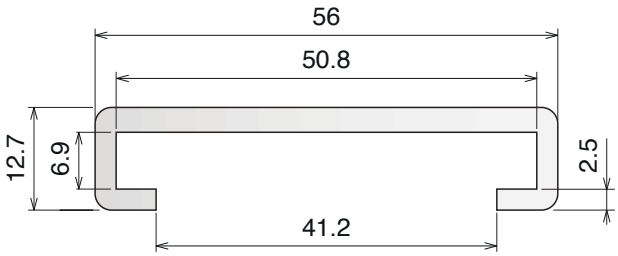

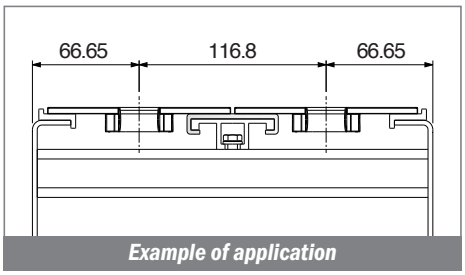

Example of application

1043

Profilo "C" / *C-Profile / C-Profil*

Fit on 6 x 50 mm

North America STANDARD

Part	Article-Nr.	L	Colour	Availability	Supply
1043	104303C	3 m	white	On request	3 m bars
1043	104303	6 m	white	On request	6 m bars

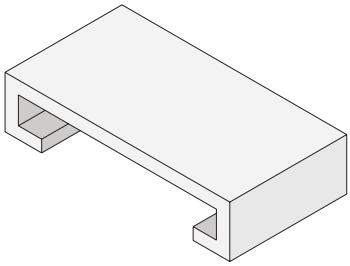

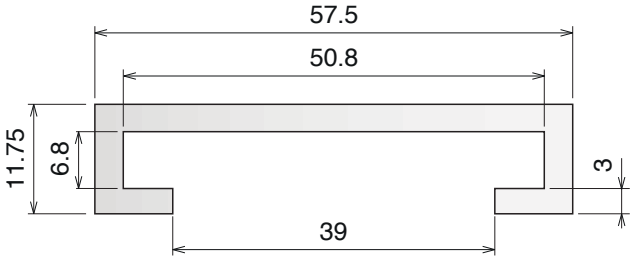

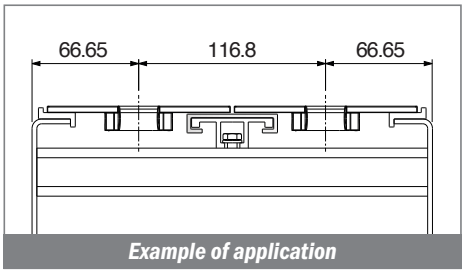

Example of application

1044-1045-1053

Material:
Polyethylene UHMW-PE with molecular density 5,600,000 g/mol
Linear expansion coefficient: 1.1x10^{-4} °F^{-1} (2x10^{-4} °C^{-1})
Operating temperature: -40 to 176°F (-40 to +80°C)

1044

Profilo "C" / *C-Profile / C-Profil*

Fit on 12.7 x 38.1 mm

North America STANDARD

Part	Article-Nr.	L	Colour	Availability	Supply
1044	104403C	3 m	white	On request	3 m bars
1044	104403	6 m	white	On request	6 m bars

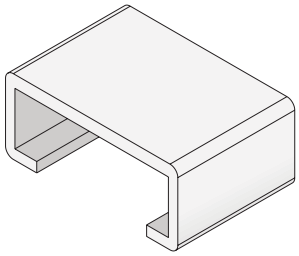

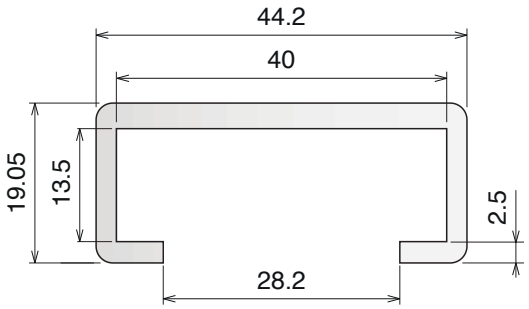

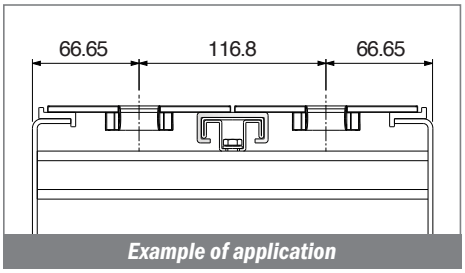

Example of application

1045

Profilo "C" / *C-Profile / C-Profil*

Fit on 12.7 x 50.8 mm

North America STANDARD

Part	Article-Nr.	L	Colour	Availability	Supply
1045	104503C	3 m	white	On request	3 m bars
1045	104503	6 m	white	On request	6 m bars

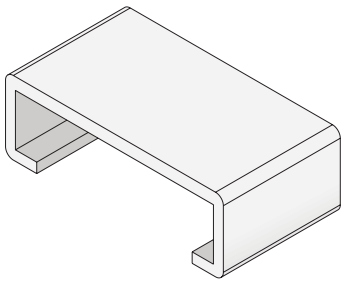

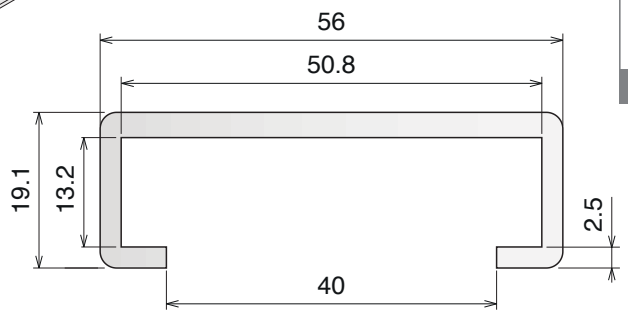

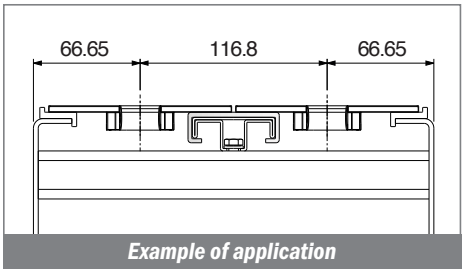

Example of application

1053

Copri profilo / *Bar cover / Abdeckprofil*

Fit on 6.35 x 38.1 mm

North America STANDARD

Part	Article-Nr.	L	Colour	Availability	Supply
1053	105303C	3 m	white	On request	3 m bars
1053	105303	6 m	white	On request	6 m bars

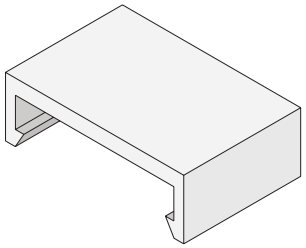

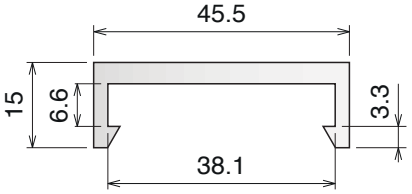

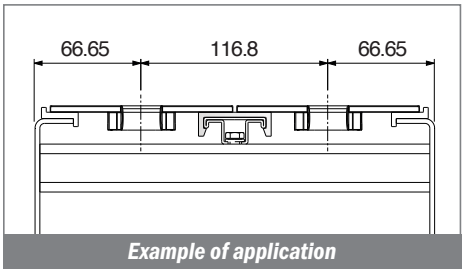

Example of application

Material:
Polyethylene UHMW-PE with molecular density 5,600,000 g/mol
Linear expansion coefficient: $1.1x10^{-4}$ °F^{-1} ($2x10^{-4}$ °C^{-1})
Operating temperature: -40 to 176°F (-40 to +80°C)

1054

Copri profilo / *Bar cover / Abdeckprofil*

Fit on 6.35 x 38.1 mm

North America STANDARD

Part	Article-Nr.	L	Colour	Availability	Supply
1054	105403C	3 m	white	On request	3 m bars
1054	105403	6 m	white	On request	6 m bars

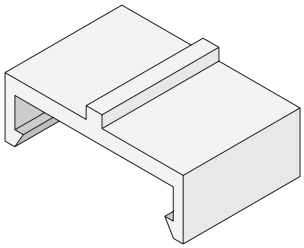

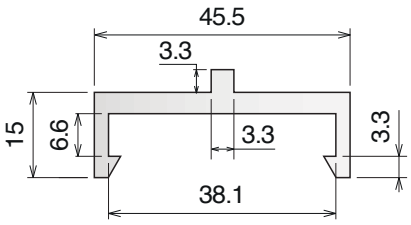

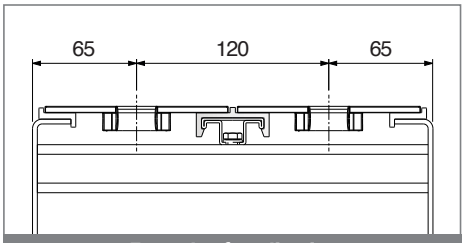

Example of application

137

Profilo "C" / *C-Profile / C-Profil*

Part	Article-Nr.	L	A	B	Colour	Availability	Supply
137	13701C	3 m	8,5	14	green	Stock item	3 m bars
137	13701	6 m	8,5	14	green	On request	6 m bars
137	13701BC	3 m	8,5	14	BluLub	Stock item	3 m bars
137	13701B	6 m	8,5	14	BluLub	On request	6 m bars
137	13702C	3 m	8,5	14	black	Stock item	3 m bars
137	13702	6 m	8,5	14	black	On request	6 m bars
137	13711C	3 m	10,5	16	green	Stock item	3 m bars
137	13711	6 m	10,5	16	green	On request	6 m bars
137	13711BC	3 m	10,5	16	BluLub	Stock item	3 m bars
137	13711B	6 m	10,5	16	BluLub	On request	6 m bars

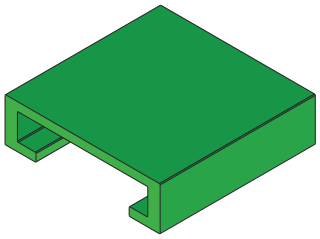

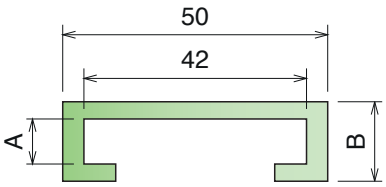

USE WITH STEEL
40 x 8 mm or 40 x 10 mm

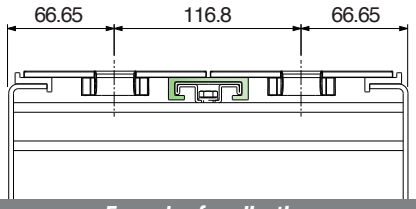

Example of application

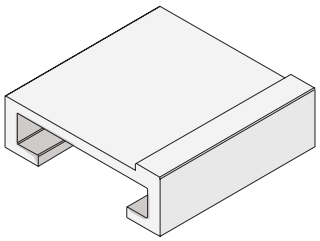

Part	Article-Nr.	L	Colour	Availability	Supply
137	13720	6 m	white	On request	6 m bars

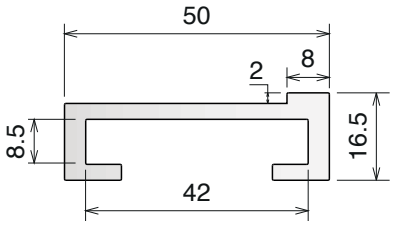

USE WITH STEEL
40 x 8 mm

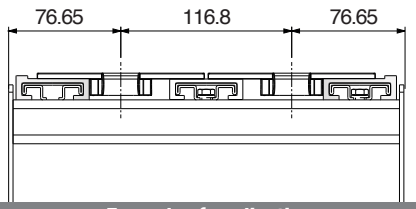

Example of application

Material:
Polyethylene UHMW-PE with molecular density 5,600,000 g/mol
Linear expansion coefficient: $1.1x10^{-4}$ °F^{-1} ($2x10^{-4}$ °C^{-1})
Operating temperature: -40 to 176°F (-40 to +80°C)

117
Profilo Omega / *M-Profile / M-Profil*

Part	Article-Nr.	L	A	Material	Availability	Supply
117	11701C	3 m	8	AISI 304	Stock item	3 m bars
117	11701	6 m	8	AISI 304	On request	6 m bars
117	11702C	3 m	10	AISI 304	Stock item	3 m bars
117	11702	6 m	10	AISI 304	On request	6 m bars
117	11703C	3 m	6	AISI 304	Stock item	3 m bars
117	11703	6 m	6	AISI 304	On request	6 m bars

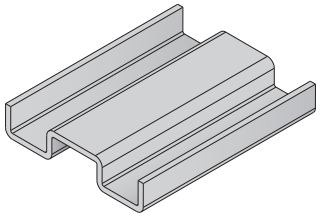

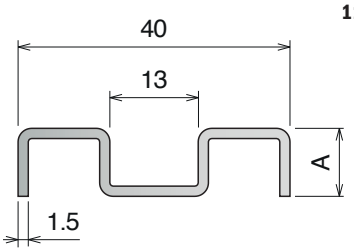

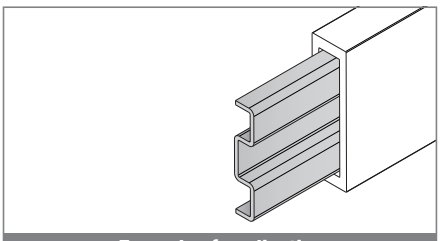
Example of application

1055
Guida in acciaio inox / *Stainless steel guide / Edelstahlprofil*

Part	Article-Nr.	L	Material	Availability	Supply
1055	105501C	3 m	AISI 304	Stock item	3 m bars
1055	105501	6 m	AISI 304	On request	6 m bars

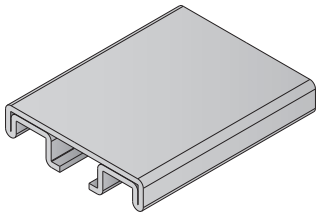

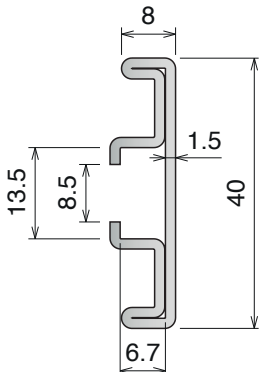

40x8
Used with part:
13701C / 13701BC
18914C / 18914
18301C / 18301

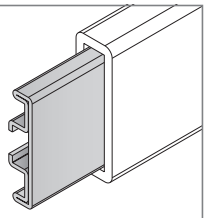
Example of application

159
Guida in alluminio / *Aluminum guide / Aluminiumprofil*

Part	Article-Nr.	L	Material	Availability	Supply
159	15901C	3 m	Aluminium	Stock item	3 m bars
159	15901	6 m	Aluminium	On request	6 m bars

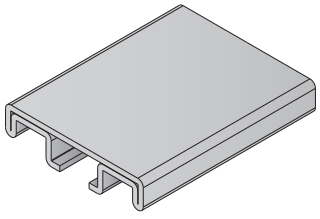

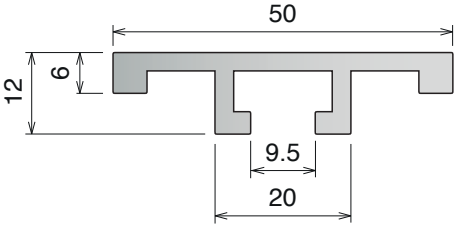

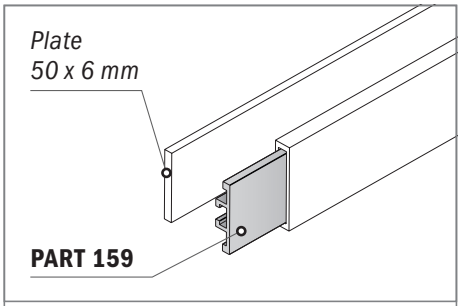


Fixing screw:
M8 hex.head or **PART 362**

Example of application

135

Guida laterale H.78 mm / *Side guide H.78 mm* / *Seitenführung H.78 mm*

For plate: 60 x 6 mm

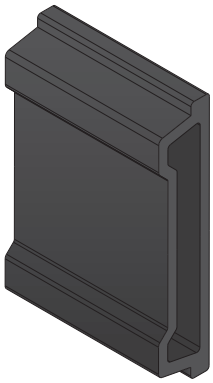

Part	Article-Nr.	L	Colour	Availability	Supply
135	13501C	3 m	black	Stock item	3 m bars
135	13501	6 m	black	On request	6 m bars
135	13502C	3 m	blu	Stock item	3 m bars
135	13502	6 m	blu	On request	6 m bars

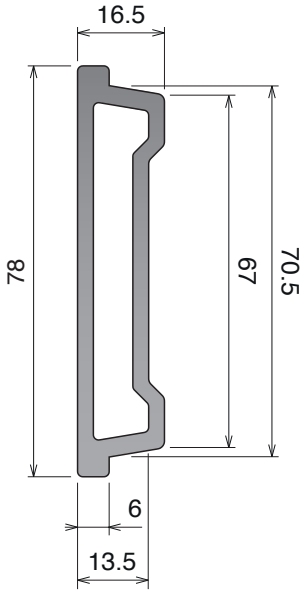

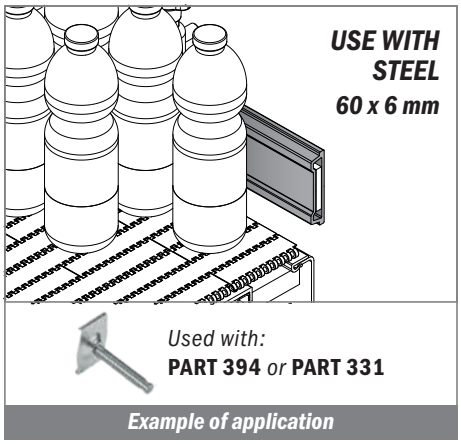

Used with:
PART 394 *or* **PART 331**

Example of application

136

Guida laterale H.87 mm / *Side guide H.87 mm* / *Seitenführung H.87 mm*

For plate: 60 x 6 mm

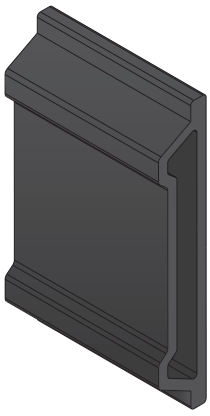

Part	Article-Nr.	L	Colour	Availability	Supply
136	13601C	3 m	black	Stock item	3 m bars
136	13601	6 m	black	On request	6 m bars
136	13602C	3 m	blu	Stock item	3 m bars
136	13602	6 m	blu	On request	6 m bars

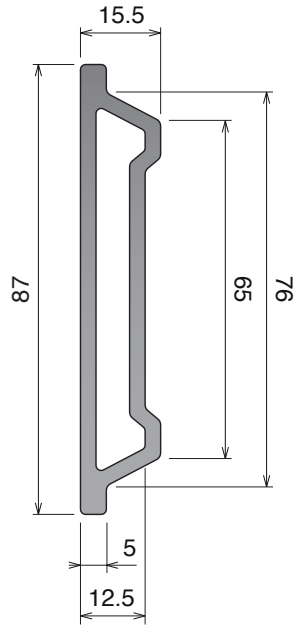

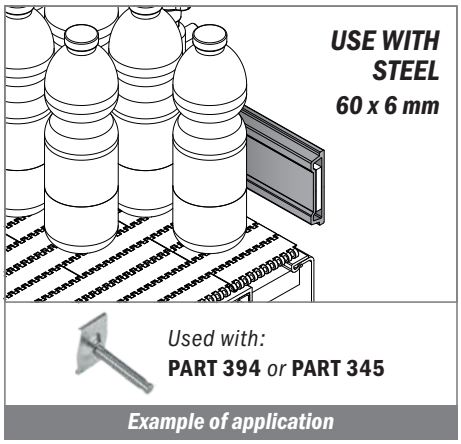

Used with:
PART 394 *or* **PART 345**

Example of application

Material:
Polyethylene UHMW-PE with molecular density 5,600,000 g/mol
Linear expansion coefficient: $1.1x10^{-4}$ °F^{-1} ($2x10^{-4}$ °C^{-1})
Operating temperature: -40 to 176°F (-40 to +80°C)

1063

Guida laterale / *Side guide rail / Seitenführung*

For plate: 30 x 4 mm

Part	Article-Nr.	L	Colour	Availability	Supply
1063	106301C	3 m	black	Stock item	3 m bars
1063	106302C	3 m	green	Stock item	3 m bars

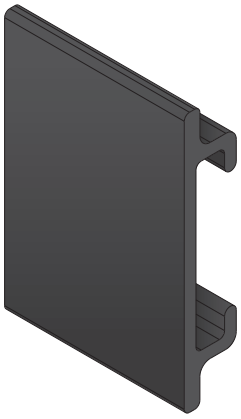

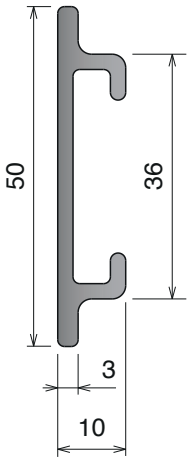

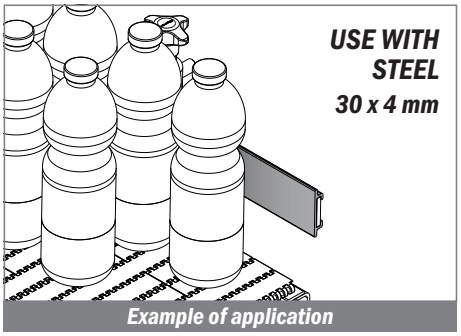

1064

Guida laterale / *Side guide rail / Seitenführung*

For plate: 55 x 4 mm

Part	Article-Nr.	L	Colour	Availability	Supply
1064	106401C	3 m	black	Stock item	3 m bars

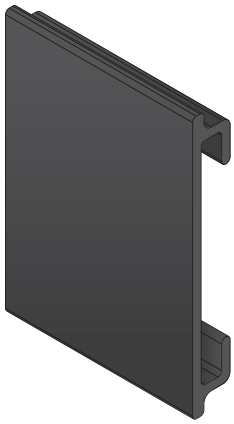

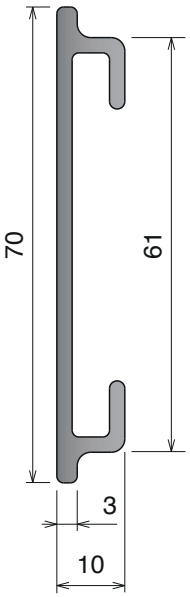

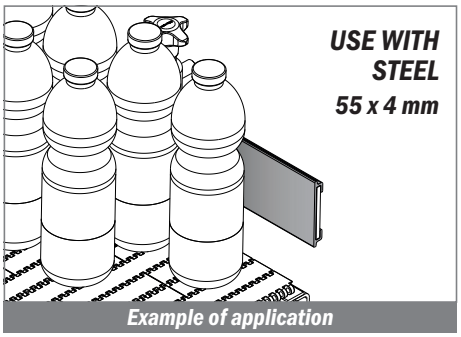

Material: Polyethylene UHMW-PE with molecular density 9,200,000 g/mo. ***BluLub®*** *new material with reduced coefficient of friction and higher wear resistence. BluLub complies with the code of Federal Regulations of FDA. Linear expansion coefficient: 1.1x10⁻⁴ °F⁻¹ (2x10⁻⁴ °C⁻¹) Operating temperature: -40 to 176 °F (-40 to +80 °C)*

158 Guida laterale / *Side guide rail / Seitenführung*

Part	Article-Nr.	L	Material	Availability	Supply
158	15800C	3 m	grey	Stock item	3 m bars
158	15800BC	3 m	BluLub	Stock item	3 m bars

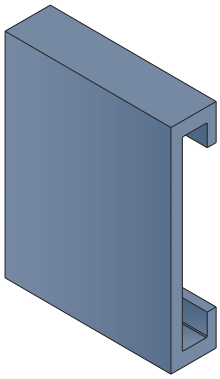

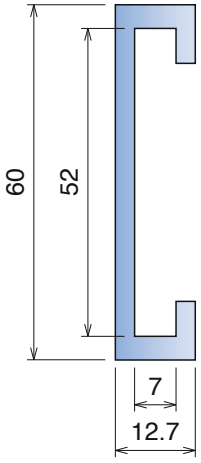

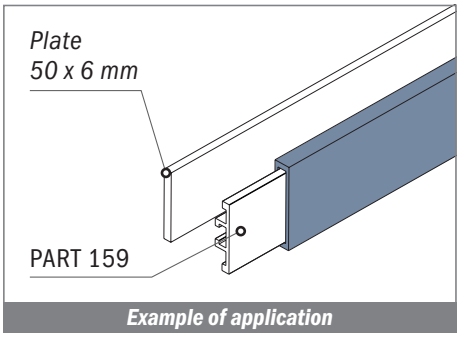

Example of application

Guida laterale / *Side guide rail / Seitenführung*

Part	Article-Nr.	L	A	Material	Availability	Supply	Design
158	15801C	3 m	90	grey	On request	3 m bars	A
158	15801BC	3 m	90	BluLub	Stock item	3 m bars	A
158	15802C	3 m	100	grey	On request	3 m bars	A
158	15802BC	3 m	100	BluLub	Stock item	3 m bars	A
158	15803C	3 m	120	grey	On request	3 m bars	B
158	15803BC	3 m	120	BluLub	Stock item	3 m bars	B

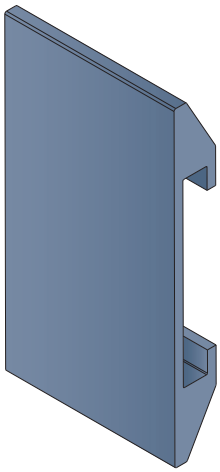

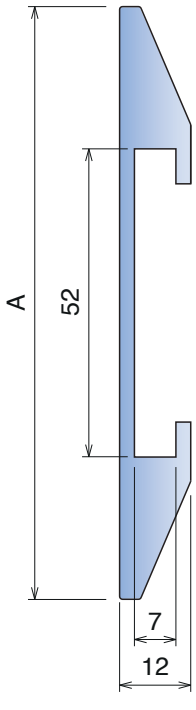

DESIGN **A**

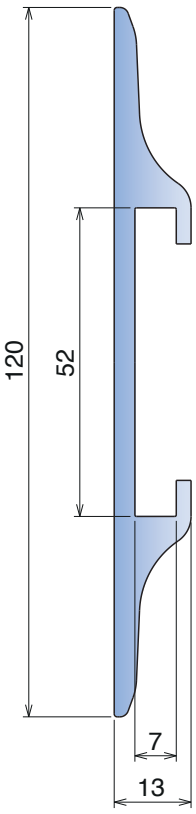

DESIGN **B**

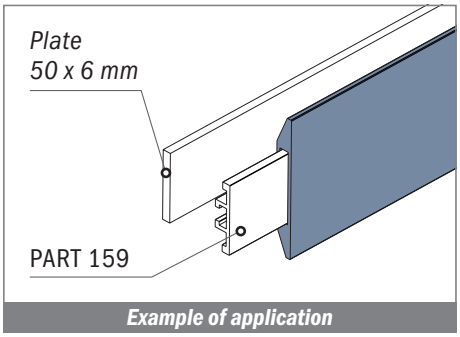

Example of application

Material: Polyethylene UHMW-PE with molecular density 9,200,000 g/mo. **BluLub®** *new material with reduced coefficient of friction and higher wear resistence. BluLub complies with the code of Federal Regulations of FDA. Linear expansion coefficient: 1.1x10⁻⁴ °F⁻¹ (2x10⁻⁴ °C⁻¹) Operating temperature: -40 to 176°F (-40 to +80°C)*

182

Guida laterale / *Side guide rail / Seitenführung*

Part	Article-Nr.	L	For plate	Material	Availability	Supply
182	18214C	3 m	40 x 8 mm	grey	On request	3 m bars
182	18210BC	3 m	40 x 8 mm	BluLub	On request	3 m bars
182	18204C	3 m	50 x 6 mm	grey	Stock item	3 m bars
182	18200BC	3 m	50 x 6 mm	BluLub	Stock item	3 m bars

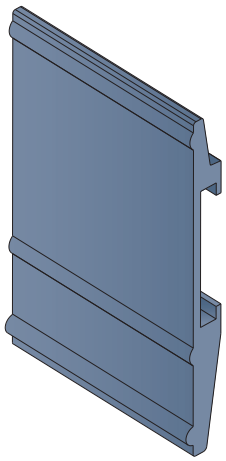

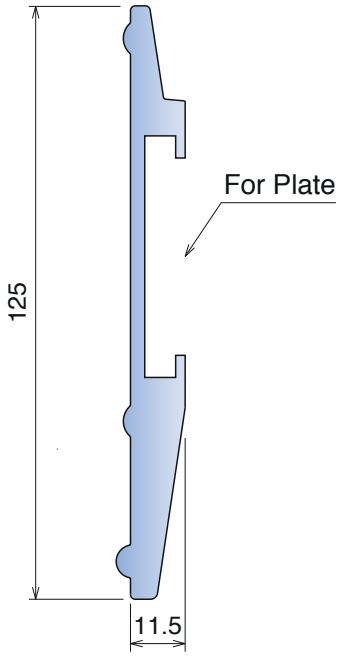

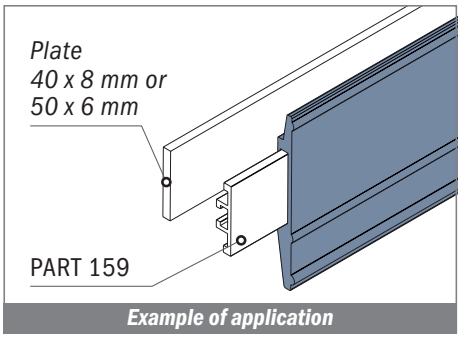

Example of application

1065

Guida laterale / *Side guide rail / Seitenführung*

For plate: 50 x 6 mm

Part	Article-Nr.	L	Material	Availability	Supply
1065	106504C	3 m	grey	On request	3 m bars
1065	106500BC	3 m	BluLub	On request	3 m bars

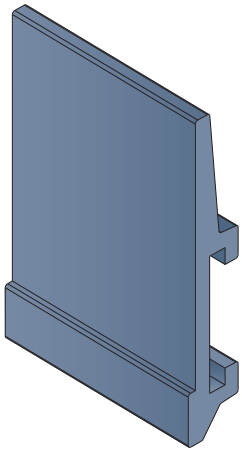

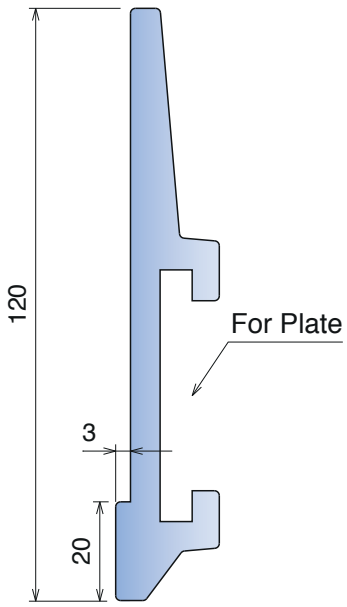

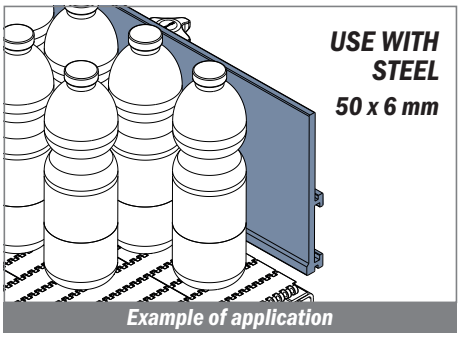

Example of application



Material: Polyethylene UHMW-PE with molecular density 9,200,000 g/mo. ***BluLub®*** *new material with reduced coefficient of friction and higher wear resistence. BluLub complies with the code of Federal Regulations of FDA. Linear expansion coefficient: 1.1x10⁻⁴ °F⁻¹ (2x10⁻⁴ °C⁻¹) Operating temperature: -40 to 176 °F (-40 to +80 °C)*

189

Guida laterale / *Side guide rail / Seitenführung*

Part	Article-Nr.	L	For plate	Material	Availability	Supply
189	18904C	3 m	50 x 6 mm	grey	On request	3 m bars
189	18900BC	3 m	50 x 6 mm	BluLub	Stock item	3 m bars
189	18914C	3 m	40 x 8 mm	grey	On request	3 m bars
189	18910BC	3 m	40 x 8 mm	BluLub	Stock item	3 m bars

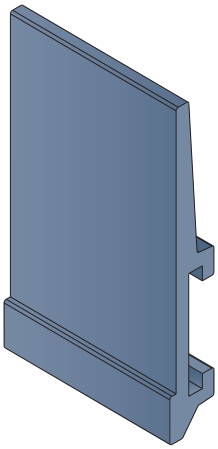

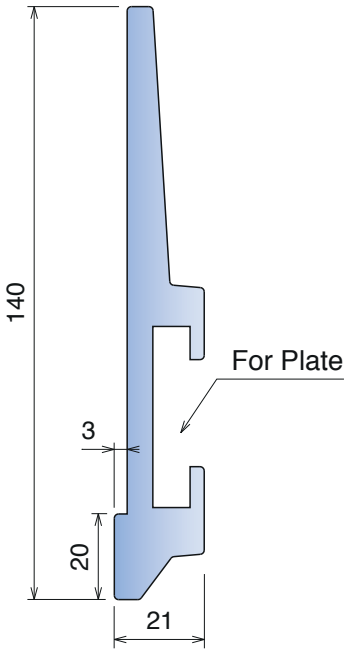

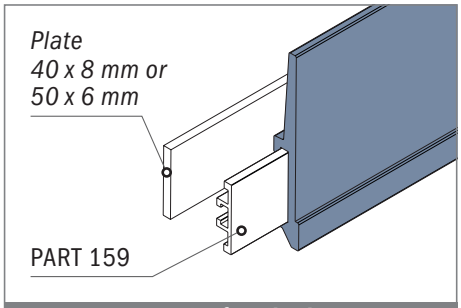

Example of application

Guida laterale / *Side guide rail / Seitenführung*

Part	Article-Nr.	L	A	For plate	Material	Availability	Supply
189	18944C	3 m	40	60 x 5 mm	grey	Stock item	3 m bars
189	18940BC	3 m	40	60 x 5 mm	BluLub	Stock item	3 m bars
189	18924C	3 m	20	60 x 6 mm	grey	Stock item	3 m bars
189	18920BC	3 m	20	60 x 6 mm	BluLub	Stock item	3 m bars
189	18934C	3 m	40	60 x 6 mm	grey	Stock item	3 m bars
189	18930BC	3 m	40	60 x 6 mm	BluLub	Stock item	3 m bars

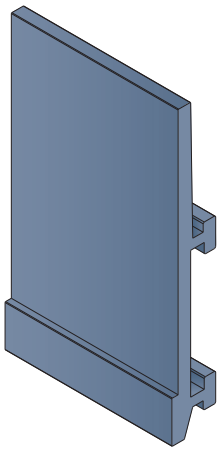

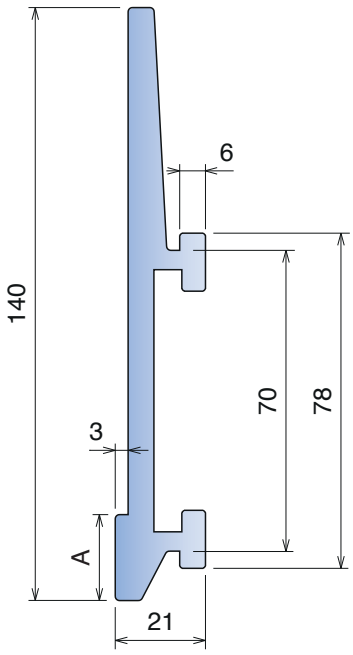

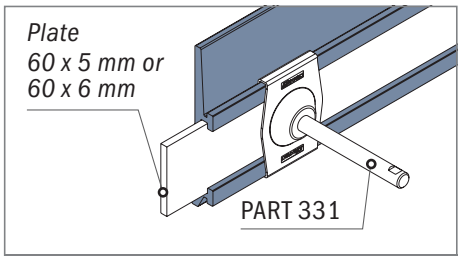

Example of application

Material: Polyethylene UHMW-PE with molecular density 9,200,000 g/mo.
BluLub® *new material with reduced coefficient of friction and higher wear resistence.*
BluLub complies with the code of Federal Regulations of FDA. Linear expansion coefficient: 1.1x10⁻⁴ °F⁻¹ (2x10⁻⁴ °C⁻¹) Operating temperature: -40 to 176°F (-40 to +80°C)

193 Guida laterale / *Side guide rail / Seitenführung*

For plate: 60 x 6 mm

Part	Article-Nr.	L	Material	Availability	Supply
193	19324C	3 m	grey	Stock item	3 m bars
193	19320BC	3 m	BluLub	Stock item	3 m bars

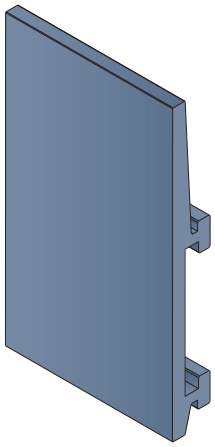

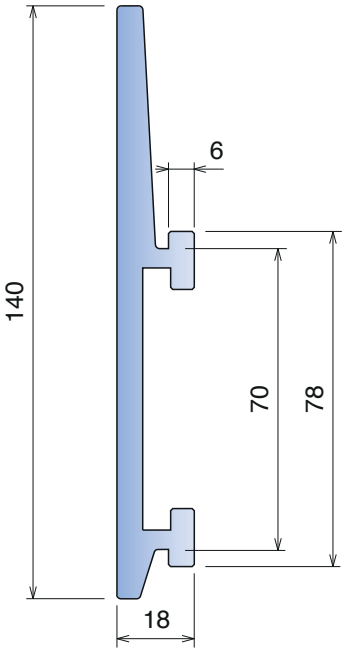

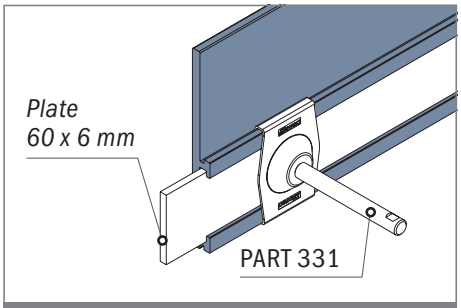

Example of application

187 Guida laterale / *Side guide rail / Seitenführung*

For plate: 60 x 6 mm

Part	Article-Nr.	L	A	Material	Availability	Supply
187	18724C	3 m	12	grey	Stock item	3 m bars
187	18720BC	3 m	12	BluLub	Stock item	3 m bars
187	18734C	3 m	20	grey	Stock item	3 m bars
187	18730BC	3 m	20	BluLub	Stock item	3 m bars
187	18744C	3 m	40	grey	Stock item	3 m bars
187	18740BC	3 m	40	BluLub	Stock item	3 m bars

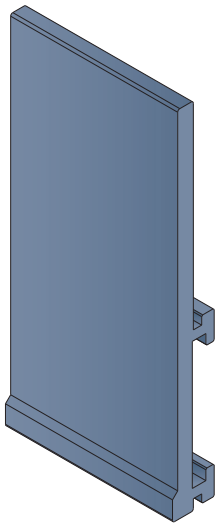

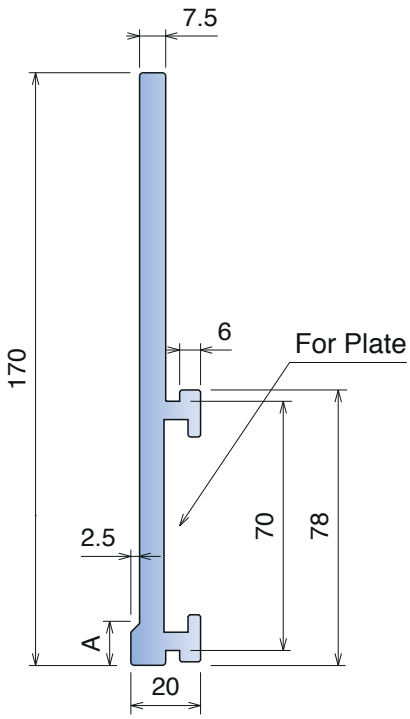

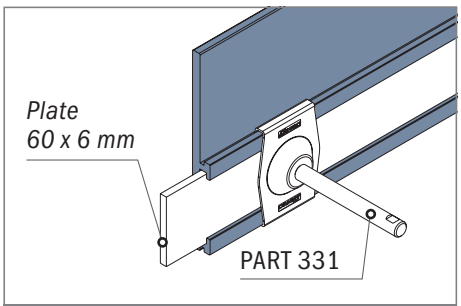

Example of application

Material: Polyethylene UHMW-PE with molecular density 9,200,000 g/mo. ***BluLub®*** *new material with reduced coefficient of friction and higher wear resistence. BluLub complies with the code of Federal Regulations of FDA. Linear expansion coefficient: 1.1x10⁻⁴ °F⁻¹ (2x10⁻⁴ °C⁻¹) Operating temperature: -40 to 176 °F (-40 to +80 °C)*

1056

Guida laterale / *Side guide rail / Seitenführung*

For plate: 60 x 6 mm

Part	Article-Nr.	L	A	Material	Availability	Supply
1056	105604C	3 m	10	grey	Stock item	3 m bars
1056	105600BC	3 m	10	BluLub	Stock item	3 m bars
1056	105634C	3 m	40	grey	Stock item	3 m bars
1056	105630BC	3 m	40	BluLub	Stock item	3 m bars

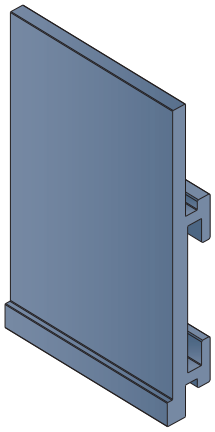

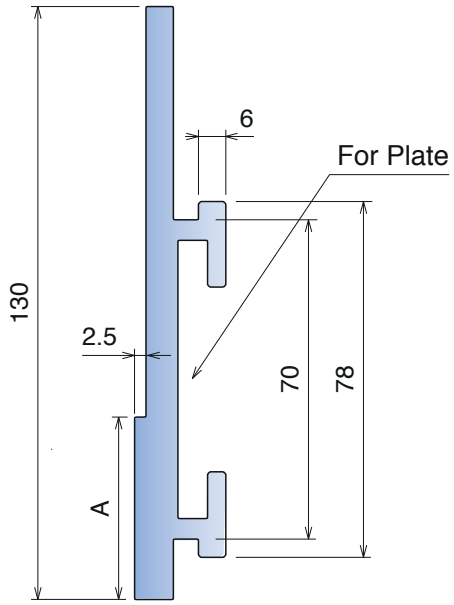

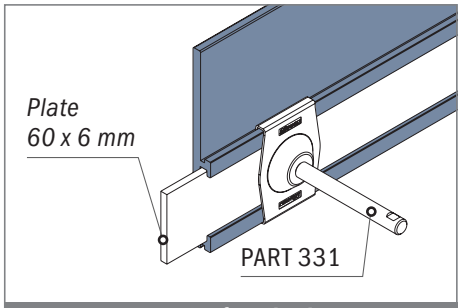

Example of application

1057

Guida laterale / *Side guide rail / Seitenführung*

For plate: 60 x 6 mm

Part	Article-Nr.	L	Material	Availability	Supply
1057	105704C	3 m	grey	Stock item	3 m bars
1057	105700BC	3 m	BluLub	Stock item	3 m bars

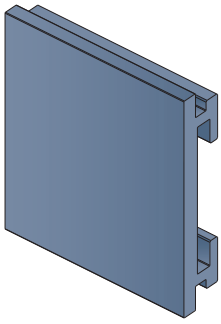

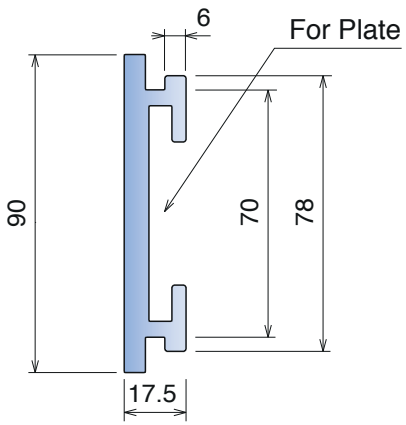

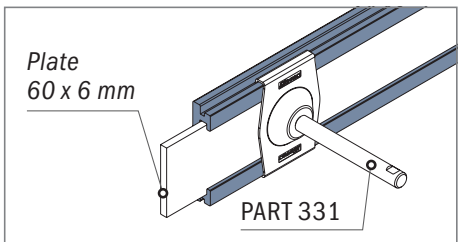

Example of application

Material: Polyethylene UHMW-PE with molecular density 9,200,000 g/mo.
BluLub® *new material with reduced coefficient of friction and higher wear resistence. BluLub complies with the code of Federal Regulations of FDA. Linear expansion coefficient: 1.1x10⁻⁴ °F⁻¹ (2x10⁻⁴ °C⁻¹) Operating temperature: -40 to 176 °F (-40 to +80 °C)*

186 Guida laterale / *Side guide rail / Seitenführung*

For plate: 50 x 6 mm

Part	Article-Nr.	L	Material	Availability	Supply
186	18604C	3 m	grey	On request	3 m bars
186	18600BC	3 m	BluLub	On request	3 m bars

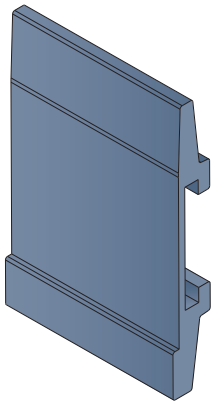

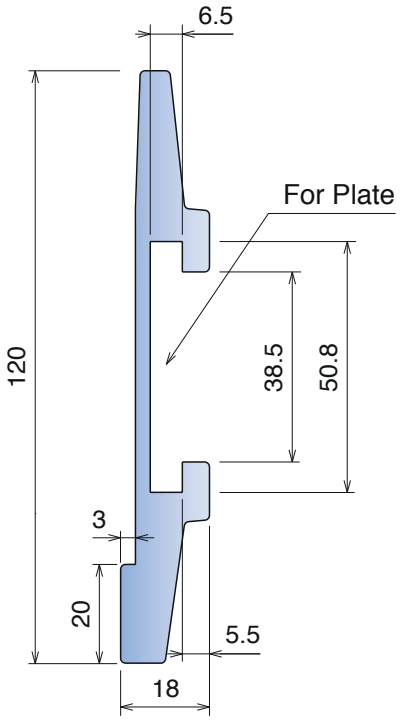

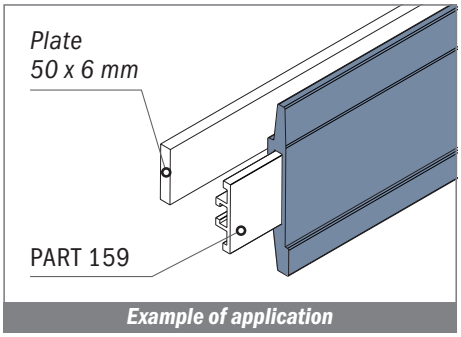

Example of application

1061 Guida laterale / *Side guide rail / Seitenführung*

For plate: 60 x 6 mm

Part	Article-Nr.	L	Material	Availability	Supply
1061	106104C	3 m	grey	On request	3 m bars
1061	106104BC	3 m	BluLub	On request	3 m bars

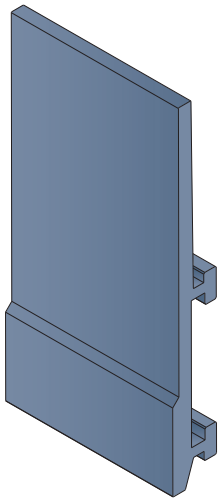

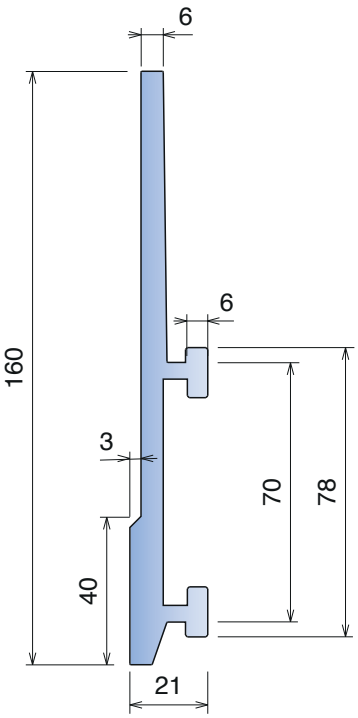

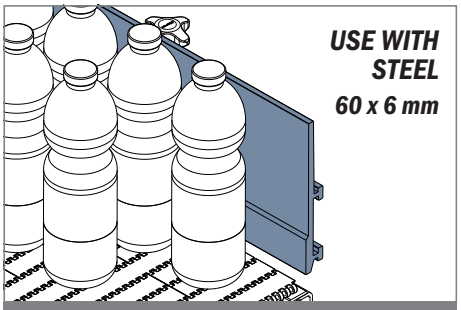

Example of application

Material: Polyethylene UHMW-PE with molecular density 9,200,000 g/mo. **BluLub®** *new material with reduced coefficient of friction and higher wear resistence. BluLub complies with the code of Federal Regulations of FDA. Linear expansion coefficient: 1.1x10⁻⁴ °F⁻¹ (2x10⁻⁴ °C⁻¹) Operating temperature: -40 to 176°F (-40 to +80°C)*

183

Guida laterale / *Side guide rail / Seitenführung*

For plate: 40 x 8 mm

Part	Article-Nr.	L	Colour	Availability	Supply
183	18301C	3 m	black	Stock item	3 m bars
183	18301BC	3 m	BluLub	Stock item	3 m bars

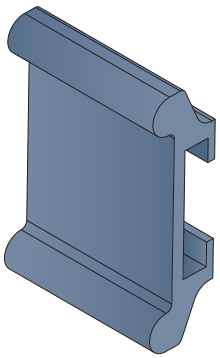

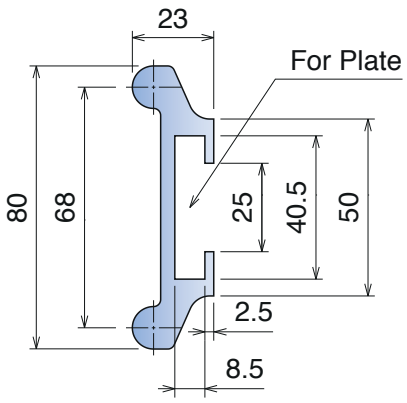

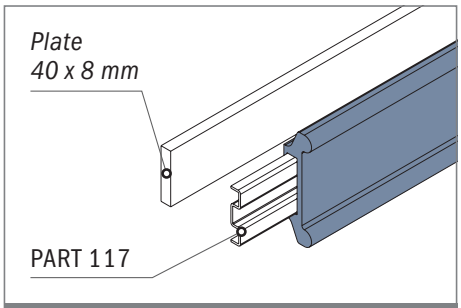

Example of application

166

Profilo per tondini / *Round profile for steel rods / Clip-on Profil für Rundmaterial*

Part	Article-Nr.	A	B	C	Colour	Availability	Supply
166	16601	8	12	0,5	white	Stock item	30 m coils
166	16602	10	14	0,5	white	Stock item	30 m coils
166	16603	12	16	1	white	Stock item	30 m coils
166	16604	16	20	1,5	white	Stock item	30 m coils

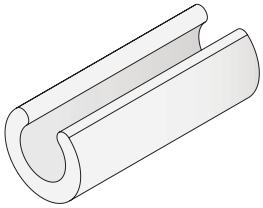

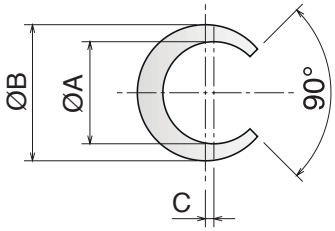

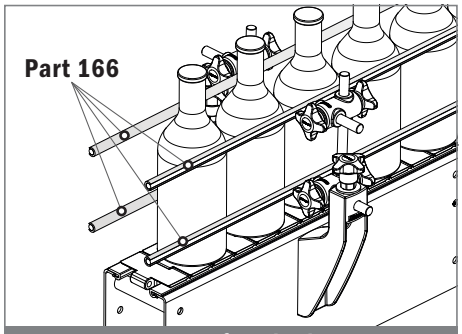

Example of application

1039

Profilo per mezzitondi / *Half round profile for steel rods / Halbmond Profil*

Part	Article-Nr.	L	A	B	Colour	Availability	Supply
1039	103923C	3 m	16	20	white	Stock item	3 m bars
1039	103923	6 m	16	20	white	On request	6 m bars
1039	103923-30	30 m	16	20	white	On request	30 m coils
1039	103923-60	60 m	16	20	white	On request	60 m coils

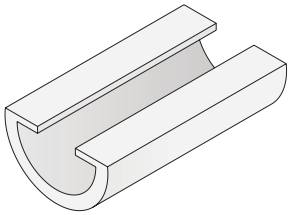

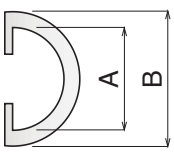

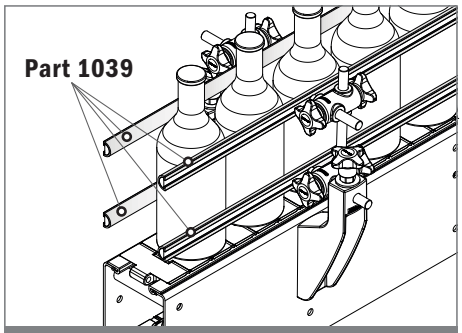

Example of application

Materiale / *Material / Materialien:*
Poliammide rinforzato / *Polyamide reinforced / Verstärktes Polyamid*

113 Pattino guida catena, centrale / *Central wear strip shoe / Zentraler Einlaufschuh*

Used with SS Profile: **PART 112** pag.304

Part	Article-Nr.	Colour	Availability
113	11301	black	On request



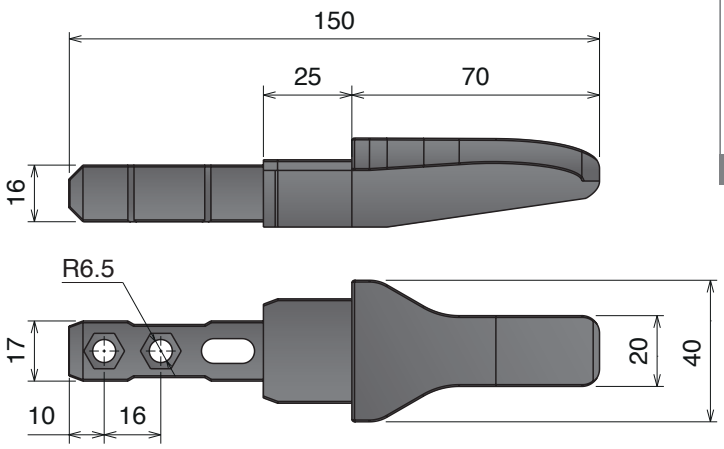

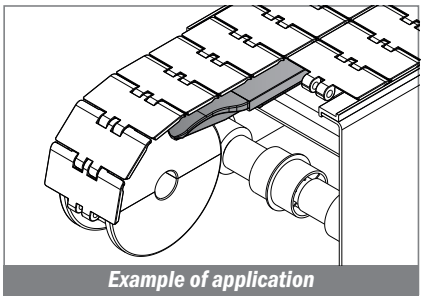
Example of application

CON NERVATURA / WITH NOSE / MIT NASE

Part	Article-Nr.	Colour	Availability
113	11302	black	On request



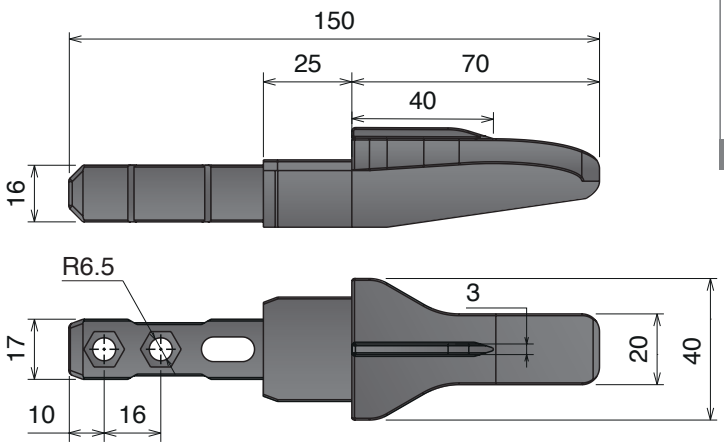

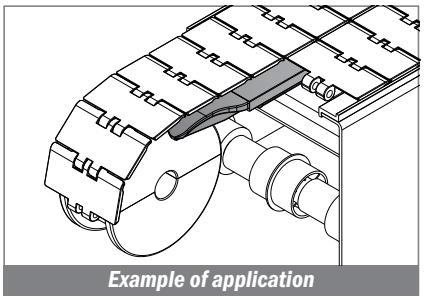
Example of application

114 Blocchetto fissaggio / *Fixing clamp / Fixierblock*

Used with SS Profile: **PART 112** pag.304

Part	Article-Nr.	A	B	C	Colour	Availability
114	11401	10	6,2	4,5	black	On request
114	11402	13	8,2	6	black	On request



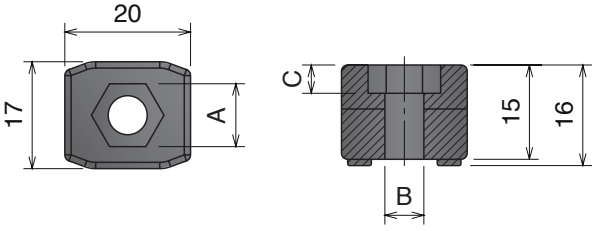

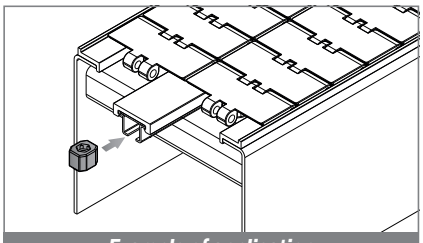
Example of application

116 Pattino guida catena, laterale / *Side transfer guide shoe / Seitlicher Tranferschuh*

Used with SS Profile: **PART 112** pag.304

Part	Article-Nr.	Colour	Availability
116	11601	black	On request

LEFT VERSION

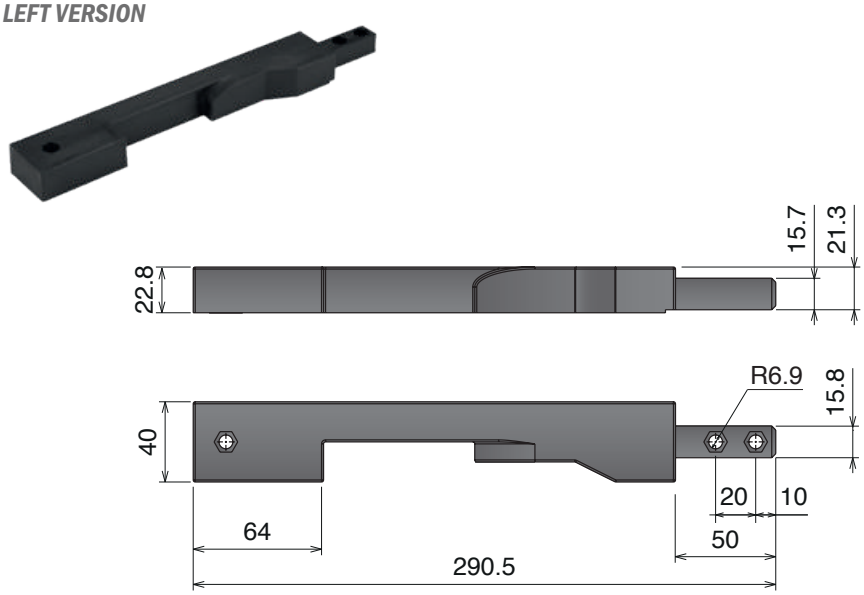

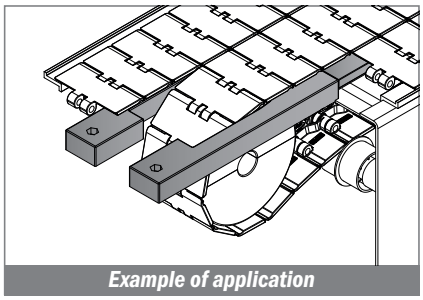
Example of application

RIGHT VERSION

Part	Article-Nr.	Colour	Availability
116	11602	black	On request

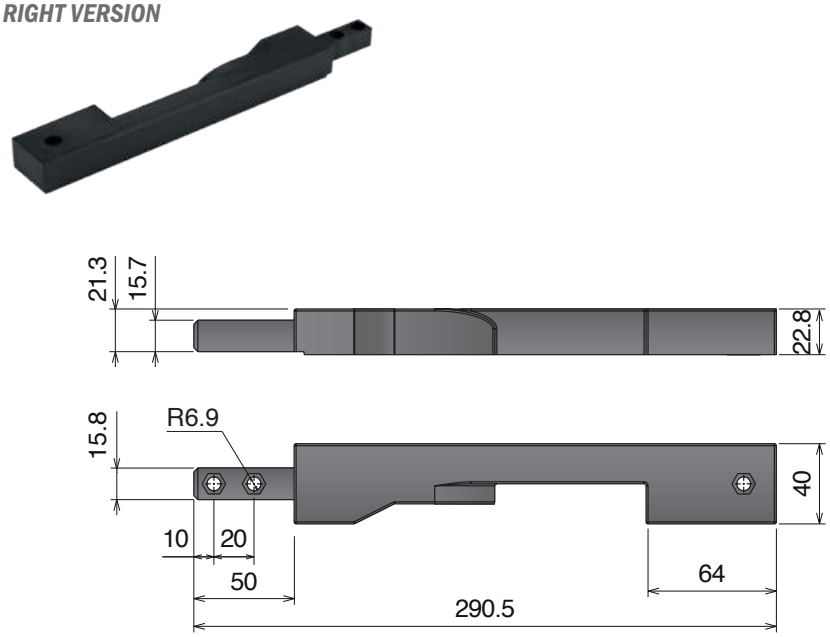

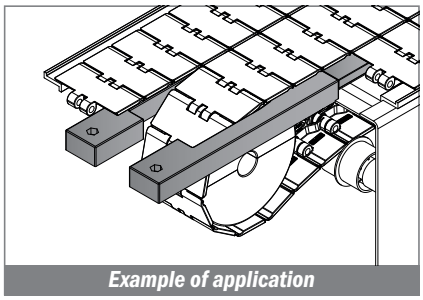
Example of application

115 Blocchetto giunzione / *Connecting element / Verbindungselement*

Used with SS Profile: **PART 112** pag.304

Part	Article-Nr.	A	B	C	Colour	Availability
115	11501	10	6,2	4,5	black	On request
115	11502	13	8,2	6	black	On request



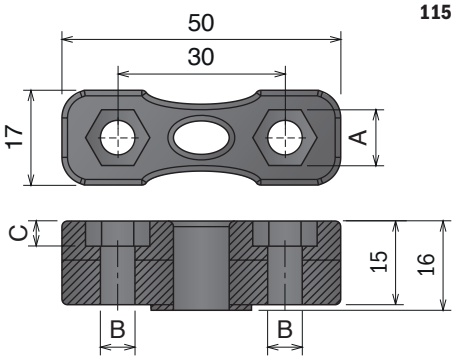

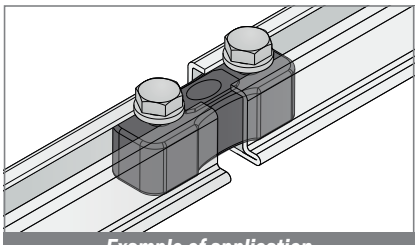
Example of application







347

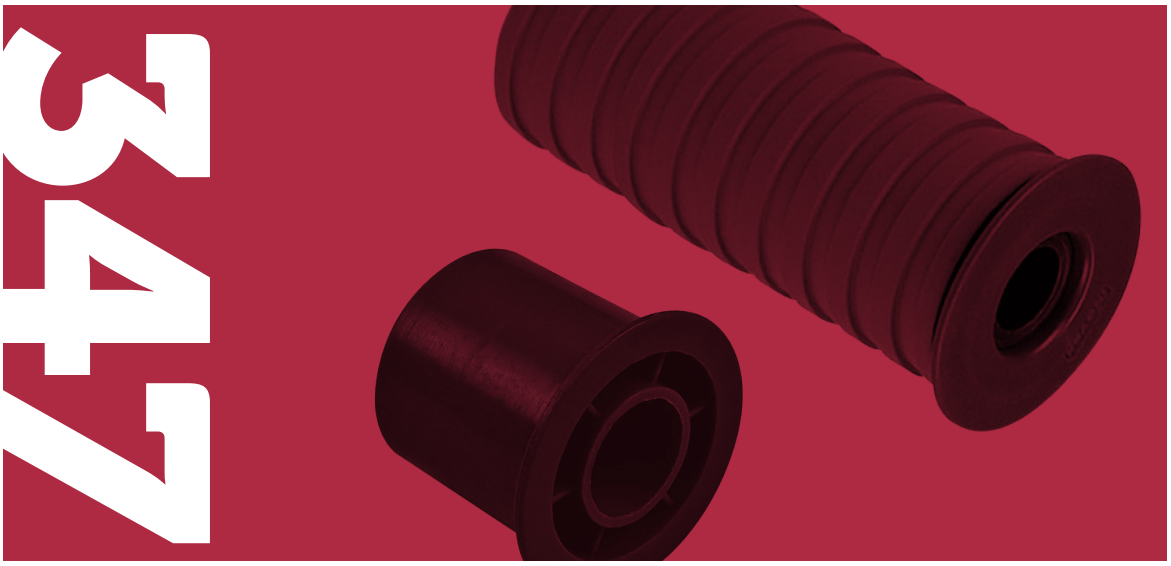

219 - Ø40  Pag 348

220 - Ø47  Pag 348

201 - Ø50  Pag 349

203 - Ø57  Pag 349

202 - Ø60  Pag 350

204 - Ø67  Pag 350

222 - Ø40  Pag 351

223 - Ø47  Pag 351

224 - Ø50  Pag 352

225 - Ø57  Pag 352

226 - Ø60  Pag 353

227 - Ø67  Pag 353

208  Pag 354

209  Pag 354

232  Pag 355

210  Pag 355

211  Pag 355

207  Pag 356

233  Pag 356

213  Pag 356

221  Pag 357

215  Pag 357

217  Pag 357

230  Pag 358

231  Pag 358

Materiale / *Material* / *Materialien:*
Rullino: Polietilene (PE) / *Polyethylene (PE)* / *Polyäthylen (PE)*
Gomma: TPR Rubber: TPR Gummi: TPR

219 Rullini di ritorno D=40 mm
Return roller D=40 mm / Rückführrolle D=40 mm

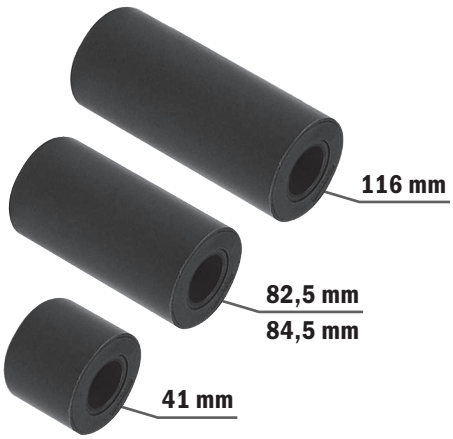

Part	Article-Nr.	L	ØA
219	21951	41	16
219	21952	41	18
219	21953	41	20
219	21901	82,5	16
219	21902	82,5	18
219	21903	82,5	20
219	21911	84,5	16
219	21912	84,5	18
219	21913	84,5	20
219	21964	116	12
219	21961	116	16
219	21962	116	18
219	21963	116	20

Tenuta stagna
Watertight
Wasserdicht

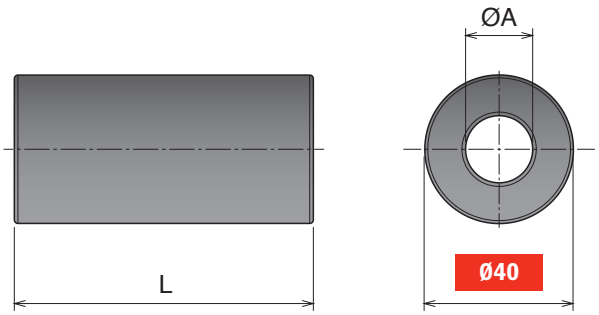

220 Rullini di ritorno gommati D=47 mm
Return roller with rubber D=47 mm / Rückführrolle gummiert D=47 mm

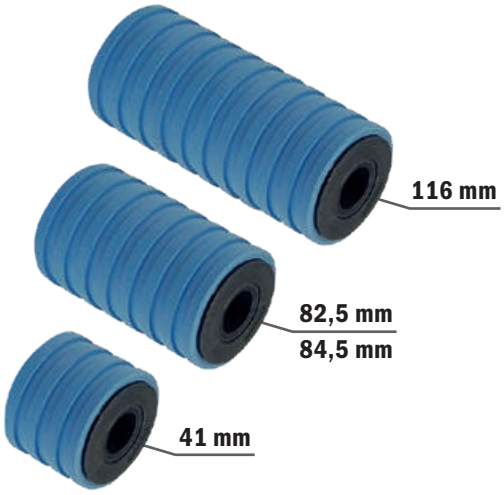

Part	Article-Nr.	L	ØA
220	22051	41	16
220	22052	41	18
220	22053	41	20
220	22001	82,5	16
220	22002	82,5	18
220	22003	82,5	20
220	22011	84,5	16
220	22012	84,5	18
220	22013	84,5	20
220	22064	116	12
220	22061	116	16
220	22062	116	18
220	22063	116	20

Tenuta stagna
Watertight
Wasserdicht

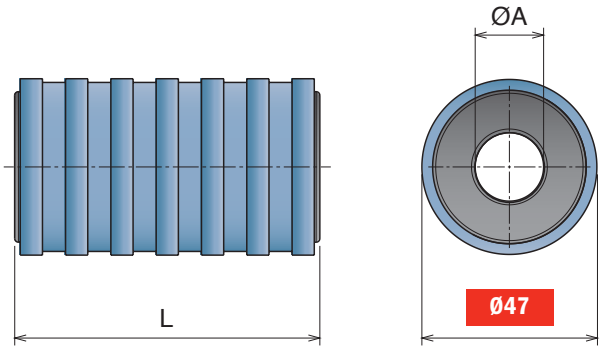

201 Rullini di ritorno D=50 mm
Return roller D=50 mm / Rückführrolle D=50 mm



Part	Article-Nr.	L	ØA
201	20151	41	16
201	20152	41	18
201	20153	41	20
201	20101	82,5	16
201	20102	82,5	18
201	20103	82,5	20
201	20111	84,5	16
201	20112	84,5	18
201	20113	84,5	20
201	20164	116	12
201	20161	116	16
201	20162	116	18
201	20163	116	20

Tenuta stagna
Watertight
Wasserdicht

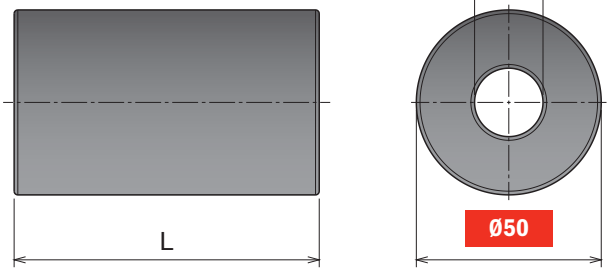

203 Rullini di ritorno gommati D=57 mm
Return roller with rubber D=57 mm / Rückführrolle gummiert D=57 mm

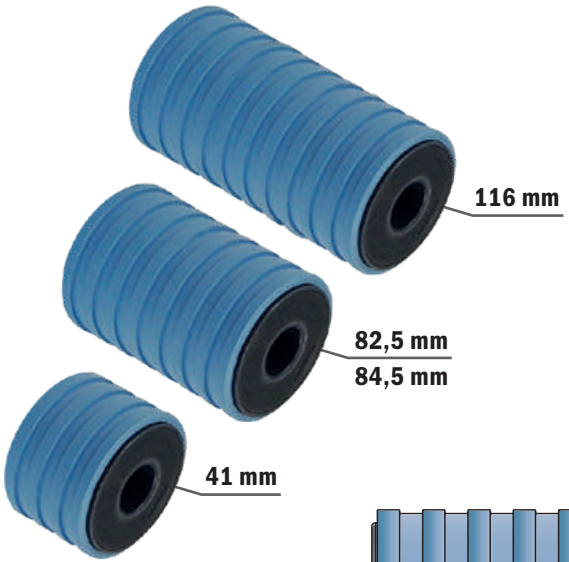

Part	Article-Nr.	L	ØA
203	20351	41	16
203	20352	41	18
203	20353	41	20
203	20301	82,5	16
203	20302	82,5	18
203	20303	82,5	20
203	20311	84,5	16
203	20312	84,5	18
203	20313	84,5	20
203	20364	116	12
203	20361	116	16
203	20362	116	18
203	20363	116	20

Tenuta stagna
Watertight
Wasserdicht

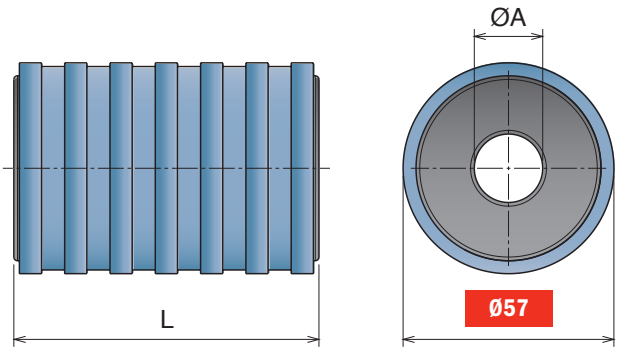

Materiale / *Material* / *Materialien:*
Rullino: Polietilene (PE) / *Polyethylene (PE)* / *Polyäthylen (PE)*
Gomma: TPR Rubber: TPR Gummi: TPR

202 Rullini di ritorno D=60 mm
Return roller D=60 mm / Rückführrolle D=60 mm

Part	Article-Nr.	L	ØA
202	20251	41	16
202	20252	41	18
202	20253	41	20
202	20201	82,5	16
202	20202	82,5	18
202	20203	82,5	20
202	20264	116	12
202	20261	116	16
202	20262	116	18
202	20263	116	20

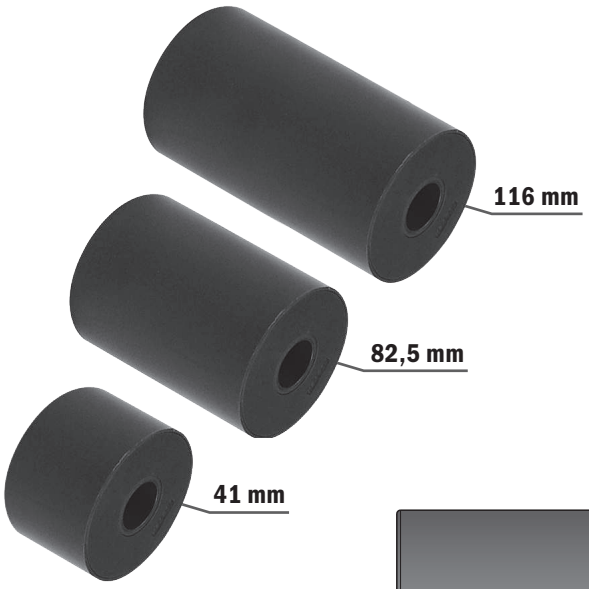

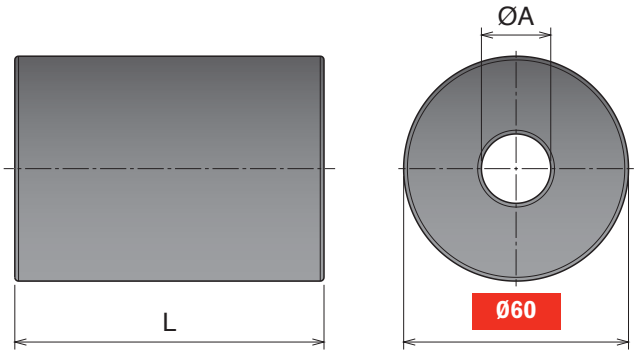

Tenuta stagna
Watertight
Wasserdicht

204 Rullini di ritorno gommati D=67 mm
Return roller with rubber D=67 mm / Rückführrolle gummiert D=67 mm

Part	Article-Nr.	L	ØA
204	20451	41	16
204	20452	41	18
204	20453	41	20
204	20401	82,5	16
204	20402	82,5	18
204	20403	82,5	20
204	20464	116	12
204	20461	116	16
204	20462	116	18
204	20463	116	20

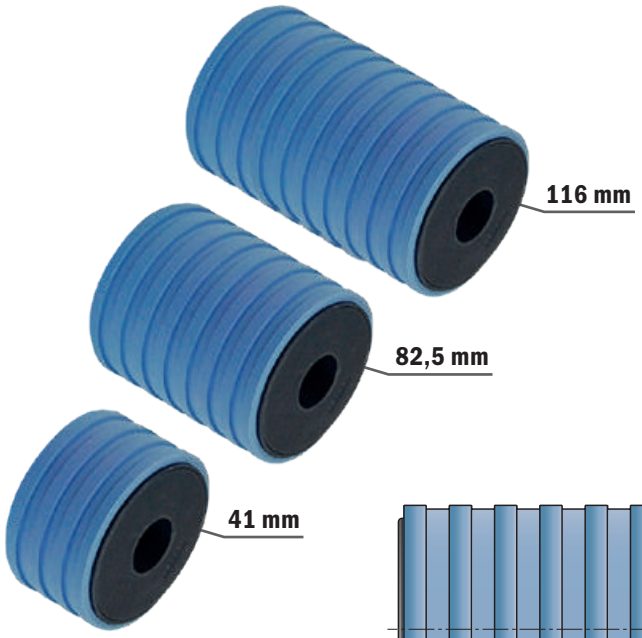

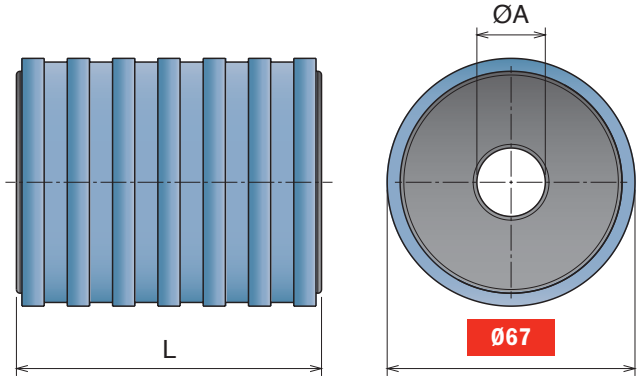

Tenuta stagna
Watertight
Wasserdicht

222 Rullini di ritorno flangiati D=40 mm

Return roller with flange D=40 mm / Rückführrolle mit Seitenscheibe D=40 mm



Part	Article-Nr.	L	ØA
222	22251	43	16
222	22252	43	18
222	22253	43	20
222	22201	85,5	16
222	22202	85,5	18
222	22203	85,5	20
222	22211	87,5	16
222	22212	87,5	18
222	22213	87,5	20
222	22264	119	12
222	22261	119	16
222	22262	119	18
222	22263	119	20

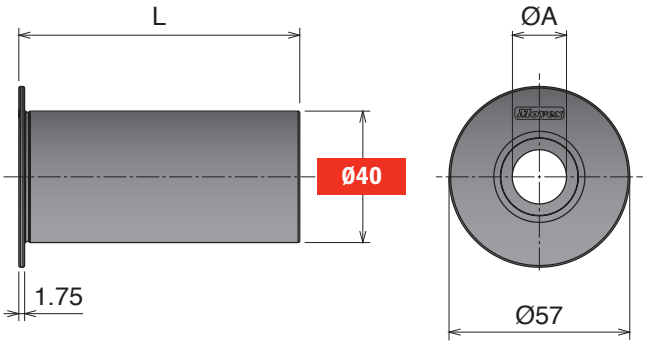

Tenuta stagna
Watertight
Wasserdicht

223 Rullini di ritorno flangiati gommati D=47 mm

***Return roller with flange and rubber D=47 mm / Rückführrolle gummiert mit Seitenscheibe* D=47 mm**

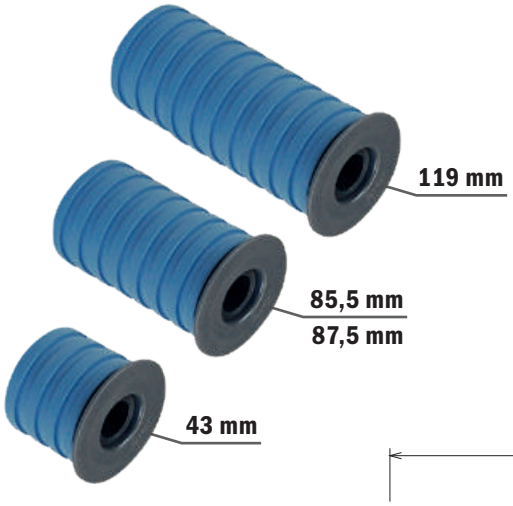

Part	Article-Nr.	L	ØA
223	22351	43	16
223	22352	43	18
223	22353	43	20
223	22301	85,5	16
223	22302	85,5	18
223	22303	85,5	20
223	22311	87,5	16
223	22312	87,5	18
223	22313	87,5	20
223	22364	119	12
223	22361	119	16
223	22362	119	18
223	22363	119	20

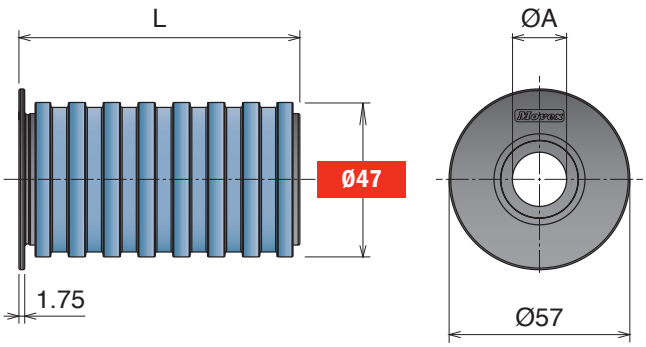

Tenuta stagna
Watertight
Wasserdicht

Materiale / *Material* / *Materialien:*
Rullino: Polietilene (PE) / *Polyethylene (PE)* / *Polyäthylen (PE)*
Gomma: TPR Rubber: TPR Gummi: TPR

224

Rullini di ritorno flangiati D=50 mm
Return roller with flange D=50 mm / Rückführrolle mit Seitenscheibe D=50 mm



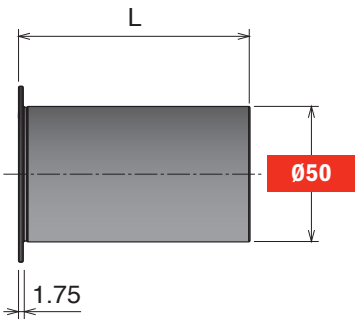

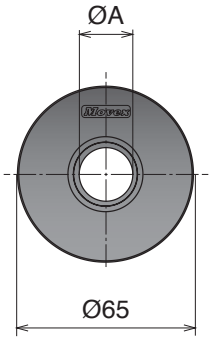

Part	Article-Nr.	L	ØA
224	22451	43	16
224	22452	43	18
224	22453	43	20
224	22401	85,5	16
224	22402	85,5	18
224	22403	85,5	20
224	22411	87,5	16
224	22412	87,5	18
224	22413	87,5	20
224	22464	119	12
224	22461	119	16
224	22462	119	18
224	22463	119	20

Tenuta stagna
Watertight
Wasserdicht

225

Rullini di ritorno flangiati gommati D=57 mm
Return roller with flange and rubber D=57 mm / Rückführrolle gummiert mit Seitenscheibe D=57 mm

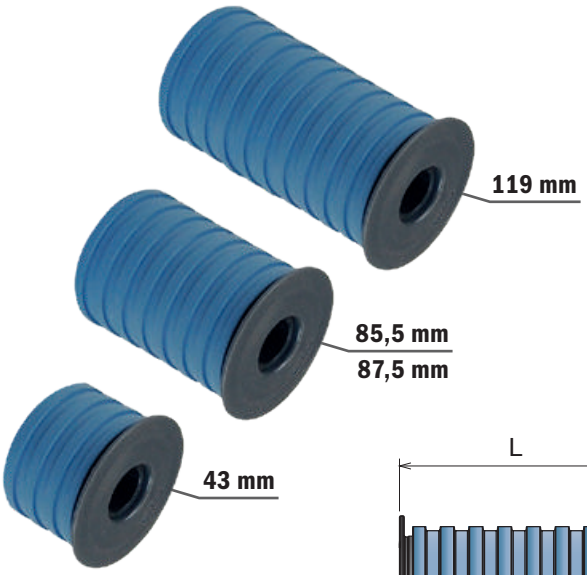

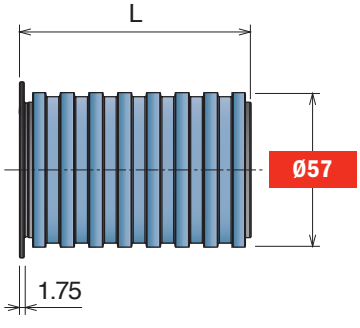

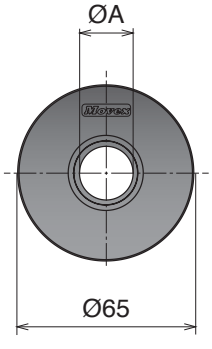

Part	Article-Nr.	L	ØA
225	22551	43	16
225	22552	43	18
225	22553	43	20
225	22501	85,5	16
225	22502	85,5	18
225	22503	85,5	20
225	22511	87,5	16
225	22512	87,5	18
225	22513	87,5	20
225	22564	119	12
225	22561	119	16
225	22562	119	18
225	22563	119	20

Tenuta stagna
Watertight
Wasserdicht

226 Rullini di ritorno flangiati D=60 mm

Return roller with flange D=60 mm / Rückführrolle mit Seitenscheibe D=60 mm

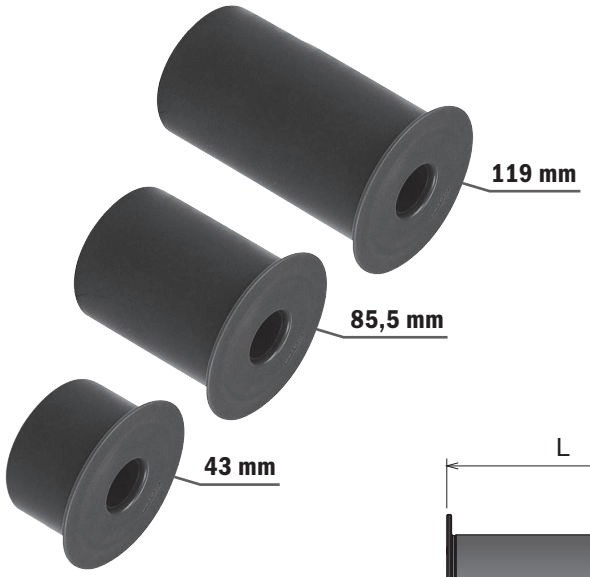

Part	Article-Nr.	L	ØA
226	22651	43	16
226	22652	43	18
226	22653	43	20
226	22601	85,5	16
226	22602	85,5	18
226	22603	85,5	20
226	22664	119	12
226	22661	119	16
226	22662	119	18
226	22663	119	20

Tenuta stagna
Watertight
Wasserdicht

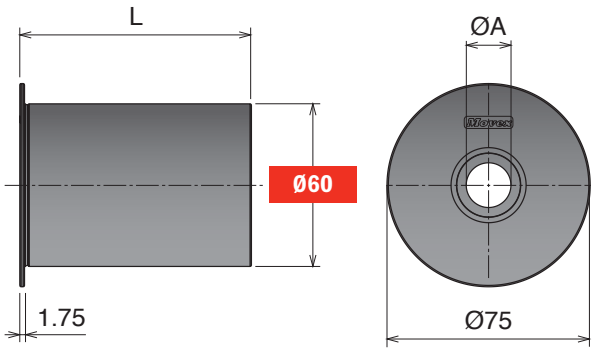

227 Rullini di ritorno flangiati gommati D=67 mm

Return roller with flange and rubber D=67 mm / Rückführrolle gummiert mit Seitenscheibe D=67 mm

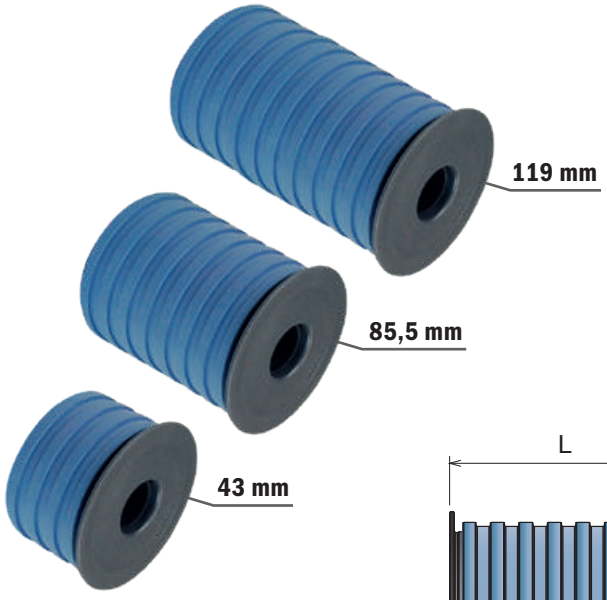

Part	Article-Nr.	L	ØA
227	22751	43	16
227	22752	43	18
227	22753	43	20
227	22701	85,5	16
227	22702	85,5	18
227	22703	85,5	20
227	22764	119	12
227	22761	119	16
227	22762	119	18
227	22763	119	20

Tenuta stagna
Watertight
Wasserdicht

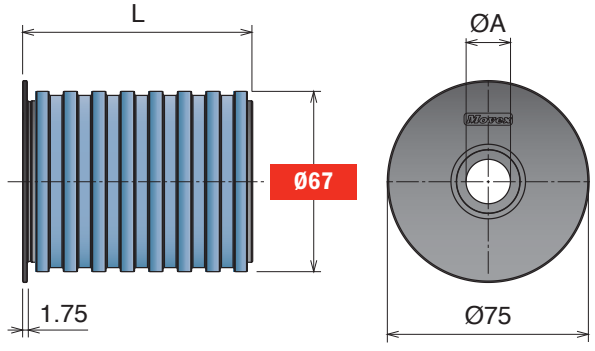

Materiale / *Material / Materialien:*
Polietilene (PE) / *Polyethylene (PE) / Polyäthylen (PE)*

208 Rullini di ritorno flangiati D=42.5 mm
Return roller with flange D=42.5 mm / Rückführrolle mit Seitenscheibe D=42.5 mm

Part	Article-Nr.	ØA
208	20801	16
208	20802	18
208	20803	20



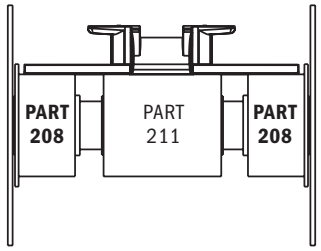

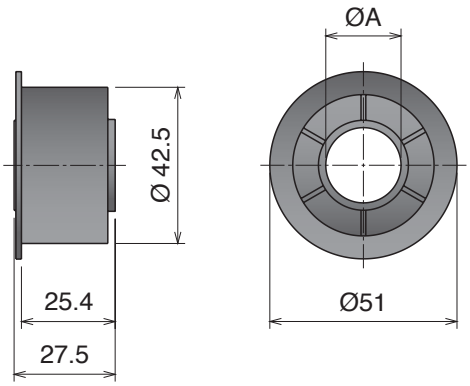

209 Rullini di ritorno flangiati D=43 mm
Return roller with flange D=43 mm / Rückführrolle mit Seitenscheibe D=43 mm

Part	Article-Nr.	ØA
209	20901	16
209	20902	18
209	20903	20



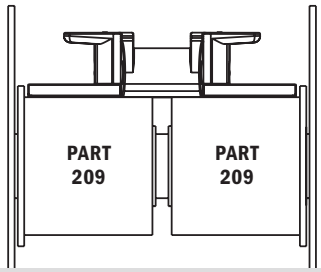

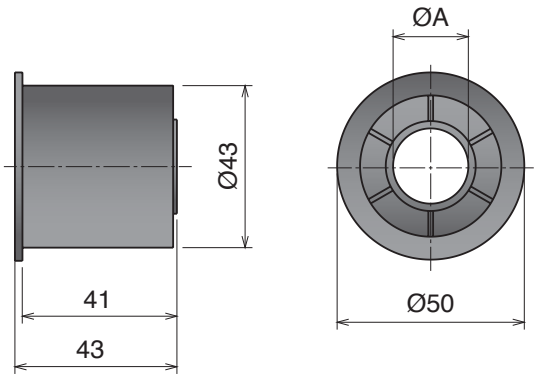

232 Rullini di ritorno flangiati Ø68
Return roller with flange Ø68 / Rückführrolle mit Seitenscheibe Ø68

Max recommended tightening torque: 0,3 N mt

Part	Article-Nr.	ØA
232	23201	15
232	23202	16
232	23203	18
232	23204	20



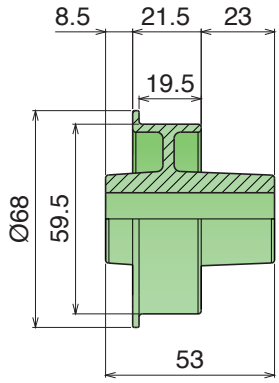

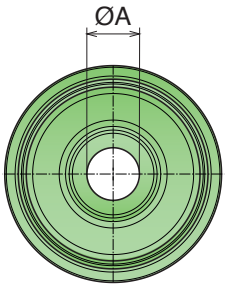

210 Rullini doppio di ritorno
Double return roller / Doppel- Rücklaufrolle

Part	Article-Nr.	ØA
210	21001	16
210	21002	18
210	21003	20



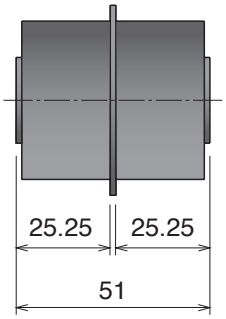

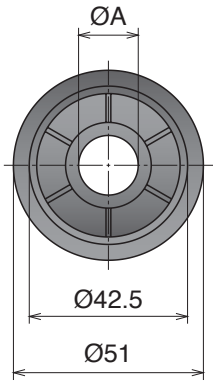

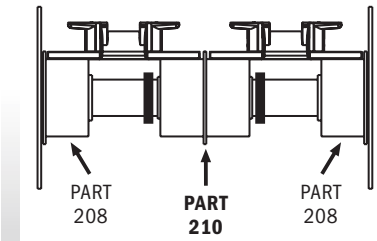

211 Rullini di ritorno D=42.5 mm
Return roller D=42.5 mm / Rückführrolle D=42.5 mm

Part	Article-Nr.	ØA
211	21101	16
211	21102	18
211	21103	20



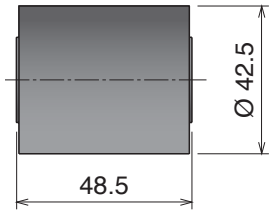

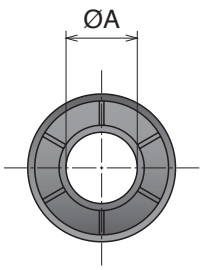

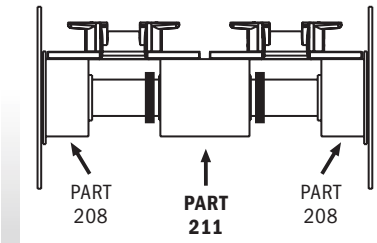

Materiale / *Material / Materialien:*
Poliammide (PA) / *Polyamide (PA) / Polyamid (PA)*

207 Flangia
Flange / Seitenscheibe

Range Extension

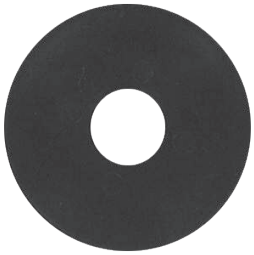

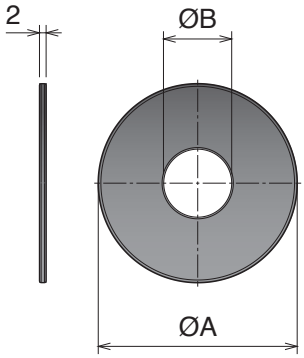

	Part	Article-Nr.	ØA	ØB
New	207	20719	50	12
	207	20712	50	16
	207	20713	50	18
	207	20714	50	20
New	207	20720	60	12
	207	20701	60	16
	207	20702	60	18
	207	20703	60	20
New	207	20721	70	12
	207	20704	70	16
	207	20705	70	18
	207	20706	70	20
New	207	20722	80	12
	207	20707	80	16
	207	20708	80	18
	207	20709	80	20

233 Flangia
Flange / Seitenscheib



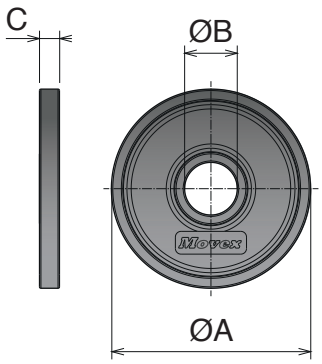

Part	Article-Nr.	ØA	ØB	C
233	23303	25,5	20	7,25
233	23304	60	20	7,25
233	23305	70	16	7
233	23307	70	20	7
233	23302	90	20	5

213 Pattino oscillante innesto rapido
Snap-on sliding shoe / Rücklaufschuh, aufsteckbar

Part	Article-Nr.	ØA
213	21301	16
213	21302	18
213	21303	20



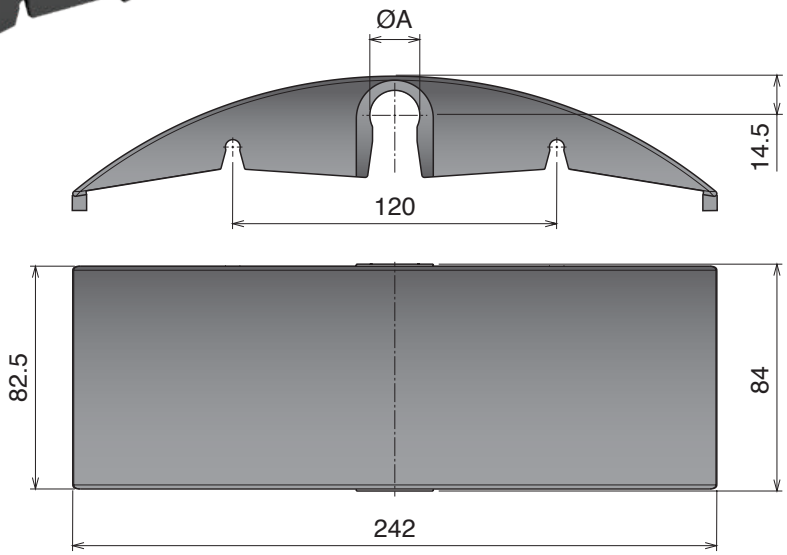

221 Collare di riferimento con chiavetta
Split collar with keyway / geteilter Stellring mit Nut

Max recommended tightening torque: 0,3 N mt

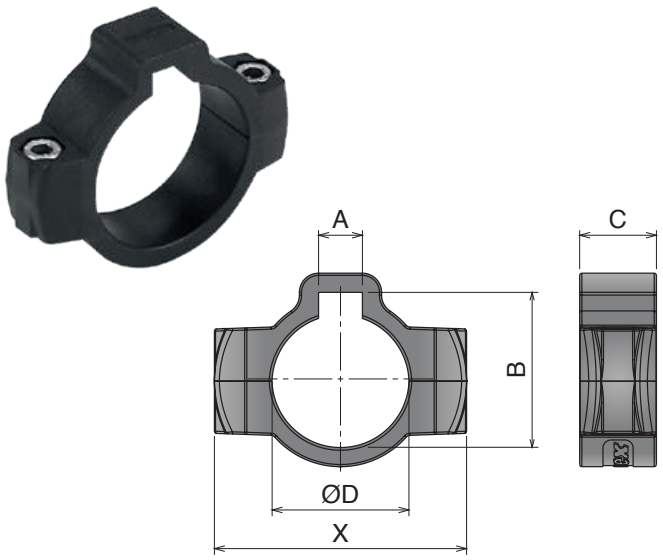

Part	Article-Nr.	A	B	C	ØD	X
221	22101	8	28,3	14	25	46
221	22102	8	33,3	16	30	51
221	22103	10	38,3	16	35	57
221	22104	12	43,3	18	40	64

Part	Article-Nr.	A	B	C	ØD	X
221	22101Y	6,85	28,3	14	1”	46
221	22102Y	6,85	34,7	16	1,25”	52
221	22104Y	10,025	42,4	18	1,5”	64

215 Collare di riferimento
Split collar / geteilter Stellring

Max recommended tightening torque: 0,3 N mt

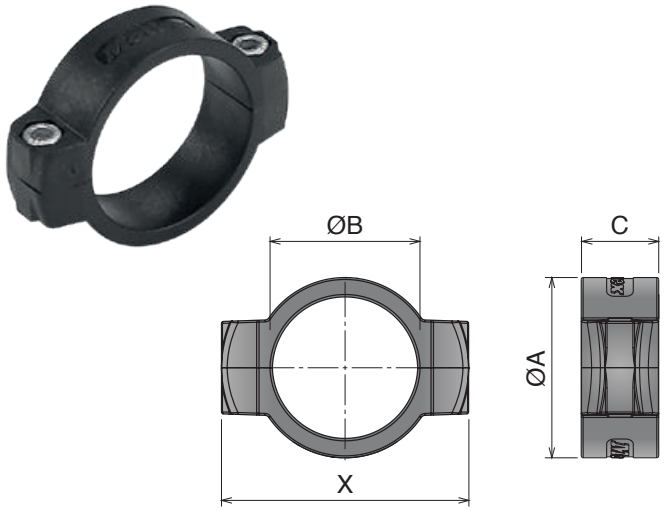

Part	Article-Nr.	ØA	ØB	C	X
215	21501	20	12	12	29,5
215	21502	22	14	12	31,5
215	21509	24	16	12	37
215	21503	26	18	14	40
215	21504	28	20	14	40
215	21505	32	25	14	46
215	21506	38	30	16	51
215	21507	43	35	16	57
215	21508	48	40	16	64

Part	Article-Nr.	ØA	ØB	C	X
215	21501Y	20	0,5”	12	29,5
215	21503Y	26	0,75”	14	40
215	21505Y	32	1”	14	46
215	21506Y	38	1,25”	16	52
215	21508Y	48	1,5”	18	64

217 Collare di riferimento
Split collar / geteilter Stellring

Max recommended tightening torque: 0,3 N mt

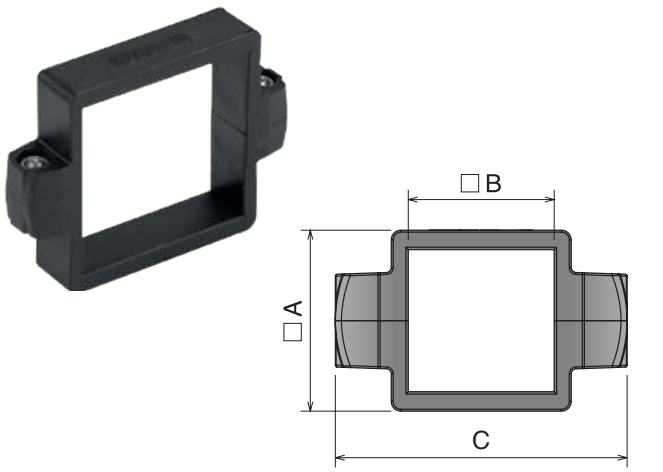

Part	Article-Nr.	□A	□B	C
217	21701	33	25	55
217	21702	37	30	60
217	21703	47	40	70
217	21704	59	50	81
217	21705	69	60	92

Materiale / *Material / Materialien:*
Poliammide (PA) / *Polyamide (PA) / Polyamid (PA)*

230 Piastrina
Spacer / Führungsscheiben

Part	Article-Nr.
230	23001



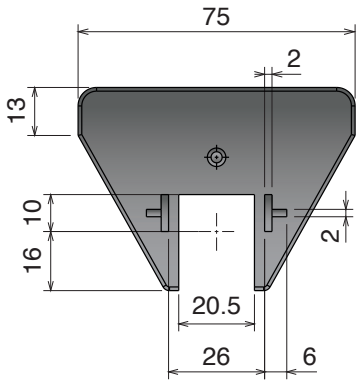

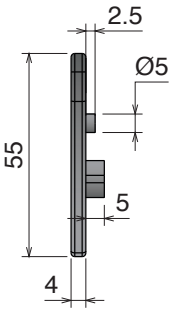

231 Distanziale per serpentina
Spacer for serpentine / Montageblock

Part	Article-Nr.	W
231	23101	84
231	23102	88
231	23103	108
231	23104	116



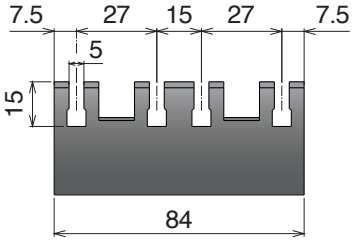

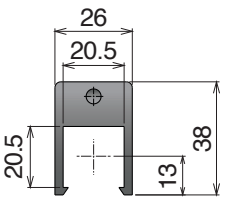

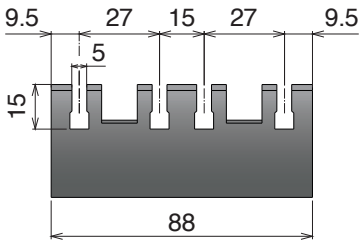

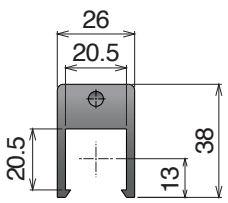

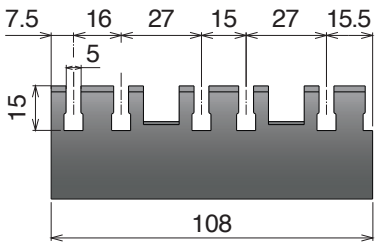

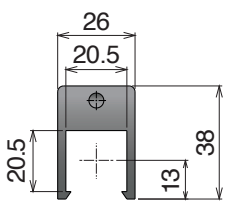

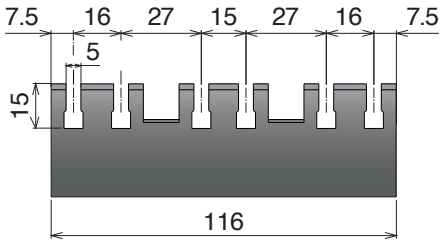

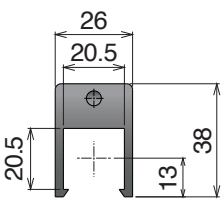

359

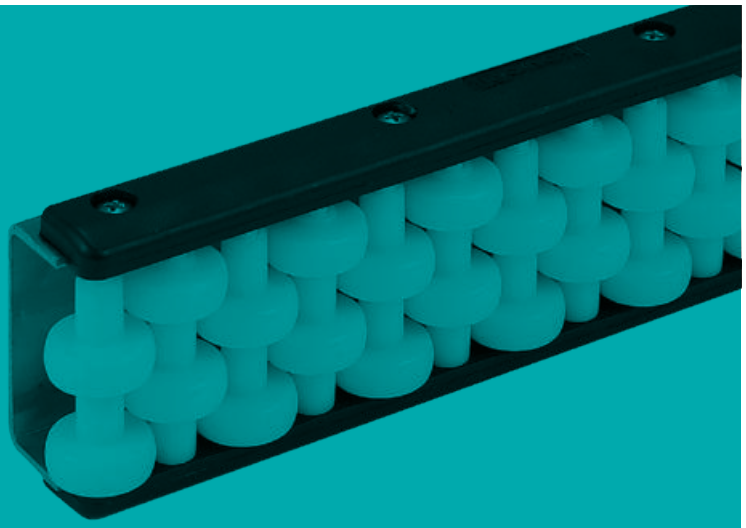

Conveyor components

301  Pag 361
302  Pag 361
305  Pag 362
306  Pag 362
307  Pag 363
308  Pag 363
309  Pag 364
310  Pag 364
311  Pag 365
312  Pag 365
398  Pag 366
398  Pag 366
313  Pag 367
314  Pag 367
314  Pag 367
315  Pag 368
316  Pag 368
317  Pag 369
317  Pag 369
318  Pag 370
319  Pag 370
3001  Pag 370
320  Pag 371
3002  Pag 371
321  Pag 372
322  Pag 372
323  Pag 372
324  Pag 373
325  Pag 373
326  Pag 373
327  Pag 373
328  Pag 374
329  Pag 374
330  Pag 374
390  Pag 374
392  Pag 375
393  Pag 375
336  Pag 375
394  Pag 376
341  Pag 376
331  Pag 377
331  Pag 377
345  Pag 378
337  Pag 379
338  Pag 379
339  Pag 379
349  Pag 380
350  Pag 380

351  Pag 380

352  Pag 380

347  Pag 381

348  Pag 381

346  Pag 382

356  Pag 382

357  Pag 382

335 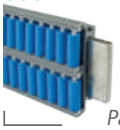 Pag 383

358 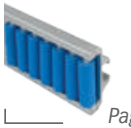 Pag 384

364  Pag 384

359  Pag 385

365  Pag 385

360  Pag 386

360  Pag 387

366  Pag 386/387

361  Pag 388

361  Pag 389

367  Pag 388/389

364-365 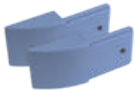 Pag 390

366-367 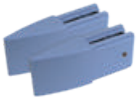 Pag 391

366  Pag 392

367  Pag 392

364  Pag 393

365  Pag 393

395  Pag 394

362  Pag 394

358 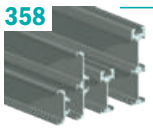 Pag 394

333  Pag 394

353  Pag 395

354  Pag 395

355  Pag 395

363  Pag 396

396  Pag 397

363 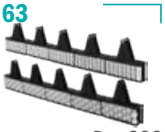 Pag 398

199  Pag 399

368 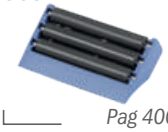 Pag 400

369 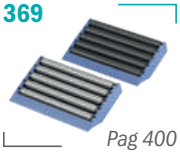 Pag 400

370 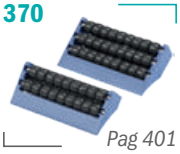 Pag 401

371 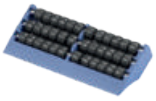 Pag 401

372  Pag 402

373 Pag 402

383 Pag 403

384 Pag 403

385 Pag 404

386 Pag 404

397 Pag 405

3003 Pag 405

374 Pag 406

375 Pag 406

377 Pag 407

378 Pag 407

379 Pag 408

380 Pag 408

381 Pag 409

382 Pag 409

376 Pag 410

376 Pag 410

376 Pag 410

391 Pag 411

387 Pag 412

388 Pag 412

Materiale / *Material / Materialien:*
Supporto: PA *Support: PA Halter: PA*
Volantino: PA+ottone nichelato *Knob: PA+nickel plated brass Sterngriff: PA+ Messing vernickelt*
Tirante: Acciaio inox *Eyebolt: Stainless steel Augenschraube: Edelstahl*

301 Supporto laterale -piccolo-
Side bracket -small- / Geländerhalter -klein-

Part	Article-Nr.	ØA	B
301	30101	12	9
301	30105	14	9
301	30102	16	9
301	30103	12	10,5
301	30106	14	10,5
301	30104	16	10,5



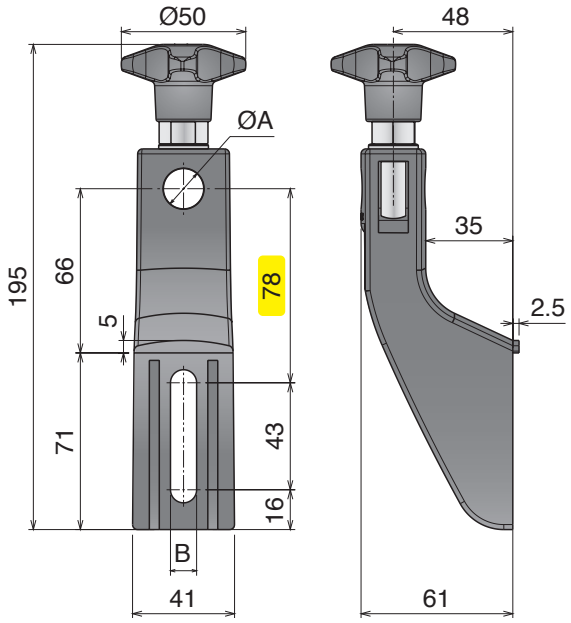

302 Supporto laterale -piccolo- volantino alto
Side bracket -small- high knob / Geländerhalter -klein- hoher Sterngriff

Part	Article-Nr.	ØA	B
302	30201	12	9
302	30205	14	9
302	30202	16	9
302	30203	12	10,5
302	30206	14	10,5
302	30204	16	10,5



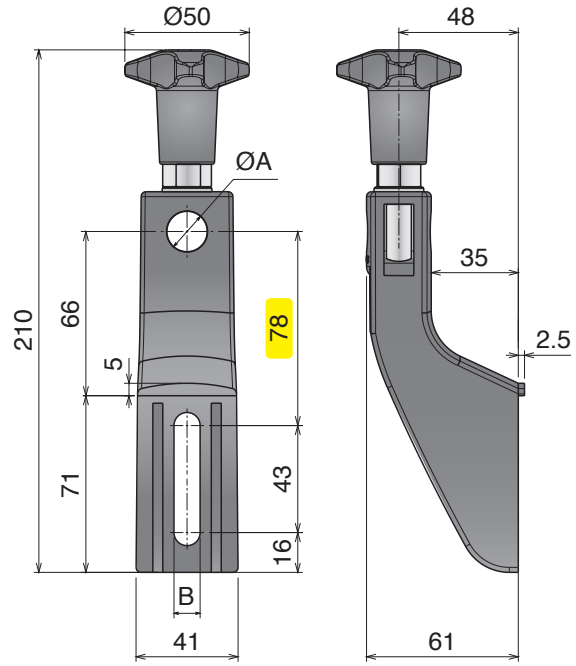

Materiale / *Material / Materialien:*
Supporto: PA *Support: PA Halter: PA*
Volantino: PA+ottone nichelato *Knob: PA+nickel plated brass Sterngriff: PA+ Messing vernickelt*
Tirante: Acciaio inox *Eyebolt: Stainless steel Augenschraube: Edelstahl*

305 Supporto laterale -medio-
Side bracket -medium- / Geländerhalter -medium-

Part	Article-Nr.	ØA	B
305	30501	12	9
305	30505	14	9
305	30502	16	9
305	30503	12	10,5
305	30506	14	10,5
305	30504	16	10,5



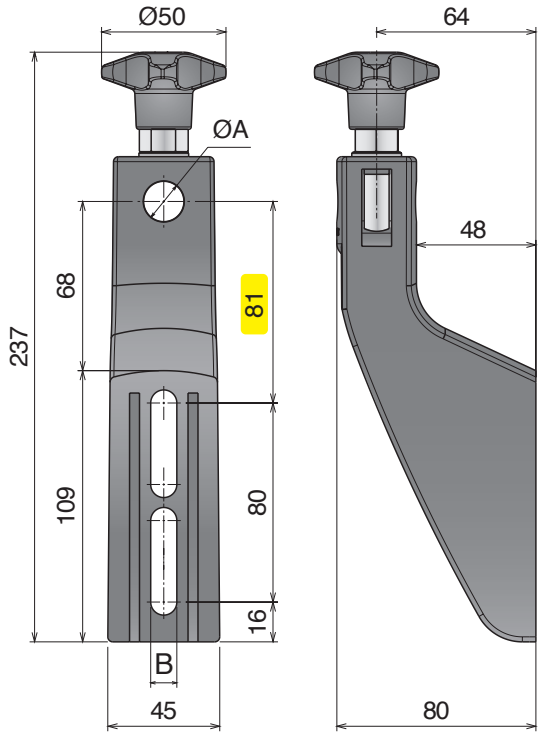

306 Supporto laterale -medio- volantino alto
Side bracket -medium- high knob / Geländerhalter -medium- hoher Sterngriff

Part	Article-Nr.	ØA	B
306	30601	12	9
306	30605	14	9
306	30602	16	9
306	30603	12	10,5
306	30606	14	10,5
306	30604	16	10,5



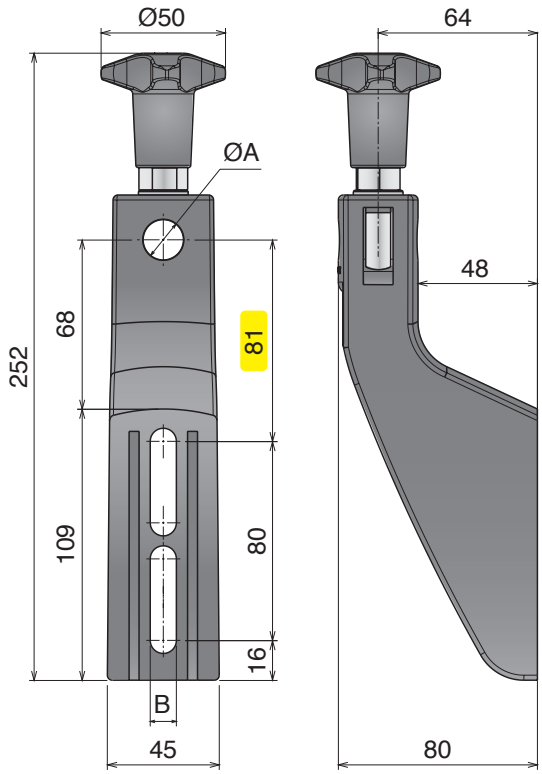

Materiale / *Material* / *Materialien:* Supporto: PA Support: PA Halter: PA
Volantino: PA+ottone nichelato Knob: *PA+nickel plated brass Sterngriff: PA+ Messing vernickelt*
Tirante: Acciaio inox *Eyebolt: Stainless steel Augenschraube: Edelstahl*
Testina: PA o Acciaio inox *Heads: PA or stainless steel Schwenkkopf: PA oder Edelstahl*
Vite, rondella e dado: Acciaio inox *Screw, washers and nut: Stainless steel Schraube, Unterlegs und Mutter: Edelstahl*

307 Supporto laterale -medio- orientabile
Side bracket -medium- adjustable / Geländerhalter -medium- einstellbar



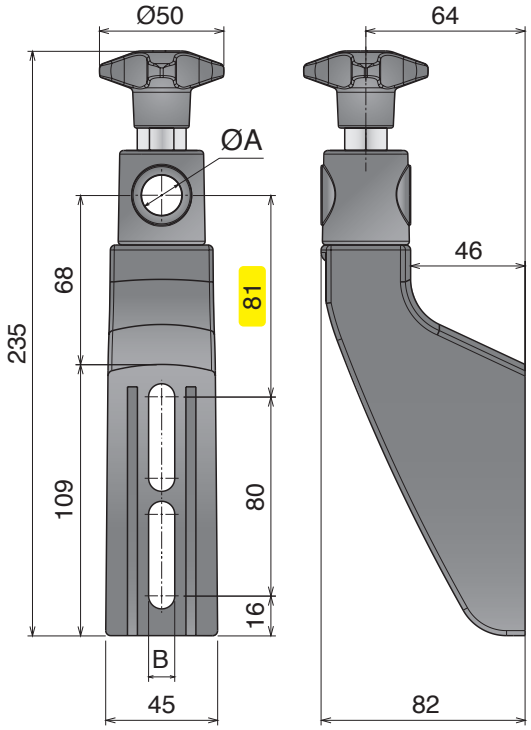

Part	Article-Nr.	ØA	B
307	30701	12	9
307	30705	14	9
307	30702	16	9
307	30703	12	10,5
307	30706	14	10,5
307	30704	16	10,5
307	30709	bracket	9
307	30710	bracket	10,5

308 Supporto laterale -medio- orientabile INOX
Side bracket -medium- adjustable SS / Geländerhalter -medium- einstellbar Edelstahl



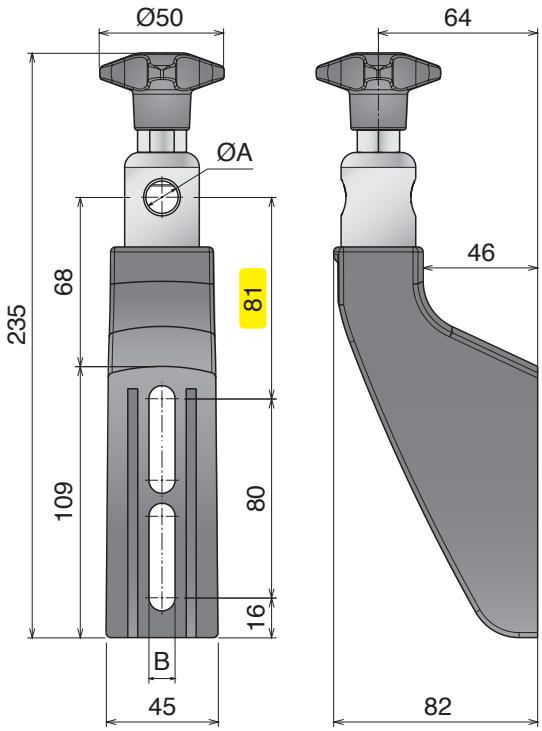

Part	Article-Nr.	ØA	B
308	30801	12	9
308	30805	14	9
308	30802	16	9
308	30803	12	10,5
308	30806	14	10,5
308	30804	16	10,5

Materiale / *Material / Materialien:*
Supporto: PA *Support: PA Halter: PA*
Volantino: PA+ottone nichelato *Knob: PA+nickel plated brass Sterngriff: PA+ Messing vernickelt*
Tirante: Acciaio inox *Eyebolt: Stainless steel Augenschraube: Edelstahl*

309 Supporto laterale -grande-
Side bracket -large- / Geländerhalter -groß-

Part	Article-Nr.	ØA	B
309	30901	12	9
309	30905	14	9
309	30902	16	9
309	30903	12	10,5
309	30906	14	10,5
309	30904	16	10,5



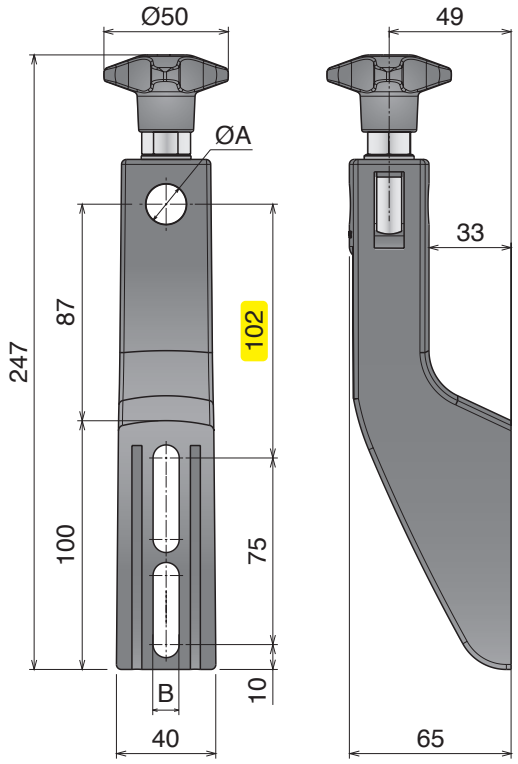

310 Supporto laterale -grande- volantino alto
Side bracket -large- high knob / Geländerhalter -groß- hoher Sterngriff

Part	Article-Nr.	ØA	B
310	31001	12	9
310	31005	14	9
310	31002	16	9
310	31003	12	10,5
310	31006	14	10,5
310	31004	16	10,5



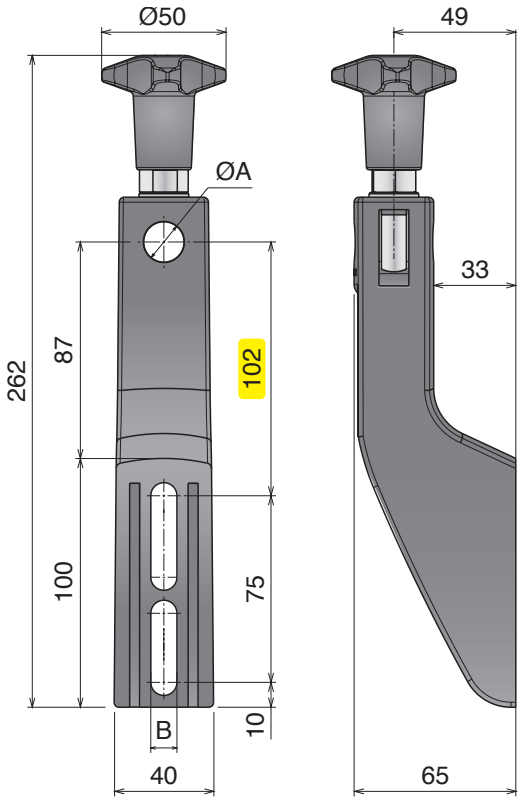

Materiale / *Material* / *Materialien:* Supporto: PA Support: PA Halter: PA
Volantino: PA+ottone nichelato Knob: *PA+nickel plated brass Sterngriff: PA+ Messing vernickelt*
Tirante: Acciaio inox *Eyebolt: Stainless steel Augenschraube: Edelstahl*
Testina: PA o Acciaio inox *Heads: PA or stainless steel Schwenkkopf: PA oder Edelstahl*
Vite, rondella e dado: Acciaio inox *Screw, washers and nut: Stainless steel Schraube, Unterlegs und Mutter: Edelstahl*

311 Supporto laterale -grande- orientabile
Side bracket -large- adjustable / Geländerhalter -groß- einstellbar



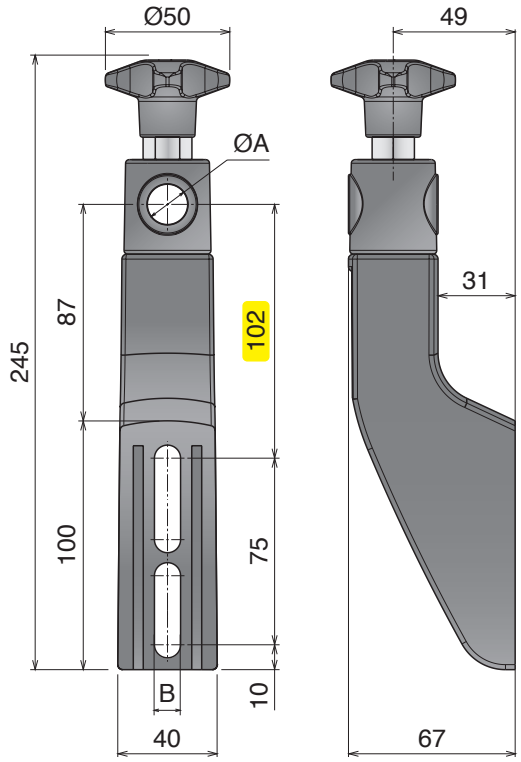

Part	Article-Nr.	ØA	B
311	31101	12	9
311	31105	14	9
311	31102	16	9
311	31103	12	10,5
311	31106	14	10,5
311	31104	16	10,5
311	31109	bracket	9
311	31110	bracket	10,5

312 Supporto laterale -grande- orientabile INOX
Side bracket -large- adjustable SS / Geländerhalter -groß- einstellbar Edelstahl



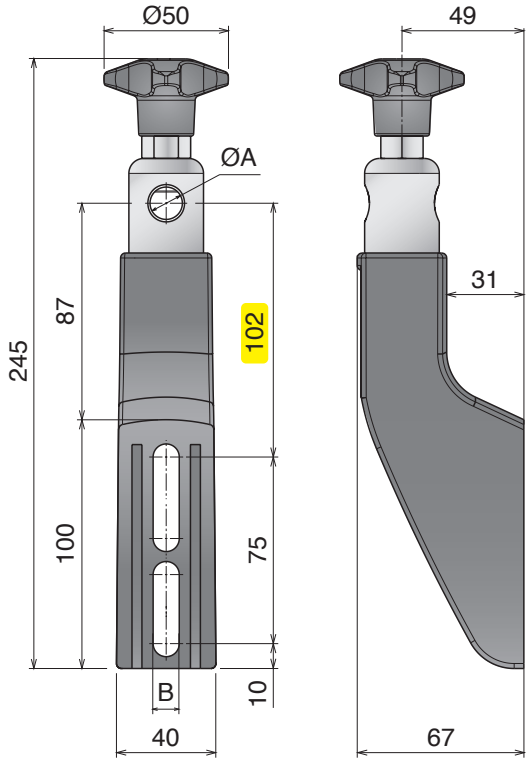

Part	Article-Nr.	ØA	B
312	31201	12	9
312	31205	14	9
312	31202	16	9
312	31203	12	10,5
312	31206	14	10,5
312	31204	16	10,5

Materiale / *Material / Materialien:*
Supporto: Acciaio inox *Support: Stainless steel* *Halter: Edelstahl*
Volantino: PA+ottone nichelato *Knob: PA+nickel plated brass* *Sterngriff: PA+ Messing vernickelt*

398 Supporto laterale inox -medio- orientabile
SS bracket -medium- adjustable / Edelstahl Geländerhalter -medium- einstellbar

Stainless Steel | AISI 304

Part	Article-Nr.	ØA
398	39860	12
398	39862	14
398	39861	16



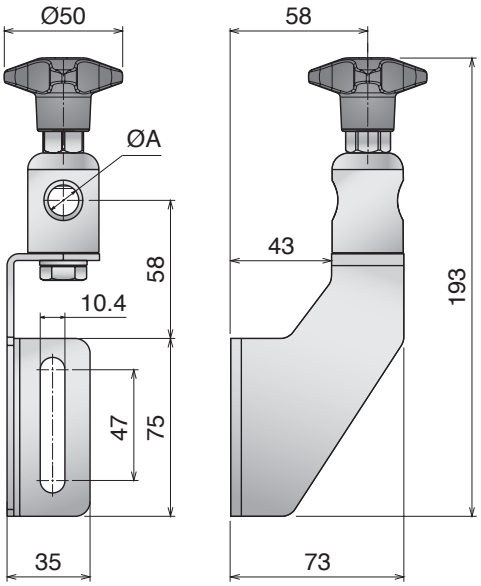

Supporto laterale inox -grande- orientabile
SS bracket -large- adjustable / Edelstahl Geländerhalter -groß- einstellbar

Stainless Steel | AISI 304

Part	Article-Nr.	ØA
398	39870	12
398	39872	14
398	39871	16



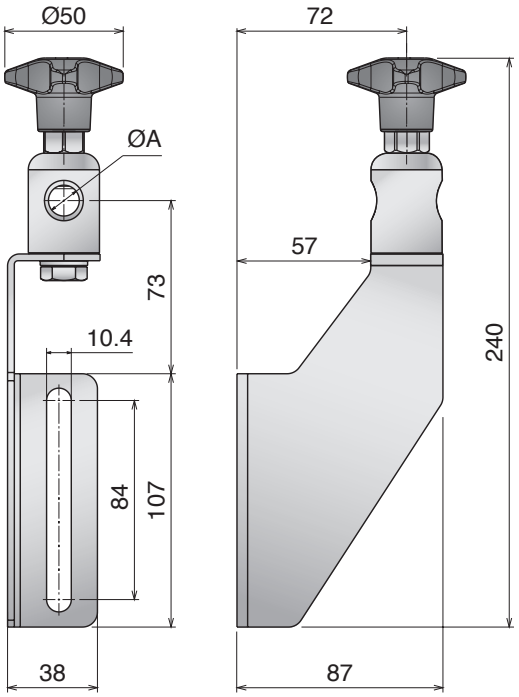

Materiale / *Material / Materialien:*
Volantino: PA+ottone nichelato Knob: *PA+nickel plated brass Sterngriff: PA+ Messing vernickelt*
Tirante: Acciaio inox *Eyebolt: Stainless steel Augenschraube: Edelstahl*
Testina: PA o Acciaio inox *Heads: PA or stainless steel Schwenkkopf: PA oder Edelstahl*
Vite, rondella e dado: Acciaio inox *Screw, washers and nut: Stainless steel Schraube, Unterlegs und Mutter: Edelstahl*

313 Testina orientabile
Adjustable head / Schwenkkopf



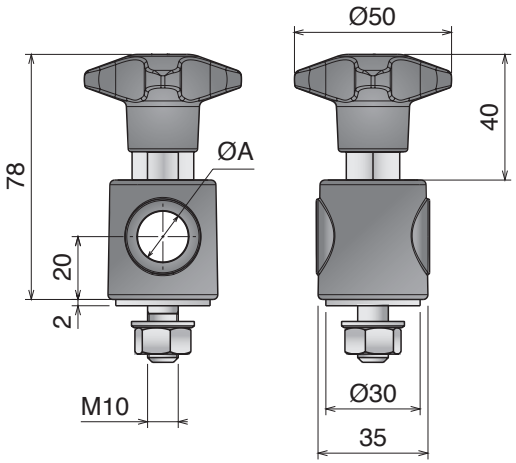

Part	Article-Nr.	ØA
313	31301	12
313	31303	14
313	31302	16
313	31311	12-without knob
313	31313	14-without knob
313	31312	16-without knob

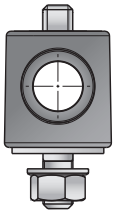

Without knob



Spacer 31330

314 Testina orientabile, acciaio inox
Adjustable head, stainless steel / Schwenkkopf, Edelstahl



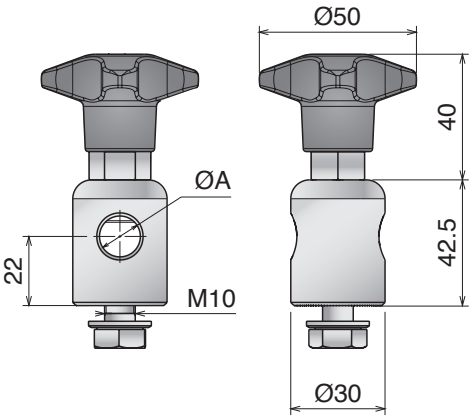

Part	Article-Nr.	ØA
314	31401	12
314	31403	14
314	31402	16
314	31411	12-without knob
314	31413	14-without knob
314	31412	16-without knob

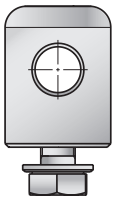

Without knob

Testina orientabile alta, acciaio inox
Adjustable head, stainless steel / Schwenkkopf, Edelstahl



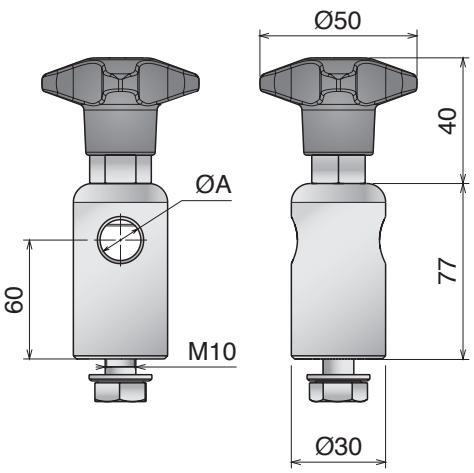

Part	Article-Nr.	ØA
314	31409	12
314	31414	14
314	31410	16
314	31419	12-without knob
314	31421	14-without knob
314	31420	16-without knob

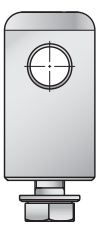

Without knob

Materiale / *Material* / *Materialien:*
Acciaio inox / Stainless steel / Edelstahl

315 Supporto laterale "L"
L-bracket / Winkel

Stainless Steel | AISI 304

Part	Article-Nr.	Type
315	31501	A
315	31502	B



Type A - without nose

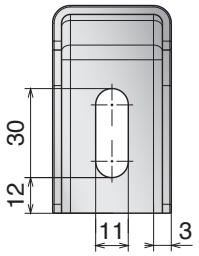

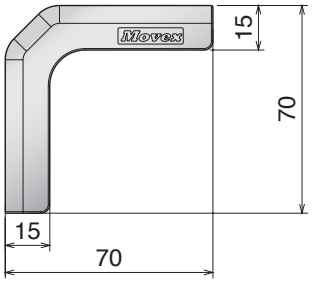

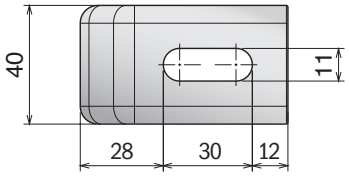

Type B - with nose

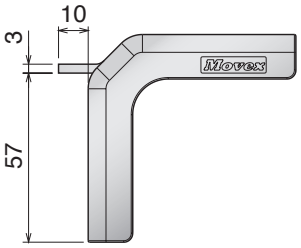

316 Supporto laterale "L"
L-bracket / Winkel

Stainless Steel | AISI 304

Part	Article-Nr.	Type
316	31601	A
316	31602	B



Type A - without nose

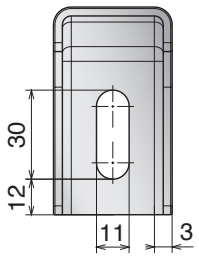

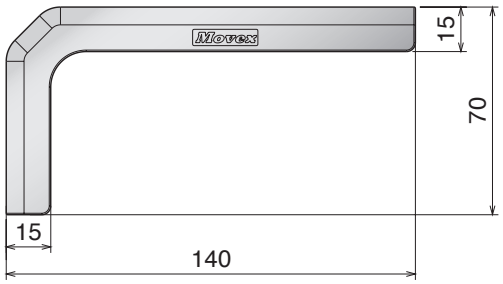

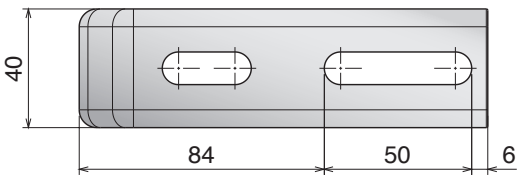

Type B - with nose

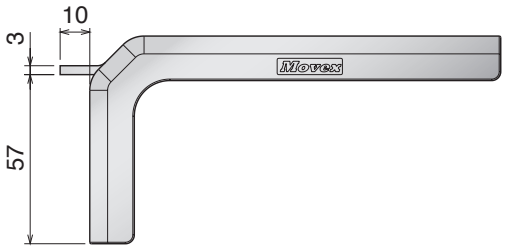

Movex

317 Volantino
Star knob / Sterngriff

Part	Article-Nr.	Ø
317	31701	50
317	31702	40



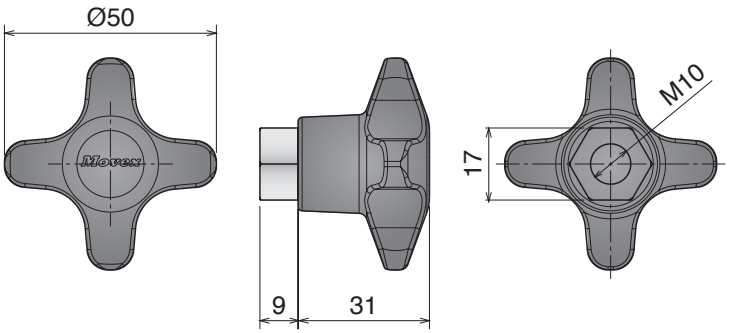



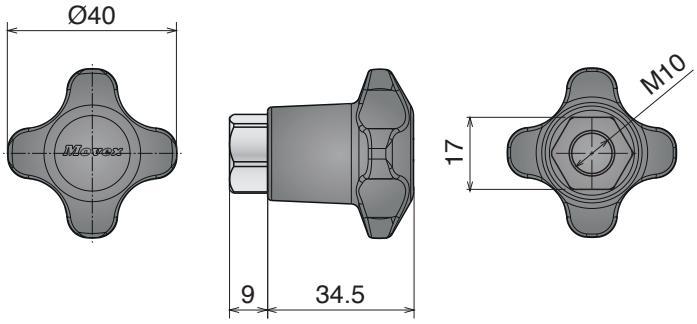

Volantino con tirante
Star knob with eye-bolt / Sterngriff mit Augenschraube

Part	Article-Nr.	ØA
317	31799	12
317	31797	14
317	31798	16



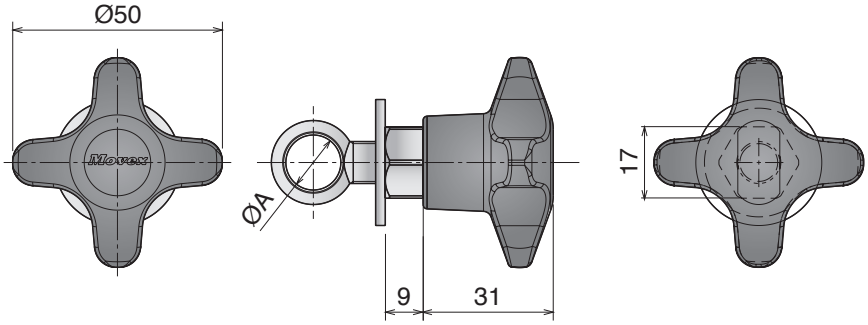

Materiale / *Material* / *Materialien:*
Poliammide + ottone nichelato / Acciaio inox / Ottone
Polyamide + nickel plated brass / Stainless steel / Brass
Polyamid + Messing vernickelt / Edelstahl / Messing

318 Volantino
Star knob / Sterngriff

Part	Article-Nr.
318	31801



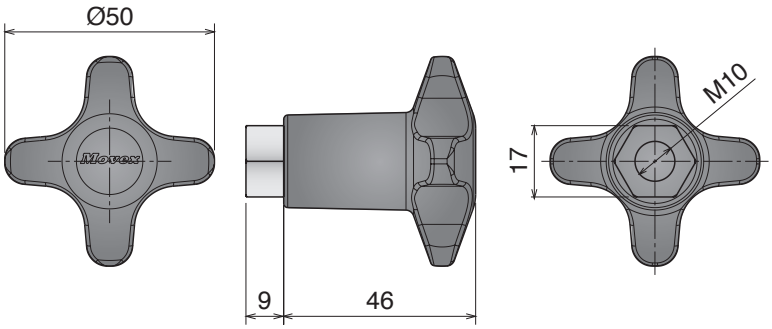

319 Volantino
Star knob / Sterngriff

Part	Article-Nr.	Ø
319	31901	50



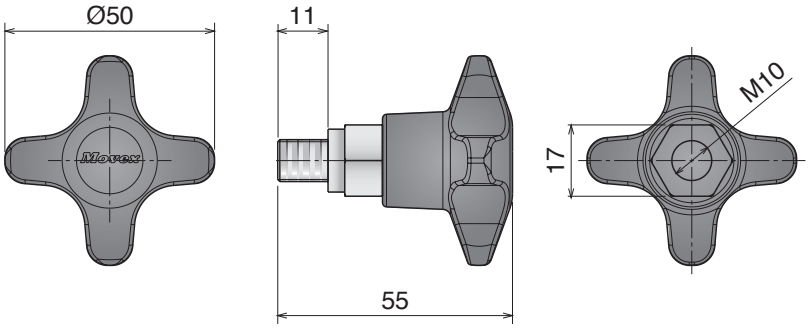

3001 Volantino a croce con boccola filettata
Star knob with threaded bush/ Sterngriff mit Innengewinde

New

Part	Article-Nr.	Threaded bush material
3001	300101	Stainless steel
3001	300102	Brass



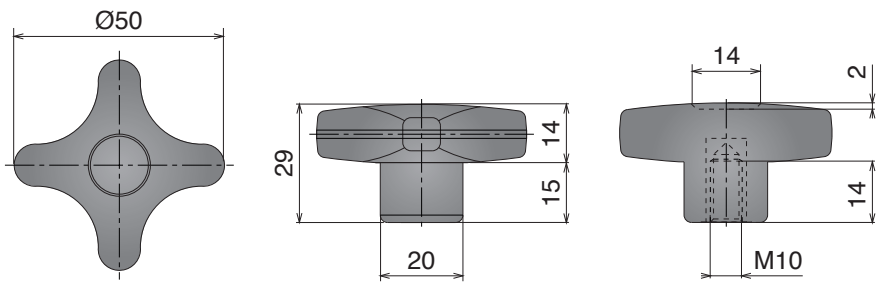

Materiale / *Material / Materialien:*
Part. 320: Poliammide + ottone nichelato / Polyamide + nickel plated brass / Polyamid + messing vernickelt
Part. 3002: Poliammide + ottone / Polyamide + brass / Polyamid + messing

320 Volantino Ø80
Star knob Ø80 / Sterngriff Ø80

Part	Article-Nr.	A
320	32001	M12
320	32002	M16



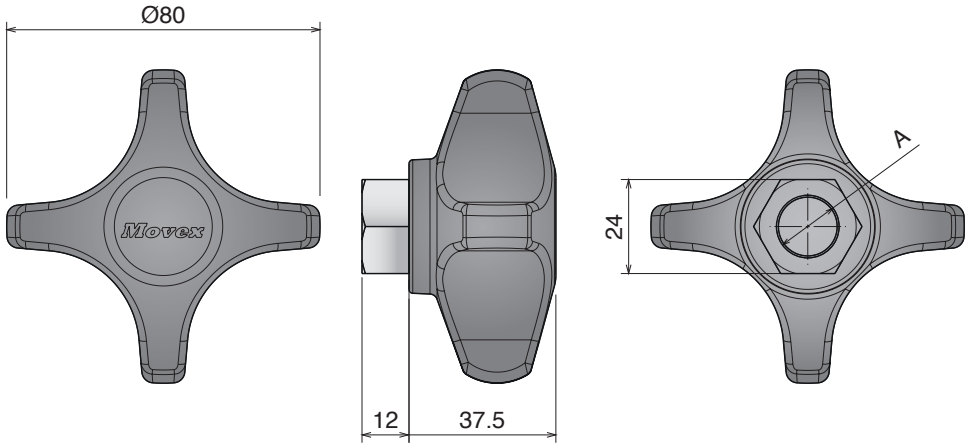

3002 Tirante con boccola filettata
Handle with threaded insert / T-Griff mit Innengewinde

New

Part	Article-Nr.	A	B	C	ØD	E	F	G	H
3002	300201	50	15	5	M6	14	17	16	24
3002	300202	50	15	5	M8	14	17	16	24
3002	300203	60	18	6	M10	16.5	24	15	33



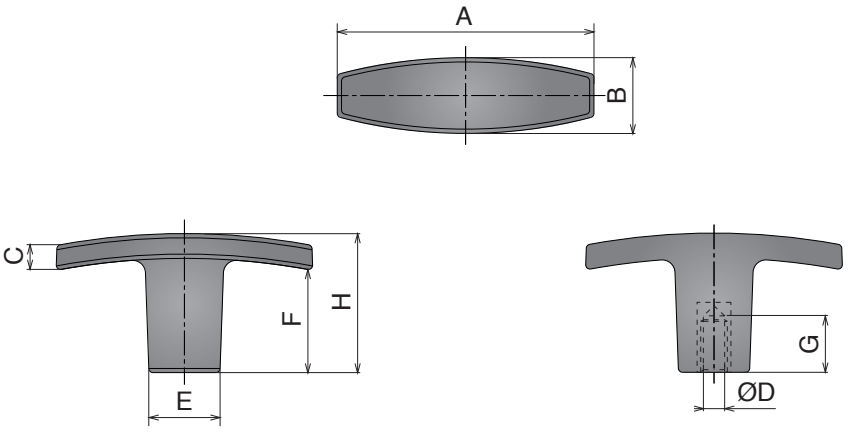

Materiale / *Material / Materialien:*
Poliammide/*Polyamide/Polyamid*

321 Distanziale per supporto -piccolo-
Spacer for bracket -small- / Distanzstück für Geländerhalter -klein-t

Part	Article-Nr.
321	32101



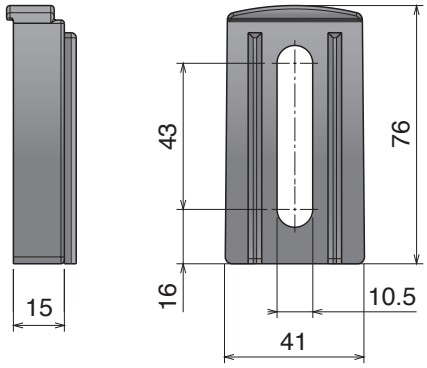

Use with bracket
part. 301-302
pag 361

322 Distanziale per supporto -medio-
Spacer for bracket -medium- / Distanzstück für Geländerhalter -medium-

Part	Article-Nr.
322	32201



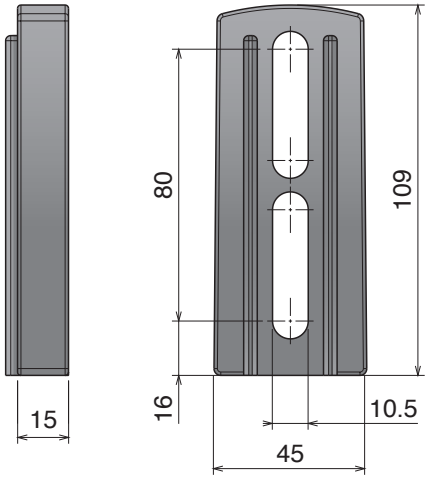

Use with bracket
part. 305-306-307-308
pag 362-363

323 Distanziale per supporto -grande-
Spacer for bracket -large- / Distanzstück für Geländerhalter -groß-

Part	Article-Nr.
323	32301



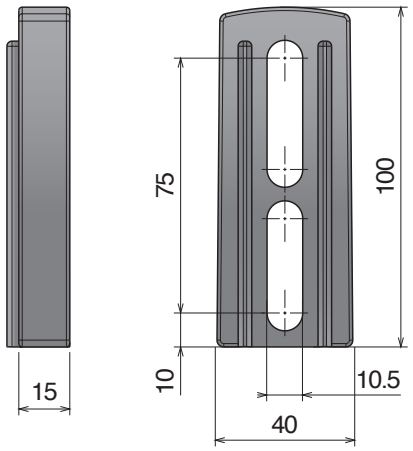

Use with bracket
part. 309-310-311-312
pag 364-365

324

Morsetto singolo per guida laterale conica
Single clamp for conical side guide / Einfachklemme für konische Seitenführung

Part	Article-Nr.
324	32401



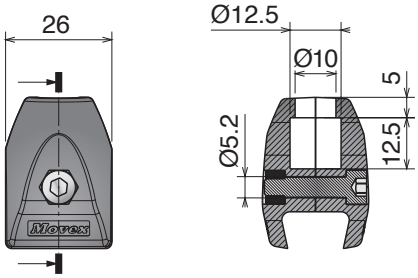

Pin design
pag 380

325

Morsetto singolo per guida laterale conica
Single clamp for conical side guide / Einfachklemme für konische Seitenführung

Part	Article-Nr.
325	32501



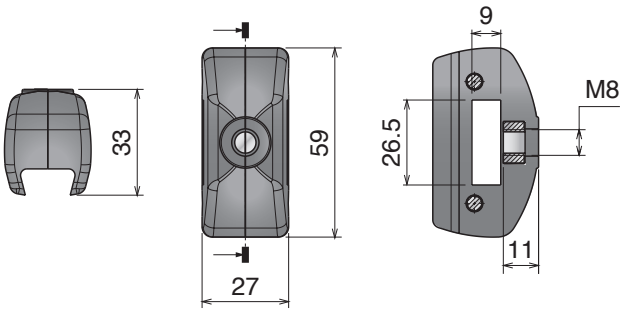

326

Morsetto singolo per guida laterale conica
Single clamp for conical side guide / Einfachklemme für konische Seitenführung

Part	Article-Nr.
326	32601



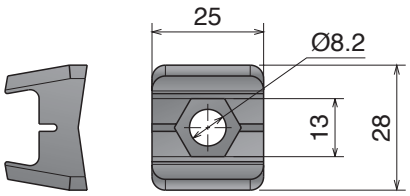

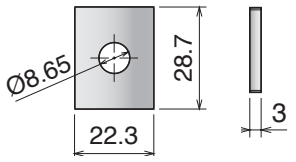

Reinforcement plate Art-Nr. 33201

327

Morsetto doppio per guida laterale conica
Double clamp for conical side guide / Doppelklemme für konische Seitenführung

Part	Article-Nr.	ØA
327	32701	without pin
327	32702	12
327	32703	16



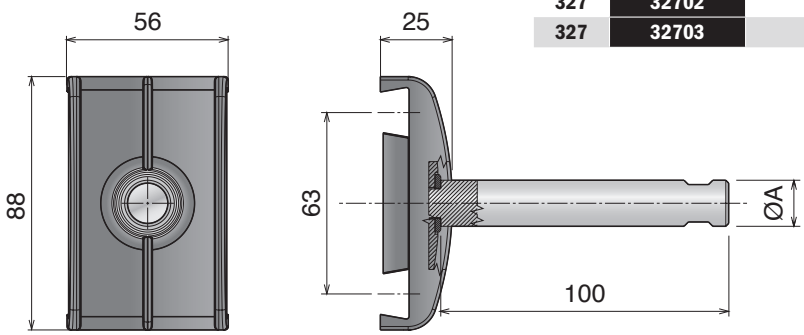

Materiale / *Material / Materialien:*
Acciaio inox / Stainless steel / Edelstahl

328 Morsetto singolo per guida laterale conica
Single clamp for conical side guide / Einfachklemme für konische Seitenführung

Part	Article-Nr.	Material	Type
328	32801	AISI 304	A
328	32802	AISI 304	B
328	32811	AISI 316	A



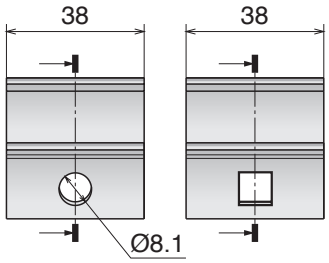

Type A *Type B*

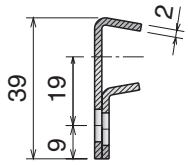

329 Morsetto doppio per guida laterale conica
Double clamp for conical side guide / Doppelklemme für konische Seitenführung

Part	Article-Nr.	A	Type
329	32904	50,0	A
329	32901	63,5	A
329	32902	82,55	A
329	32903	95,25	A
329	32911	63,5	B
329	32912	82,55	B
329	32913	95,25	B



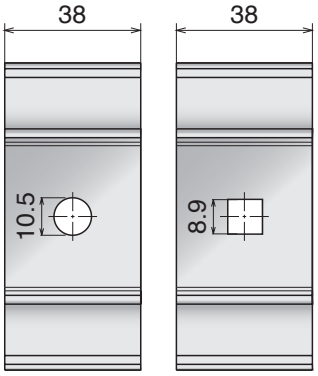

Type A *Type B*

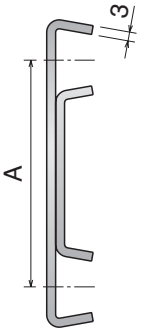

330 Morsetto singolo per guida laterale conica
Single clamp for conical side guide / Einfachklemme für konische Seitenführung

Part	Article-Nr.	A
330	33001	15
330	33002	26
330	33003	20
330	33004	30



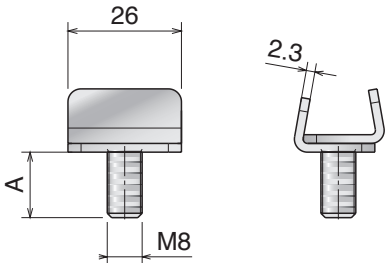

390 Elemento di giunzione
Connecting element / Verbinder

Part	Article-Nr.	
390	39001	



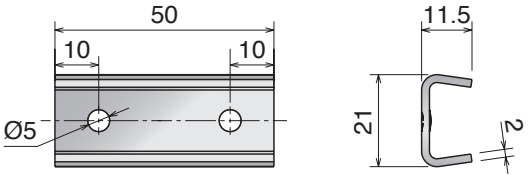

392 Elemento di connessione
Connecting clamp / Verbindungsklemme

Stainless steel

Part	Article-Nr.	A
392	39201	75
392	39202	100
392	39203	150



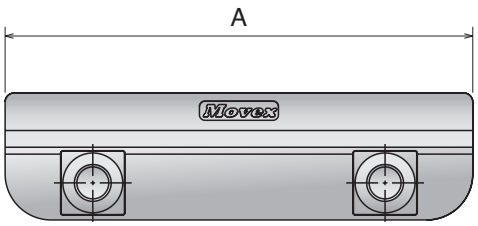

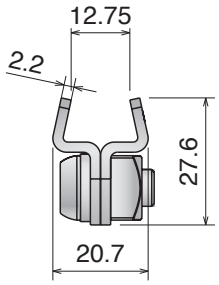

393 Elemento di connessione
Connecting clamp / Verbindungsklemme

Stainless steel

Part	Article-Nr.
393	39302



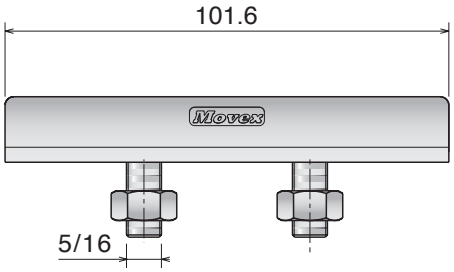

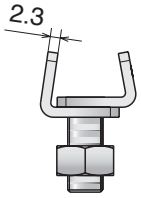

336 Morsetto aggiustabile guide coniche
Adjustable clamp for conical guide / verstellbare Klemme für konische Führungen

Part	Article-Nr.
336	33601

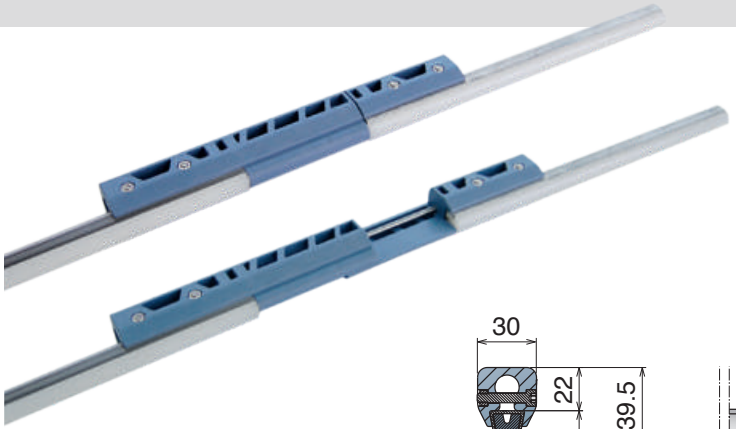

CLOSE

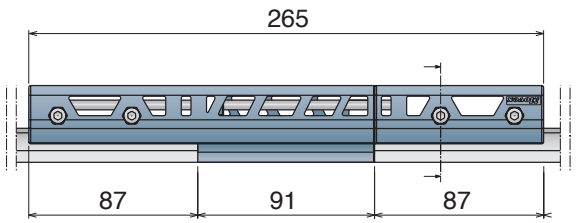

OPEN

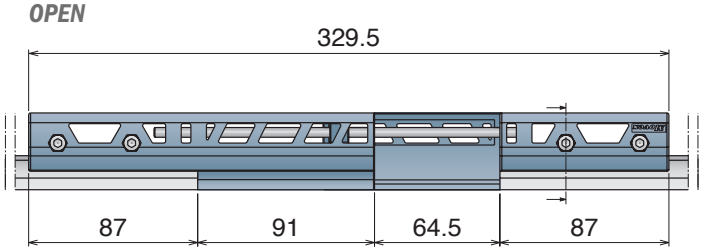

Materiale / *Material* / *Materialien:* Acciaio inox/*Stainless steel/Edelstahl*
Morsetti: PA/*Clamp: PA/Klemme: PA*
Vite, perno e rondelle: Acciaio inox/*Screw, pin and washer: Stainless steel/Schraube, Bolzen und Scheibe: Edelstahl*
Dado: ottone nichelato/Nut: nickel plated brass/Mutter: Messing vernickelt

394 Morsetto di giunzione
Joint clamp / Verbindungsplatte

Part	Article-Nr.	A	B	C	Specific
394	39401	81,5	9	18	used with part 135
394	39402	90	8	17	used with part 136

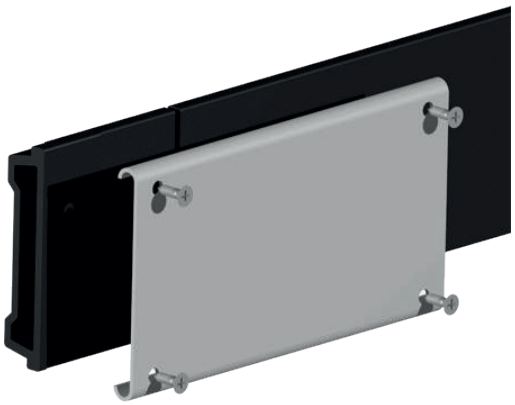



Used with Part 135
pag 335



Used with Part 136
pag 335

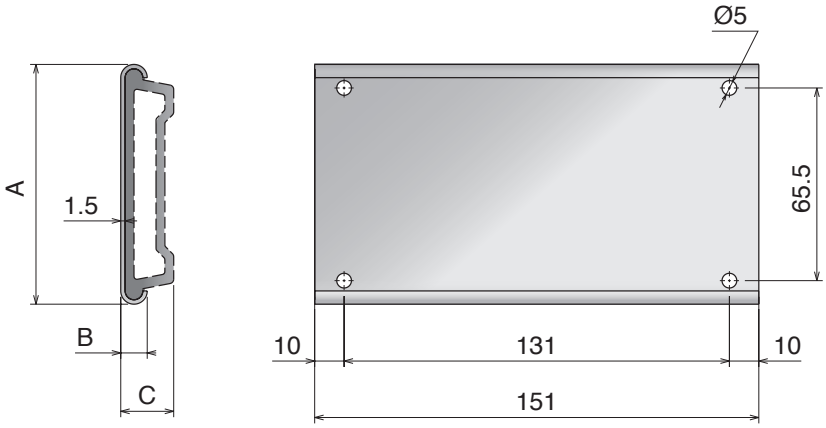

341 Morsetto
Clamp / Klemme

Part	Article-Nr.	ØA	Type
341	34101	without pin	A
341	34102	12	A
341	34103	16	A



Type A

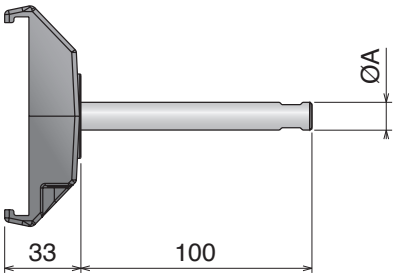



Used with Part 136
pag 335

Part	Article-Nr.	ØA	Type
341	34111	without pin	B
341	34112	12	B
341	34113	16	B



Type B

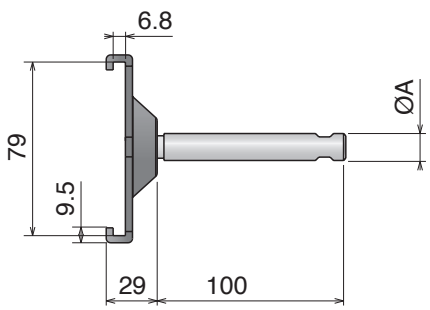



Used with Part 135
pag 335

Movex

331 Morsetto acciaio inox
Clamp, stainless steel / Klemme, Edelstahl

New

Part	Article-Nr.	ØA
331	33101	without pin
331	33102	12
331	33103	16



for straight application

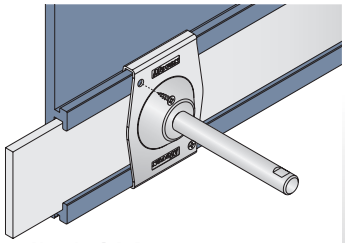

Used with Part
135/187/189/1056/1057

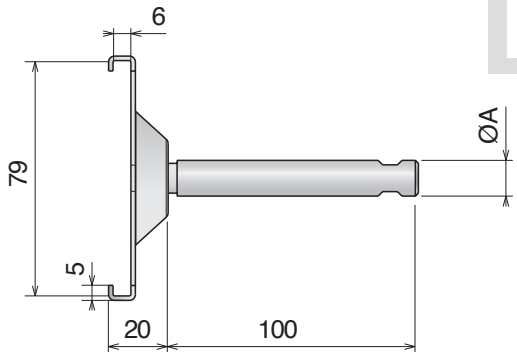

Morsetto acciaio inox
Clamp, for side guide / Klemme, Edelstahl

Part	Article-Nr.	ØA
331	33105	without pin
331	33106	12
331	33107	16



for curved application

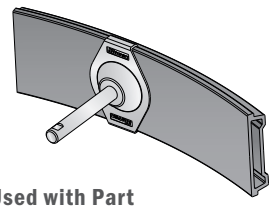

Used with Part
135/187/189/1056/1057

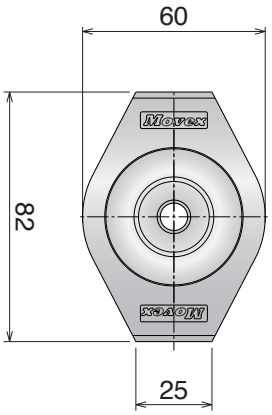

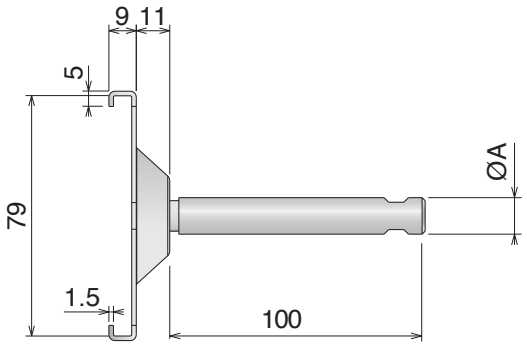

345 Morsetto acciaio inox
Clamp, stainless steel / Klemme, Edelstahl

Part	Article-Nr.	ØA
345	34501	without pin
345	34502	12
345	34503	16





Used with Part 136
pag 335

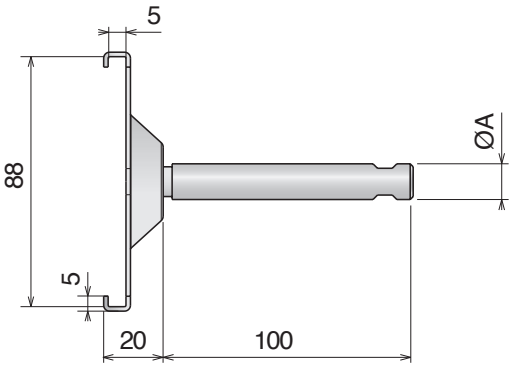

337 Morsetto singolo per tondino
Single clamp for round bar / Einfachklemme für Rund Profil

Part	Article-Nr.	ØA
337	33701	10
337	33702	12



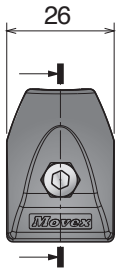

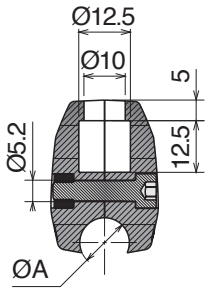

Pin design
pag 380

338 Morsetto singolo per tondino
Single clamp for round bar / Einfachklemme für Rund Profil

Part	Article-Nr.	ØA
338	33801	10
338	33802	12



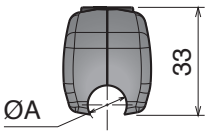

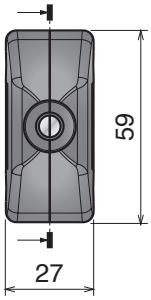

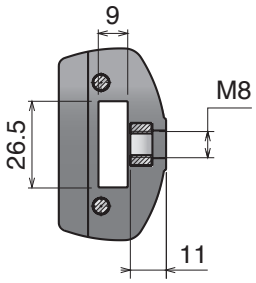

339 Morsetto doppio per tondino
Double clamp for round bar / Doppelklemme für Rund Profil

Part	Article-Nr.	ØA
339	33901	without pin
339	33902	12
339	33904	14
339	33903	16



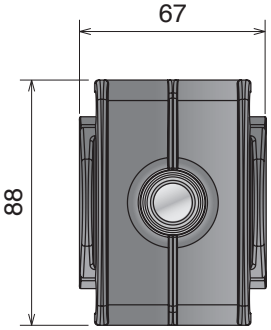

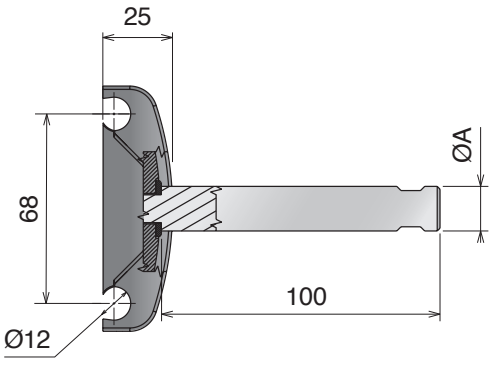

Materiale / *Material* / *Materialien:*
Acciaio inox / Stainless steel / Edelstahl

349 Perno
Rod / Bolzen





Part	Article-Nr.	A
349	34901	80
349	34902	100
349	34903	150

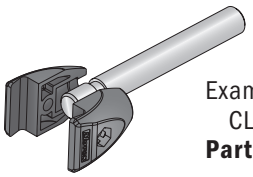

Example:
CLAMP
Part 324

350 Perno
Rod / Bolzen



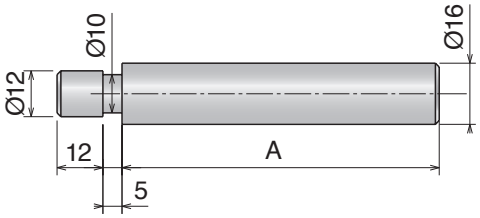

Part	Article-Nr.	A
350	35001	80
350	35002	100
350	35003	150

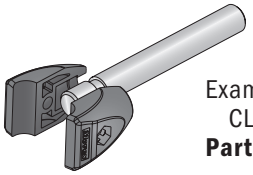

Example:
CLAMP
Part 337

351 Perno
Rod / Bolzen



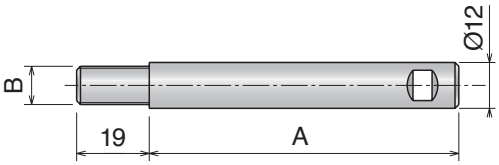

Part	Article-Nr.	A	B
351	35101	80	M10
351	35102	100	M10
351	35103	150	M10
351	35151	80	M8
351	35152	100	M8
351	35153	150	M8

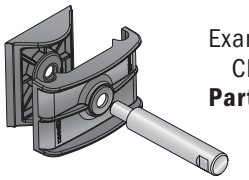

Example:
CLAMP
Part 339

352 Perno
Rod / Bolzen





Part	Article-Nr.	A	B
352	35201	80	M10
352	35202	100	M10
352	35203	150	M10
352	35251	80	M8
352	35252	100	M8
352	35253	150	M8

347 Perno filettato femmina
Rod / Bolzen



Part	Article-Nr.	A	B
347	34701	80	M10
347	34702	100	M10
347	34703	150	M10
347	34751	80	M8
347	34752	100	M8
347	34753	150	M8

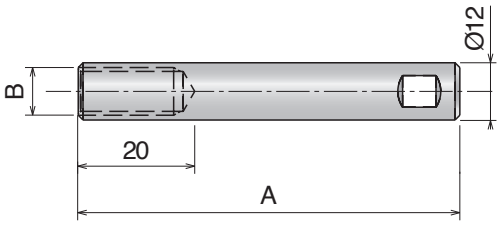

348 Perno filettato femmina
Rod / Bolzen



Part	Article-Nr.	A	B
348	34801	80	M10
348	34802	100	M10
348	34803	150	M10
348	34851	80	M8
348	34852	100	M8
348	34853	150	M8

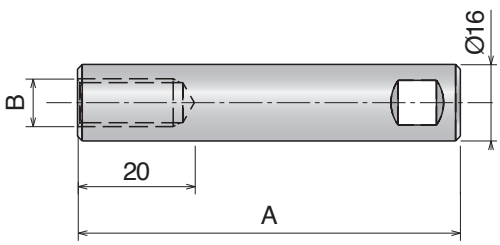

Materiale / *Material* / *Materialien:*
Acciaio inox / Stainless steel / Edelstahl

346 Snodo
Joint rod adapter / Gelenk

Part	Article-Nr.	A	B	C
346	34601	M8	M8	19
346	34602	M8	M10	19
346	34603	M10	M10	19
346	34699	M8	M8	16



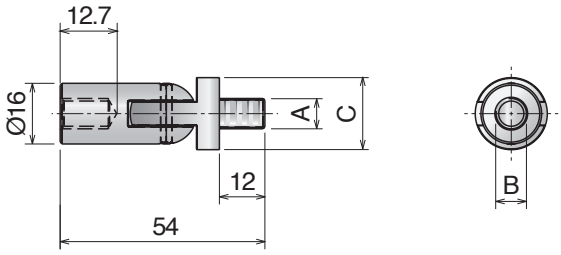

356 Perno snodato
Jointed rods / Gelenkbolzen

Part	Article-Nr.	A
356	35601	80
356	35602	100
356	35603	150



Use with bracket
Part 324-337

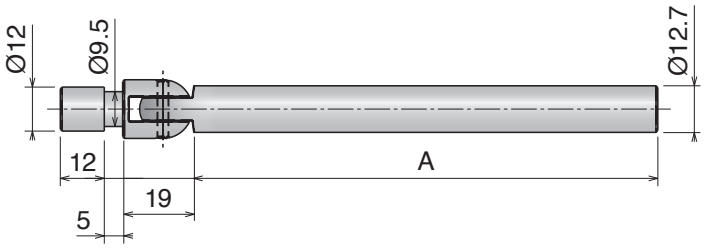

357 Perno snodato
Jointed rods / Gelenkbolzen

Part	Article-Nr.	A
357	35701	80
357	35702	100
357	35703	150



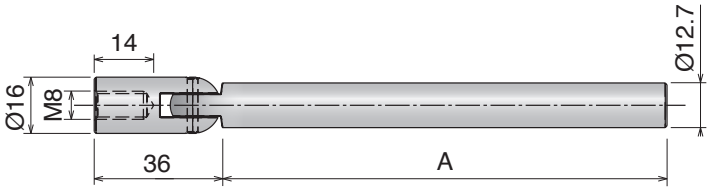

Materiale / *Material* / *Materialien:*
Polietilene HMW-PE/*Polyethylene HMW-PE/Polyethylen HMW-PE*
Rulli: resina acetalica o gomma SEBS/Rollers: Acetal Resin or SEBS rubber/Röllchen: Azetal oder SEBS gummi

335 Guide a rulli laterale
Roller guides / Röllchenführung

New Patented **New**

Max fixing load M8 screw: 15 N/m

Type A



Part	Article-Nr.	Type
335	33502	A

Type B



Part	Article-Nr.	Type
335	33504	B

Type B1

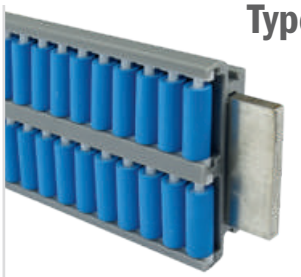

Part	Article-Nr.	Type
335	33506	B1

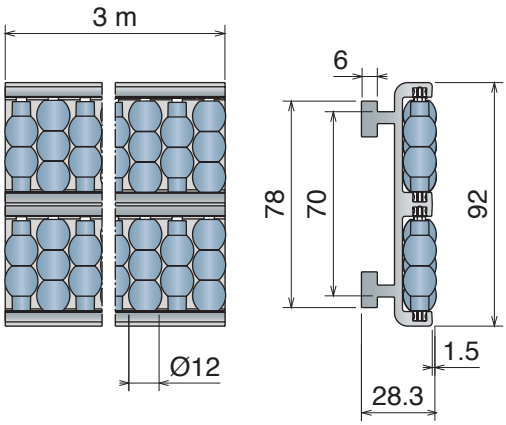

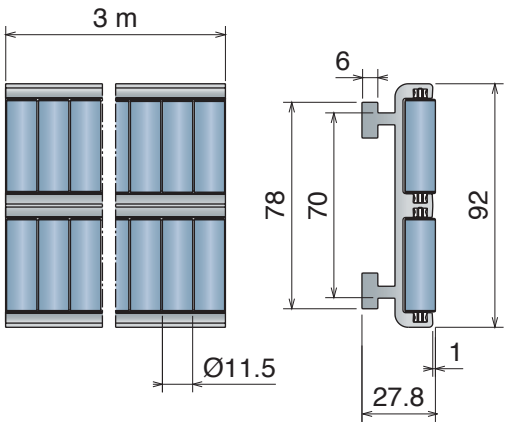



Soft roller
SEBS rubber

Advantages:

- **Noise reduction**
- **Improved product stability**

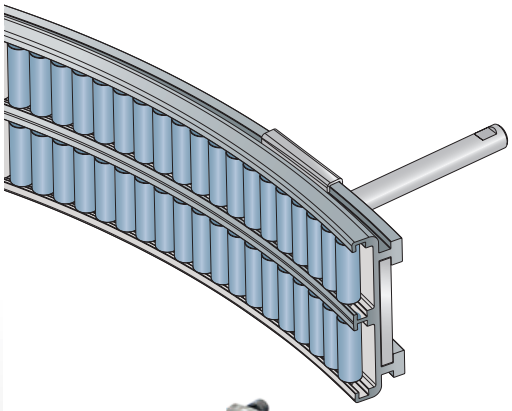

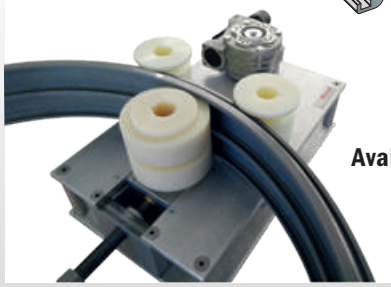

Available roller for bending machine

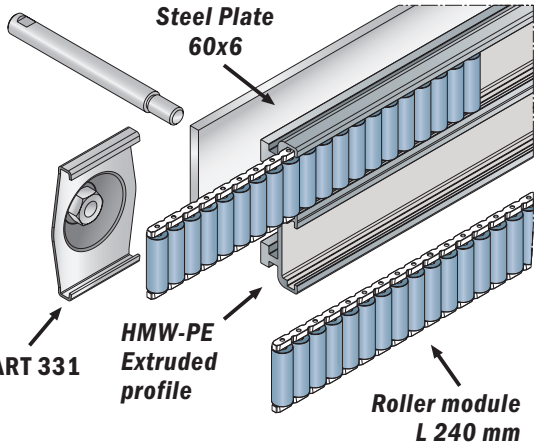

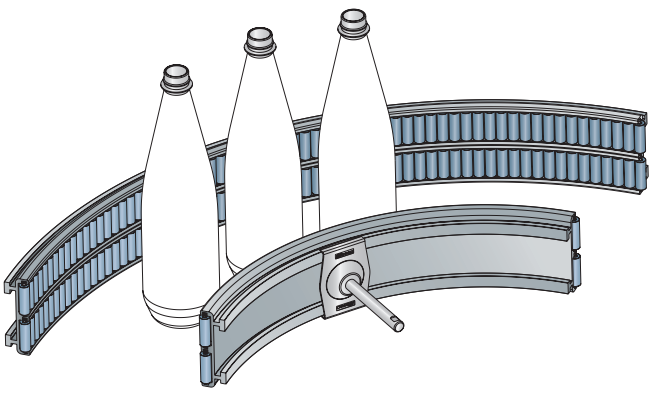

Materiale / *Material / Materialien:*
Guida: alluminio anodizzato/*Guide: anodized aluminum/Führung: eloxiertem Aluminium*
Rulli: resina acetalica o gomma SEBS/*Rollers: Acetal Resin or SEBS rubber /Röllchen: Azetal oder SEBS gummi*
Vite: Acciaio inox Screw: Stainless steel Schrauben: Edelstahl

358 Guide a rulli laterale
Roller guides / Röllchenführung

Max fixing load M8 screw: 15 N/m

Type A



Part	Article-Nr.	Type
358	35802	A

Type B



Part	Article-Nr.	Type
358	35804	B

Type B1



Part	Article-Nr.	Type
358	35806	B1

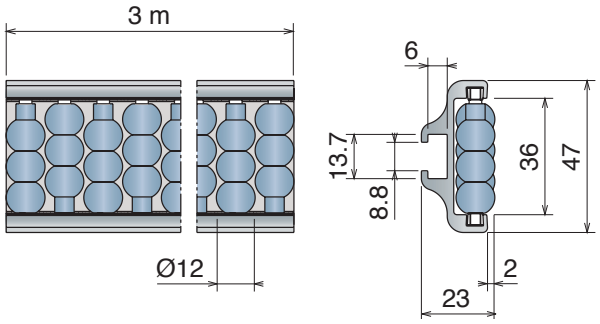

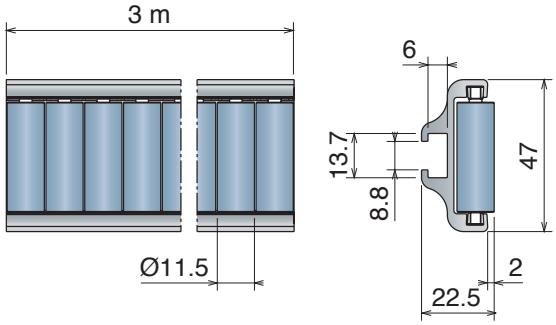



Soft roller
SEBS rubber

Roller
pag 322-323



Fixing screw:
M8 hex.head
or **PART 362**



Puntale / *Shoe / Einlaufschuh*

Part	Article-Nr.	Type
364	36401	fresato/machined/gefräst



Discover more options:
Pag 390/391

Materiale / *Material / Materialien:*
Guida: alluminio anodizzato/*Guide: anodized aluminum/Führung: eloxiertem Aluminium*
Rulli: resina acetalica o gomma SEBS/*Rollers: Acetal Resin or SEBS rubber /Röllchen: Azetal oder SEBS gummi*
Vite: Acciaio inox Screw: Stainless steel Schrauben: Edelstahl

359 Guide a rulli laterale
Roller guides / Röllchenführung

Max fixing load M8 screw: 15 N/m

Type A



Part	Article-Nr.	Type
359	35902	A

Type B



Part	Article-Nr.	Type
359	35904	B

Type B1



Part	Article-Nr.	Type
359	35906	B1

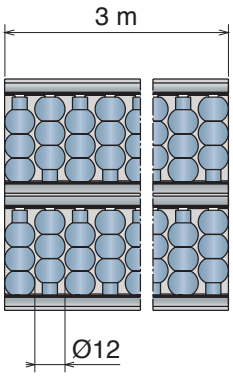

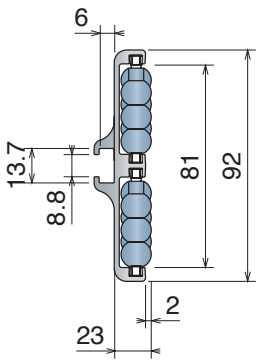

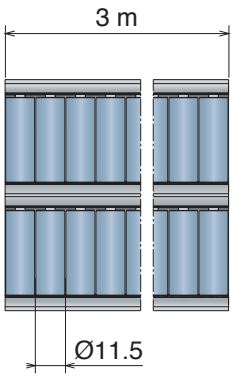

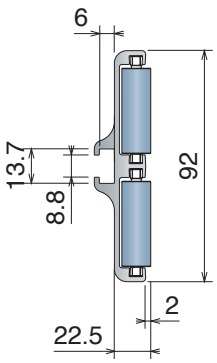



Soft roller
SEBS rubber

Roller
pag 322-323



Fixing screw:
M8 hex.head
or **PART 362**



Puntale / *Shoe / Einlaufschuh*

Part	Article-Nr.	Type
365	36501	fresato/machined/gefräst



Discover more options:
Pag 390/391

Materiale / *Material / Materialien:*
Guida: alluminio anodizzato/*Guide: anodized aluminum/Führung: eloxiertem Aluminium*
Rulli: resina acetalica o gomma SEBS/*Rollers: Acetal Resin or SEBS rubber /Röllchen: Azetal oder SEBS gummi*

360 Guide a rulli intermedia
Roller guides / Röllchenführung

Max fixing load M8 screw: 15 N/m

Type A



Part	Article-Nr.	Type
360	36002	A

Type B



Part	Article-Nr.	Type
360	36004	B

Type B1



Part	Article-Nr.	Type
360	36006	B1

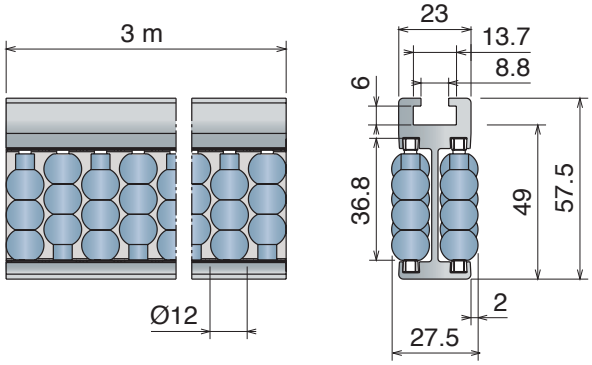



Soft roller
SEBS rubber

Roller
pag 322-323



Fixing screw:
M8 hex.head
or **PART 362**



Puntale / *Shoe / Einlaufschuh*

Part	Article-Nr.	Type
366	36601	fresato/machined/gefräst



Discover more options:
Pag 390/391

360 Guide a rulli intermedia
Roller guides / Röllchenführung

Reinforced Version **New**

Max fixing load M8 screw: 15 N/m

Type A

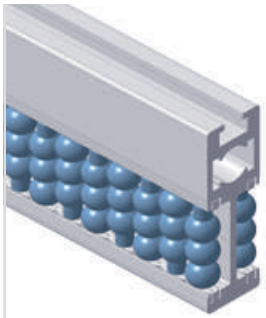

Part	Article-Nr.	Type
360	36012	A

Type B



Part	Article-Nr.	Type
360	36014	B

Type B1



Part	Article-Nr.	Type
360	36016	B1

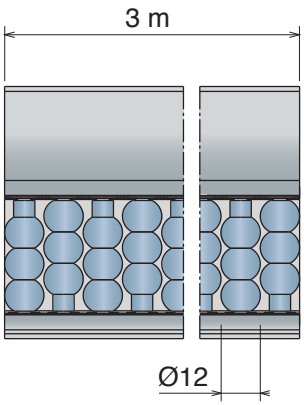

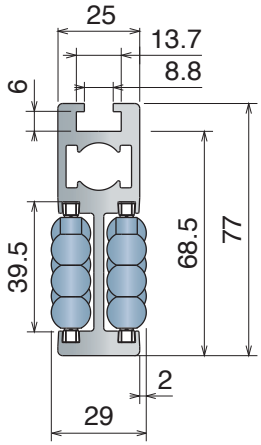

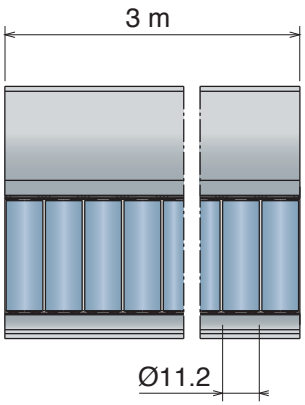

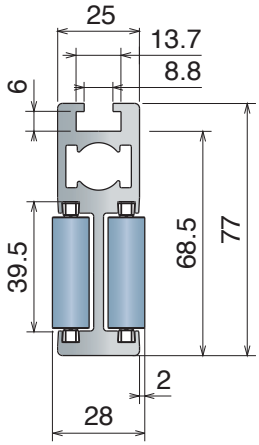



Soft roller
SEBS rubber

Roller
pag 322-323



Fixing screw:
M8 hex.head
or **PART 362**



Puntale / *Shoe / Einlaufschuh*



Part	Article-Nr.	Type
366	36601	fresato/machined/gefräst

Discover more options: Pag 390/391

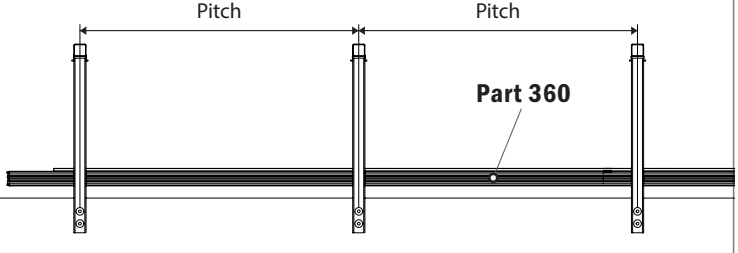

Part. 360 Reinforced version is a reliable roller guides solution, the new robust design permits less support elements and allows higher pitches.

Example of application

Materiale / *Material / Materialien:*
Guida: alluminio anodizzato/*Guide: anodized aluminum/Führung: eloxiertem Aluminium*
Rulli: resina acetalica o gomma SEBS/*Rollers: Acetal Resin or SEBS rubber /Röllchen: Azetal oder SEBS gummi*

361 Guide a rulli intermedia
Roller guides / Röllchenführung

Max fixing load M8 screw: 15 N/m

Type A



Part	Article-Nr.	Type
361	36102	A

Type B



Part	Article-Nr.	Type
361	36104	B

Type B1



Part	Article-Nr.	Type
361	36106	B1

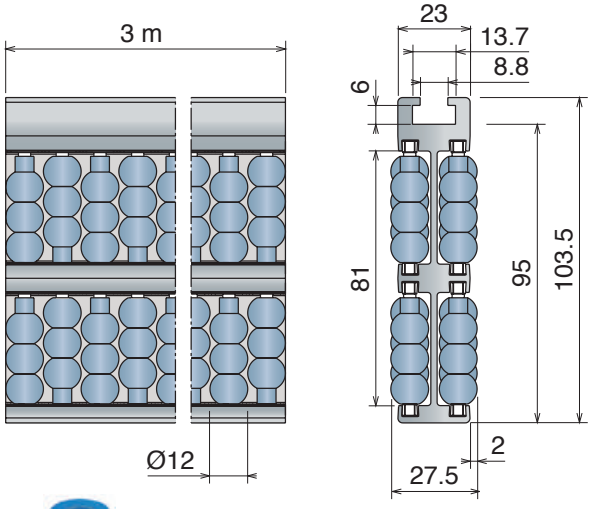



Soft roller
SEBS rubber

Roller
pag 322-323



Fixing screw:
M8 hex.head
or **PART 362**



Puntale / *Shoe / Einlaufschuh*

Part	Article-Nr.	Type
367	36701	fresato/machined/gefräst



Discover more options:
Pag 390/391

Movex

361 Guide a rulli intermedia
Roller guides / Röllchenführung

Reinforced Version **New**

Max fixing load M8 screw: 15 N/m

Type A

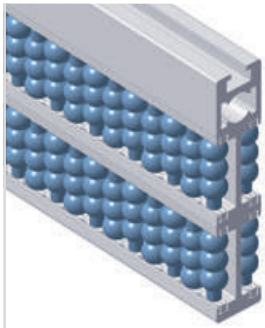

Part	Article-Nr.	Type
361	36112	A

Type B



Part	Article-Nr.	Type
361	36114	B

Type B1

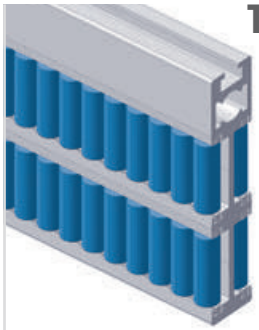

Part	Article-Nr.	Type
361	36116	B1

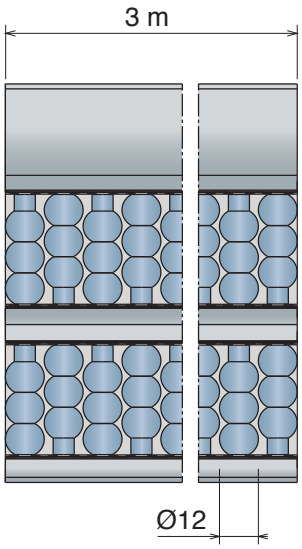

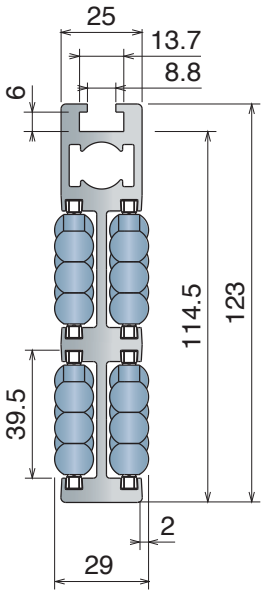

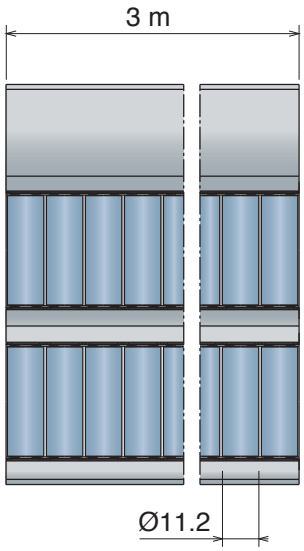

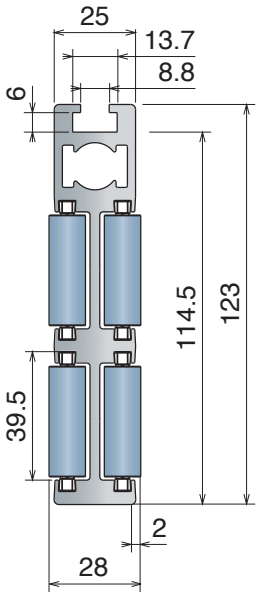



Soft roller
SEBS rubber

Roller
pag 322-323



Fixing screw:
M8 hex.head
or **PART 362**



Puntale / *Shoe / Einlaufschuh*



Part	Article-Nr.	Type
367	36701	fresato/machined/gefräst

Discover more options: Pag 390/391

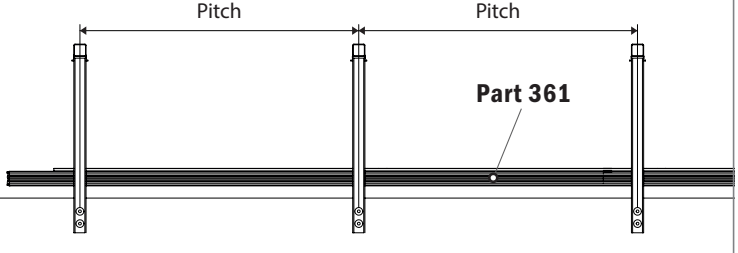

Part. 361 Reinforced version is a reliable roller guides solution, the new robust design permits less support elements and allows higher pitches.

Example of application

Materiale / *Material* / *Materialien:*
Rulli: Resina acetalica / *Rollers: Acetal Resin / Röllchen: Azetal*
Grano: Acciaio inox/Grub Screws: Stainless steel/Gewindestift: Edelstahl
Dadi: ottone nichelato/Nuts: nickel plated brass/Mutter: Messing vernickelt

364 Puntale
Shoe / Einlaufschuh

New

Part. 364 it is designed to allow the possibility to shorten it, if necessary.

Part	Article-Nr.	Grub screw
364	36411	M6

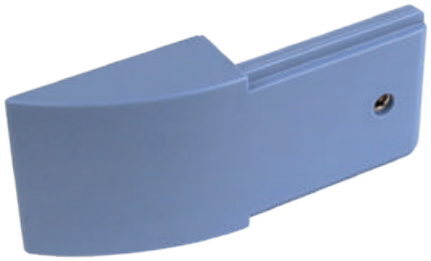

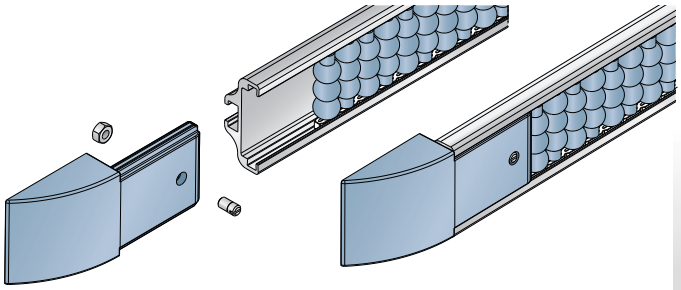

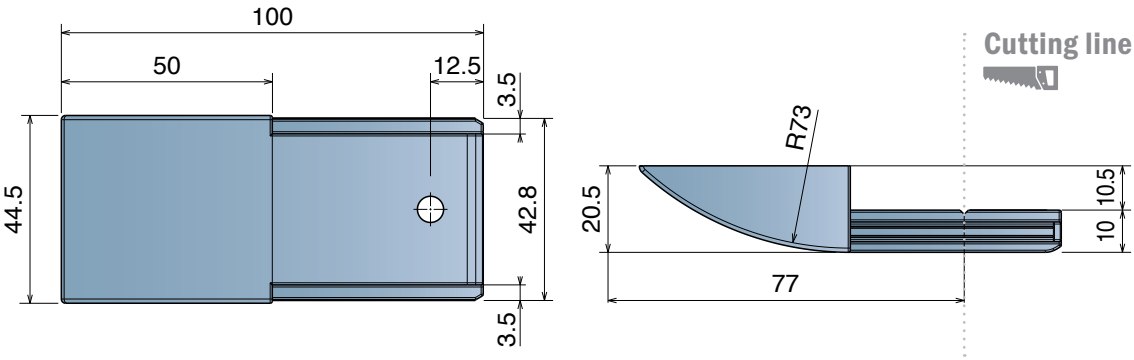

365 Puntale
Shoe / Einlaufschuh

Part. 365 it is designed to allow the possibility to shorten it, if necessary.

Part	Article-Nr.	Grub screw
365	36511	M6



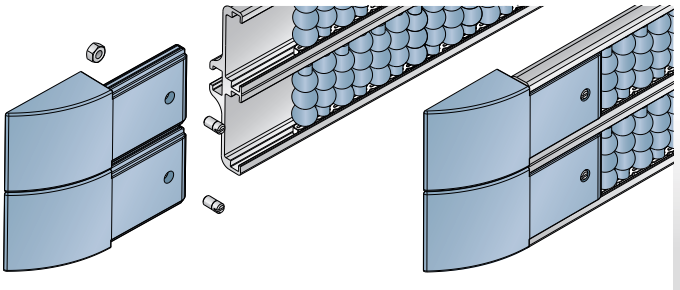

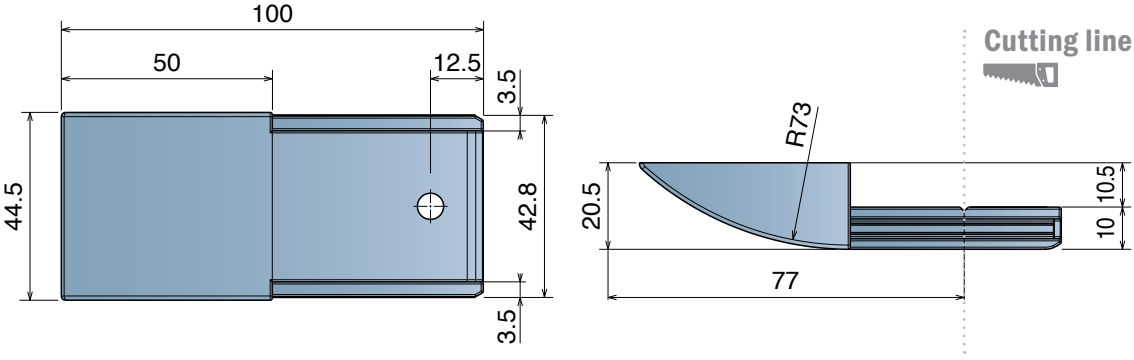

Materiale / *Material* / *Materialien:*
Rulli: Resina acetalica / *Rollers: Acetal Resin / Röllchen: Azetal*
Grano: Acciaio inox/Grub Screws: Stainless steel/Gewindestift: Edelstahl
Dadi: ottone nichelato/Nuts: nickel plated brass/Mutter: Messing vernickelt

366 Puntale
Shoe / Einlaufschuh

New

Part. 366 it is designed to allow the possibility to shorten it, if necessary.

Part	Article-Nr.	Grub screw
364	36611	M6



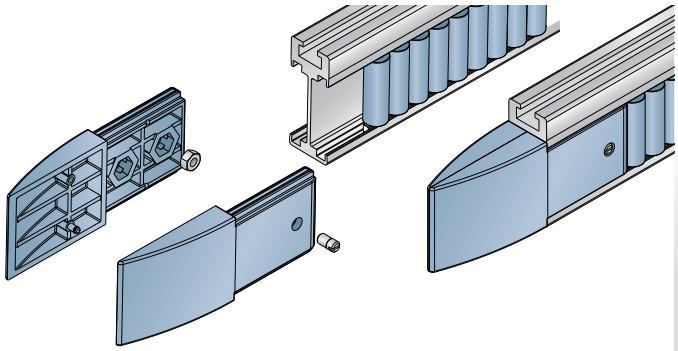

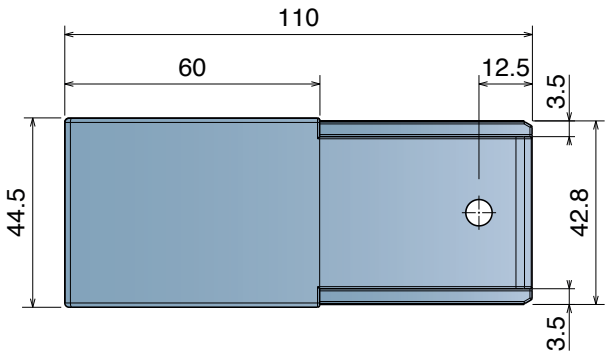

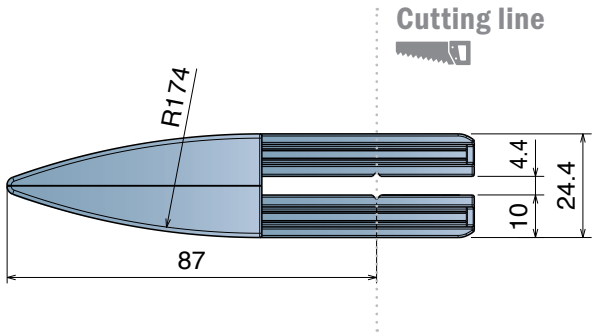

367 Puntale
Shoe / Einlaufschuh

Part. 367 it is designed to allow the possibility to shorten it, if necessary.

Part	Article-Nr.	Grub screw
365	36711	M6



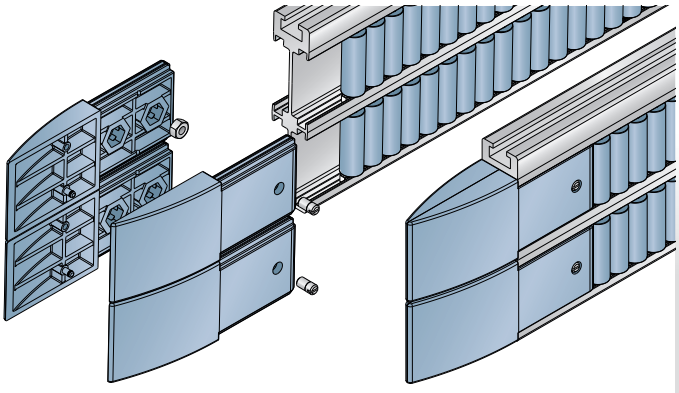

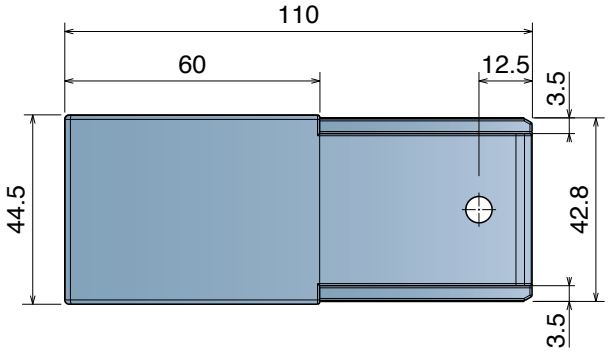

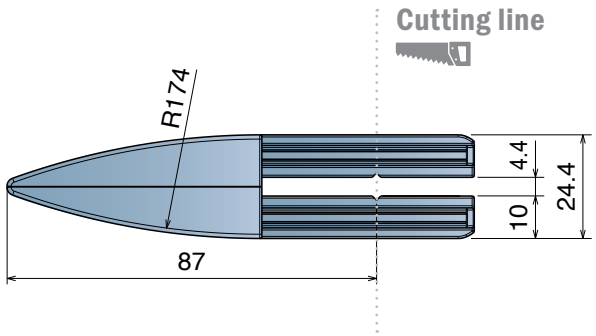

Materiale / *Material* / *Materialien:* Puntale: PE HD/*Shoe: PE HD/Corpus: PE HD*
Perni: acciaio inox/*Pins: SS/Bolzen: Edelstahl*
Rulli: resina acetalica o gomma SEBS/*Rollers: Acetal Resin or SEBS rubber*
Röllchen: Azetal oder SEBS gummi

366 Puntale centrale a rulli
Central roller shoe / Einlaufschuh mitting

Patented

Part	Article-Nr.	Type
366	36621	A
366	36622	B
366	36623	B1





Type B1
Soft roller
SEBS rubber

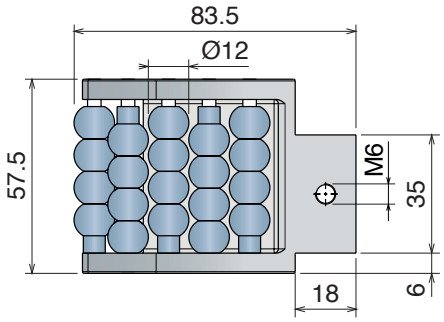

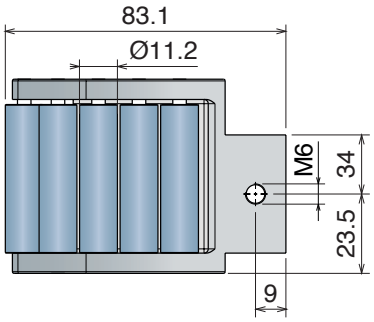

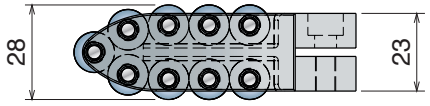

Type A

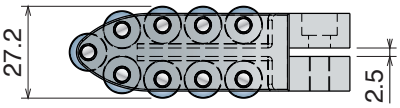

Type B

367 Puntale centrale a rulli
Central roller shoe / Einlaufschuh mitting

Patented

Part	Article-Nr.	Type
367	36721	A
367	36722	B
367	36723	B1





Type B1
Soft roller
SEBS rubber

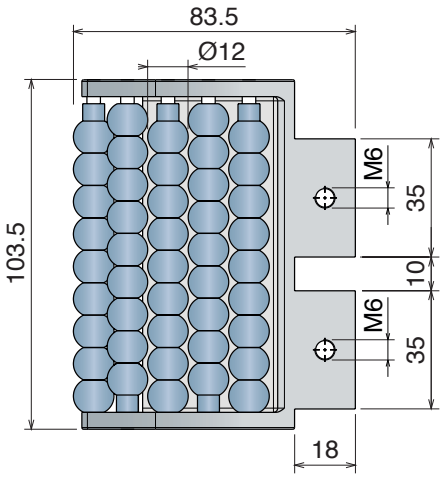

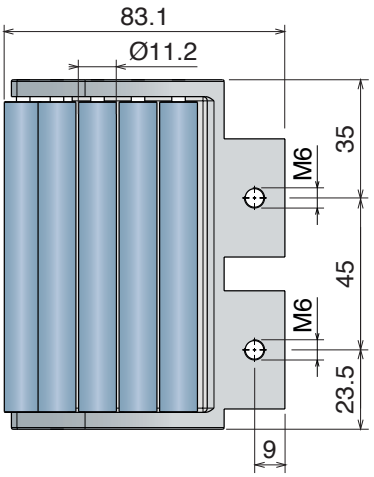

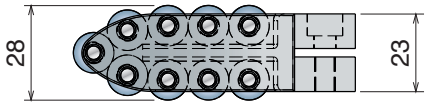

Type A

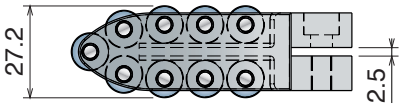

Type B

364 Puntale laterale a rulli
Side roller shoe / Einlaufschuh seitlich

Patented

Part	Article-Nr.	Type
364	36421	A
364	36422	B
364	36423	B1





Type B1
Soft roller
SEBS rubber

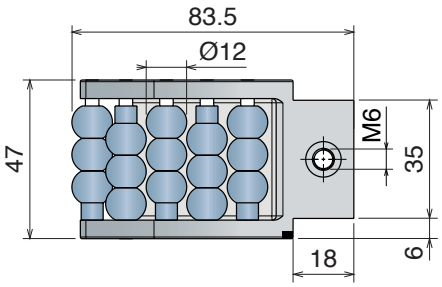

Type A

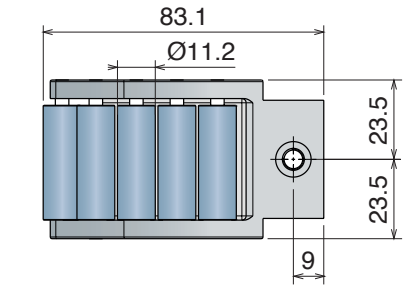

Type B

365 Puntale laterale a rulli
Side roller shoe / Einlaufschuh seitlich

Patented

Part	Article-Nr.	Type
365	36521	A
365	36522	B
365	36523	B1





Type B1
Soft roller
SEBS rubber

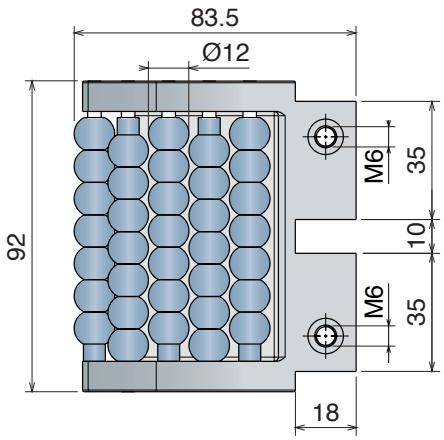

Type A

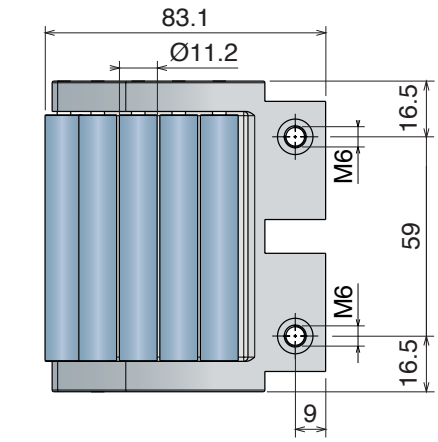

Type B

Materiale / *Material* / *Materialien:* Profilo: PE/*Profile: PE/Profil: PE*
Guide: Alluminio/*Guides: Aluminum/Führungen: Aluminium*
Elemento di giunzione: Acciaio inox /*Connecting elements: stainless steel*
Verbindungselement: Edelstahl

395 Guida laterale in PE
PE side guides / Seitenführung in PE

Part	Article-Nr.	L
395	39501	3 m

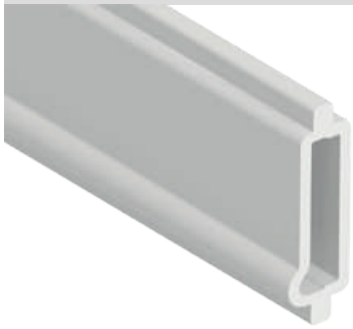

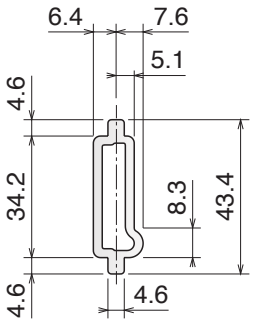

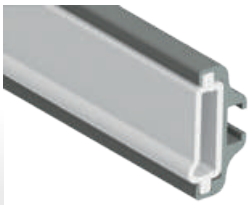

362 Vite a "T"
T-bolt / T-Schraube

Part	Article-Nr.	A
362	36201	16
362	36202	19
362	36203	25



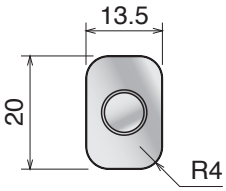

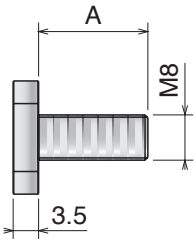

358 Guide in alluminio
Aluminum guides / Aluminiumführung

Part	Article-Nr.	Version	Min. radius	L
358	35800	Single-lateral	250	3 m
359	35900	Double-lateral	500	3 m
360	36000	Single-central	500	3 m
361	36100	Double-central	750	3 m

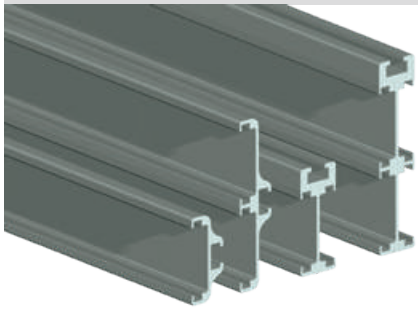

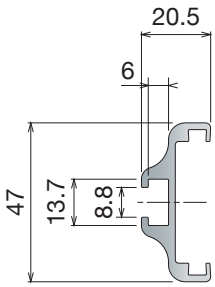

35800

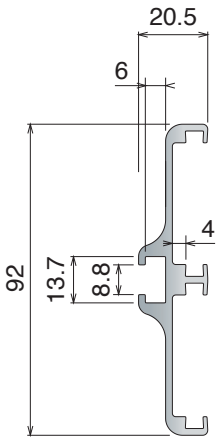

35900

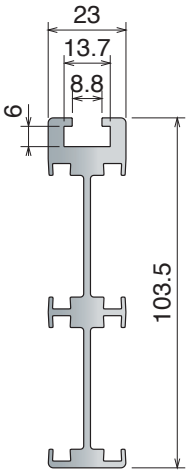

36100

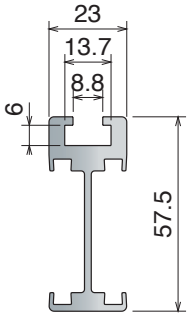

36000

333 Elemento di giunzione
Connecting elements / Verbindungselement

Part	Article-Nr.
333	33301

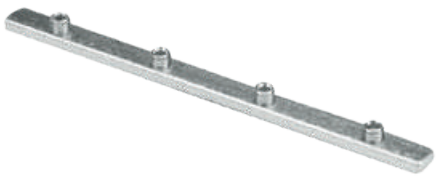

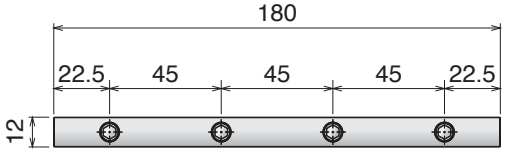

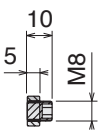

353 Guide a rulli di accumulo
Accumulation roller guides / Stauröllchenführung

Part	Article-Nr.	A	Pin	Pin Ø
353	35301	1 m	PA	6 mm
353	35302	2 m	PA	6 mm
353	35303	3 m	PA	6 mm



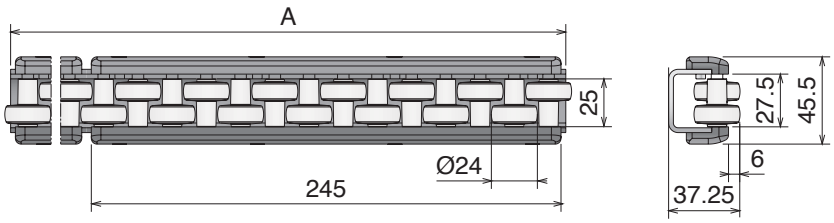

354 Guide a rulli di accumulo
Accumulation roller guides / Stauröllchenführung

Part	Article-Nr.	A	Pin	Pin Ø
354	35401	1 m	PA	6 mm
354	35402	2 m	PA	6 mm
354	35403	3 m	PA	6 mm



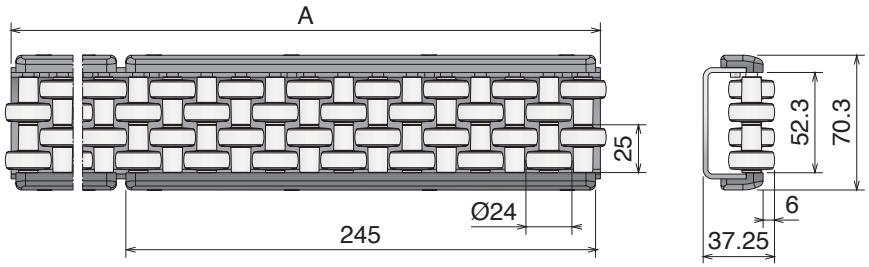

355 Guide a rulli di accumulo
Accumulation roller guides / Stauröllchenführung

Part	Article-Nr.	A	Pin	Pin Ø
355	35501	1 m	SS	6 mm
355	35502	2 m	SS	6 mm
355	35503	3 m	SS	6 mm



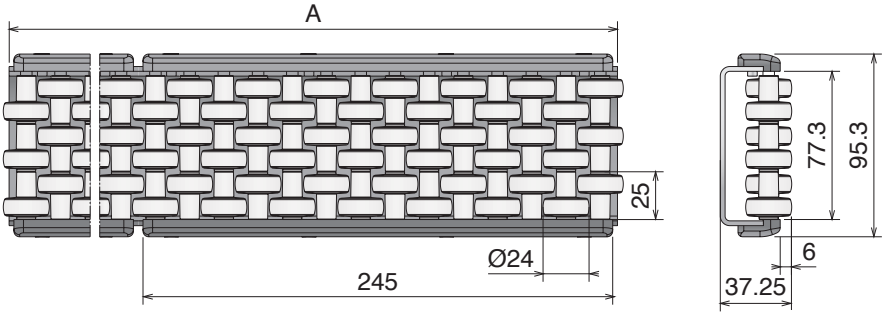

Materiale / *Material* / *Materialien:*
Resina acetalica / *Acetal Resin* / *Azetal*

363 Guida a rulli flessibile
Flexible roller guide / Flexible Röllchenführung

Part	Article-Nr.	Type	A
363	36301	A	8
363	36302	B	8
363	36303	A	10
363	36304	B	10

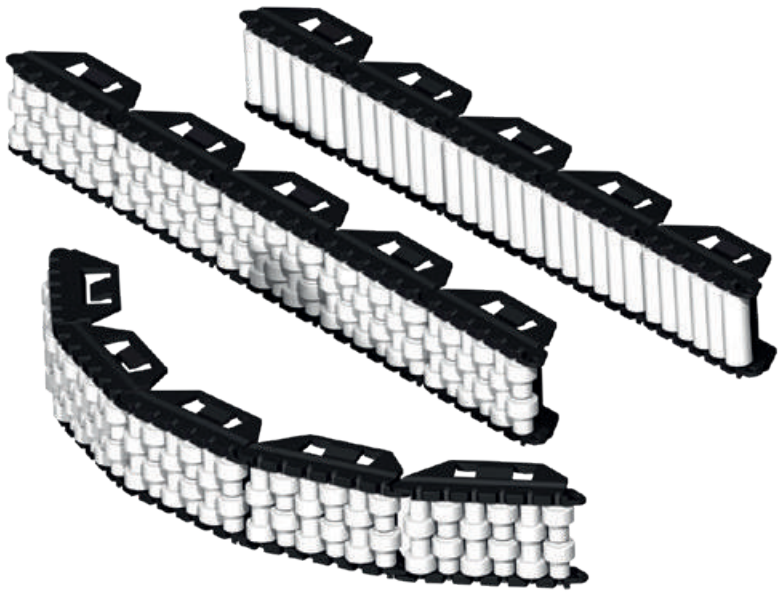

Advantages:

- Noise reduction
- Improved product stability

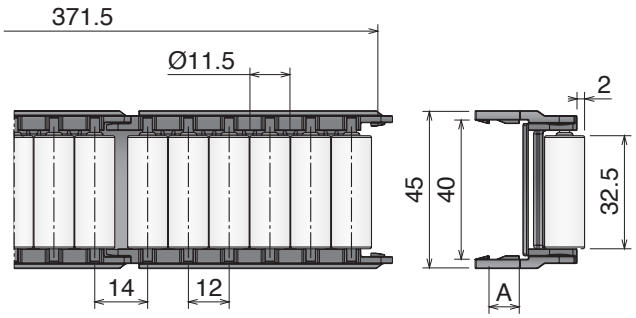

Type A

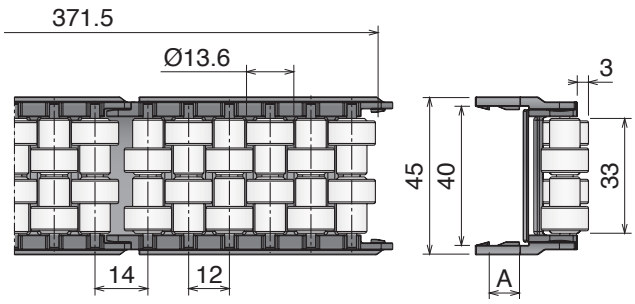

Type B

Curvature radius

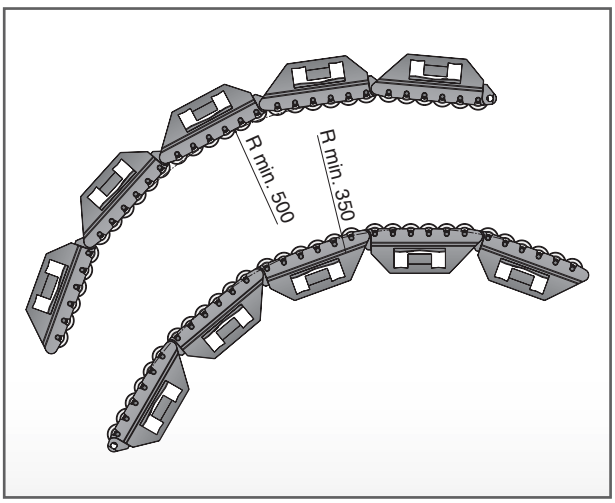

Fixing with plate and metal profile

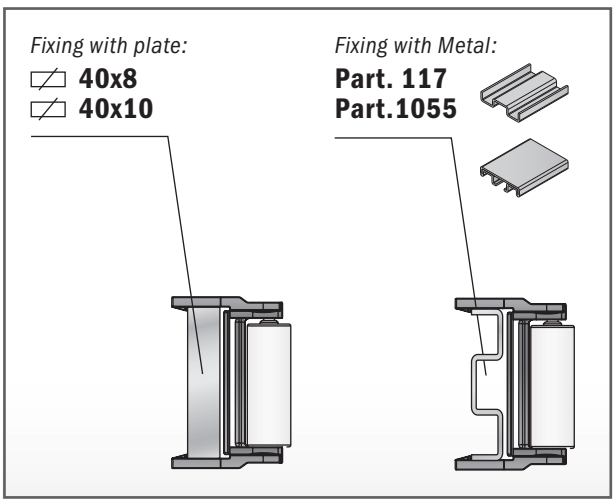

396 Guida a rulli flessibile
Flexible roller guide / Flexible Röllchenführung

Part	Article-Nr.	Type
396	39601	A
396	39602	B

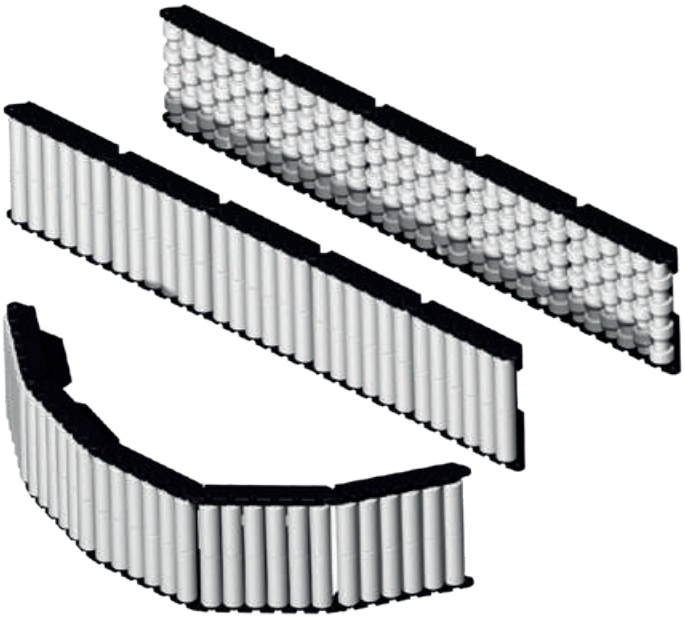

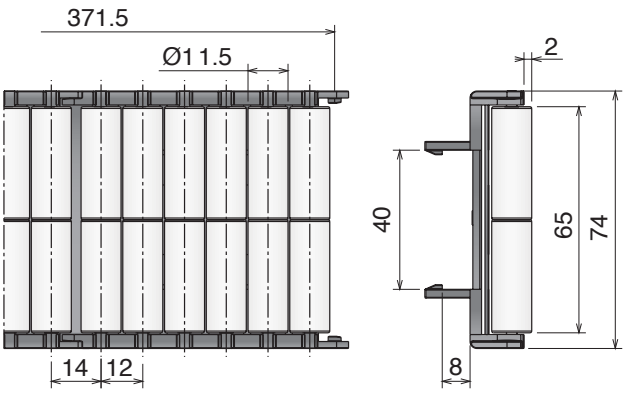

Type A

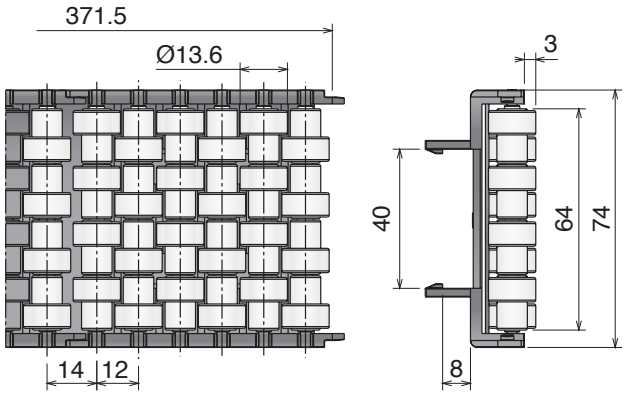

Type B

Curvature radius

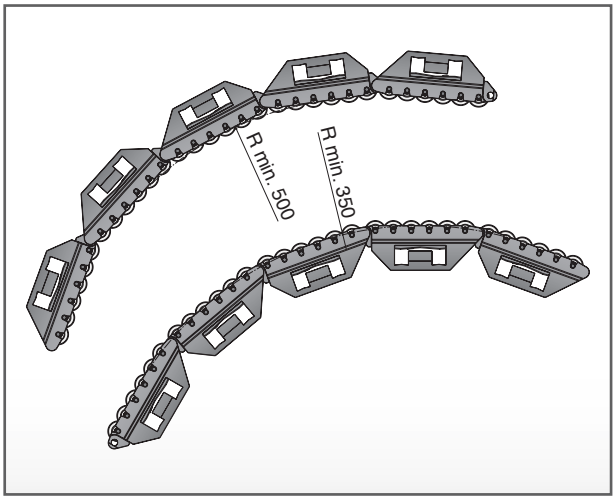

Fixing with plate and metal profile

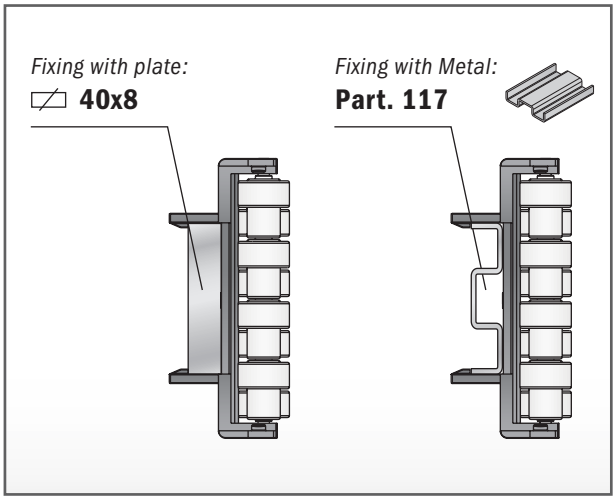

Materiale / *Material* / *Materialien:*
Resina acetalica / *Acetal Resin* / *Azetal*

363 Guida a rulli flessibile (centrale)
Flexible roller guide (Centre) / Flexible Röllchenführung (Zentral)

Part	Article-Nr.	Type	for plate
363	36313	A	40x8
363	36311	A	40x10
363	36314	B	40x8
363	36312	B	40x10



Type A

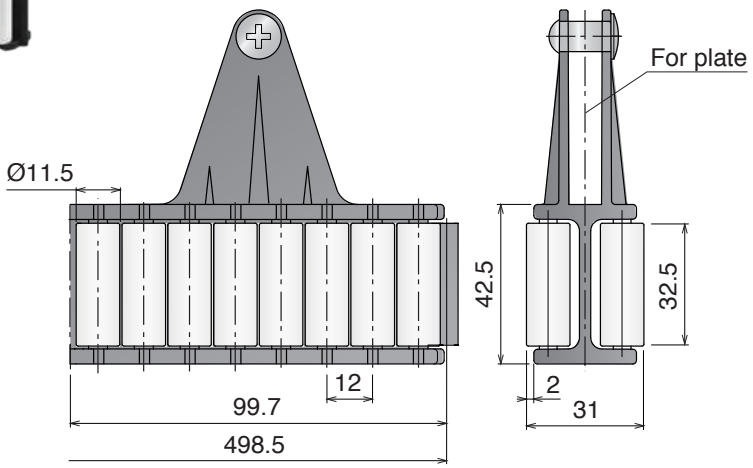

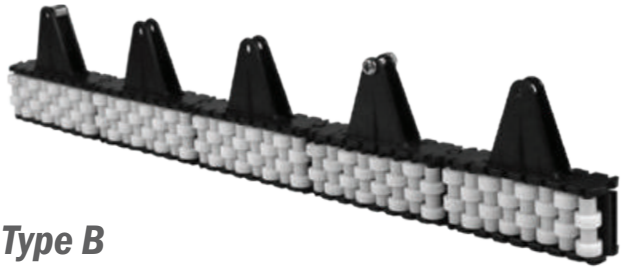

Type B

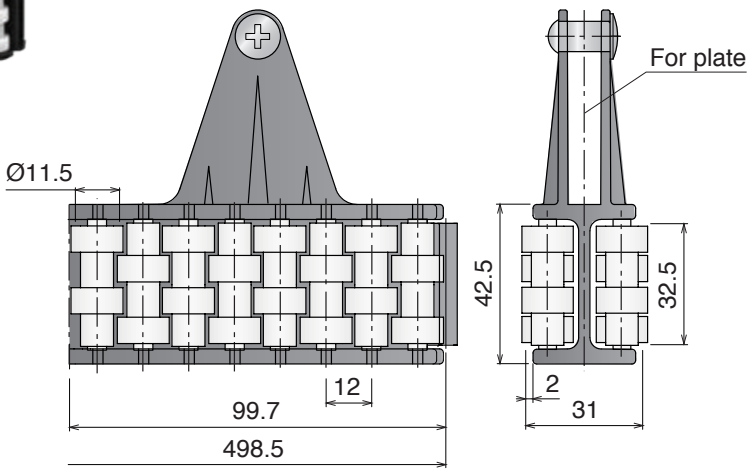

Puntale / *Shoe / Einlaufschuh*

Part	Article-Nr.	For Type
363	36399	A & B



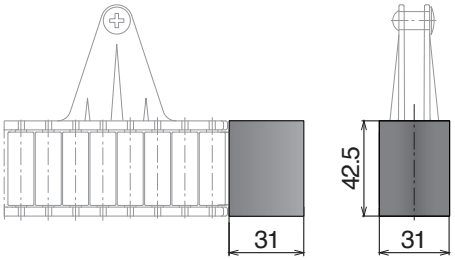

Use with
Flexible roller guide
(Central version)
Part 363

199 Blocco di montaggio catena
Chain mounting block / Kettenmontageblock

Part	Article-Nr.	A	B	C
199	19980	45	80	40
199	19981	60	100	55
199	19982	45	80	40



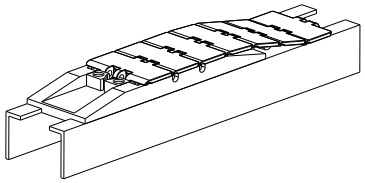

Chain mounting block application

19980
Chain mounting block for series:

Steel chain:	*Plastic chain:*
812/815 (GT)	820 (GT)
881 M (GT)	831

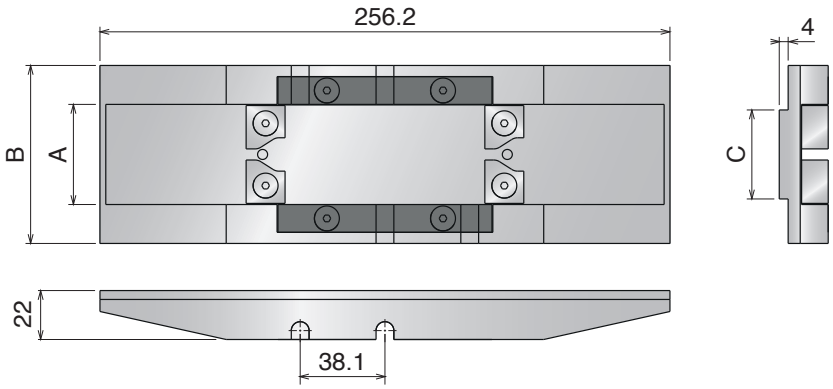

19981
Chain mounting block for series:

Steel chain:	*Plastic chain:*
8157 (GT)	8257 (GT/LBP)
8857 M (GT/LBP)	8857 (GT/LBP)
	882 Bevel

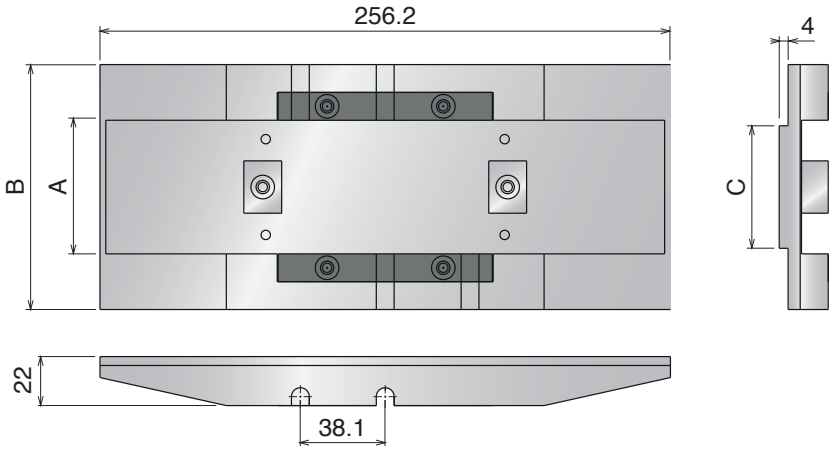

19982
Chain mounting block for series:

Steel chain:	*Plastic chain:*
812/815 (GT)	828 (GT/LBP)
881 M (GT)	880 M
	880 Bevel
	879 M
	879 Bevel

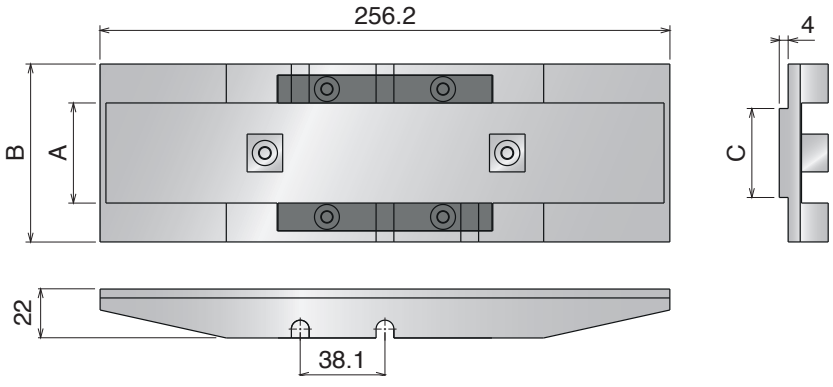

Materiale / *Material* / *Materialien:* Modulo: resina acetalica/*Moduls: acetal resin/Module: Azetal*
Perni, viti e dadi: Acciaio inox/*Pins, screws and nuts: Stainless steel/Bolzen, Schraube und Mutter: Edelstahl*
Rulli: resina acetalica o acciaio inox/*Rollers: acetal resin or stainless steel/Rolle: Azetal oder Edelstahl*

368 Moduli di trasferimento L=85 mm

Transfer modules L=85 mm / Überschubmodul L=85 mm



Part	Article-Nr.	Type	Roller material
368	36801	A	Acetal resin
368	36802	B	Acetal resin
368	36803	C	Acetal resin
368	36801SS	A	Stainless steel
368	36802SS	B	Stainless steel
368	36803SS	C	Stainless steel



Smart Roll
with mini bearing in stainless steel

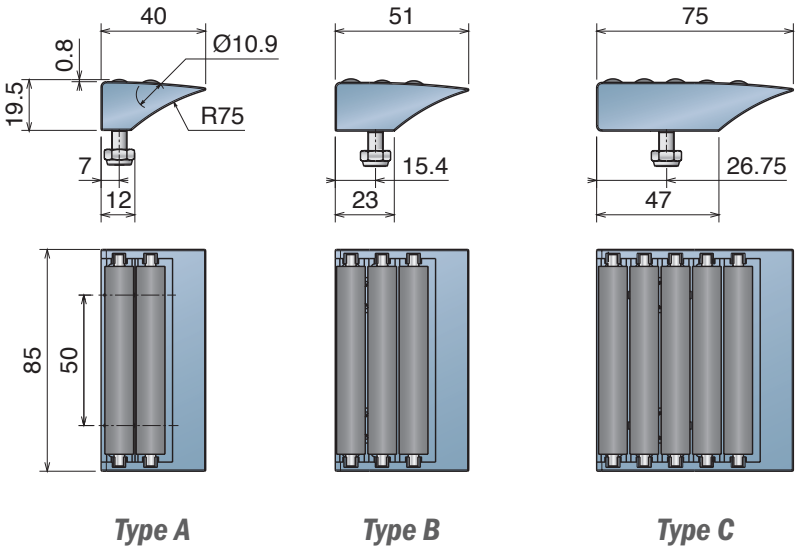

Type A ***Type B*** ***Type C***

369 Moduli di trasferimento L=115 mm

Transfer modules L=115 mm / Überschubmodul L=115 mm

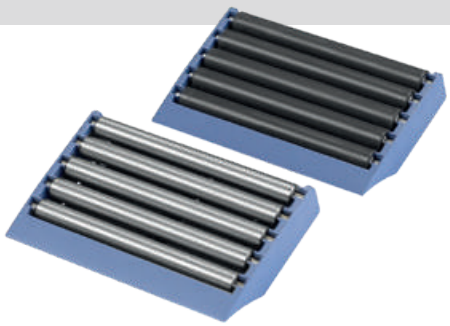

Part	Article-Nr.	Type	Roller material
369	36901	A	Acetal resin
369	36902	B	Acetal resin
369	36903	C	Acetal resin
369	36901SS	A	Stainless steel
369	36902SS	B	Stainless steel
369	36903SS	C	Stainless steel



Smart Roll
with mini bearing in stainless steel

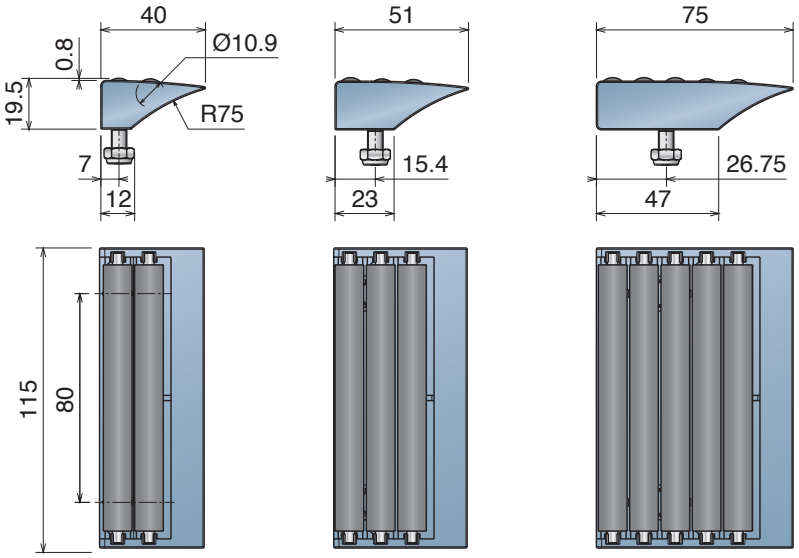

Type A ***Type B*** ***Type C***

370 Moduli di trasferimento L=85 mm
Transfer modules L=85 mm / Überschubmodul L=85 mm

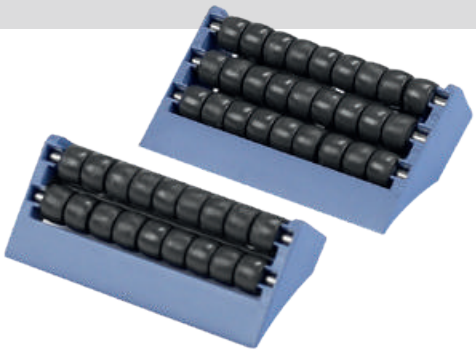

Part	Article-Nr.	Type
370	37001	A
370	37002	B
370	37003	C

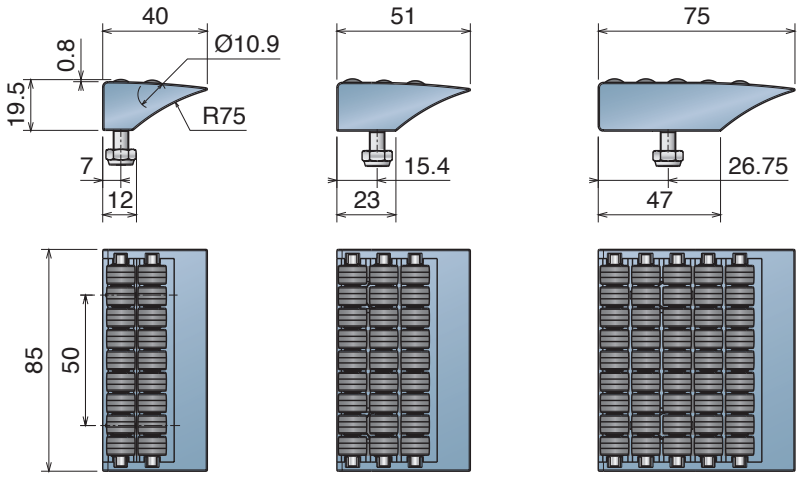

Type A *Type B* *Type C*

371 Moduli di trasferimento L=115 mm
Transfer modules L=115 mm / Überschubmodul L=115 mm

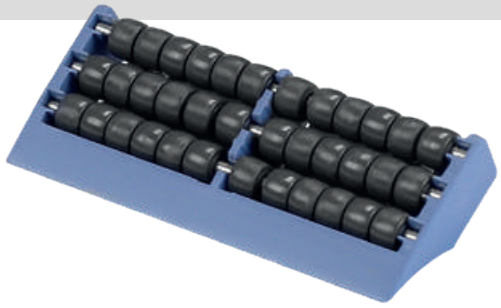

Part	Article-Nr.	Type
371	37101	A
371	37102	B
371	37103	C

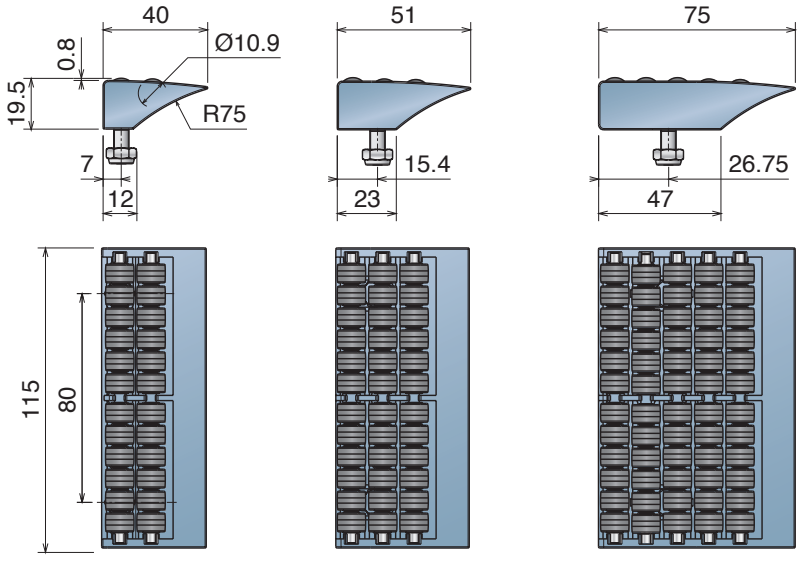

Type A *Type B* *Type C*

Materiale / *Material* / *Materialien:*
Cerniera: Poliammide/Hinges: Polyamide/Scharnier: Polyamid
Perni: Acciaio inox/Pins: Stainless steel/Bolzen: Edelstahl

372 Cerniera
Hinge / Scharnier

Part	Article-Nr.	A	B	C	D	E
372	37201	11	14	10,5	6,5	6
372	37202	11	14	13,5	8,5	8
372	37203	18	21	13,5	8,5	8



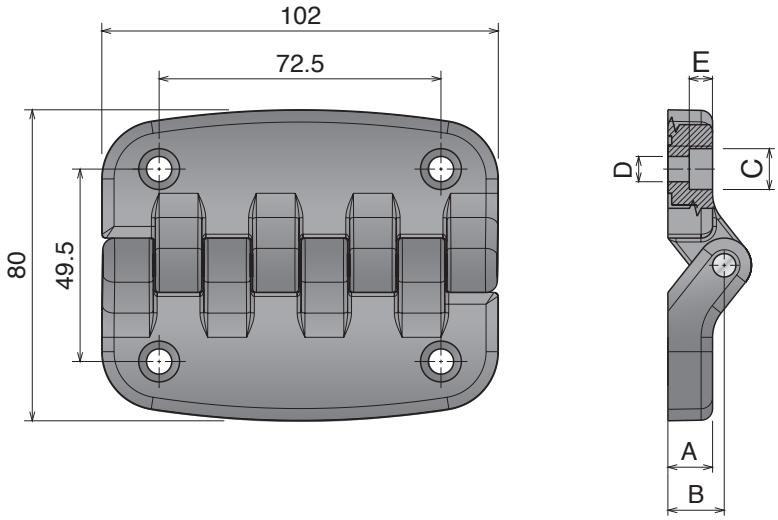

373 Cerniera
Hinge / Scharnier

Part	Article-Nr.	C	D	E
373	37301	10,5	6,5	6
373	37302	13,5	8,5	4



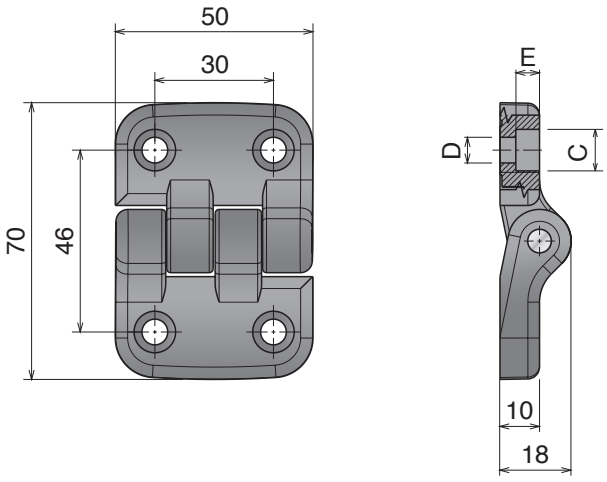

383 Cerniera
Hinge / Scharnier

Part	Article-Nr.	A	B	C	ØD	ØE	F	G
383	38301	24	25	14,5	4,5	14	44,6	41
383	38302	36	36	20,8	6,5	20	62,5	58



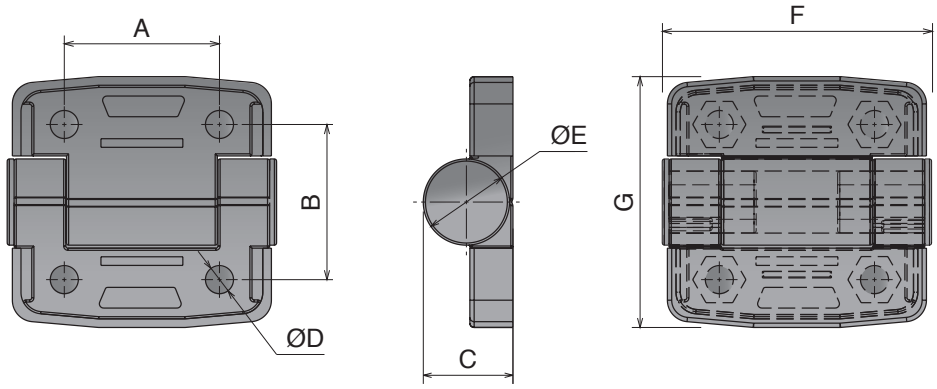

384 Cerniera Acciaio Inox
SS Hinge / Edelstahl Scharnier

Part	Article-Nr.	A	B	C	ØD	ØE	F	G
384	38401	20	32,5	4,3	5,5	10,5	40	51
384	38402	30	41	5	6,5	12,5	60	71



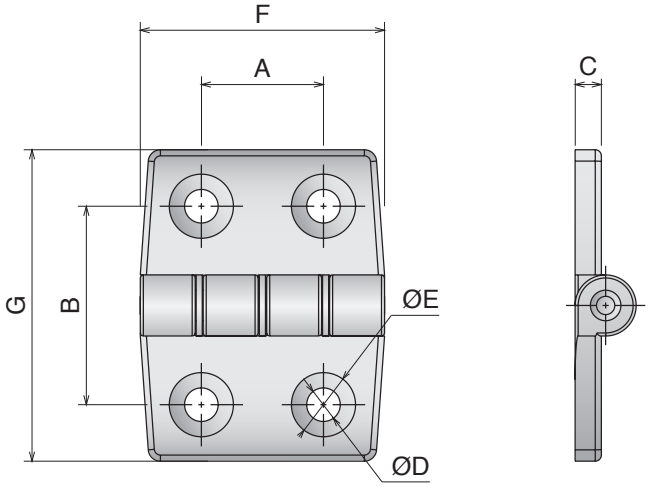

Materiale / *Material* / *Materialien:*
Poliammide/*Polyamide/Polyamid*

385 Maniglia ad impugnatura morbida
Soft touch handle / Handgriffe "Soft Touch"

Part	Article-Nr.
385	38501



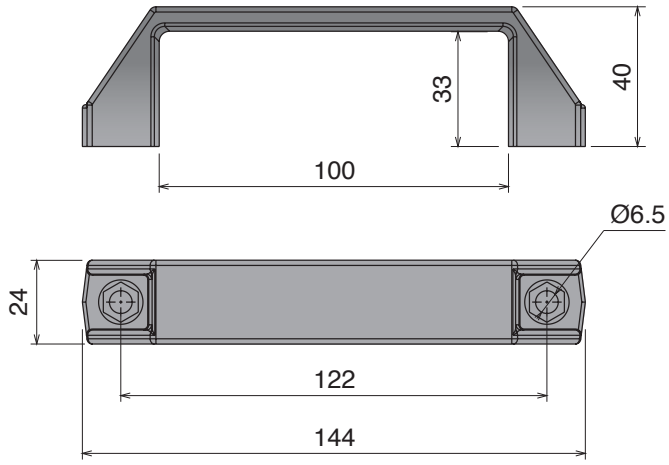

386 Maniglia
Handle / Handgriff

Part	Article-Nr.	A	B	C	Ød	ØD	E	F
386	38601	120	140	40	8,8	13	24,5	16
386	38602	160	185	48	8,8	15	29	16



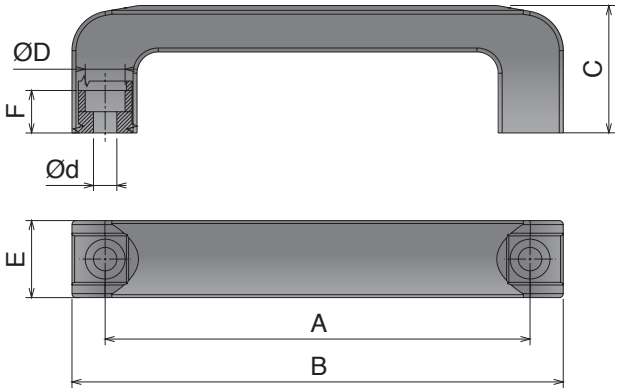

397 Maniglia acciaio inox
Stainless Steel handle / Handgriffe Edelstahl

Stainless Steel | AISI 304

Part	Article-Nr.	A
397	39701	95
397	39702	100
397	39703	110



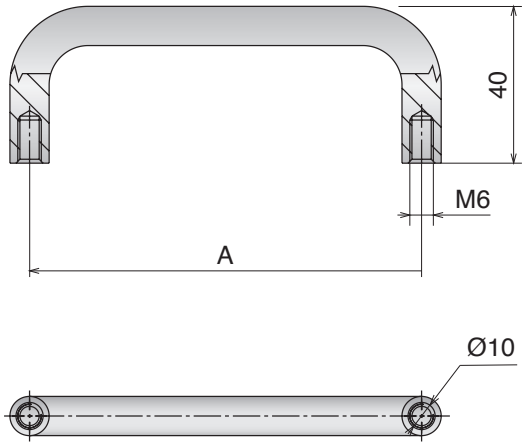

3003 Maniglia piena con boccola
Solid handle with threaded insert / Handgriff mit Innengewinde

New

Part	Article-Nr.	A	B	C	ØD	E	F	G	H
3003	300301	120	134	34	M6	9	50	16	25
3003	300302	120	134	34	M8	14	50	16	25



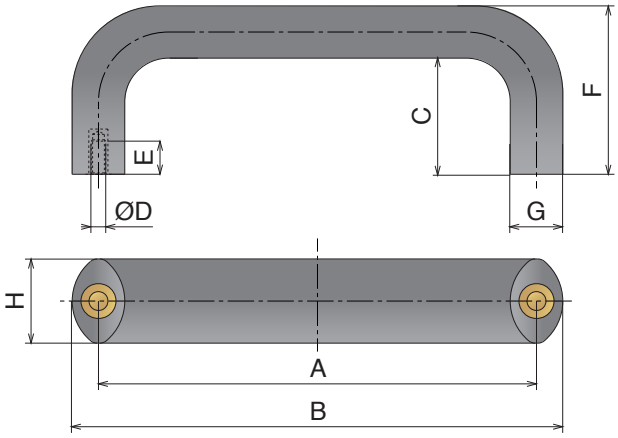

Materiale / *Material / Materialien:*
Morsetti: Poliammide/*Handels: Polyamide/Griff: Polyamid*
Inserto femmina: ottone nichelato/*Female insert: Nichel plated brass /Einsatz: Messing vernickelt*
Inserto maschio: Acciaio inox /*Male insert: Stainless steel /Aussengewinde: Edelstahl*

374 Maniglia a ripresa
Adjustable handle / Ratschenhebel

Range Extension

Part	Article-Nr.	A	B	C	D	E
374	37403	51	33	9	M5	12
374	37404	51	33	9	M6	12
374	37405	63	40	12	M6	18
374	37406	63	40	12	M8	18
374	37407	63	40	12	M10	18
374	37401	76	43	14	M8	18
374	37402	76	43	14	M10	18
374	37408	93	52	17	M12	22



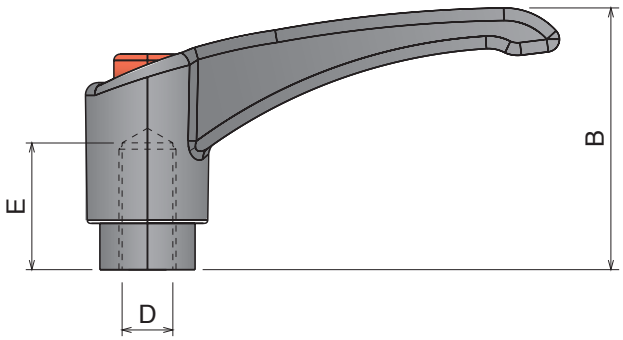

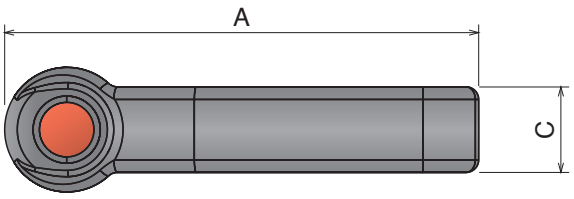

375 Maniglia a ripresa
Adjustable handle / Ratschenhebel

Range Extension

Part	Article-Nr.	A	B	C	D	E
375	37508	51	33	9	M5	15
375	37509	51	33	9	M6	15
375	37510	63	40	12	M8	15
375	37511	63	40	12	M8	20
375	37501	76	43	14	M8	20
375	37512	76	43	14	M8	25
375	37502	76	43	14	M10	25
375	37513	93	52	17	M10	20
375	37514	93	52	17	M10	25



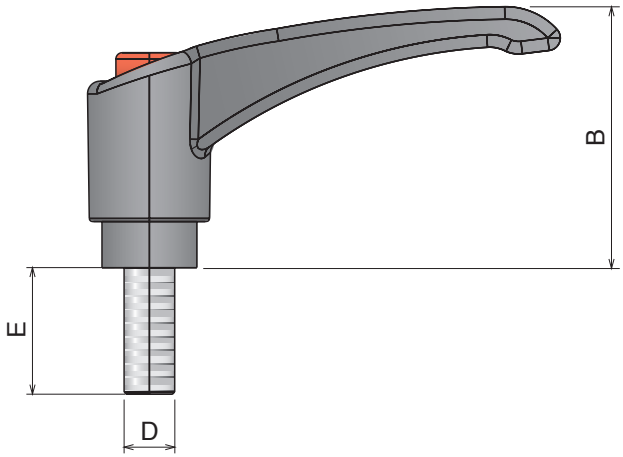

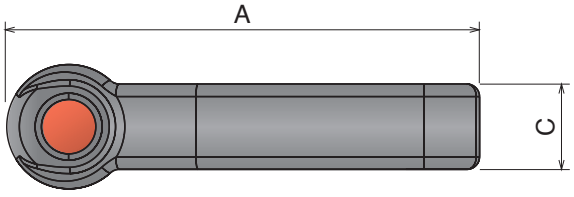

377 Morsetto standard per fotocellula o riflettore
Clamp for photocells or reflector / Klemme für Fotozelle oder Reflektor

Part	Article-Nr.	ØA
377	37701	14
377	37702	16
377	37703	20



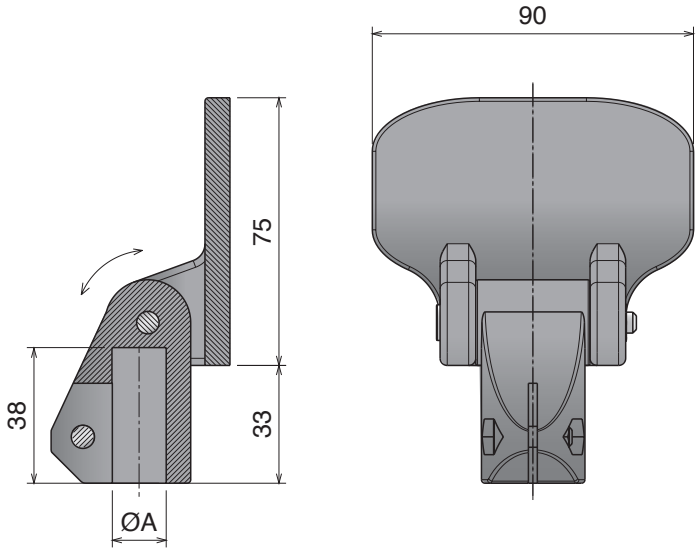

378 Morsetti "T"
T-clamp / T-Klemme

Part	Article-Nr.	A	B
378	37801	10	8
378	37802	12	10
378	37803	14	12



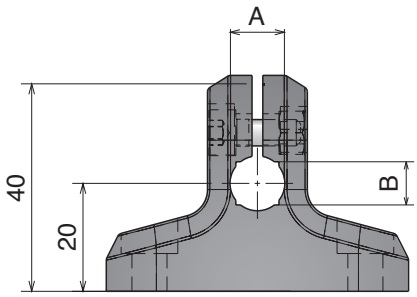

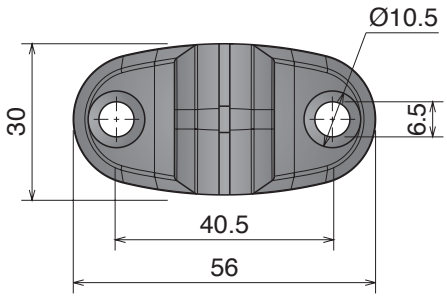

Materiale / *Material / Materialien:*
Morsetti: Poliammide/*Clamps: Polyamide/Klemme: Polyamid*
Viti e dadi: Acciaio inox /*Screws and nuts: Stainless steel /Schraube und Mutter: Edelstahl*

379 Morsetto per riflettore
Clamp for reflector / Reflektorklemme

Part	Article-Nr.	A	B
379	37901	10	8
379	37902	12	10
379	37903	14	12



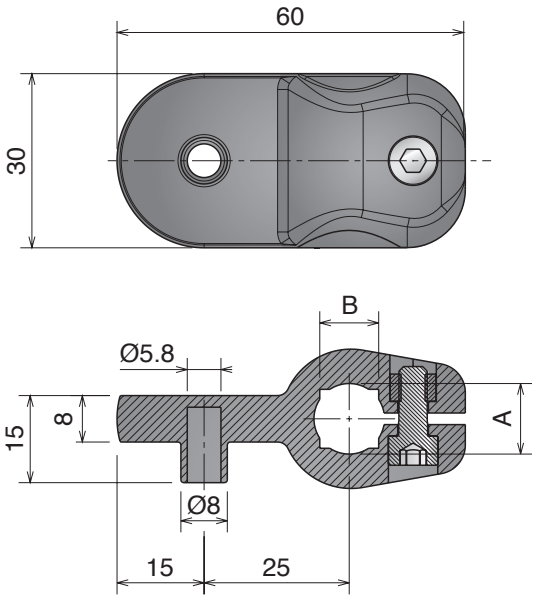

380 Morsetto per fotocellule o sensori
Clamp for photocells or sensors / Klemme für Lichtschranke oder Sensoren

Part	Article-Nr.	A	B
380	38001	10	8
380	38002	12	10
380	38003	14	12



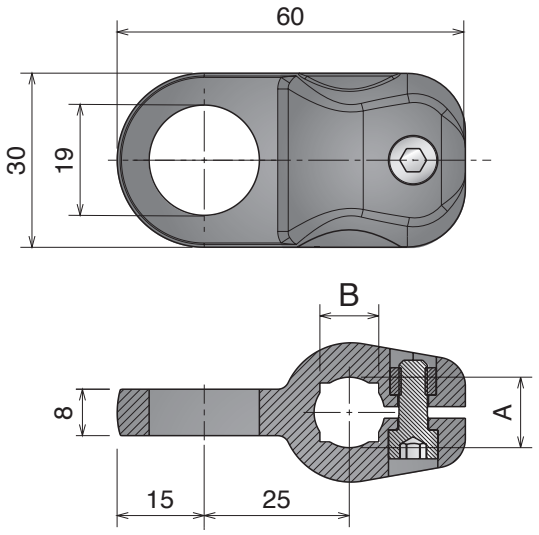

381 Morsetto a croce
Cross clamp / Kreuzklemmee

Part	Article-Nr.	ØA	ØB	C	D
381	38101	14	12	14	12
381	38102	16	14	16	14
381	38103	18	-	18	-
381	38104	20	16	20	16



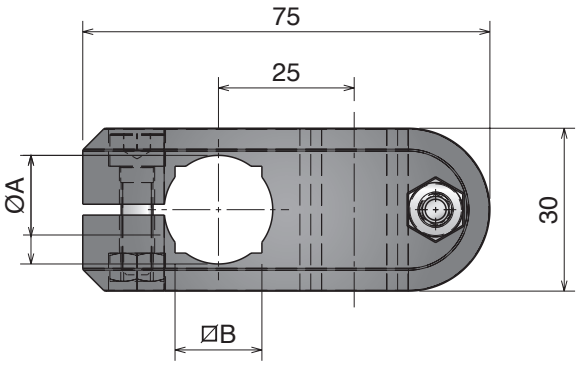

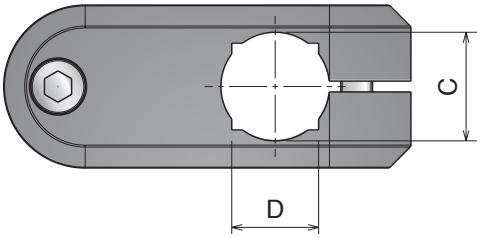

382 Morsetto a croce
Cross clamp / Kreuzklemmee

Part	Article-Nr.	ØA	ØB	C	D
382	38201	10	8	10	8
382	38202	12	10	12	10
382	38203	14	12	14	12



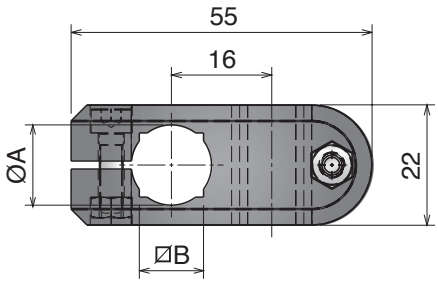

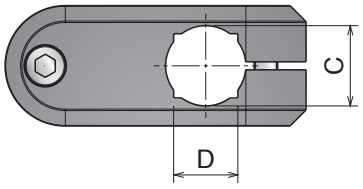

Materiale / *Material* / *Materialien:* Corpo: PA/*Body: PA/Korpus: PA*
Volantino: PA+ ottone nichelato/*Knob: PA+ nickel plated bross/Stengriff: PA+ messing vernickelt*
Tirante e rondella: Acciaio inox/*Eyebott and washer: Stainless steel/*
Augenschraube und Unterlegs: Edelstahl

376 Morsetto a croce "extra"
Extra Cross Block / Kreuzklemme "Extra"

Part	Article-Nr.	A	B
376	37601	30x30	16
376	37602	40x40	16
376	37603	40x40	20



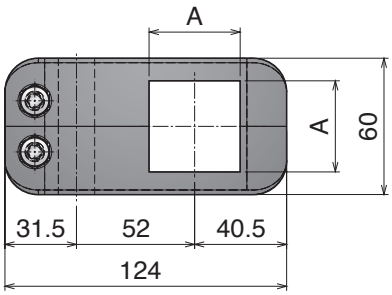



Morsetto a croce "extra" con maniglia
Extra Cross Block with handle / Kreuzklemme "Extra" m. Ratschenhebel

Part	Article-Nr.	A	B
376	37611	30x30	16
376	37612	40x40	16
376	37613	40x40	20

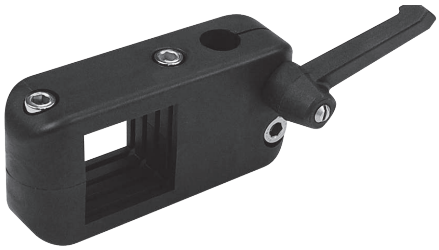

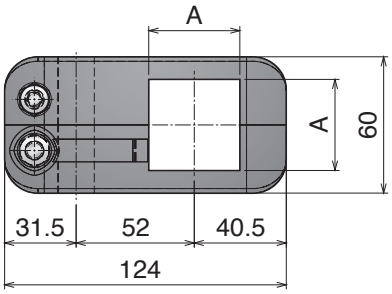

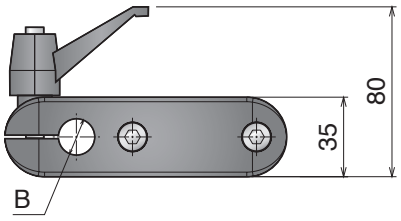

Morsetto a croce "extra" con maniglie
Extra Cross Block with handles / Kreuzklemme "Extra" m. Ratschenhebel

Part	Article-Nr.	A	B
376	37621	30x30	16
376	37622	40x40	16
376	37623	40x40	20

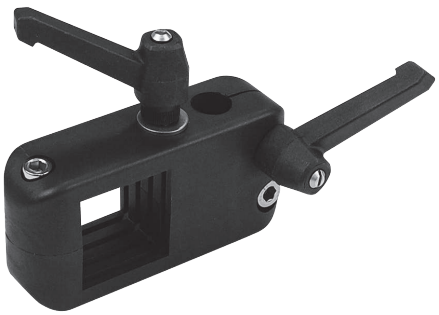

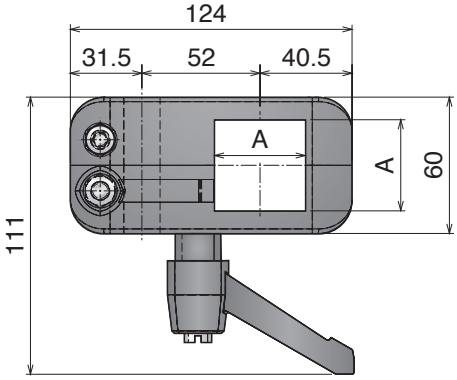

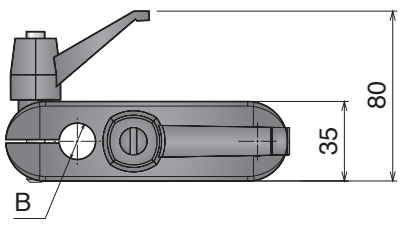

Materiale / *Material* / *Materialien:* Corpo: PA/*Body: PA/Korpus: PA*
Volantino: PA+ ottone nichelato/*Knob: PA+ nickel plated bross/Stengriff: PA+ messing vernickelt*
Tirante e rondella: Acciaio inox/*Eyebott and washer: Stainless steel/*
Augenschraube und Unterlegs: Edelstahl

391 Morsetto a croce
Cross clamp / Kreuzklemmee

Part	Article-Nr.	ØA	ØB
391	39101	12	12
391	39103	14	14
391	39102	16	16
391	39104	12	16



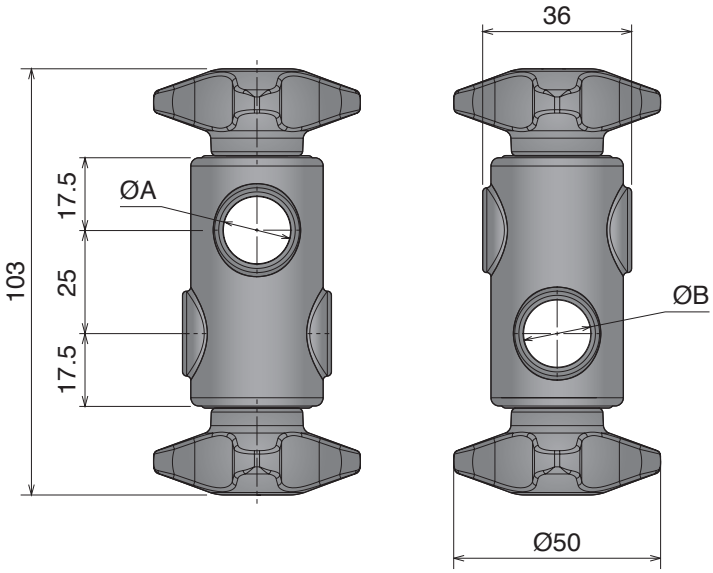

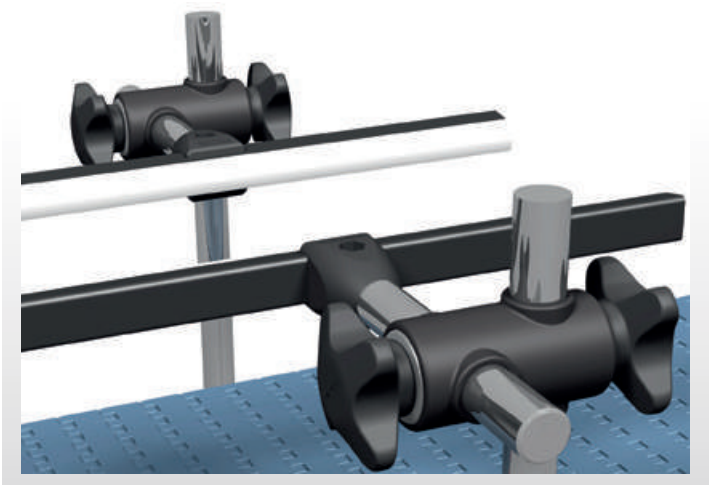

Materiale / *Material / Materialien:*
Supporto: Acciaio inox/*Support: Stainless steel/Halter: Edelstahl*
Morsetto: PA/*Clamps: PA/Klemme: PA*

387 Sostegno per Sgocciolatoio
Drip Tray Supports / Tropfblechhalter

Max load capacity 20 Kg

Part	Article-Nr.	L	Type
387	38701	180	A
387	38702	250	A
387	38703	180	B
387	38704	250	B
387	38705	280	B
387	38706	246	C
387	38707	396	C
387	38708	180	D
387	38709	250	D



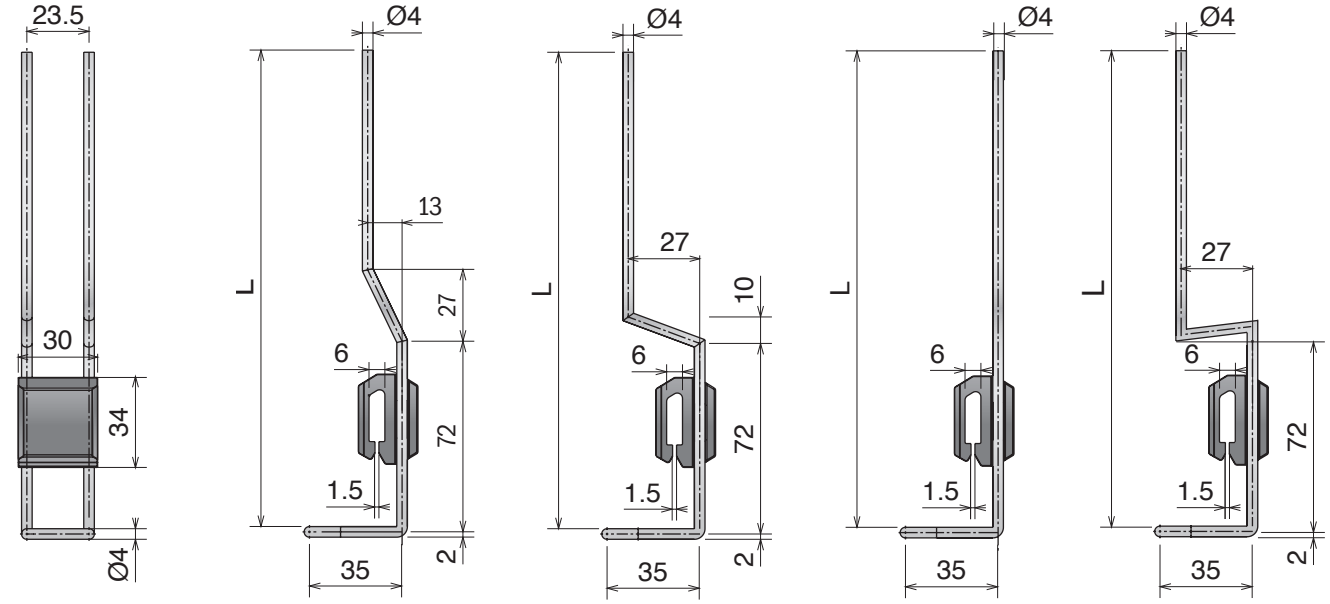

Type A *Type B* *Type C* *Type D*

388 Rondella di fissaggio
Fixing washer / Fixierscheibe

Part	Article-Nr.	Type
388	38801	A
388	38802	B



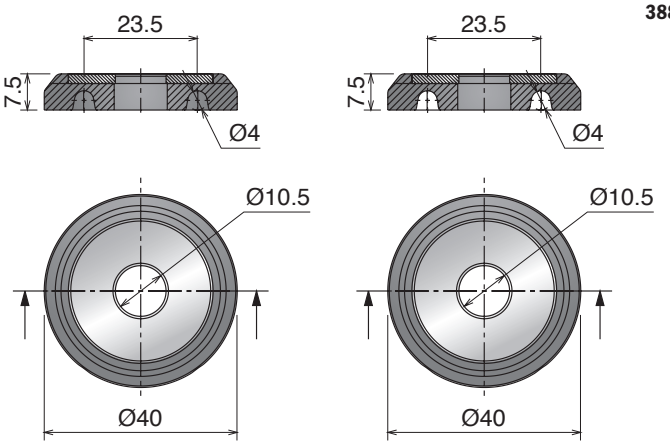

Type A *Type B*



413

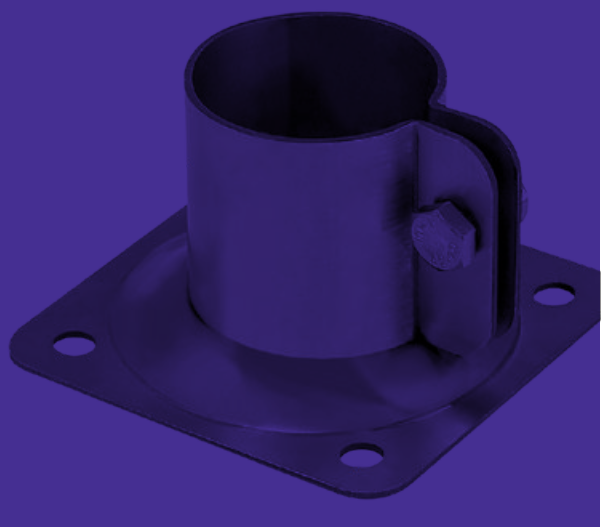

401  Pag 414

402  Pag 414

403  Pag 415

404  Pag 415

407  Pag 416

408  Pag 416

409  Pag 417

499  Pag 417

410  Pag 418

411  Pag 418

426  Pag 419

432  Pag 419

427  Pag 420

425  Pag 420

413  Pag 421

417  Pag 421

414  Pag 422

419  Pag 423

420  Pag 423

415  Pag 424

416  Pag 425


428 Pag 426


429 Pag 426


430 Pag 426

418  Pag 427

421  Pag 428

422  Pag 428

423  Pag 428

424  Pag 428

Materiale / *Material / Materialien:*
Basi: Poliammide/*Base: Polyamide/Halter: Polyamid*
Viti e rondelle: Acciaio inox/*Screws and washers: Stainless steel/ Schrauben und Scheibe: Edelstahl*
Inserti e dadi: ottone nichelato/Inserts nuts: nickel plated brass /Mutter: Messing vernickelt

401 Base a due braccia
Bipod / Zweibeinhalter

Screw included

Part	Article-Nr.	ØA
401	40101	48,3
401	40105	50,9
401	40102	60,3



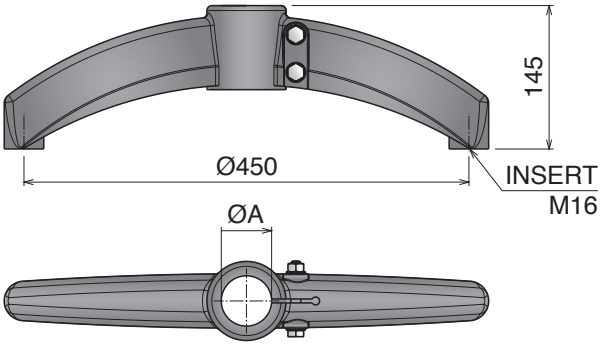

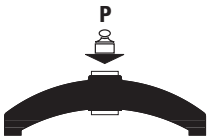

Tube sliding load resistance
P= 8000 N
Max applicable load
P= 9600 N
Bolts tightening torque
25 N.m

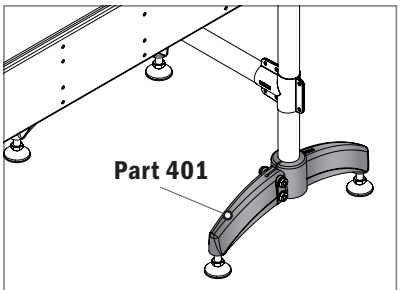

Example of application

402 Base a due braccia 180° con giunto
Bipod 180° with connector / Zweibeinhalter 180° m. Verbinder

Screw included

Part	Article-Nr.	ØA	ØB
402	40201	48,3	48,3
402	40205	50,9	48,3
402	40202	60,3	48,3
402	40203	48,3	42,4
402	40206	50,9	42,4
402	40204	60,3	42,4



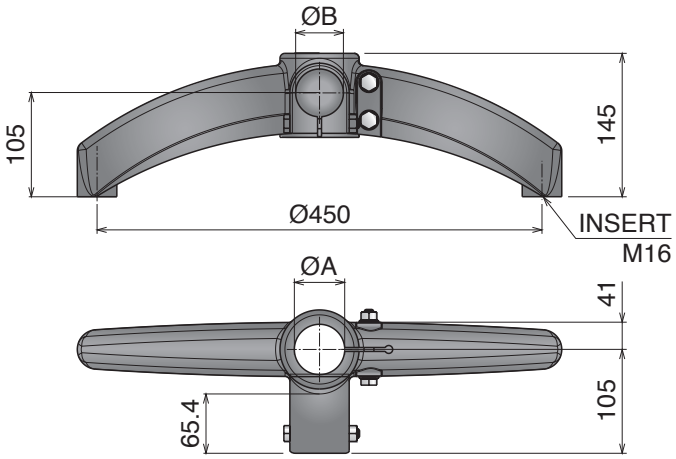



Tube sliding load resistance
P= 8000 N
Max applicable load
P= 8000 N
Bolts tightening torque
25 N.m

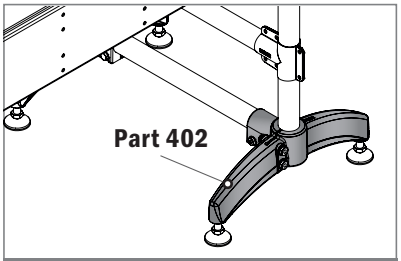

Example of application

403 Base a due braccia 120° con giunto
Bipod 120° with connector / Zweibeinhalter 120° m. Verbinder

Screw included



Part	Article-Nr.	ØA	ØB
403	40301	48,3	48,3
403	40305	50,9	48,3
403	40302	60,3	48,3
403	40303	48,3	42,4
403	40306	50,9	42,4
403	40304	60,3	42,4

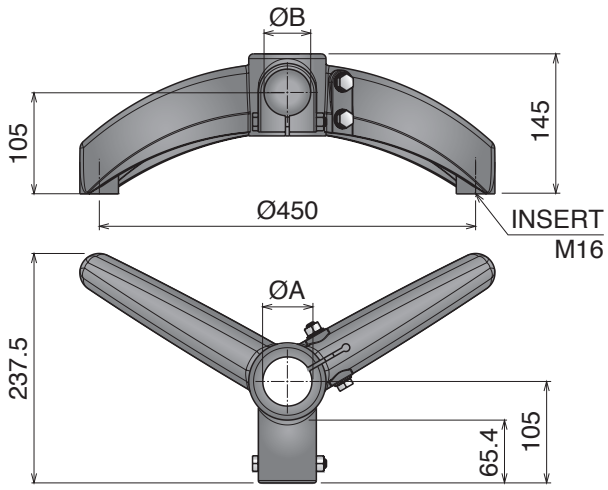



Tube sliding load resistance
P= 8000 N
Max applicable load
P= 8000 N
Bolts tightening torque
25 N.m

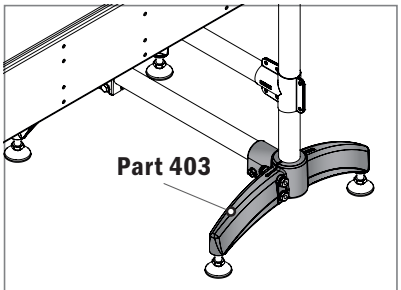

Example of application

404 Base a tre braccia
Tripod / Dreibeinhalter

Screw included



Part	Article-Nr.	ØA
404	40401	48,3
404	40405	50,9
404	40402	60,3

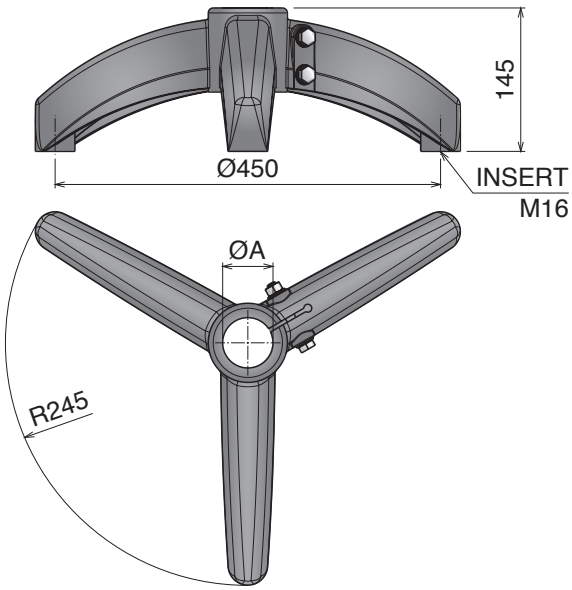



Tube sliding load resistance
P= 8000 N
Max applicable load
P= 10000 N
Bolts tightening torque
25 N.m

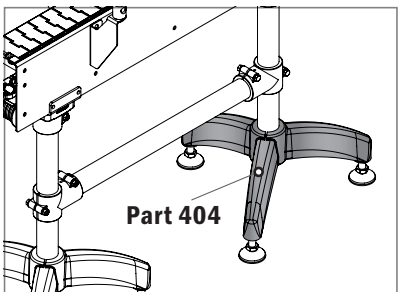

Example of application

Materiale / *Material / Materialien:*
Testata: Poliammide/Side bracket: Polyamide/Halter: Polyamid
Viti e rondelle: Acciaio inox/Screws and washers: Stainless steel/Schrauben und Scheibe: Edelstahl
Dadi: ottone nichelato/Nuts: nickel plated brass/Mutter: Messing vernickelt

407 Testata laterale
Side mounting top bracket / seitlicher Stützkopf

Max recommended tightening torque 2 kg/m

Part	Article-Nr.	ØA
407	40701	48,3
407	40702	50,9



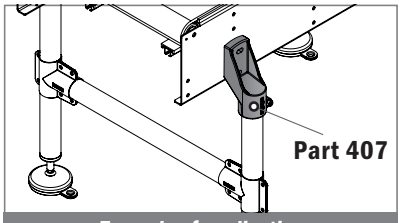

Example of application

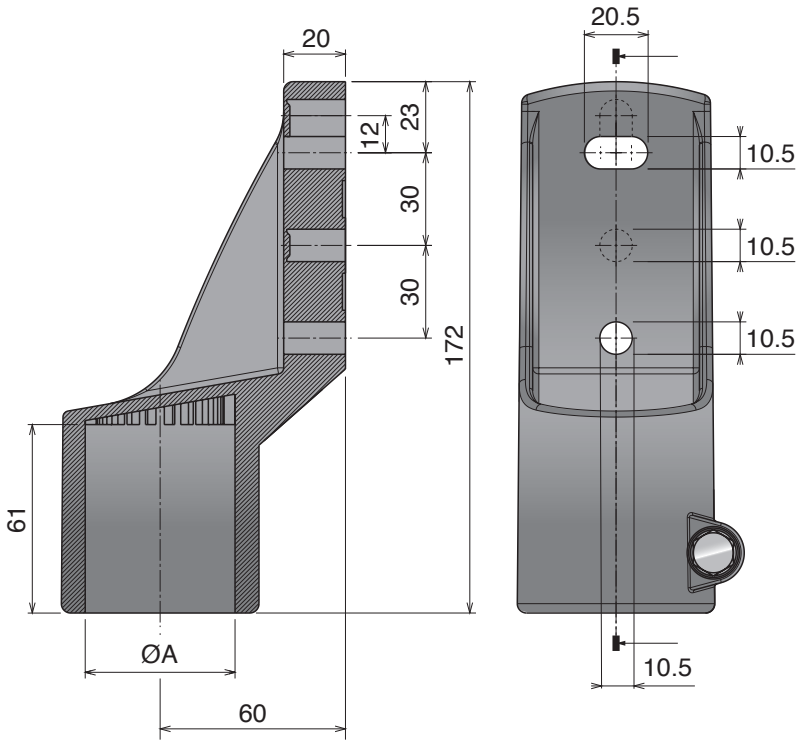

408 Testata laterale
Side mounting top bracket / seitlicher Stützkopf

Max recommended tightening torque 2,5 kg/m | Screw not included

Part	Article-Nr.
408	40801



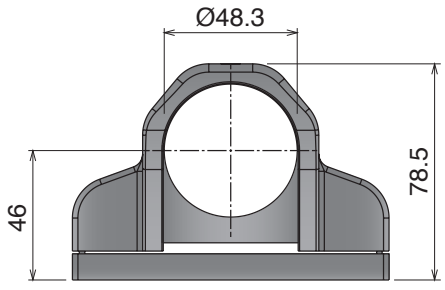

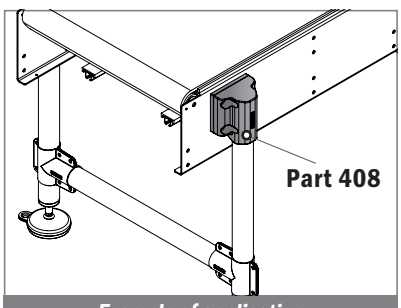

Example of application

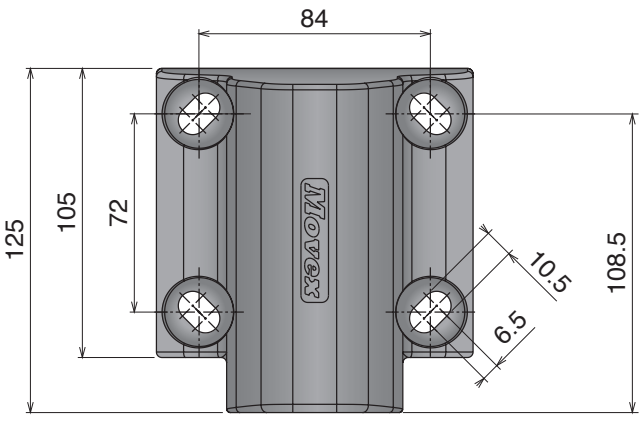

Materiale / *Material / Materialien:*
Testata: Acciaio inox/*Support head: stainless steel/Halter: Edelstahl*
Viti e rondelle: Acciaio inox /Screws and washers: Stainless steel / Mutter: Edelstahl

409 Testata laterale
Side mounting top bracket / seitlicher Stützkopf

Stainless Steel | AISI 304

Part	Article-Nr.	ØA
409	40901	48,3



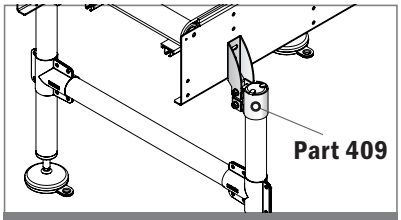

Example of application

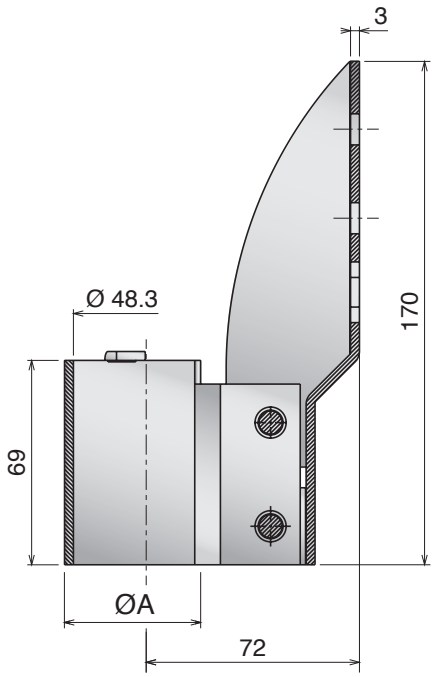

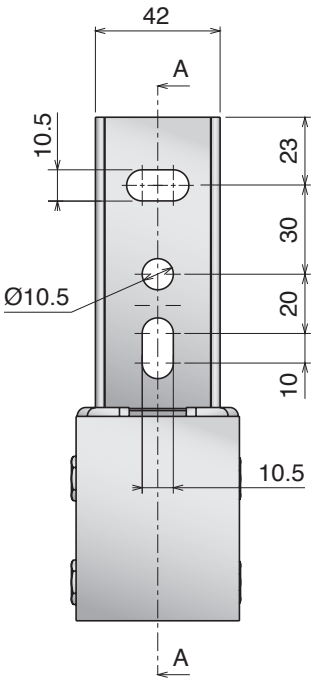

499 Testata laterale
Side mounting top bracket / seitlicher Stützkopf

Stainless Steel | AISI 304

Screw not included

Part	Article-Nr.	ØA
499	49995	48,3



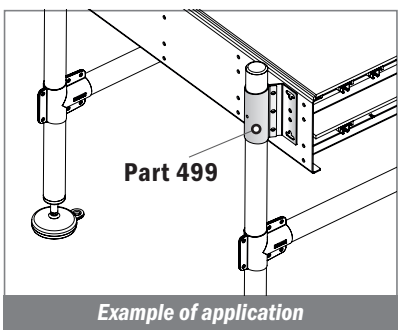

Example of application

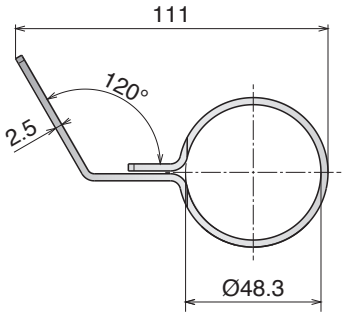

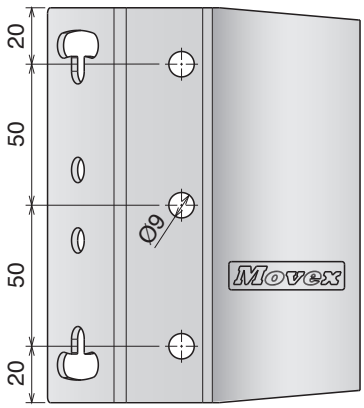

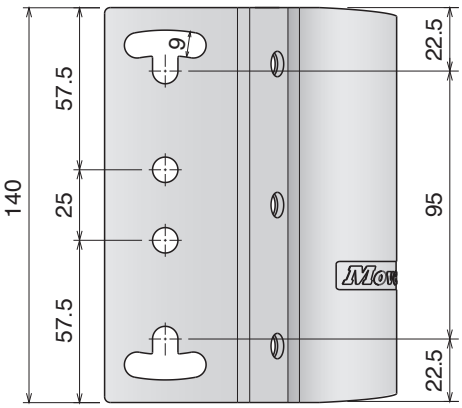

Materiale / *Material / Materialien:*
Testata: Poliammide/Support head: Polyamide/Halter: Polyamid
Viti e rondelle e dado: Acciaio inox /Screws, washers and nut: Stainless steel /Schrauben, Scheibe umd Mutter: Edelstahl

410 Testata d'appoggio
Support head / Stützkopf

Max recommended tightening torque 3,5 kg/m

Part	Article-Nr.	ØA
410	41001	48,3
410	41002	60,3



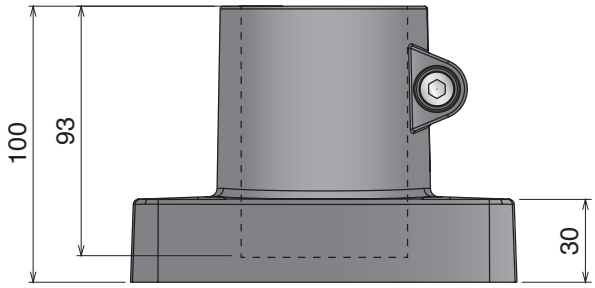

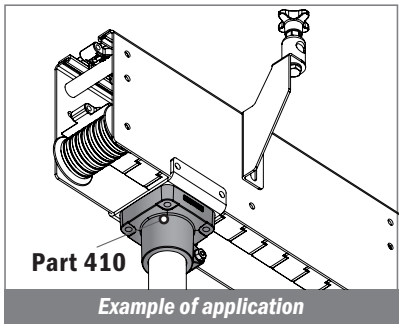

Example of application

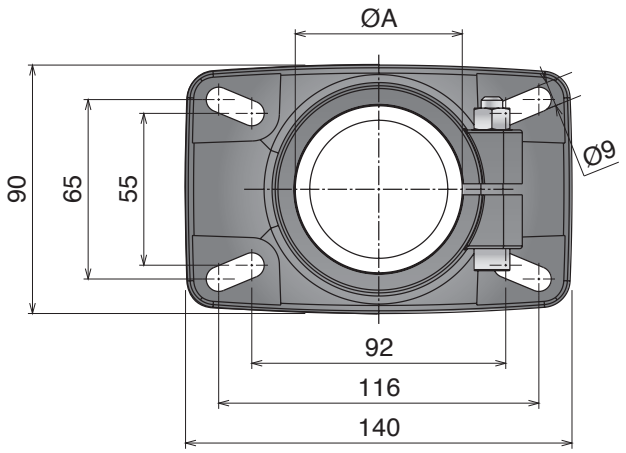

411 Testata d'appoggio
Support head / Stützkopf

Max recommended tightening torque 1,5 kg/m

Part	Article-Nr.	ØA
411	41101	48,3
411	41102	50,9



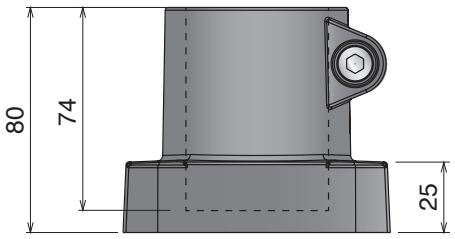

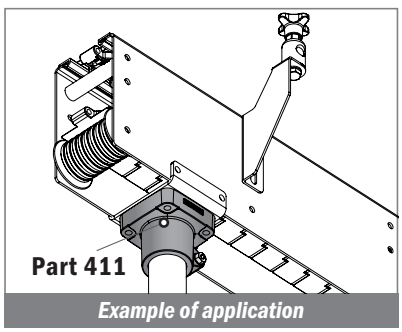

Example of application

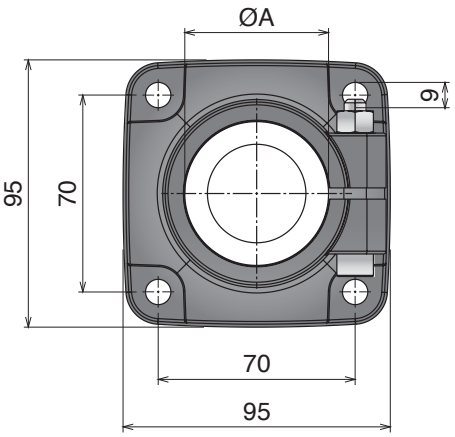

426 Testata d'appoggio
Support head / Stützkopf

Stainless Steel | AISI 304

Screw included

Part	Article-Nr.
426	42601



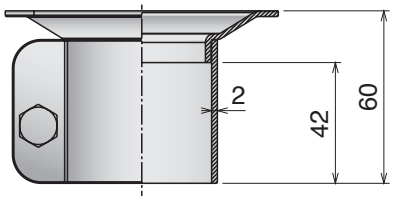

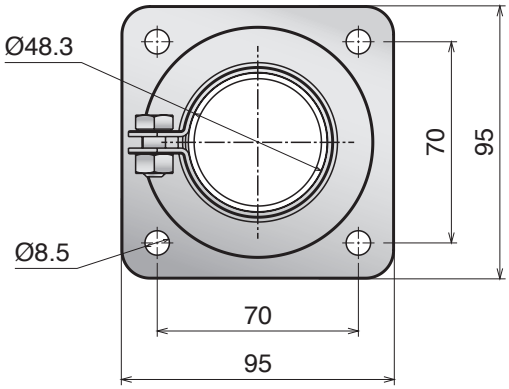

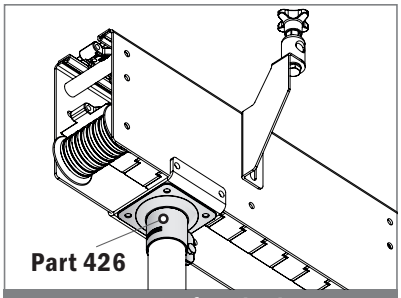

Example of application

432 Tappo per tubi metrici tondi
Plug for Round Metric Tubes / Runde Lamellenstopfen für metrische Röhren

New

Part	Article-Nr.
432	43201



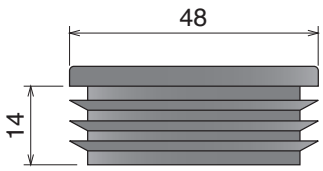

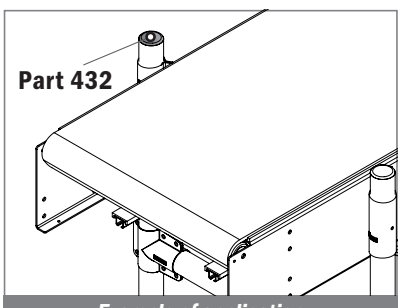

Example of application

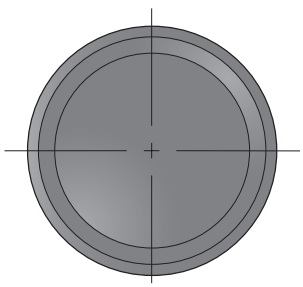

Materiale / *Material / Materialien:*
Acciaio inox / *Stainless steel / Edelstahl*

427 Supporto laterale
Side bracket / Seitenhalter

Stainless Steel | AISI 304

Screw-washer not included

Part	Article-Nr.	ØA
427	42701	16
427	42702	20



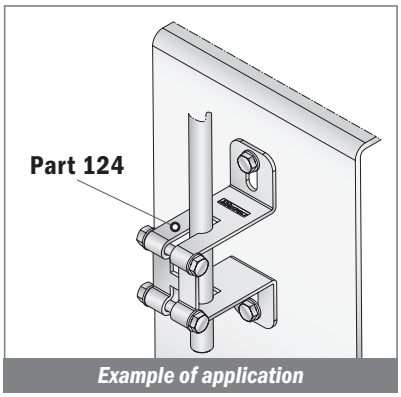

Example of application

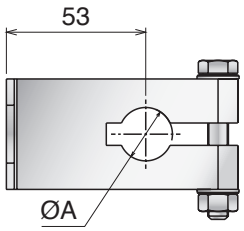

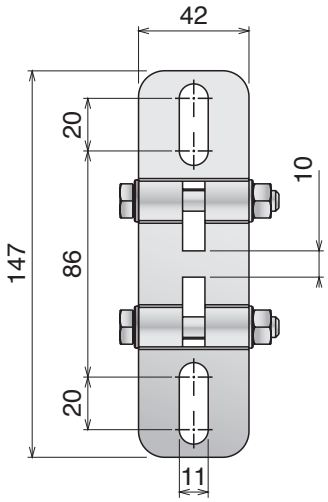

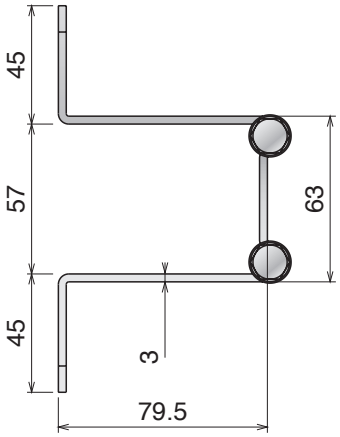

425 Morsetto a collare
Clamp collar / Klemmschelle

Stainless Steel | AISI 304

Part	Article-Nr.	A	ØB
425	42501	25	48,3
425	42511	25	50,8
425	42521	76,2	50,8



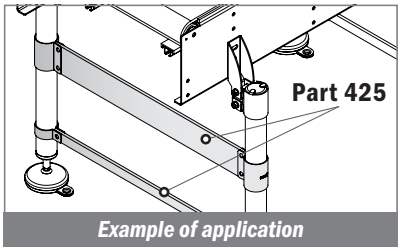

Example of application

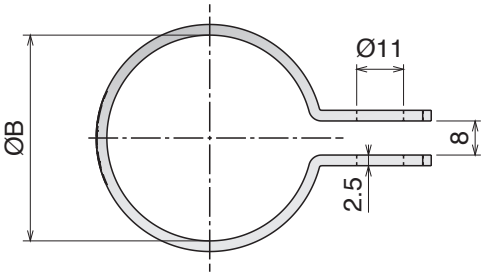

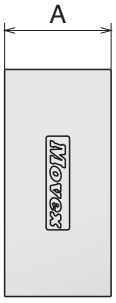

Movex

413 Giunto di collegamento
Connecting joint / Verbindungselement

Max recommended tightening torque 1,5 kg/m

Part	Article-Nr.	ØA	ØB	C	D	E
413	41301	48,3	48,3	134	86	68
413	41302	60,3	48,3	146	98	80
413	41303	60,3	60,3	146	98	80



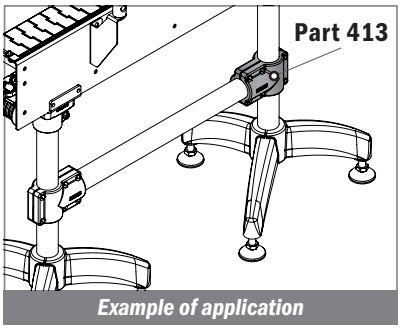

Example of application

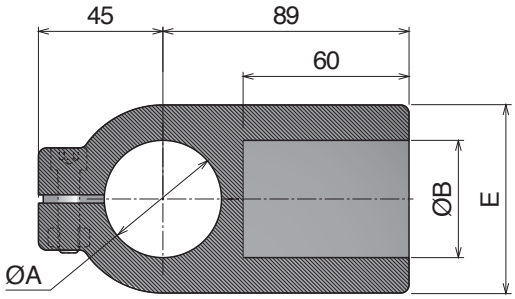

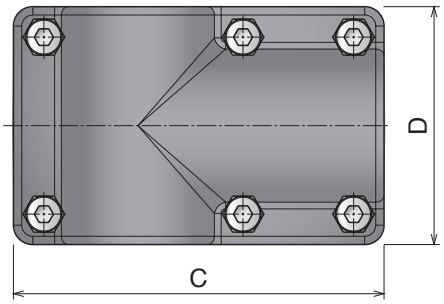

417 Giunto di collegamento
Connecting joint / Verbindungselement

Part	Article-Nr.	ØA
417	41701	48,3
417	41702	50,9



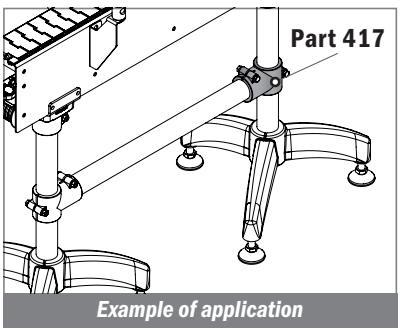

Example of application

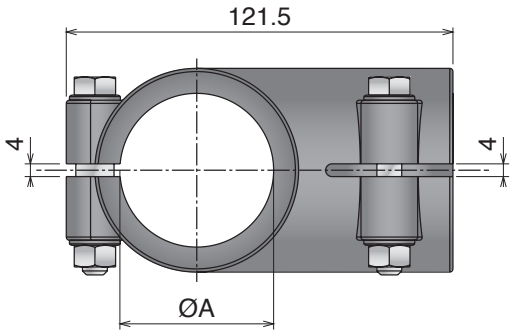

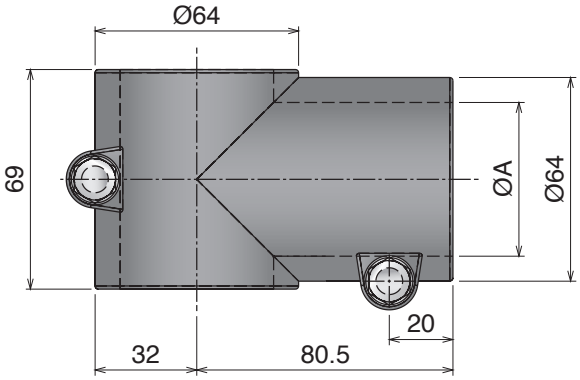

Materiale / *Material / Materialien:*
Acciaio inox / *Stainless steel / Edelstahl*

414 Giunto di collegamento (acciaio inox)
Connecting joint (SS) / Verbindungselement (Edelstahl)

Stainless Steel | AISI 304

Max recommended tightening torque 2,5 kg/m

Part	Article-Nr.	ØA	ØB	C	D	E
414	41401	48,3	48,3	100	130	72,5
414	41402	60,3	60,3	110	150	92,5



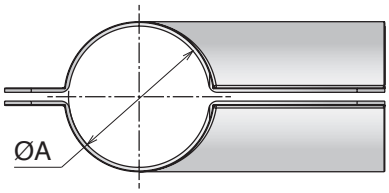

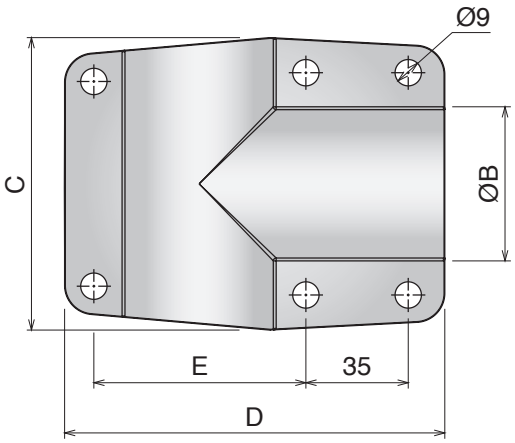

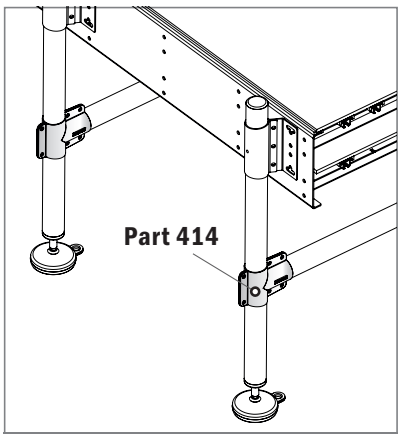

Example of application

419 Tappi ad espansione
Expansions plugs / *Gewindezapfen, Spreizbar*

Part	Article-Nr. Brass Bush	Article-Nr. PA Bush	ØA	B	C	M
419	41907	-	20	19	3	M8
419	41908	-	20	19	3	M10
419	41901	-	20	20	4	M8
419	41902	-	20	20	4	M10
419	41903	41913	38	40	5	M8
419	41904	41914	38	40	5	M10
419	41905	41915	42,4	40	5	M8
419	41906	41916	42,4	40	5	M10



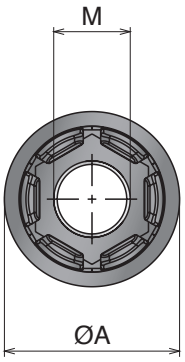

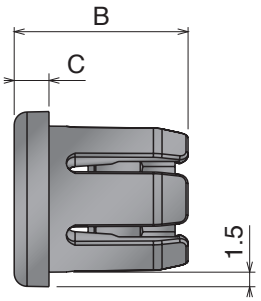

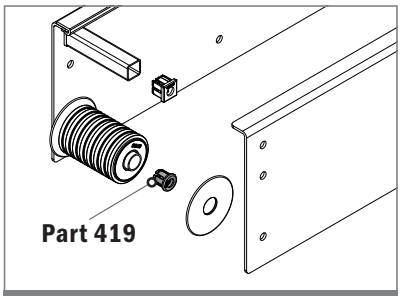

Example of application

420 Tappi ad espansione
Expansions plugs / *Gewindezapfen, Spreizbar*

Part	Article-Nr. Brass Bush	Article-Nr. PA Bush	A	B	C	D	M
420	42001	-	20	20	4	1,5	M8
420	42002	-	20	20	4	1,5	M10
420	42003	-	20	20	4	2	M8
420	42004	-	20	20	4	2	M10
420	42005	42015	40	40	5	2	M8
420	42006	42016	40	40	5	2	M10



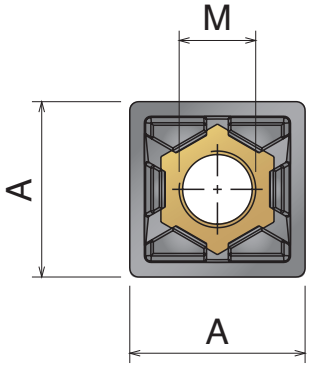

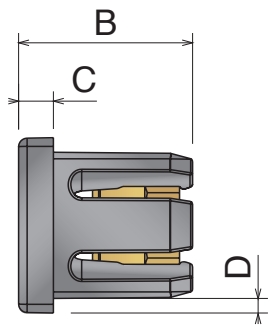

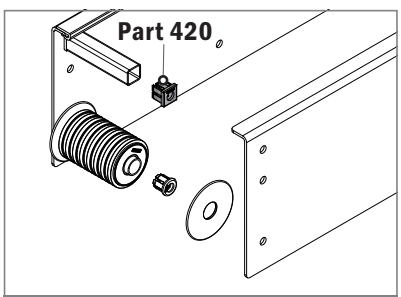

Example of application

Materiale / *Material / Materialien:*
Tappo: Poliammide / *Plug: Polyamide / Stopfen: Polyamid*
Inserti: PA o ottone nichelato / *Inserts: PA or nickel plated brass*
Einsatz: PA oder Messing vernickelt

415 Tappi tondi filettati
Threaded bushings for round tubes / Gewindezapfen f. Rund-Rohr



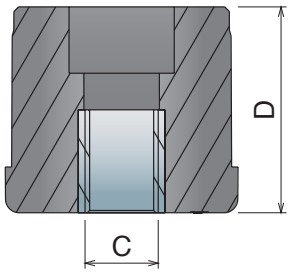

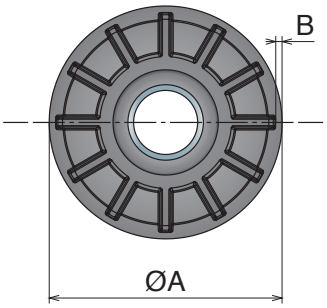

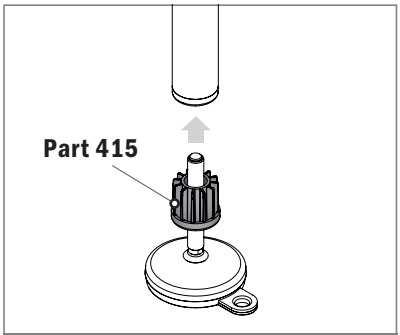

Example of application

Part	Art.-Nr.	ØA	B	C	D
415	41507	30	1	M10	33
415	41508			M12	33
415	41509			M14	33
415	41510			M16	33
415	41511	30	1,5	M10	33
415	41512			M12	33
415	41513			M14	33
415	41514			M16	33
415	41515	30	2	M10	33
415	41516			M12	33
415	41517			M14	33
415	41518			M16	33
415	41519	30	2,5	M10	33
415	41520			M12	33
415	41521			M14	33
415	41522			M16	33
415	41523	38	1,5	M10	40
415	41524			M12	40
415	41525			M14	40
415	41526			M16	40
415	41527	38	2	M10	40
415	41528			M12	40
415	41529			M14	40
415	41530			M16	40
415	41531	38	2,5	M10	40
415	41532			M12	40
415	41533			M14	40
415	41534			M16	40
415	41535	42,4	1,5	M10	43
415	41536			M12	43
415	41537			M14	43
415	41538			M16	43
415	41539			M20	43
415	41540	42,4	2	M10	43
415	41541			M12	43
415	41542			M14	43
415	41543			M16	43
415	41544			M20	43
415	41545	42,4	2,5	M10	43
415	41546			M12	43
415	41547			M14	43
415	41548			M16	43
415	41549			M20	43
415	41550	48,3	1,5	M10	48
415	41551			M12	48
415	41552			M14	48
415	41501			M16	48
415	41502			M20	48

Part	Art.-Nr.	ØA	B	C	D
415	41553	48,3	2	M10	48
415	41554			M12	48
415	41555			M14	48
415	41556			M16	48
415	41557			M20	48
415	41558	48,3	2,5	M10	48
415	41559			M12	48
415	41560			M14	48
415	41561			M16	48
415	41562			M20	48
415	41563	50	1,5	M10	50
415	41564			M12	50
415	41565			M14	50
415	41503			M16	50
415	41504			M20	50
415	41566	50,9	1,5	M10	50
415	41567			M12	50
415	41568			M14	50
415	41569			M16	50
415	41570			M20	50
415	41571	50,9	2	M10	50
415	41572			M12	50
415	41573			M14	50
415	41574			M16	50
415	41575			M20	50
415	41576	50,9	2,5	M10	50
415	41577			M12	50
415	41578			M14	50
415	41579			M16	50
415	41580			M20	50
415	41581	60,3	1,5	M10	55
415	41582			M12	55
415	41583			M14	55
415	41584			M16	55
415	41585			M20	55
415	41586	60,3	2	M10	55
415	41587			M12	55
415	41588			M14	55
415	41505			M16	55
415	41506			M20	55
415	41589	60,3	2,5	M10	55
415	41590			M12	55
415	41591			M14	55
415	41592			M16	55
415	41593			M20	55

416 Tappi quadri filettati
Threaded bushings for square tubes / Gewindezapfen f. Vierkant-Rohr



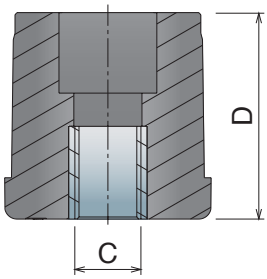

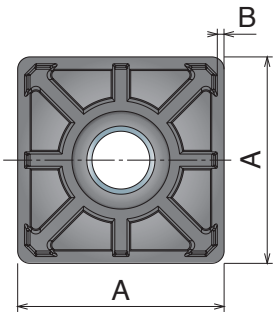

Part	Article-Nr.	ØA	B	C	D
416	41601	25	1,5	M10	30
416	41602			M12	30
416	41611	30	1,5	M10	33
416	41603			M12	33
416	41612			M14	33
416	41604			M16	33
416	41613	30	2	M10	33
416	41614			M12	33
416	41615			M14	33
416	41616			M16	33
416	41617	35	1,5	M10	43
416	41618			M12	43
416	41619			M14	43
416	41620			M16	43
416	41621			M20	43
416	41622	35	2	M10	43
416	41623			M12	43
416	41624			M14	43
416	41625			M16	43
416	41626			M20	43
416	41681	38,1	1,6	M10	43
416	41682			M12	43
416	41683			M14	43
416	41684			M16	43
416	41685			M20	43
416	41686	38,1	3	M10	43
416	41687			M12	43
416	41688			M14	43
416	41689			M16	43
416	41690			M20	43
416	41627	40	1,2	M10	43
416	41628			M12	43
416	41629			M14	43
416	41630			M16	43
416	41631			M20	43
416	41632	40	1,5	M10	43
416	41605			M12	43
416	41633			M14	43
416	41606			M16	43
416	41634			M20	43
416	41635	40	2	M10	43
416	41636			M12	43
416	41637			M14	45
416	41607			M16	45
416	41608			M20	45
416	41638	40	2,5	M10	45
416	41639			M12	45
416	41640			M14	45
416	41641			M16	45
416	41642			M20	45

Part	Article-Nr.	ØA	B	C	D
416	41643	45	2	M10	50
416	41644			M12	50
416	41645			M14	50
416	41646			M16	50
416	41647			M20	50
416	41648	50	1,2	M10	50
416	41649			M12	50
416	41650			M14	50
416	41651			M16	50
416	41652			M20	50
416	41653	50	1,5	M10	50
416	41654			M12	50
416	41655			M14	50
416	41656			M16	50
416	41657			M20	50
416	41658	50	2	M10	50
416	41659			M12	50
416	41660			M14	50
416	41609			M16	50
416	41610			M20	50
416	41661	50	2,5	M10	50
416	41662			M12	50
416	41663			M14	50
416	41664			M16	50
416	41665			M20	50
416	41666	50	3	M10	50
416	41667			M12	50
416	41668			M14	50
416	41669			M16	50
416	41670			M20	50
416	41671	60	2	M10	55
416	41672			M12	55
416	41673			M14	55
416	41674			M16	55
416	41675			M20	55
416	41676	60	3	M10	55
416	41677			M12	55
416	41678			M14	55
416	41679			M16	55
416	41680			M20	55

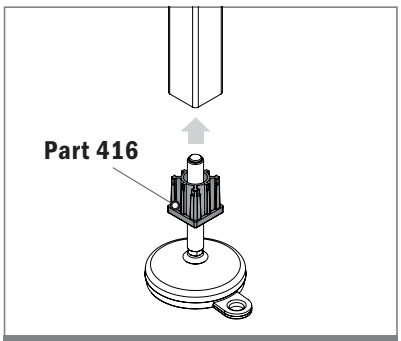

Example of application

Materiale / *Material / Materialien:*
Tappi: Acciaio Inox / *Plug: SS / Stopfen: Edelstahl*

428 Tappi quadri filettati
Threaded bushings for square tube / Gewindezapfen f. Vierkant-Rohr

Stainless Steel | AISI 304



Part	Article-Nr.	A	C	ØB	E
428	42801	40	M16	20	10
428	42802	40	M20	23	11,5
428	42803	45	M16	20	10
428	42804	45	M20	23	11,5
428	42805	50	M16	20	10
428	42806	50	M20	23	11,5
428	42807	60	M16	20	10
428	42808	60	M20	23	11,5

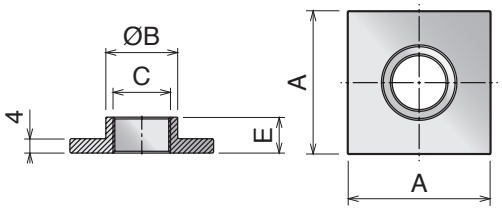

429 Tappi tondi filettati
Threaded bushings for round tube / Gewindezapfen f. Rund-Rohr

Stainless Steel | AISI 304



Part	Article-Nr.	C	ØB	E
429	42901	M16	20	10
429	42902	M20	23	11,5

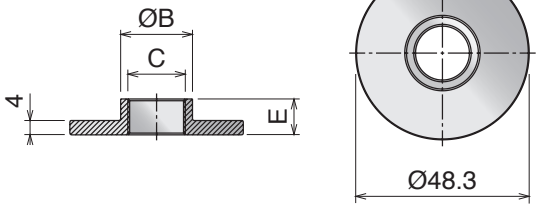

430 Tappi rettangolari filettati
Threaded bushings for rectangular tube / Gewindezapfen f. Rechteck

Stainless Steel | AISI 304



Part	Article-Nr.	C	ØB	E
430	43001	M16	20	10
430	43002	M20	23	11,5

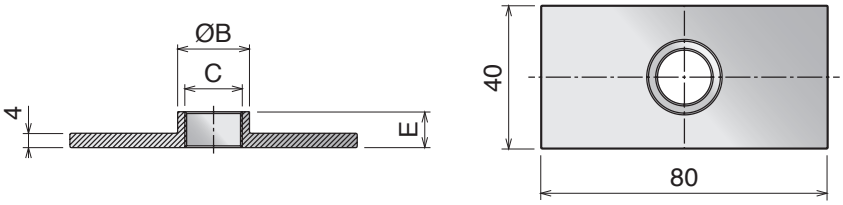

418 Giunto di collegamento
Connecting joint / Verbindungselement

Type A

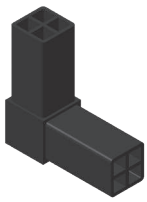

Part	Article-Nr.	Type
418	41801	A

Type B

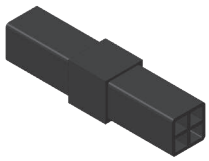

Part	Article-Nr.	Type
418	41802	B

Type C

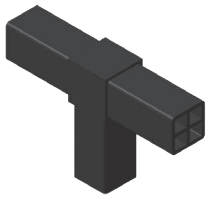

Part	Article-Nr.	Type
418	41803	C

Type D

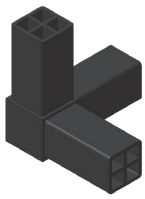

Part	Article-Nr.	Type
418	41804	D

Type E

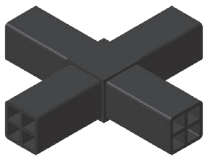

Part	Article-Nr.	Type
418	41805	E

Type F

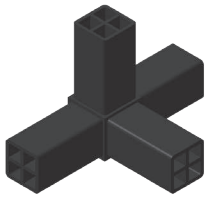

Part	Article-Nr.	Type
418	41806	F

Type G

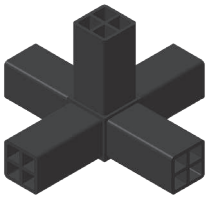

Part	Article-Nr.	Type
418	41807	G

Type H

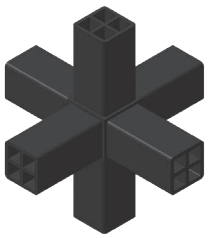

Part	Article-Nr.	Type
418	41808	H

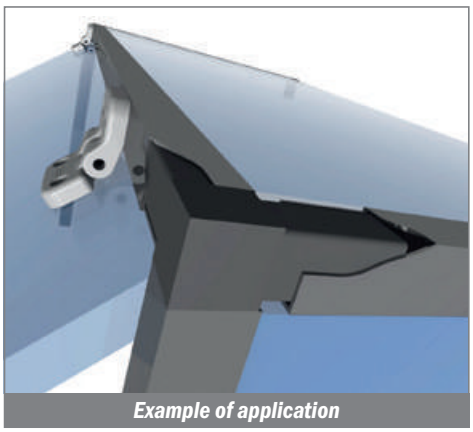

Example of application

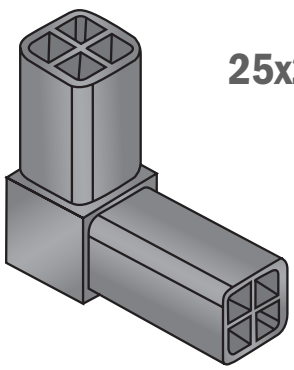

For Tubes
25x25x1.5 mm

Materiale / *Material / Materialien:*
Poliammide / *Polyamide / Polyamid*

421 Blocco per pannelli
Panel clamp / Panelklemme



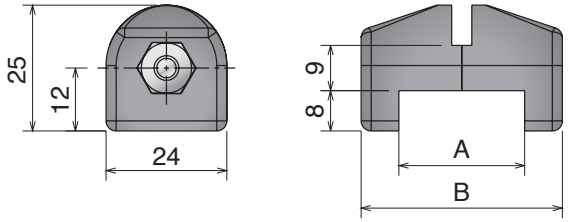

Part	Article-Nr.	A	B	C
421	42101	25	40	4
421	42102	25	40	5
421	42103	25	40	6
421	42104	30	45	4
421	42105	30	45	5
421	42106	30	45	6

422 Fermaporta
Door stop / Türstopper



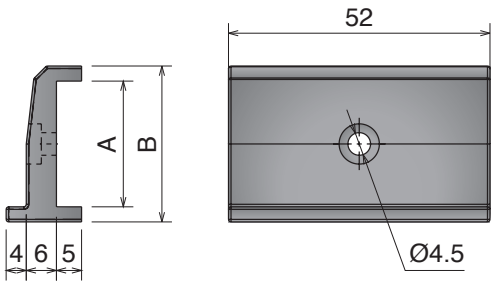

Part	Article-Nr.	A	B
422	42201	25	31

423 Blocchetto di fissaggio
Fixing lock / Anschlag



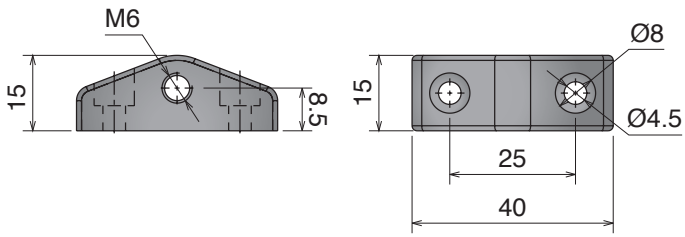

Part	Article-Nr.
423	42301

424 Fermaporta a molla
Spring loaded latch / Türverschluss

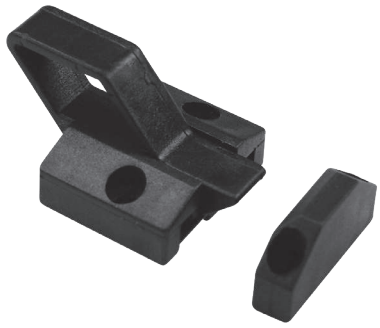

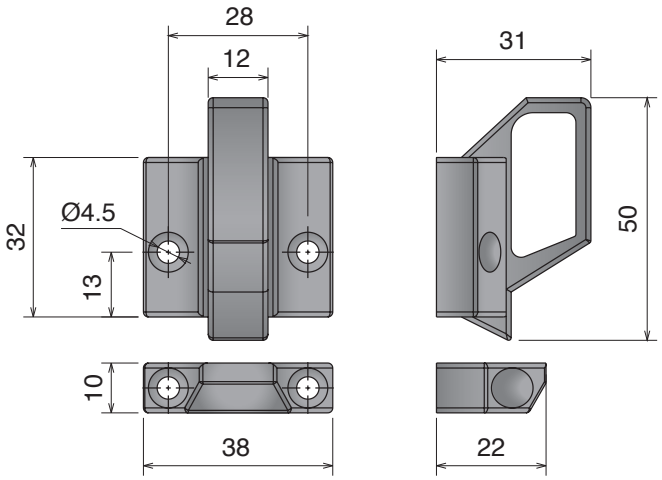

Part	Article-Nr.
424	42401

Movex

429



Bearings supports

UCFL Series



Pag 430

Pag 433

UCF Series



Pag 436

Pag 439

UCFA Series



Pag 442

UCFA Series



Pag 444

UCFL-H / UCF-H Series



Pag 446

CL / CS Series



Pag 448

FL / F / FB / UCT Series



Pag 450

SUCF /SUCFL/SUCFK Series

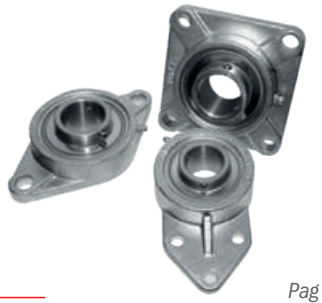

Pag 453

UCFL

Range Extended





Componenti

• Sede in poliammide rinforzato, con elevata resistenza meccanica e ottima resistenza contro agenti chimici corrosivi quali acqua, oli, benzina e liquidi contenenti alcool.Tutti i nostri cuscinetti possono essere utilizzati ad una temperatura compresa fra 0°C e +80°C.

• I cuscinetti sono realizzati in acciaio al cromo, disponibili anche, su richiesta, nella versione in acciaio inox.
Il cuscinetto all'interno della flangia può essere regolato di 2,5°.

• L'ingrassatore viene realizzato in ferro nichelato, o in acciaio inox nella versione con il cuscinetto in acciaio inox.

• Distanziali realizzati in ottone nichelato per rinforzare il foro di fissaggio.

• Rondella in acciaio inox.

Components

• *Housing in reinforced polyamide, with higher load capacity and good resistance to corrosive chemicals such as water, oils, petrol and alcoholic beverages.*
All our bearings can be used at temperatures between 0°C and +80°C.

• *Ball bearings are made in chrome steel. They are also available, upon request , in stainless steel. Max misalignment between shaft and housing: 2.5°.*

• *Grease nipple are made in nickel plated steel, but they can also be made in stainless steel on the stainless steel bearing.*

• *Spacers from nickel plated brass to reinforce fixing holes.*

• *Washer stainless steel.*

Komponenten

• *Gehäuse gefertigt aus verstärktem Polyamid. Dies gewährleistet eine gute Widerstandsfähigkeit gegenüber mechanischen Einflüssen und eine gute Korrosionsbeständigkeit gegenüber Wasser, Ölen, Benzin, Flüssigkeiten mit Alkohol und Chemikalien. Alle unsere Gehäuse-Lagereinheiten können in einem Temperaturbereich von 0°C bis +80°C eingesetzt werden.*

• *Die Lagereinsätze sind aus Chrom-Stahl, auf Anfrage auch in Edelstahl erhältlich. Alle Lager gleichen einen Fluchtungsfehler von bis zu 2,5°selbstständig aus.*

• *Die Schmiernippel sind aus vernickeltem Stahl (aus Edelstahl wenn die Ausführung mit Edelstahl Einsatz gefragt ist).*

• *Alle Distanzstücke sind aus vernickeltem Messing und verstärken die Befestigungsbohrungen.*

• *Alle Unterlegscheiben aus Edelstahl.*

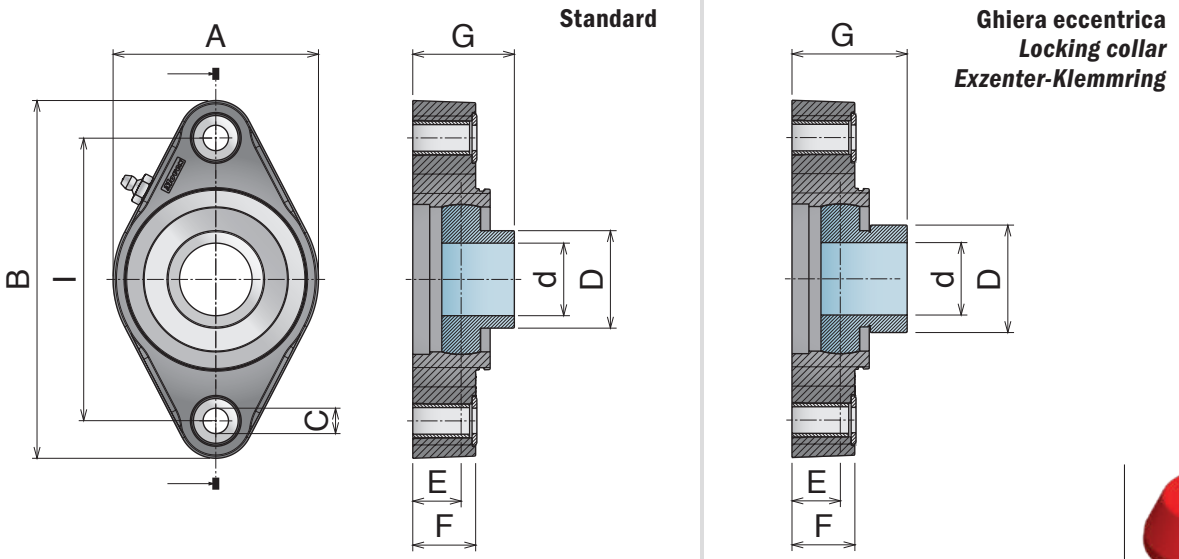



Safety Cap

Inserto standard / *Standard insert / Standard-Flanschlager*

Chrome Steel

Part	Article-Nr.	Series	d	I	A	B	C	D	E	F	G	Article-Nr.
801	80110	UCFL 204	20	90	62	116	11	29	16	20	34	89004
801	80100	UCFL 204	20	90	71	130	11	29	17,5	22,5	33,5	89001
801	80121	UCFL 205/90	25	90	85	116	11	34	14,5	20	34	89005
801	80101	UCFL 205/90	25	90	71	130	11	34	16,8	22,5	36,3	89001
801	80111	UCFL 205	25	99	71	130	11	34	16,8	22,5	36,3	89001
801	80122	UCFL 206/90	30	90	85	116	11	40,3	14,5	20	36,5	89005
801	80132	UCFL 206/99	30	99	85	130	11	40,3	20	26	42	89002
801	80102	UCFL 206/99	30	99	85	148	11	40,3	20	26	42	89002
801	80112	UCFL 206	30	117	85	148	11	40,3	20	26	42	89002
801	80103	UCFL 207/117	35	117	93	148	11	48	19,5	26	43	89003
801	80113	UCFL 207	35	130	93	162	11	48	19,5	26	43	89003
801	80104	UCFL 208/117	40	117	93	148	11	53	19	26	44	89003
801	80114	UCFL 208	40	130	93	162	11	53	19	26	44	89003

Inserto standard / *Standard insert / Standard-Flanschlager*

Stainless Steel

Part	Article-Nr.	Series	d	I	A	B	C	D	E	F	G	Article-Nr.
801	80110SS	UCFL 204	20	90	62	116	11	29	16	20	34	89004
801	80100SS	UCFL 204	20	90	71	130	11	29	17,5	22,5	33,5	89001
801	80121SS	UCFL 205/90	25	90	85	116	11	34	14,5	20	34	89005
801	80101SS	UCFL 205/90	25	90	71	130	11	34	16,8	22,5	36,3	89001
801	80111SS	UCFL 205	25	99	71	130	11	34	16,8	22,5	36,3	89001
801	80122SS	UCFL 206/90	30	90	85	116	11	40,3	14,5	20	36,5	89005
801	80132SS	UCFL 206/99	30	99	85	130	11	40,3	20	26	42	89002
801	80102SS	UCFL 206/99	30	99	85	148	11	40,3	20	26	42	89002
801	80112SS	UCFL 206	30	117	85	148	11	40,3	20	26	42	89002
801	80103SS	UCFL 207/117	35	117	93	148	11	48	19,5	26	43	89003
801	80113SS	UCFL 207	35	130	93	162	11	48	19,5	26	43	89003
801	80104SS	UCFL 208/117	40	117	93	148	11	53	19	26	44	89003
801	80114SS	UCFL 208	40	130	93	162	11	53	19	26	44	89003

Inserto con ghiera eccentrica / *Insert with locking collar / Flanschlager mit Exzenter-Klemmring*

Chrome Steel

Part	Article-Nr.	Series	d	I	A	B	C	D	E	F	G	Article-Nr.
802	80210	UCFL 204	20	90	62	116	11	33,3	16	20	39,9	89004
802	80200	UCFL 204	20	90	71	130	11	33,3	17,5	22,5	41,4	89001
802	80221	UCFL 205/90	25	90	85	116	11	38,1	14,5	20	37,9	89005
802	80201	UCFL 205/90	25	90	71	130	11	38,1	16,8	22,5	40,2	89001
802	80211	UCFL 205	25	99	71	130	11	38,1	16,8	22,5	40,2	89001
802	80222	UCFL 206/90	30	90	85	116	11	44,5	14,5	20	42,2	89005
802	80232	UCFL 206/99	30	99	85	130	11	44,5	20	26	47,7	89002
802	80202	UCFL 206/99	30	99	85	148	11	44,5	20	26	47,7	89002
802	80212	UCFL 206	30	117	85	148	11	44,5	20	26	47,7	89002
802	80203	UCFL 207/117	35	117	93	148	11	55,6	19,5	26	49,9	89003
802	80213	UCFL 207	35	130	93	162	11	55,6	19,5	26	49,9	89003
802	80204	UCFL 208/117	40	117	93	148	11	60,3	19	26	53,7	89003
802	80214	UCFL 208	40	130	93	162	11	60,3	19	26	53,7	89003

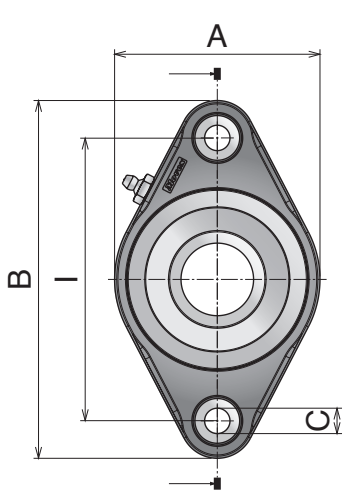

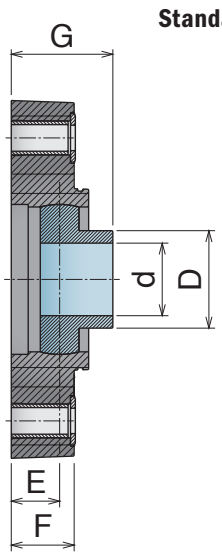

Standard

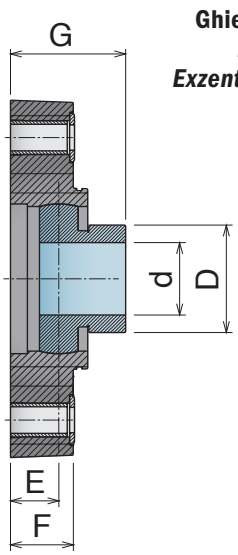

Ghiera eccentrica
Locking collar
Exzenter-Klemmring



Safety Cap

Inserto standard / *Standard insert / Standard-Flanschlager*

	Part	Article-Nr.	Series	d	l	A	B	C	D	E	F	G	Article-Nr.
Chrome Steel	822	82205	UCFL 204/76,5	20	76,4	55,9	100	11	29	15,5	12	33,5	89007
	822	82210	UCFL 204	20	90	62	116	11	29	16	20	34	89004
	822	82201	UCFL 205/90	25	90	71	130	11	34	16,8	22,5	36,3	89001
	822	82211	UCFL 205	25	99	71	130	11	34	16,8	22,5	36,3	89001
	822	82222	UCFL 206/90	30	90	85	116	11	40,3	14,5	20	36,5	89005
	822	82212	UCFL 206	30	117	85	148	11	40,3	20	26	42	89002
	822	82203	UCFL 207/117	35	117	93	148	11	48	19,5	26	43	89003
	822	82213	UCFL 207	35	130	93	162	11	48	19,5	26	43	89003
	822	82204	UCFL 208/117	40	117	93	148	11	53	19	26	44	89003

Inserto standard / *Standard insert / Standard-Flanschlager*

	Part	Article-Nr.	Series	d	l	A	B	C	D	E	F	G	Article-Nr.
Stainless Steel	822	82205SS	UCFL 204/76,5	20	76,4	55,9	100	11	29	15,5	12	33,5	89007
	822	82210SS	UCFL 204	20	90	62	116	11	29	16	20	34	89004
	822	82201SS	UCFL 205/90	25	90	71	130	11	34	16,8	22,5	36,3	89001
	822	82211SS	UCFL 205	25	99	71	130	11	34	16,8	22,5	36,3	89001
	822	82222SS	UCFL 206/90	30	90	85	116	11	40,3	14,5	20	36,5	89005
	822	82212SS	UCFL 206	30	117	85	148	11	40,3	20	26	42	89002
	822	82203SS	UCFL 207/117	35	117	93	148	11	48	19,5	26	43	89003
	822	82213SS	UCFL 207	35	130	93	162	11	48	19,5	26	43	89003
	822	82204SS	UCFL 208/117	40	117	93	148	11	53	19	26	44	89003

Inserto con ghiera eccentrica / *Insert with locking collar / Flanschlager mit Exzenter-Klemmring*

	Part	Article-Nr.	Series	d	l	A	B	C	D	E	F	G	Article-Nr.
Chrome Steel	823	82305	UCFL 204/76,5	20	76,4	55,9	100	11	33,3	16	12	33,5	89007
	823	82310	UCFL 204	20	90	62	116	11	33,3	16	20	39,9	89004
	823	82301	UCFL 205/90	25	90	71	130	11	38,1	16,8	22,5	36,3	89001
	823	82311	UCFL 205	25	99	71	130	11	38,1	16,8	22,5	40,2	89001
	823	82322	UCFL 206/90	30	90	85	116	11	44,5	14,4	20	36,5	89005
	823	82312	UCFL 206	30	117	85	148	11	44,5	20	26	47,7	89002
	823	82303	UCFL 207/117	35	117	93	148	11	55,6	19,5	26	43	89003
	823	82313	UCFL 207	35	130	93	162	11	55,6	19,5	26	49,9	89003
	823	82304	UCFL 208/117	40	117	93	148	11	60,3	19	26	53,7	89003



Solid Housing

UCFL

Range Extended

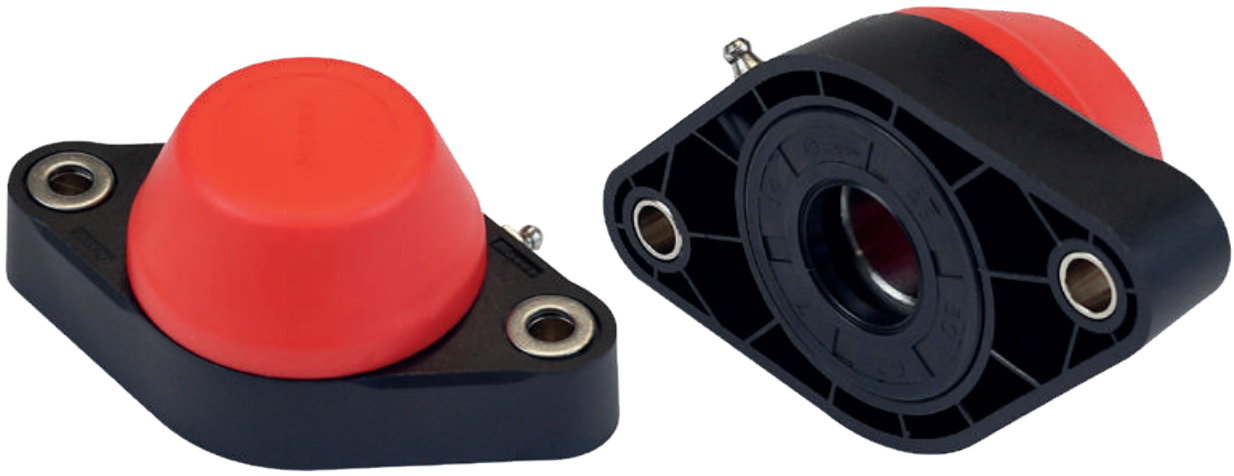

Componenti

- Sede in poliammide rinforzato, con elevata resistenza meccanica e ottima resistenza contro agenti chimici corrosivi quali acqua, oli, benzina e liquidi contenenti alcool. Tutti i nostri cuscinetti possono essere utilizzati ad una temperatura compresa fra 0°C e +80°C.
- I cuscinetti sono realizzati in acciaio al cromo, disponibili anche, su richiesta, nella versione in acciaio inox.
Il cuscinetto all'interno della flangia può essere regolato di 2,5°.
- L'ingrassatore viene realizzato in ferro nichelato, o in acciaio inox nella versione con il cuscinetto in acciaio inox.
- Distanziali realizzati in ottone nichelato per rinforzare il foro di fissaggio.
- Rondella in acciaio inox.
- Coperchio di sicurezza in PP.
- Anello di tenuta in gomma NBR.
- O-ring in NBR rubber.

Components

- *Housing in reinforced polyamide, with higher load capacity and good resistance to corrosive chemicals such as water, oils, petrol and alcoholic beverages.*
All our bearings can be used at temperatures between 0°C and +80°C.
- *Ball bearings are made in chrome steel. They are also available, upon request, in stainless steel. Max misalignment between shaft and housing: 2.5°.*
- *Grease nipple are made in nickel plated steel, but they can also be made in stainless steel on the stainless steel bearing.*
- *Spacers from nickel plated brass to reinforce fixing holes.*
- *Washer stainless steel.*
- *Clip-on safety cap in PP.*
- *Rotary shaft seal ring in NBR rubber.*
- *O-ring in NBR rubber.*

Komponenten

- *Gehäuse gefertigt aus verstärktem Polyamid Dies gewährleistet eine gute Widerstandsfähigkeit gegenüber mechanischen Einflüssen und eine gute Korrosionsbeständigkeit gegenüber Wasser, Ölen, Benzin, Flüssigkeiten mit Alkohol und Chemikalien. Alle unsere Gehäuse-Lagereinheiten können in einem Temperaturbereich von 0°C bis +80°C eingesetzt werden.*
- *Die Lagereinsätze sind aus Chrom-Stahl, auf Anfrage auch in Edelstahl erhältlich. Alle Lager gleichen eine Fluchtungsfehler von bis zu 2,5° selbstständig aus.*
- *Die Schmiernippel sind aus vernickeltem Stahl (aus Edelstahl wenn die Ausführung mit Edelstahl Einsatz gefragt ist).*
- *Alle Distanzstücke sind aus vernickeltem Messing und verstärkten die Befestigungsbohrungen.*
- *Alle Unterlegscheiben aus Edelstahl.*
- *Schutzkappe aus PP.*
- *Dichtringe aus NBR-Gummi.*
- *O-Ringe aus NBR-Gummi.*

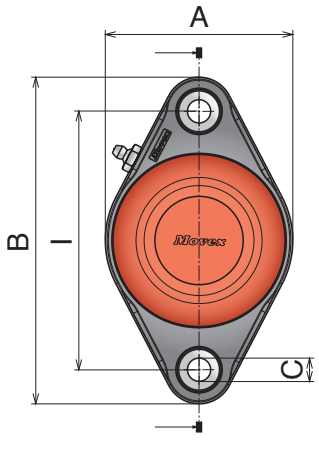

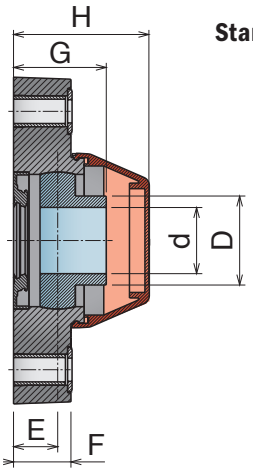

Standard

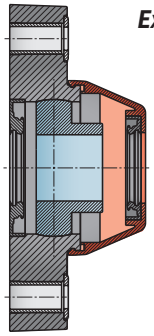

Ghiera eccentrica
Locking collar
Exzenter-Klemmring

Inserto standard, con guarnizioni, versione aperta e chiusa / *Standard insert, sealed, open and close version / Standard-Flanschlager, abgedichtet, offene und geschlossene Version*

Chrome Steel

Part	Art-close	Part	Art-open	Series	d	l	A	B	C	D	E	F	G	H
803	80310	804	80410	UCFL 204	20	90	62	116	11	29	16	20	34	51,5
803	80300	804	80400	UCFL 204	20	90	71	130	11	29	17,5	22,5	33,5	52
803	80321	804	80421	UCFL 205/90	25	90	85	116	11	34	14,5	20	34	55,5
803	80301	804	80401	UCFL 205/90	25	90	71	130	11	34	16,8	22,5	36,3	52
803	80311	804	80411	UCFL 205	25	99	71	130	11	34	16,8	22,5	36,3	52
803	80322	804	80422	UCFL 206/90	30	90	85	116	11	40,3	14,5	20	36,5	55,5
803	80332	804	80432	UCFL 206/99	30	99	85	130	11	40,3	20	26	42	61,5
803	80302	804	80402	UCFL 206/99	30	99	85	148	11	40,3	20	26	42	61,5
803	80312	804	80412	UCFL 206	30	117	85	148	11	40,3	20	26	42	61,5
803	80303	804	80403	UCFL 207/117	35	117	93	148	11	48	19,5	26	43	66,5
803	80313	804	80413	UCFL 207	35	130	93	162	11	48	19,5	26	43	66,5
803	80304	804	80404	UCFL 208/117	40	117	93	148	11	53	19	26	44	66,5
803	80314	804	80414	UCFL 208	40	130	93	162	11	53	19	26	44	66,5

Inserto standard, con guarnizioni, versione aperta e chiusa / *Standard insert, sealed, open and close version / Standard-Flanschlager, abgedichtet, offene und geschlossene Version*

Stainless Steel

Part	Art-close	Part	Art-open	Series	d	l	A	B	C	D	E	F	G	H
803	80310SS	804	80410SS	UCFL 204	20	90	62	116	11	29	16	20	34	51,5
803	80300SS	804	80400SS	UCFL 204	20	90	71	130	11	29	17,5	22,5	33,5	52
803	80321SS	804	80421SS	UCFL 205/90	25	90	85	116	11	34	14,5	20	34	55,5
803	80301SS	804	80401SS	UCFL 205/90	25	90	71	130	11	34	16,8	22,5	36,3	52
803	80311SS	804	80411SS	UCFL 205	25	99	71	130	11	34	16,8	22,5	36,3	52
803	80322SS	804	80422SS	UCFL 206/90	30	90	85	116	11	40,3	14,5	20	36,5	55,5
803	80332SS	804	80432SS	UCFL 206/99	30	99	85	130	11	40,3	20	26	42	61,5
803	80302SS	804	80402SS	UCFL 206/99	30	99	85	148	11	40,3	20	26	42	61,5
803	80312SS	804	80412SS	UCFL 206	30	117	85	148	11	40,3	20	26	42	61,5
803	80303SS	804	80403SS	UCFL 207/117	35	117	93	148	11	48	19,5	26	43	66,5
803	80313SS	804	80413SS	UCFL 207	35	130	93	162	11	48	19,5	26	43	66,5
803	80304SS	804	80404SS	UCFL 208/117	40	117	93	148	11	53	19	26	44	66,5
803	80314SS	804	80414SS	UCFL 208	40	130	93	162	11	53	19	26	44	66,5

Inserto “long life”, con guarnizioni, versione aperta e chiusa / *“Long life” insert, sealed, open and close version / “Long Life”-Flanschlager, abgedichtet, offene und geschlossene Version*

Chrome Steel “Long life”

Part	Art-close	Part	Art-open	Series	d	l	A	B	C	D	E	F	G	H
803	80310L	804	80410L	UCFL 204	20	90	62	116	11	29	16	20	34	51,5
803	80300L	804	80400L	UCFL 204	20	90	71	130	11	29	17,5	22,5	33,5	52
803	80321L	804	80421L	UCFL 205/90	25	90	85	116	11	34	14,5	20	34	55,5
803	80301L	804	80401L	UCFL 205/90	25	90	71	130	11	34	16,8	22,5	36,3	52
803	80311L	804	80411L	UCFL 205	25	99	71	130	11	34	16,8	22,5	36,3	52
803	80322L	804	80422L	UCFL 206/90	30	90	85	116	11	40,3	14,5	20	36,5	55,5
803	80332L	804	80432L	UCFL 206/99	30	99	85	130	11	40,3	20	26	42	61,5
803	80302L	804	80402L	UCFL 206/99	30	99	85	148	11	40,3	20	26	42	61,5
803	80312L	804	80412L	UCFL 206	30	117	85	148	11	40,3	20	26	42	61,5
803	80303L	804	80403L	UCFL 207/117	35	117	93	148	11	48	19,5	26	43	66,5
803	80313L	804	80413L	UCFL 207	35	130	93	162	11	48	19,5	26	43	66,5
803	80304L	804	80404L	UCFL 208/117	40	117	93	148	11	53	19	26	44	66,5
803	80314L	804	80414L	UCFL 208	40	130	93	162	11	53	19	26	44	66,5

Inserto con ghiera eccentrica, guarnizioni, versione aperta e chiusa / *Insert with locking collar, sealed, open and close version / Flanschlager mit Exzenter-Klemmring, abgedichtet, offene und geschlossene Version*

Chrome Steel

Part	Art-close	Part	Art-open	Series	d	l	A	B	C	D	E	F	G	H
805	80510	806	80610	UCFL 204	20	90	62	116	11	33,3	16	20	39,9	51,5
805	80500	806	80600	UCFL 204	20	90	71	130	11	33,3	17,5	22,5	41,4	52
805	80521	806	80621	UCFL 205/90	25	90	85	116	11	38,1	14,5	20	37,9	55,5
805	80501	806	80601	UCFL 205/90	25	90	71	130	11	38,1	16,8	22,5	40,2	52
805	80511	806	80611	UCFL 205	25	99	71	130	11	38,1	16,8	22,5	40,2	52
805	80522	806	80622	UCFL 206/90	30	90	85	116	11	44,5	14,5	20	42,2	55,5
805	80532	806	80632	UCFL 206/99	30	99	85	130	11	44,5	20	26	47,7	61,5
805	80502	806	80602	UCFL 206/99	30	99	85	148	11	44,5	20	26	47,7	61,5
805	80512	806	80612	UCFL 206	30	117	85	148	11	44,5	20	26	47,7	61,5
805	80503	806	80603	UCFL 207/117	35	117	93	148	11	55,6	19,5	26	49,9	66,5
805	80513	806	80613	UCFL 207	35	130	93	162	11	55,6	19,5	26	49,9	66,5
805	80504	806	80604	UCFL 208/117	40	117	93	148	11	60,3	19	26	53,7	66,5
805	80514	806	80614	UCFL 208	40	130	93	162	11	60,3	19	26	53,7	66,5

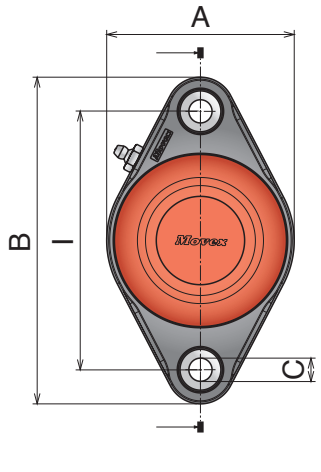

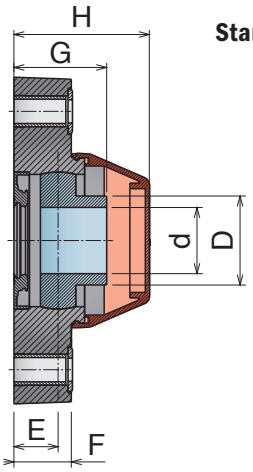

Standard

Ghiera eccentrica
Locking collar
Exzenter-Klemmring

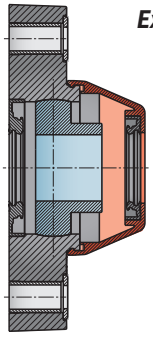



Solid Housing

Inserto standard, con guarnizioni, versione aperta e chiusa / *Standard insert, sealed, open and close version / Standard-Flanschlager, abgedichtet, offene und geschlossene Version*

Chrome Steel

Part	Art-close	Part	Art-open	Series	d	I	A	B	C	D	E	F	G	H
824	82405	825	82505	UCFL 204/76,5	20	76,5	56	100	11	29	15,5	12	26	49
824	82410	825	82510	UCFL 204	20	90	62	116	11	29	16	20	34	51,5
824	82401	825	82501	UCFL 205/90	25	90	71	130	11	34	16,8	22,5	36,3	52
824	82411	825	82511	UCFL 205	25	99	71	130	11	34	16,8	22,5	36,3	52
824	82422	825	82522	UCFL 206/90	30	90	85	116	11	40,3	14,5	20	36,5	55,5
824	82412	825	82512	UCFL 206	30	117	85	148	11	40,3	20	26	42	61,5
824	82403	825	82503	UCFL 207/117	35	117	93	148	11	48	19,5	26	43	66,5
824	82413	825	82513	UCFL 207	35	130	93	162	11	48	19,5	26	43	66,5
824	82404	825	82504	UCFL 208/117	40	117	93	148	11	53	19	26	44	66,5

Inserto standard, con guarnizioni, versione aperta e chiusa / *Standard insert, sealed, open and close version / Standard-Flanschlager, abgedichtet, offene und geschlossene Version*

Stainless Steel

Part	Art-close	Part	Art-open	Series	d	I	A	B	C	D	E	F	G	H
824	82405SS	825	82505SS	UCFL 204/76,5	20	76,5	56	100	11	29	15,5	12	26	49
824	82410SS	825	82510SS	UCFL 204	20	90	62	116	11	29	16	20	34	51,5
824	82401SS	825	82501SS	UCFL 205/90	25	90	71	130	11	34	16,8	22,5	36,3	52
824	82411SS	825	82511SS	UCFL 205	25	99	71	130	11	34	16,8	22,5	36,3	52
824	82422SS	825	82522SS	UCFL 206/90	30	90	85	116	11	40,3	14,5	20	36,5	55,5
824	82412SS	825	82512SS	UCFL 206	30	117	85	148	11	40,3	20	26	42	61,5
824	82403SS	825	82503SS	UCFL 207/117	35	117	93	148	11	48	19,5	26	43	66,5
824	82413SS	825	82513SS	UCFL 207	35	130	93	162	11	48	19,5	26	43	66,5
824	82404SS	825	82504SS	UCFL 208/117	40	117	93	148	11	53	19	26	44	66,5

Inserto "long life", con guarnizioni, versione aperta e chiusa / *"Long life" insert, sealed, open and close version / "Long Life"-Flanschlager, abgedichtet, offene und geschlossene Version*

"Long life"

Part	Art-close	Part	Art-open	Series	d	I	A	B	C	D	E	F	G	H
824	82405L	825	82505L	UCFL 204/76,5	20	76,5	56	100	11	29	15,5	12	26	49
824	82410L	825	82510L	UCFL 204	20	90	62	116	11	29	16	20	34	51,5
824	82401L	825	82501L	UCFL 205/90	25	90	71	130	11	34	16,8	22,5	36,3	52
824	82411L	825	82511L	UCFL 205	25	99	71	130	11	34	16,8	22,5	36,3	52
824	82422L	825	82522L	UCFL 206/90	30	90	85	116	11	40,3	14,5	20	36,5	55,5
824	82412L	825	82512L	UCFL 206	30	117	85	148	11	40,3	20	26	42	61,5
824	82403L	825	82503L	UCFL 207/117	35	117	93	148	11	48	19,5	26	43	66,5
824	82413L	825	82513L	UCFL 207	35	130	93	162	11	48	19,5	26	43	66,5
824	82404L	825	82504L	UCFL 208/117	40	117	93	148	11	53	19	26	44	66,5

Inserto con ghiera eccentrica, guarnizioni, versione aperta e chiusa / *Insert with locking collar, sealed, open and close version / Flanschlager mit Exzenter-Klemmring, abgedichtet, offene und geschlossene Version*

Chrome Steel

Part	Art-close	Part	Art-open	Series	d	I	A	B	C	D	E	F	G	H
826	82605	827	82705	UCFL 204/76,5	20	76,5	56	100	11	33,3	15,5	12	39,4	49
826	82610	827	82710	UCFL 204	20	90	62	116	11	33,3	16	20	39,9	51,5
826	82601	827	82701	UCFL 205/90	25	90	71	130	11	38,1	16,8	22,5	40,2	52
826	82611	827	82711	UCFL 205	25	99	71	130	11	38,1	16,8	22,5	40,2	52
826	82622	827	82722	UCFL 206/90	30	90	85	116	11	44,5	14,5	20	42,2	55,5
826	82612	827	82712	UCFL 206	30	117	85	148	11	44,5	20	26	47,7	61,5
826	82603	827	82703	UCFL 207/117	35	117	93	148	11	55,6	19,5	26	49,9	66,5
826	82613	827	82713	UCFL 207	35	130	93	162	11	55,6	19,5	26	49,9	66,5
826	82604	827	82704	UCFL 208/117	40	117	93	148	11	60,3	19	26	53,7	66,5

UCF

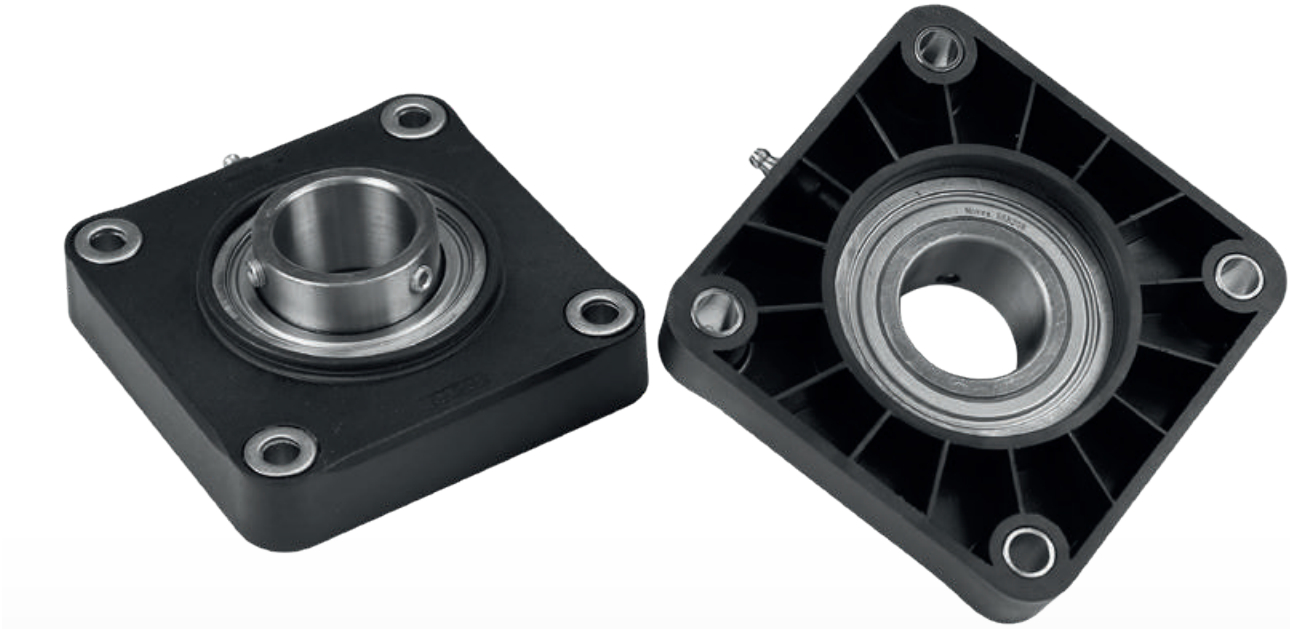

Componenti

• Sede in poliammide rinforzato, con elevata resistenza meccanica e ottima resistenza contro agenti chimici corrosivi quali acqua, oli, benzina e liquidi contenenti alcool. Tutti i nostri cuscinetti possono essere utilizzati ad una temperatura compresa fra 0°C e +80°C.

• I cuscinetti sono realizzati in acciaio al cromo, disponibili anche, su richiesta, nella versione in acciaio inox.
Il cuscinetto all'interno della flangia può essere regolato di 2,5°.

• L'ingrassatore viene realizzato in ferro nichelato, o in acciaio inox nella versione con il cuscinetto in acciaio inox.

• Distanziali realizzati in ottone nichelato per rinforzare il foro di fissaggio.

• Rondella in acciaio inox.

Components

• *Housing in reinforced polyamide, with higher load capacity and good resistance to corrosive chemicals such as water, oils, petrol and alcoholic beverages.*
All our bearings can be used at temperatures between 0°C and +80°C.

• *Ball bearings are made in chrome steel. They are also available, upon request , in stainless steel. Max misalignment between shaft and housing: 2.5°.*

• *Grease nipple are made in nickel plated steel, but they can also be made in stainless steel on the stainless steel bearing.*

• *Spacers from nickel plated brass to reinforce fixing holes.*

• *Washer stainless steel.*

Komponenten

• *Gehäuse gefertigt aus verstärktem Polyamid. Dies gewährleistet eine gute Widerstandsfähigkeit gegenüber mechanischen Einflüssen und eine gute Korrosionsbeständigkeit gegenüber Wasser, Ölen, Benzin, Flüssigkeiten mit Alkohol und Chemikalien. Alle unsere Gehäuse-Lagereinheiten können in einem Temperaturbereich von 0°C bis +80°C eingesetzt werden.*

• *Die Lagereinsätze sind aus Chrom-Stahl, auf Anfrage auch in Edelstahl erhältlich. Alle Lager gleichen einen Fluchtungsfehler von bis zu 2,5°selbstständig aus.*

• *Die Schmiernippel sind aus vernickeltem Stahl (aus Edelstahl wenn die Ausführung mit Edelstahl Einsatz gefragt ist).*

• *Alle Distanzstücke sind aus vernickeltem Messing und verstärken die Befestigungsbohrungen.*

• *Alle Unterlegscheiben aus Edelstahl.*

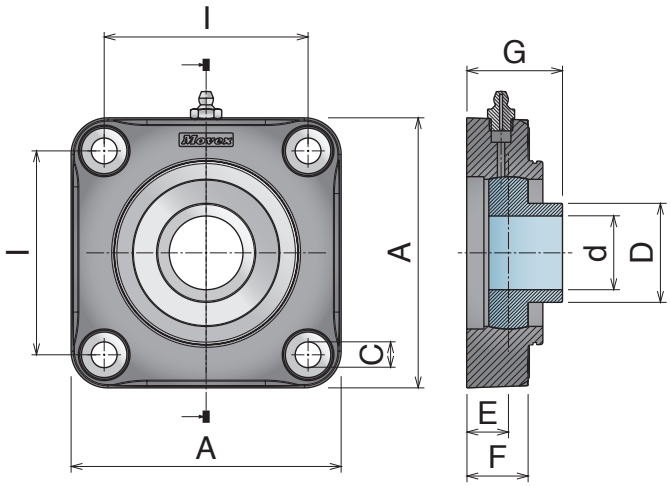



Safety Cap

Inserto standard / *Standard insert / Standard-Flanschlager*

	Part	Article-Nr.	Series	d	I	A	C	D	E	F	G	Article-Nr.
Chrome Steel	807	80701	UCF 205	25	70	98	11	34	16	22	35,5	89001
	807	80702	UCF 206	30	83	110	11	40,3	17	25	39	89002
	807	80703	UCF 207/83	35	83	110	11	48	20	25	43,5	89003
	807	80713	UCF 207	35	92	118	11	48	20	25	43,5	89003
	807	80704	UCF 208/83	40	83	110	11	53	19,5	25	44,5	89003
	807	80714	UCF 208	40	102	130	11	53	19	25	44	89003

Inserto standard / *Standard insert / Standard-Flanschlager*

	Part	Article-Nr.	Series	d	I	A	C	D	E	F	G	Article-Nr.
Stainless Steel	807	80701SS	UCF 205	25	70	98	11	34	16	22	35,5	89001
	807	80702SS	UCF 206	30	83	110	11	40,3	17	25	39	89002
	807	80703SS	UCF 207/83	35	83	110	11	48	20	25	43,5	89003
	807	80713SS	UCF 207	35	92	118	11	48	20	25	43,5	89003
	807	80704SS	UCF 208/83	40	83	110	11	53	19,5	25	44,5	89003
	807	80714SS	UCF 208	40	102	130	11	53	19	25	44	89003

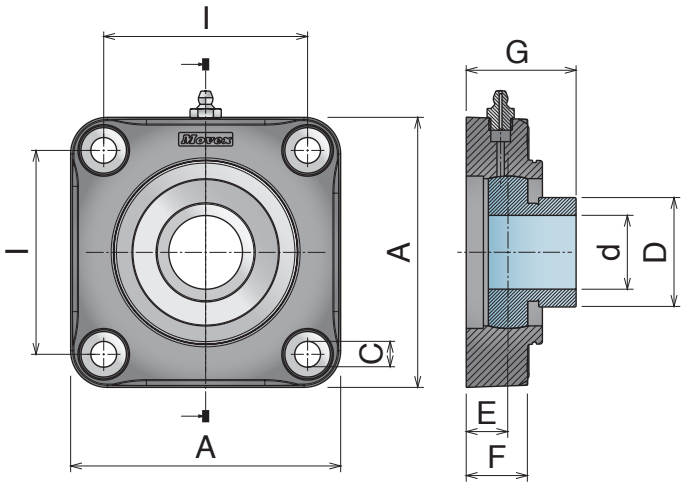



Safety Cap

Inserto con ghiera eccentrica / *Insert with locking collar / Flanschlager mit Exzenter-Klemmring*

	Part	Article-Nr.	Series	d	I	A	C	D	E	F	G	Article-Nr.
Chrome Steel	808	80801	UCF 205	25	70	98	11	38,1	16	22	39,4	89001
	808	80802	UCF 206	30	83	110	11	44,5	17	25	44,7	89002
	808	80803	UCF 207/83	35	83	110	11	55,6	20	25	50,4	89003
	808	80813	UCF 207	35	92	118	11	55,6	20	25	50,4	89003
	808	80804	UCF 208/83	40	83	110	11	60,3	19,5	25	54,2	89003
	808	80814	UCF 208	40	102	130	11	60,3	19	25	53,7	89003

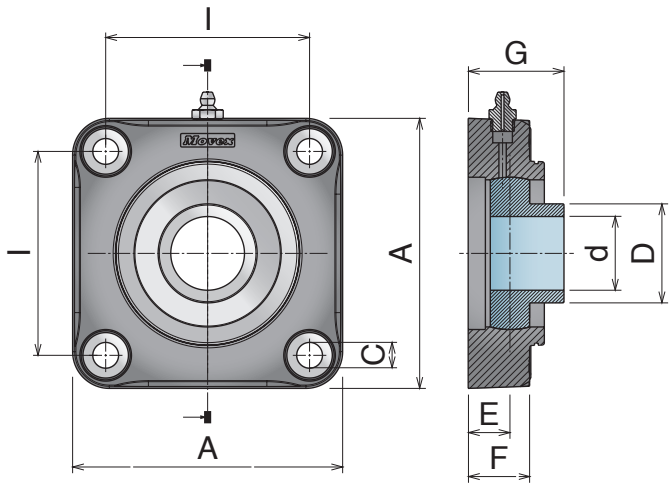





Safety Cap

Inserto standard / *Standard insert / Standard-Flanschlager*

	Part	Article-Nr.	Series	d	l	A	C	D	E	F	G	Article-Nr.
Chrome Steel	828	82801	UCF 205	25	70	98	11	34	16	22	35,5	89001
	828	82802	UCF 206	30	83	110	11	40,3	17	25	39	89002
	828	82813	UCF 207	35	92	118	11	48	20	25	43,5	89003
	828	82804	UCF 208/83	40	83	110	11	53	19,5	25	44,5	89003

Inserto standard / *Standard insert / Standard-Flanschlager*

	Part	Article-Nr.	Series	d	l	A	C	D	E	F	G	Article-Nr.
Stainless Steel	828	82801SS	UCF 205	25	70	98	11	34	16	22	35,5	89001
	828	82802SS	UCF 206	30	83	110	11	40,3	17	25	39	89002
	828	82813SS	UCF 207	35	92	118	11	48	20	25	43,5	89003
	828	82804SS	UCF 208/83	40	83	110	11	53	19,5	25	44,5	89003

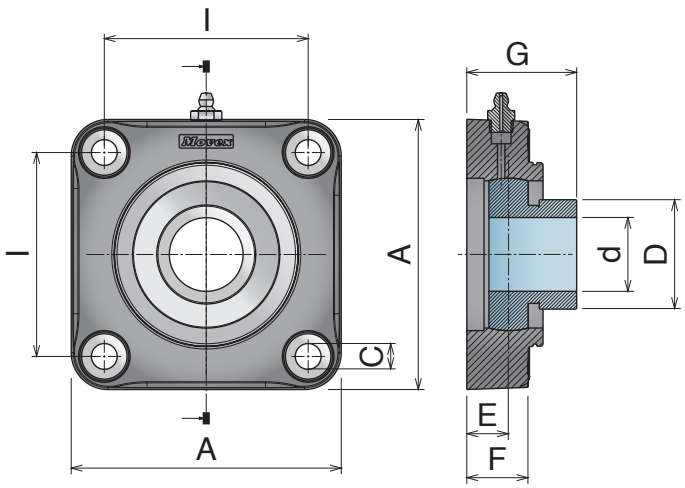



Safety Cap

Inserto con ghiera eccentrica / *Insert with locking collar / Flanschlager mit Exzenter-Klemmring*

	Part	Article-Nr.	Series	d	l	A	C	D	E	F	G	Article-Nr.
Chrome Steel	829	82901	UCF 205	25	70	98	11	38,1	16	22	39,4	89001
	829	82902	UCF 206	30	83	110	11	44,5	17	25	44,7	89002
	829	82913	UCF 207	35	92	118	11	55,6	20	25	50,4	89003
	829	82904	UCF 208/83	40	83	110	11	60,3	19,5	25	54,2	89003

UCF



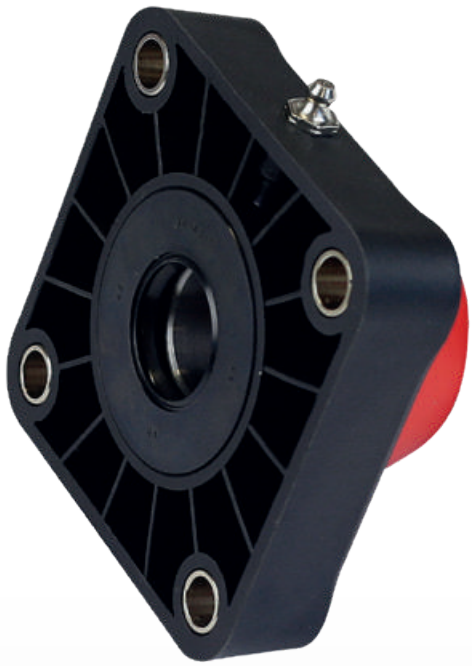

Componenti

• Sede in poliammide rinforzato, con elevata resistenza meccanica e ottima resistenza contro agenti chimici corrosivi quali acqua, oli, benzina e liquidi contenenti alcool. Tutti i nostri cuscinetti possono essere utilizzati ad una temperatura compresa fra 0°C e +80°C.

• I cuscinetti sono realizzati in acciaio al cromo, disponibili anche, su richiesta, nella versione in acciaio inox.
Il cuscinetto all'interno della flangia può essere regolato di 2,5°.

• L'ingrassatore viene realizzato in ferro nichelato, o in acciaio inox nella versione con il cuscinetto in acciaio inox.

• Distanziali realizzati in ottone nichelato per rinforzare il foro di fissaggio.

• Rondella in acciaio inox.

• Coperchio di sicurezza in PP.

• Anello di tenuta in gomma NBR.

• O-ring in NBR rubber.

Components

• *Housing in reinforced polyamide, with higher load capacity and good resistance to corrosive chemicals such as water, oils, petrol and alcoholic beverages.*
All our bearings can be used at temperatures between 0°C and +80°C.

• *Ball bearings are made in chrome steel. They are also available, upon request, in stainless steel. Max misalignment between shaft and housing: 2.5°.*

• *Grease nipple are made in nickel plated steel, but they can also be made in stainless steel on the stainless steel bearing.*

• *Spacers from nickel plated brass to reinforce fixing holes.*

• *Washer stainless steel.*

• *Clip-on safety cap in PP.*

• *Rotary shaft seal ring in NBR rubber.*

• *O-ring in NBR rubber.*

Komponenten

• *Gehäuse gefertigt aus verstärktem Polyamid Dies gewährleistet eine gute Widerstandsfähigkeit gegenüber mechanischen Einflüssen und eine gute Korrosionsbeständigkeit gegenüber Wasser, Ölen, Benzin, Flüssigkeiten mit Alkohol und Chemikalien. Alle unsere Gehäuse-Lagereinheiten können in einem Temperaturbereich von 0°C bis +80°C eingesetzt werden.*

• *Die Lagereinsätze sind aus Chrom-Stahl, auf Anfrage auch in Edelstahl erhältlich. Alle Lager gleichen eine Fluchtungsfehler von bis zu 2,5° selbstständig aus.*

• *Die Schmiernippel sind aus vernickeltem Stahl (aus Edelstahl wenn die Ausführung mit Edelstahl Einsatz gefragt ist).*

• *Alle Distanzstücke sind aus vernickeltem Messing und verstärkten die Befestigungsbohrungen.*

• *Alle Unterlegscheiben aus Edelstahl.*

• *Schutzkappe aus PP.*

• *Dichtringe aus NBR-Gummi.*

• *O-Ringe aus NBR-Gummi.*

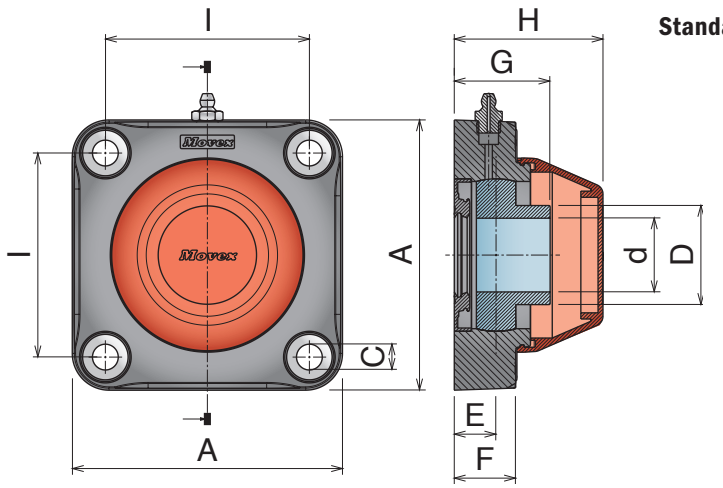

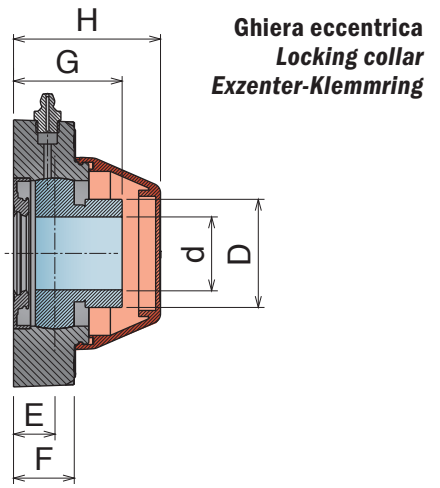

Inserto standard, con guarnizioni, versione aperta e chiusa
Standard insert, sealed, open and close version/Standard-Flanschlager, abgedichtet, offene und geschlossene Version

Chrome Steel

Part	Art-close	Part	Art-open	Series	d	I	A	C	D	E	F	G	H
809	80901	810	81001	UCF 205	25	70	98	11	34	16	22	35,5	51,5
809	80902	810	81002	UCF 206	30	83	110	11	40,3	17	25	39	60,5
809	80903	810	81003	UCF 207/83	35	83	110	11	48	20	25	43,5	65,5
809	80913	810	81013	UCF 207	35	92	118	11	48	20	25	43,5	65,5
809	80904	810	81004	UCF 208/83	40	83	110	11	53	19,5	25	44,5	65,5
809	80914	810	81014	UCF 208	40	102	130	11	53	19	25	44	65,5

Inserto standard, con guarnizioni, versione aperta e chiusa
Standard insert, sealed, open and close version/Standard-Flanschlager, abgedichtet, offene und geschlossene Version

Stainless Steel

Part	Art-close	Part	Art-open	Series	d	I	A	C	D	E	F	G	H
809	80901SS	810	81001SS	UCF 205	25	70	98	11	34	16	22	35,5	51,5
809	80902SS	810	81002SS	UCF 206	30	83	110	11	40,3	17	25	39	60,5
809	80903SS	810	81003SS	UCF 207/83	35	83	110	11	48	20	25	43,5	65,5
809	80913SS	810	81013SS	UCF 207	35	92	118	11	48	20	25	43,5	65,5
809	80904SS	810	81004SS	UCF 208/83	40	83	110	11	53	19,5	25	44,5	65,5
809	80914SS	810	81014SS	UCF 208	40	102	130	11	53	19	25	44	65,5

Inserto "Long life", con guarnizioni, versione aperta e chiusa
"Long life" insert, sealed, open and close version/"Long life"-Flanschlager, abgedichtet, offene und geschlossene Version

"Long life"

Part	Art-close	Part	Art-open	Series	d	I	A	C	D	E	F	G	H
809	80901L	810	81001L	UCF 205	25	70	98	11	34	16	22	35,5	51,5
809	80902L	810	81002L	UCF 206	30	83	110	11	40,3	17	25	39	60,5
809	80903L	810	81003L	UCF 207/83	35	83	110	11	48	20	25	43,5	65,5
809	80913L	810	81013L	UCF 207	35	92	118	11	48	20	25	43,5	65,5
809	80904L	810	81004L	UCF 208/83	40	83	110	11	53	19,5	25	44,5	65,5
809	80914L	810	81014L	UCF 208	40	102	130	11	53	19	25	44	65,5

Inserto con ghiera eccentrica, guarnizioni, versione aperta e chiusa
Insert with locking collar, sealed, open and close version/Flanschlager mit Exzenter-Klemmring, abgedichtet, offene und geschlossene Version

Chrome Steel

Part	Art-close	Part	Art-open	Series	d	I	A	C	D	E	F	G	H
811	81101	812	81201	UCF 205	25	70	98	11	38,1	16	22	39,4	51,5
811	81102	812	81202	UCF 206	30	83	110	11	44,5	17	25	44,7	60,5
811	81103	812	81203	UCF 207/83	35	83	110	11	55,6	20	25	50,4	65,5
811	81113	812	81213	UCF 207	35	92	118	11	55,6	20	25	50,4	65,5
811	81104	812	81204	UCF 208/83	40	83	110	11	60,3	19,5	25	54,2	65,5
811	81114	812	81214	UCF 208	40	102	130	11	60,3	19	25	53,7	65,5

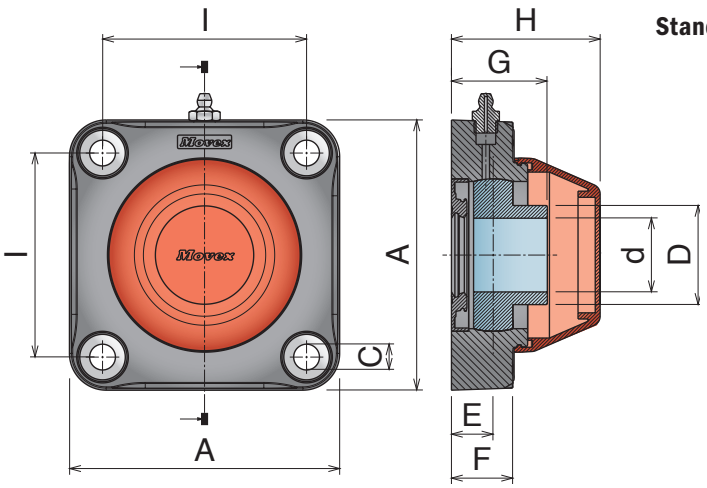

Standard

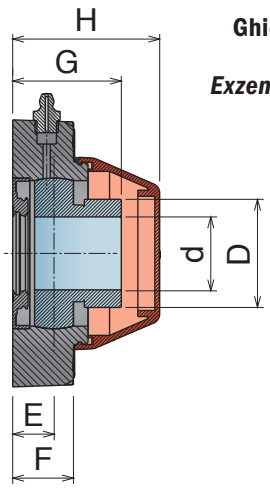

Ghiera eccentrica
Locking collar
Exzenter-Klemmring

Inserto standard, con guarnizioni, versione aperta e chiusa
Standard insert, sealed, open and close version/Standard-Flanschlager, abgedichtet, offene und geschlossene Version

Chrome Steel

Part	Art-close	Part	Art-open	Series	d	I	A	C	D	E	F	G	H
830	83001	831	83101	UCF 205	25	70	98	11	34	16	22	35,5	51,5
830	83002	831	83102	UCF 206	30	83	110	11	40,3	17	25	39	60,5
830	83013	831	83113	UCF 207	35	92	118	11	48	20	25	43,5	65,5
830	83004	831	83104	UCF 208/83	40	83	110	11	53	19,5	25	44,5	65,5

Inserto standard, con guarnizioni, versione aperta e chiusa
Standard insert, sealed, open and close version/Standard-Flanschlager, abgedichtet, offene und geschlossene Version

Stainless Steel

Part	Art-close	Part	Art-open	Series	d	I	A	C	D	E	F	G	H
830	83001SS	831	83101SS	UCF 205	25	70	98	11	34	16	22	35,5	51,5
830	83002SS	831	83102SS	UCF 206	30	83	110	11	40,3	17	25	39	60,5
830	83013SS	831	83113SS	UCF 207	35	92	118	11	48	20	25	43,5	65,5
830	83004SS	831	83104SS	UCF 208/83	40	83	110	11	53	19,5	25	44,5	65,5

Inserto "Long life", con guarnizioni, versione aperta e chiusa
"Long life" insert, sealed, open and close version/"Long life"-Flanschlager, abgedichtet, offene und geschlossene Version

"Long life"

Part	Art-close	Part	Art-open	Series	d	I	A	C	D	E	F	G	H
830	83001L	831	83101L	UCF 205	25	70	98	11	34	16	22	35,5	51,5
830	83002L	831	83102L	UCF 206	30	83	110	11	40,3	17	25	39	60,5
830	83013L	831	83113L	UCF 207	35	92	118	11	48	20	25	43,5	65,5
830	83004L	831	83104L	UCF 208/83	40	83	110	11	53	19,5	25	44,5	65,5

Inserto con ghiera eccentrica, guarnizioni, versione aperta e chiusa
Insert with locking collar, sealed, open and close version/Flanschlager mit Exzenter-Klemmring, abgedichtet, offene und geschlossene Version

Chrome Steel

Part	Art-close	Part	Art-open	Series	d	I	A	C	D	E	F	G	H
832	83201	833	83301	UCF 205	25	70	98	11	38,1	16	22	39,4	51,5
832	83202	833	83302	UCF 206	30	83	110	11	44,5	17	25	44,7	60,5
832	83213	833	83313	UCF 207	35	92	118	11	55,6	20	25	50,4	65,5
832	83204	833	83304	UCF 208/83	40	83	110	11	60,3	19,5	25	54,2	65,5



Solid Housing

UCFA

Solid Housing



Componenti

• Sede in poliammide rinforzato, con elevata resistenza meccanica e ottima resistenza contro agenti chimici corrosivi quali acqua, oli, benzina e liquidi contenenti alcool. Tutti i nostri cuscinetti possono essere utilizzati ad una temperatura compresa fra 0°C e +80°C.

• I cuscinetti sono realizzati in acciaio al cromo, disponibili anche, su richiesta, nella versione in acciaio inox.
Il cuscinetto all'interno della flangia può essere regolato di 2,5°.

• L'ingrassatore viene realizzato in ferro nichelato, o in acciaio inox nella versione con il cuscinetto in acciaio inox.

• Distanziali realizzati in ottone nichelato per rinforzare il foro di fissaggio.

• Rondella in acciaio inox.

Components

*• Housing in reinforced polyamide, with higher load capacity and good resistance to corrosive chemicals such as water, oils, petrol and alcoholic beverages.
All our bearings can be used at temperatures between 0°C and +80°C.*

• Ball bearings are made in chrome steel. They are also available, upon request , in stainless steel. Max misalignment between shaft and housing: 2.5°.

• Grease nipple are made in nickel plated steel, but they can also be made in stainless steel on the stainless steel bearing.

• Spacers from nickel plated brass to reinforce fixing holes.

• Washer stainless steel.

Komponenten

• Gehäuse gefertigt aus verstärktem Polyamid. Dies gewährleistet eine gute Widerstandsfähigkeit gegenüber mechanischen Einflüssen und eine gute Korrosionsbeständigkeit gegenüber Wasser, Ölen, Benzin, Flüssigkeiten mit Alkohol und Chemikalien. Alle unsere Gehäuse-Lagereinheiten können in einem Temperaturbereich von 0°C bis +80°C eingesetzt werden.

• Die Lagereinsätze sind aus Chrom-Stahl, auf Anfrage auch in Edelstahl erhältlich. Alle Lager gleichen einen Fluchtungsfehler von bis zu 2,5°selbstständig aus.

• Die Schmiernippel sind aus vernickeltem Stahl (aus Edelstahl wenn die Ausführung mit Edelstahl Einsatz gefragt ist).

• Alle Distanzstücke sind aus vernickeltem Messing und verstärken die Befestigungsbohrungen.

• Alle Unterlegscheiben aus Edelstahl.

Standard

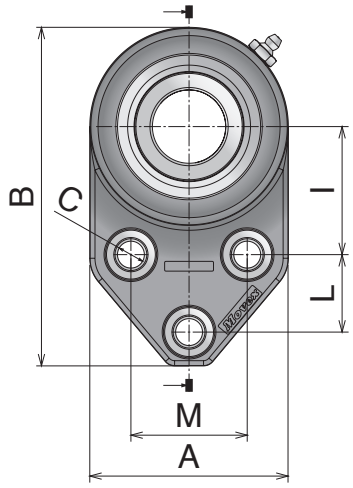

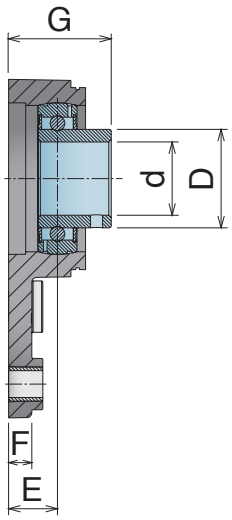

Ghiera eccentrica
Locking collar
Exzenter-Klemmring

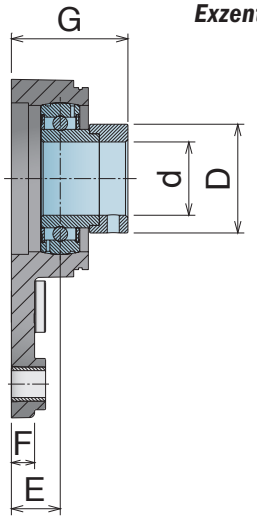



Safety Cap

Inserto standard / *Standard insert / Standard-Flanschlager*

Chrome Steel

Part	Article-Nr.	Series	d	I	A	C	D	L	M	B	E	F	G	Article-Nr.
834	**83400**	UCFA 204	20	46	68,8	11	29	28,6	41,3	124,2	16,4	14	34,4	**89001**
834	**83401**	UCFA 205	25	46	68,8	11	34	28,6	41,3	124,2	17,8	14	37,3	**89001**
834	**83402**	UCFA 206	30	52,4	81,3	11	40,3	31,7	47,6	138,6	20	9,5	42	**89002**

Inserto standard / *Standard insert / Standard-Flanschlager*

Stainless Steel

Part	Article-Nr.	Series	d	I	A	C	D	L	M	B	E	F	G	Article-Nr.
834	**83400SS**	UCFA 204	20	46	68,8	11	29	28,6	41,3	124,2	16,4	14	34,4	**89001**
834	**83401SS**	UCFA 205	25	46	68,8	11	34	28,6	41,3	124,2	17,8	14	37,3	**89001**
834	**83402SS**	UCFA 206	30	52,4	81,3	11	40,3	31,7	47,6	138,6	20	14	42	**89002**

Inserto con ghiera eccentrica / *Insert with locking collar / Flanschlager mit Exzenter-Klemmring*

Chrome Steel

Part	Article-Nr.	Series	d	I	A	C	D	L	M	B	E	F	G	Article-Nr.
835	**83500**	UCFA 204	20	46	68,8	11	33,3	28,6	41,3	124,2	16,4	14	40,3	**89001**
835	**83501**	UCFA 205	25	46	68,8	11	38,1	28,6	41,3	124,2	17,8	14	41,2	**89001**
835	**83502**	UCFA 206	30	52,4	81,3	11	44,5	31,7	47,6	138,6	20	14	47,7	**89002**

UCFA

Solid Housing



Componenti

- Sede in poliammide rinforzato, con elevata resistenza meccanica e ottima resistenza contro agenti chimici corrosivi quali acqua, oli, benzina e liquidi contenenti alcool. Tutti i nostri cuscinetti possono essere utilizzati ad una temperatura compresa fra 0°C e +80°C.
- I cuscinetti sono realizzati in acciaio al cromo, disponibili anche, su richiesta, nella versione in acciaio inox.
  Il cuscinetto all'interno della flangia può essere regolato di 2,5°.
- L'ingrassatore viene realizzato in ferro nichelato, o in acciaio inox nella versione con il cuscinetto in acciaio inox.
- Distanziali realizzati in ottone nichelato per rinforzare il foro di fissaggio.
- Rondella in acciaio inox.
- Coperchio di sicurezza in PP.
- Anello di tenuta in gomma NBR.
- O-ring in NBR rubber.

Components

- *Housing in reinforced polyamide, with higher load capacity and good resistance to corrosive chemicals such as water, oils, petrol and alcoholic beverages.*
  All our bearings can be used at temperatures between 0°C and +80°C.
- *Ball bearings are made in chrome steel. They are also available, upon request, in stainless steel. Max misalignment between shaft and housing: 2.5°.*
- *Grease nipple are made in nickel plated stell, but they can also be made in stainless steel on the stainless steel bearing.*
- *Spacers from nickel plated brass to reinforce fixing holes.*
- *Washer stainless steel.*
- *Clip-on safety cap in PP.*
- *Rotary shaft seal ring in NBR rubber.*
- *O-ring in NBR rubber.*

Komponenten

- *Gehäuse gefertigt aus verstärktem Polyamid Dies gewährleistet eine gute Widerstandsfähigkeit gegenüber mechanischen Einflüssen und eine gute Korrosionsbeständigkeit gegenüber Wasser, Ölen, Benzin, Flüssigkeiten mit Alkohol und Chemikalien. Alle unsere Gehäuse-Lagereinheiten können in einem Temperaturbereich von 0°C bis +80°C eingesetzt werden.*
- *Die Lagereinsätze sind aus Chrom-Stahl, auf Anfrage auch in Edelstahl erhältlich. Alle Lager gleichen eine Fluchtungsfehler von bis zu 2,5° selbstständig aus.*
- *Die Schmiernippel sind aus vernickeltem Stahl (aus Edelstahl wenn die Ausführung mit Edelstahl Einsatz gefragt ist).*
- *Alle Distanzstücke sind aus vernickeltem Messing und verstärkten die Befestigungsbohrungen.*
- *Alle Unterlegscheiben aus Edelstahl.*
- *Schutzkappe aus PP*
- *Dichtringe aus NBR-Gummi*
- *O-Ringe aus NBR-Gummi*

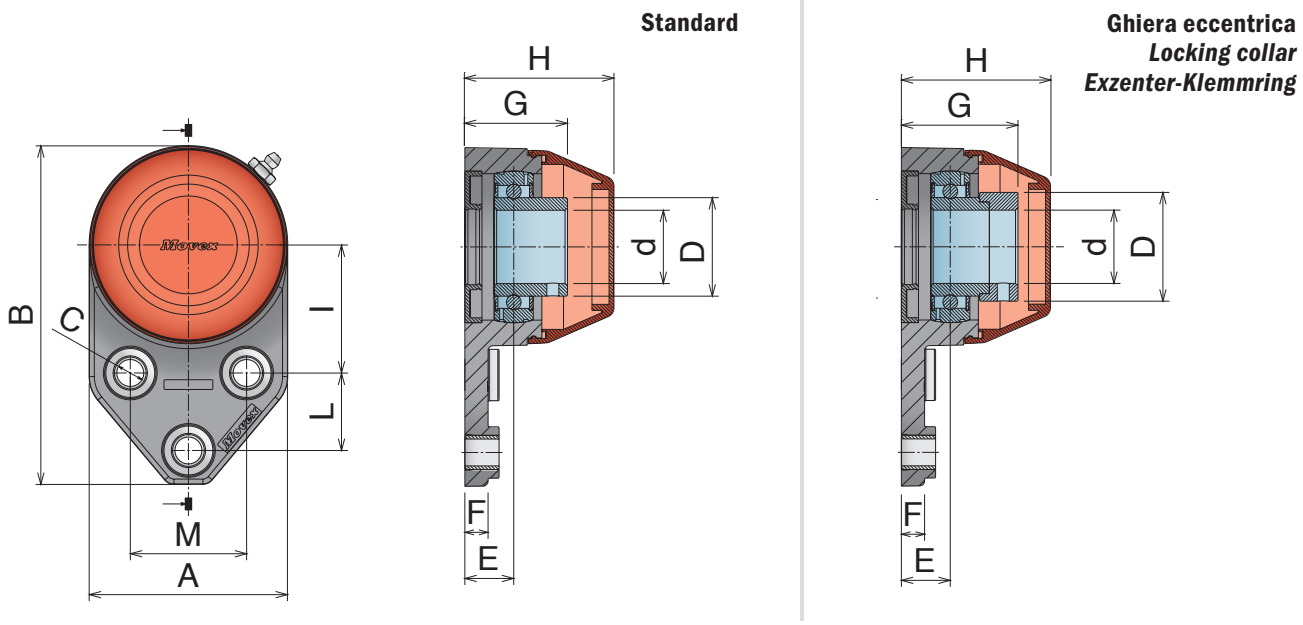

Inserto standard, con guarnizioni, versione aperta e chiusa
Standard insert, sealed, open and close version/Standard-Flanschlager, abgedichtet, offene und geschlossene Version

	Part	Art-close	Part	Art-open	Series	d	I	A	C	D	L	M	B	E	F	G	H
Chrome Steel	836	83600	837	83700	UCF 204	20	46	68,8	11	29	28,6	41,3	124,2	16,4	14	34,4	51,8
	836	83601	837	83701	UCF 205	25	46	68,8	11	34	28,6	41,3	124,2	17,8	14	37,3	51,8
	836	83602	837	83702	UCF 206	30	52,4	81,3	11	40,3	31,7	47,6	138,6	20	14	42	61

Inserto standard, con guarnizioni, versione aperta e chiusa
Standard insert, sealed, open and close version/Standard-Flanschlager, abgedichtet, offene und geschlossene Version

	Part	Art-close	Part	Art-open	Series	d	I	A	C	D	L	M	B	E	F	G	H
Stainless Steel	836	83600SS	837	83700SS	UCF 204	20	46	68,8	11	29	28,6	41,3	124,2	16,4	14	34,4	51,8
	836	83601SS	837	83701SS	UCF 205	25	46	68,8	11	34	28,6	41,3	124,2	17,8	14	37,3	51,8
	836	83602SS	837	83702SS	UCF 206	30	52,4	81,3	11	40,3	31,7	47,6	138,6	20	14	42	61

Inserto "Long life", con guarnizioni, versione aperta e chiusa
"Long life" insert, sealed, open and close version/"Long life"-Flanschlager, abgedichtet, offene und geschlossene Version

	Part	Art-close	Part	Art-open	Series	d	I	A	C	D	L	M	B	E	F	G	H
"Long life"	836	83600L	837	83700L	UCF 204	20	46	68,8	11	29	28,6	41,3	124,2	16,4	14	34,4	51,8
	836	83601L	837	83701L	UCF 205	25	46	68,8	11	34	28,6	41,3	124,2	17,8	14	37,3	51,8
	836	83602L	837	83702L	UCF 206	30	52,4	81,3	11	40,3	31,7	47,6	138,6	20	14	42	61

Inserto con ghiera eccentrica, guarnizioni, versione aperta e chiusa
Insert with locking collar, sealed, open and close version/Flanschlager mit Exzenter-Klemmring, abgedichtet, offene und geschlossene Version

	Part	Art-close	Part	Art-open	Series	d	I	A	C	D	L	M	B	E	F	G	H
Chrome Steel	838	83800	839	83900	UCF 204	20	46	68,8	11	33,3	28,6	41,3	124,2	16,4	14	40,3	51,8
	838	83801	839	83901	UCF 205	25	46	68,8	11	38,1	28,6	41,3	124,2	17,8	14	41,2	51,8
	838	83802	839	83902	UCF 206	30	52,4	81,3	11	44,5	31,7	47,6	138,6	20	14	47,7	61

UCFL-H/UCF-H

Cover in Stainless steel



Componenti

- Sede in poliammide rinforzato, con elevata resistenza meccanica e ottima resistenza contro agenti chimici corrosivi quali acqua, oli, benzina e liquidi contenenti alcool. Tutti i nostri cuscinetti possono essere utilizzati ad una temperatura compresa fra 0°C e +80°C.
- I cuscinetti sono realizzati in acciaio al cromo, disponibili anche, su richiesta, nella versione in acciaio inox.
  Il cuscinetto all'interno della flangia può essere regolato di 2,5°.
- L'ingrassatore viene realizzato in ferro nichelato, o in acciaio inox nella versione con il cuscinetto in acciaio inox.
- Distanziali realizzati in ottone nichelato per rinforzare il foro di fissaggio.
- Rondella in acciaio inox.
- Coperchio di sicurezza in PP.
- **"Cover"** in acciaio inox.

Components

- *Housing in reinforced polyamide, with higher load capacity and good resistance to corrosive chemicals such as water, oils, petrol and alcoholic beverages.*
  All our bearings can be used at temperatures between 0°C and +80°C.
- *Ball bearings are made in chrome steel. They are also available, upon request, in stainless steel. Max misalignment between shaft and housing: 2.5°.*
- *Grease nipple are made in nickel plated steel, but they can also be made in stainless steel on the stainless steel bearing.*
- *Spacers from nickel plated brass to reinforce fixing holes.*
- *Washer stainless steel.*
- ***"Cover"** in stainless steel*

Komponenten

- *Gehäuse gefertigt aus verstärktem Polyamid Dies gewährleistet eine gute Widerstandsfähigkeit gegenüber mechanischen Einflüssen und eine gute Korrosionsbeständigkeit gegenüber Wasser, Ölen, Benzin, Flüssigkeiten mit Alkohol und Chemikalien. Alle unsere Gehäuse-Lagereinheiten können in einem Temperaturbereich von 0°C bis +80°C eingesetzt werden.*
- *Die Lagereinsätze sind aus Chrom-Stahl, auf Anfrage auch in Edelstahl erhältlich. Alle Lager gleichen eine Fluchtungsfehler von bis zu 2,5° selbstständig aus.*
- *Die Schmiernippel sind aus vernickeltem Stahl (aus Edelstahl wenn die Ausführung mit Edelstahl Einsatz gefragt ist).*
- *Alle Distanzstücke sind aus vernickeltem Messing und verstärkten die Befestigungsbohrungen.*
- *Alle Unterlegscheiben aus Edelstahl.*
- *Gehäuseabdeckung aus Edelstahl.*

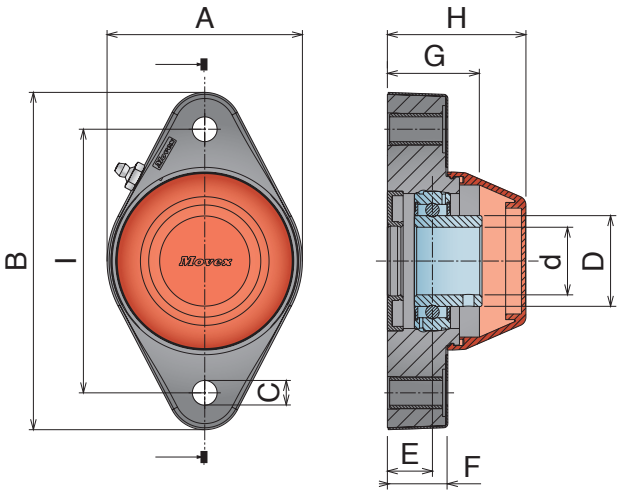

Standard

Ghiera eccentrica
Locking collar
Exzenter-Klemmring

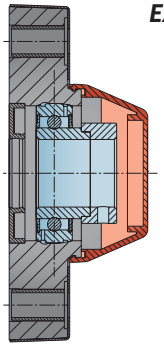

Solid Housing

Inserto standard, con guarnizioni, versione aperta e chiusa / *Standard insert, sealed, open and close version / Standard-Flanschlager, abgedichtet, offene und geschlossene Version*

	Part	Art-close	Part	Art-open	Series	d	I	A	B	C	D	E	F	G	H
Chrome Steel	824	82412H	825	82512H	UCFL-H 206	30	117	86,7	149,7	11	40,3	20	26,85	42	61,5
	824	82403H	825	82503H	UCFL-H 207/117	35	117	94,7	149,7	11	48	19,5	26	43	66,5
	824	82404H	825	82504H	UCFL-H 208/117	40	117	94,7	149,7	11	53	19	26,85	44	67

Inserto "long life", con guarnizioni, versione aperta e chiusa / *"Long life" insert, sealed, open and close version / "Long Life"-Flanschlager, abgedichtet, offene und geschlossene Version*

	Part	Art-close	Part	Art-open	Series	d	I	A	B	C	D	E	F	G	H
"Long life"	824	82412LH	825	82512LH	UCFL-H 206	30	117	86,7	149,7	11	40,3	20	26,85	42	61,5
	824	82403LH	825	82503LH	UCFL-H 207/117	35	117	94,7	149,7	11	48	19,5	26	43	66,5
	824	82404LH	825	82504LH	UCFL-H 208/117	40	117	94,7	149,7	11	53	19	26,85	44	67

Inserto con ghiera eccentrica, guarnizioni, versione aperta e chiusa / *Insert with locking collar, sealed, open and close version / Flanschlager mit Exzenter-Klemmring, abgedichtet, offene und geschlossene Version*

	Part	Art-close	Part	Art-open	Series	d	I	A	B	C	D	E	F	G	H
Chrome Steel	826	82612H	827	82712H	UCFL-H 206	30	117	86,7	149,7	11	44,5	20	26,85	47,7	61,5
	826	82603H	827	82703H	UCFL-H 207/117	35	117	94,7	149,7	11	55,6	19,5	26	49,9	66,5
	826	82604H	827	82704H	UCFL-H 208/117	40	117	94,7	149,7	11	60,3	19	26,85	54	67

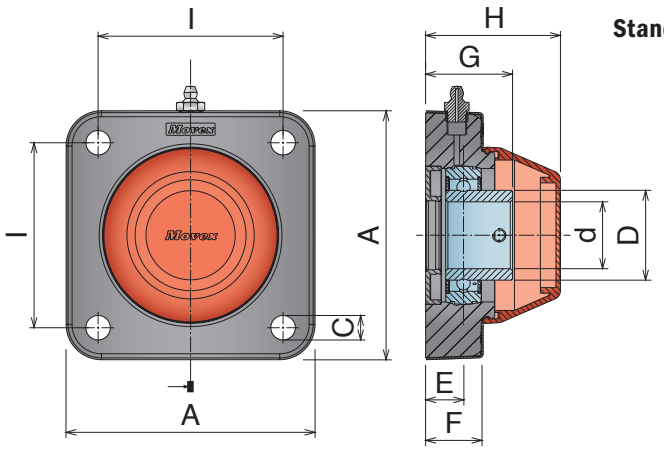

Standard

Ghiera eccentrica
Locking collar
Exzenter-Klemmring

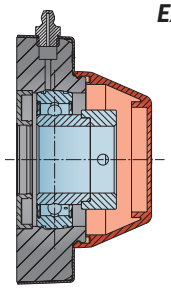

Solid Housing

Inserto standard, con guarnizioni, versione aperta e chiusa / *Standard insert, sealed, open and close version / Standard-Flanschlager, abgedichtet, offene und geschlossene Version*

	Part	Art-close	Part	Art-open	Series	d	I	A	C	D	E	F	G	H
Chrome Steel	830	83002H	831	83102H	UCF-H 206	30	83	111,7	11	40,3	17	25	39	60,5
	830	83004H	831	83104H	UCF-H 208/83	40	83	111,7	11	53	19,5	25	44,5	65,5

Inserto "long life", con guarnizioni, versione aperta e chiusa / *"Long life" insert, sealed, open and close version / "Long Life"-Flanschlager, abgedichtet, offene und geschlossene Version*

	Part	Art-close	Part	Art-open	Series	d	I	A	C	D	E	F	G	H
"Long life"	830	83002LH	831	83102LH	UCF-H 206	30	83	111,7	11	40,3	17	25	39	60,5
	830	83004LH	831	83104LH	UCF-H 208/83	40	83	111,7	11	53	19,5	25	44,5	65,5

Inserto con ghiera eccentrica, guarnizioni, versione aperta e chiusa / *Insert with locking collar, sealed, open and close version / Flanschlager mit Exzenter-Klemmring, abgedichtet, offene und geschlossene Version*

	Part	Art-close	Part	Art-open	Series	d	I	A	C	D	E	F	G	H
Chrome Steel	832	83202H	833	83302H	UCF-H 206	30	83	111,7	11	44,5	17	25	47,7	60,5
	832	83204H	833	83304H	UCF-H 208/83	40	83	111,7	11	60,3	19,5	25	54,2	65,5

CL/CS

External housing in Stainless steel



Componenti

• Sede in poliammide rinforzato, con elevata resistenza meccanica e ottima resistenza contro agenti chimici corrosivi quali acqua, oli, benzina e liquidi contenenti alcool. Tutti i nostri cuscinetti possono essere utilizzati ad una temperatura compresa fra 0°C e +80°C.

• I cuscinetti sono realizzati in acciaio al cromo, disponibili anche, su richiesta, nella versione in acciaio inox.
Il cuscinetto all'interno della flangia può essere regolato di 2,5°.

• L'ingrassatore viene realizzato in ferro nichelato, o in acciaio inox nella versione con il cuscinetto in acciaio inox.

• Distanziali realizzati in ottone nichelato per rinforzare il foro di fissaggio.

• Rondella in acciaio inox.

• Coperchio di sicurezza in PP.

• **"Cover"** in acciaio inox.

Components

• *Housing in reinforced polyamide, with higher load capacity and good resistance to corrosive chemicals such as water, oils, petrol and alcoholic beverages.*
All our bearings can be used at temperatures between 0°C and +80°C.

• *Ball bearings are made in chrome steel. They are also available, upon request, in stainless steel. Max misalignment between shaft and housing: 2.5°.*

• *Grease nipple are made in nickel plated stell, but they can also be made in stainless steel on the stainless steel bearing.*

• *Spacers from nickel plated brass to reinforce fixing holes.*

• *Washer stainless steel.*

• ***"Cover"** in stainless steel*

Komponenten

• *Gehäuse gefertigt aus verstärktem Polyamid Dies gewährleistet eine gute Widerstandsfähigkeit gegenüber mechanischen Einflüssen und eine gute Korrosionsbeständigkeit gegenüber Wasser, Ölen, Benzin, Flüssigkeiten mit Alkohol und Chemikalien. Alle unsere Gehäuse-Lagereinheiten können in einem Temperaturbereich von 0°C bis +80°C eingesetzt werden.*

• *Die Lagereinsätze sind aus Chrom-Stahl, auf Anfrage auch in Edelstahl erhältlich. Alle Lager gleichen eine Fluchtungsfehler von bis zu 2,5° selbstständig aus.*

• *Die Schmiernippel sind aus vernickeltem Stahl (aus Edelstahl wenn die Ausführung mit Edelstahl Einsatz gefragt ist).*

• *Alle Distanzstücke sind aus vernickeltem Messing und verstärkten die Befestigungsbohrungen.*

• *Alle Unterlegscheiben aus Edelstahl.*

• ***"Cover"** aus Edelstahl.*

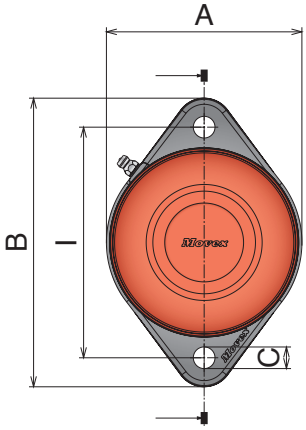

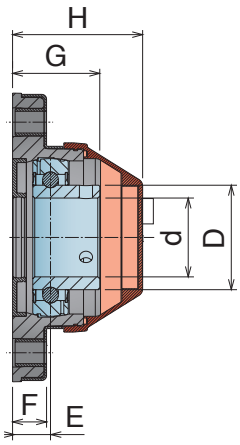

Standard

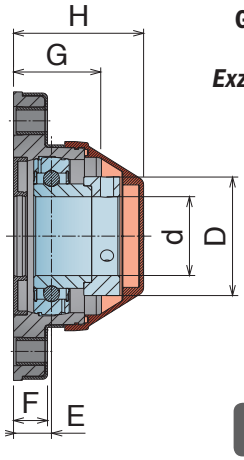

Ghiera eccentrica
Locking collar
Exzenter-Klemmring

Solid Housing

Inserto standard, con guarnizioni, versione aperta e chiusa / *Standard insert, sealed, open and close version / Standard-Flanschlager, abgedichtet, offene und geschlossene Version*

	Part	Art-close	Part	Art-open	Series	d	I	A	B	C	D	E	F	G	H
Chrome Steel	845	84504	846	84604	CL 208	40	117	99	146,5	11	53	18,5	16,5	43	66

Inserto standard, con guarnizioni, versione aperta e chiusa / *Standard insert, sealed, open and close version / Standard-Flanschlager, abgedichtet, offene und geschlossene Version*

	Part	Art-close	Part	Art-open	Series	d	I	A	B	C	D	E	F	G	H
Stainless Steel	845	84504SS	846	84604SS	CL 208	40	117	99	146,5	11	53	18,5	16,5	43	66

Inserto "long life", con guarnizioni, versione aperta e chiusa / *"Long life" insert, sealed, open and close version / "Long Life"-Flanschlager, abgedichtet, offene und geschlossene Version*

	Part	Art-close	Part	Art-open	Series	d	I	A	B	C	D	E	F	G	H
"Long life"	845	84504L	846	84604L	CL 208	40	117	99	146,5	11	53	18,5	16,5	43	66

Inserto con ghiera eccentrica, guarnizioni, versione aperta e chiusa / *Insert with locking collar, sealed, open and close version / Flanschlager mit Exzenter-Klemmring, abgedichtet, offene und geschlossene Version*

	Part	Art-close	Part	Art-open	Series	d	I	A	B	C	D	E	F	G	H
Chrome Steel	847	84704	848	84804	CL 208	40	117	99	146,5	11	60,3	18,5	16,5	43	66

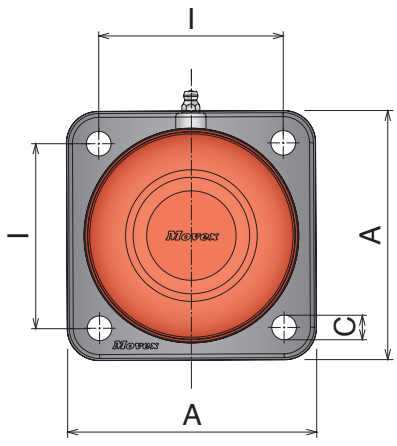

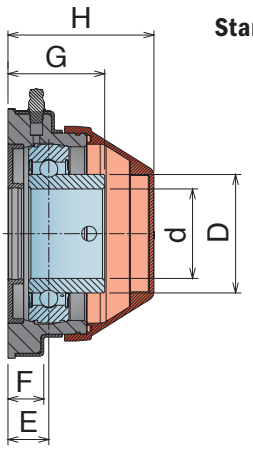

Standard

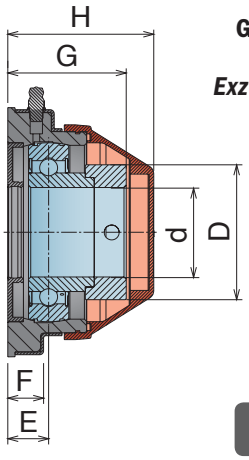

Ghiera eccentrica
Locking collar
Exzenter-Klemmring

Solid Housing

Inserto standard, con guarnizioni, versione aperta e chiusa / *Standard insert, sealed, open and close version / Standard-Flanschlager, abgedichtet, offene und geschlossene Version*

	Part	Art-close	Part	Art-open	Series	d	I	A	C	D	E	F	G	H
Chrome Steel	849	84904	850	85004	CS 208	40	82,5	111	11	53	18,5	16,5	43	66

Inserto standard, con guarnizioni, versione aperta e chiusa / *Standard insert, sealed, open and close version / Standard-Flanschlager, abgedichtet, offene und geschlossene Version*

	Part	Art-close	Part	Art-open	Series	d	I	A	C	D	E	F	G	H
Stainless Steel	849	84904SS	850	85004SS	CS 208	40	82,5	111	11	53	18,5	16,5	43	66

Inserto "long life", con guarnizioni, versione aperta e chiusa / *"Long life" insert, sealed, open and close version / "Long Life"-Flanschlager, abgedichtet, offene und geschlossene Version*

	Part	Art-close	Part	Art-open	Series	d	I	A	C	D	E	F	G	H
"Long life"	849	84904L	850	85004L	CS 208	40	82,5	111	11	53	18,5	16,5	43	66

Inserto con ghiera eccentrica, guarnizioni, versione aperta e chiusa / *Insert with locking collar, sealed, open and close version / Flanschlager mit Exzenter-Klemmring, abgedichtet, offene und geschlossene Version*

	Part	Art-close	Part	Art-open	Series	d	I	A	C	D	E	F	G	H
Chrome Steel	851	85104	852	85204	CS 208	40	82,5	111	11	60,3	18,5	16,5	53	66

FL/F/FB/UCT



Cuscinetti - Bianchi

- Sede in Poliammide Bianco.
- I cuscinetti sono realizzati in Acciaio Inox, è possibile regolarli di 2.5° all'interno della flangia.
- L'ingrassatore viene realizzato in Acciaio Inox.
- Distanziali realizzati in Acciaio Inox.
- Rondella per ingrassatore realizzata in Polietilene.

Bearing units – White

- *Housing in reinforced Polyamide, white*
- *Ball bearings are made in stainless steel, they allow a misalignment between shaft and housing of max. 2.5°.*
- *Grease nipple made in stainless steel.*
- *Spacers in stainless steel to reinforce fixing holes.*
- *Washer for grease nipple in PE.*

Flanschlager – Weiss

- *Lagergehäuse gefertigt aus verstärktem Polyamid, weiß.*
- *Lagereinsatz aus Edelstahl, alle Lager gleichen einen Fluchtungsfehler von bis zu 2,5° selbständig aus.*
- *Schmiernippel aus Edelstahl.*
- *Distanzstücke aus Edelstahl und verstärken die Befestigungsbohrungen.*
- *Unterlegscheibe für Schmiernippel aus Edelstahl.*

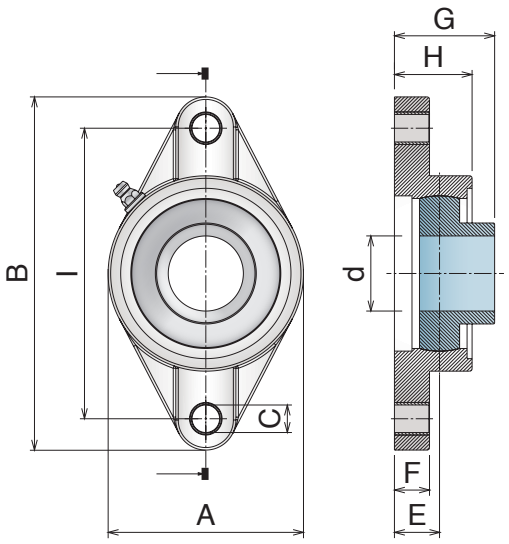

FL Inserto standard
Standard insert / Standard-Flanschlager

Stainless Steel Insert

Part	Article-Nr.	Series	d	I	A	B	C	E	F	G	H
813	81300	FL 204	20	90	64	113	11	15,4	11,4	33,7	26,5
813	81301	FL 205	25	99	70	131	11	17	13,5	36,7	29,1
813	81302	FL 206	30	117	80	148	11	19	13,3	41,2	30,5
813	81303	FL 207	35	130	90	164	13	18	16,1	43,4	32,8
813	81304	FL 208	40	144	100	176	14	21,5	20	51,7	37,5



Safety Cap

Series	Article-Nr.
FL 204	89801
FL 205	89802
FL 206	89803
FL 207	89804
FL 208	89805

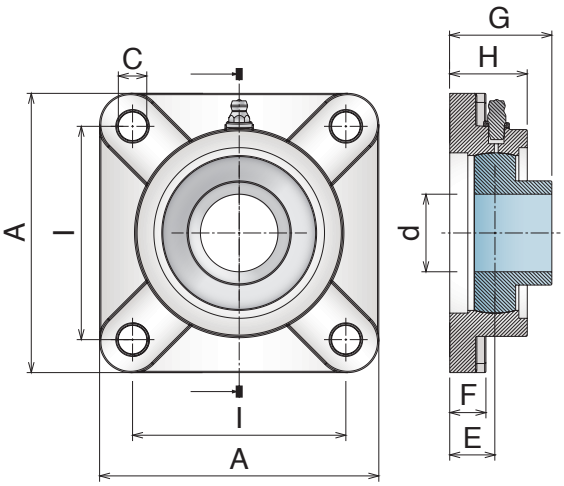

F Inserto standard
Standard insert / Standard-Flanschlager

Stainless Steel Insert

Part	Article-Nr.	Series	d	I	A	C	E	F	G	H
814	81400	F 204	20	63,5	86	11	18	13,4	36,3	27,8
814	81401	F 205	25	70	95	11	17	14	36,7	28,0
814	81402	F 206	30	83	107	11	19,2	14,3	41,4	31,5
814	81403	F 207	35	92	118	13	21,5	15,5	46,9	34,8
814	81404	F 208	40	102	130	14	23	17	53,2	37,5



Safety Cap

Series	Article-Nr.
FL 204	89801
FL 205	89802
FL 206	89803
FL 207	89804
FL 208	89805

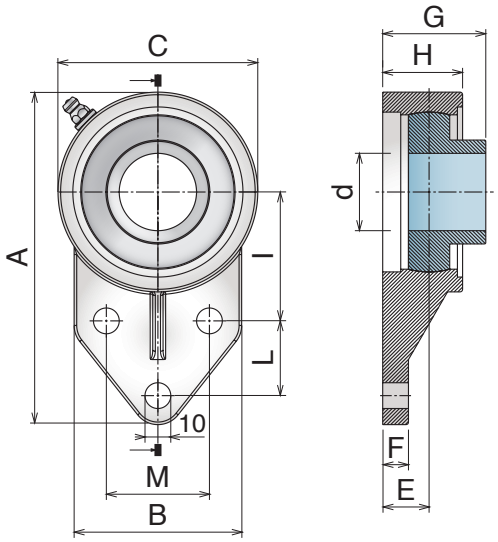

FB Inserto standard
Standard insert / Standard-Flanschlager

Stainless Steel Insert

Part	Art.-Nr.	Series	d	A	I	L	M	C	B	E	F	G	H
815	81500	FB 204	20	108,5	42,9	22,2	38,1	62	62	15,4	12	33,7	26,2
815	81501	FB 205	25	120,6	46	28,6	41,3	68,5	63,5	21	12	40,7	33,5
815	81502	FB 206	30	140	52,4	31,8	47,6	83	75	19	14	41,2	31,5
815	81503	FB 207	35	157	60,3	31,8	50,8	95	89	21,4	16	46,8	36,5
815	81504	FB 208	40	164	60,3	41,3	50	100	78	22	18	47,5	35,7

FB Inserto standard
Standard insert / Standard-Flanschlager

Chrome Steel Insert

Part	Art.-Nr.	Series	d	A	I	L	M	C	B	E	F	G	H
816	81600	FB 204	20	108,5	42,9	22,2	38,1	62	62	15,4	12	33,7	26,2
816	81601	FB 205	25	120,6	46	28,6	41,3	68,5	63,5	21	12	40,7	33,5
816	81602	FB 206	30	140	52,4	31,8	47,6	83	75	19	14	41,2	31,5
816	81603	FB 207	35	157	60,3	31,8	50,8	95	89	21,4	16	46,8	36,5
816	81604	FB 208	40	164	60,3	41,3	50	100	78	22	18	47,5	35,7



Safety Cap

Series	Article-Nr.
FL 204	89801
FL 205	89802
FL 206	89803
FL 207	89804
FL 208	89805

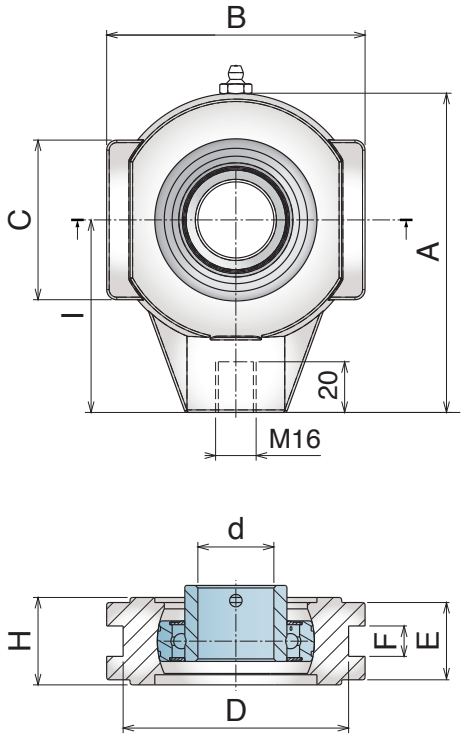

UCT Inserto standard
Standard insert / Standard-Flanschlager

Stainless Steel Insert

Part	Art.-Nr.	Series	d	A	I	C	B	E	F	H
860	86000	UCT 204	20	99	64	47	88	23,5	12	27,5
860	86001	UCT 205	25	99	64	47	88	23,5	12	27,5
860	86002	UCT 206	30	125	76	63	102	30,5	12	34,5
860	86003	UCT 207	35	125	76	63	102	30,5	12	34,5
860	86004	UCT 208	40	140	85	80	114	33,5	16	38,5

UCT Inserto standard
Standard insert / Standard-Flanschlager

Chrome Steel Insert

Part	Art.-Nr.	Series	d	A	I	C	B	E	F	H
870	87000	UCT 204	20	99	64	47	88	23,5	12	27,5
870	87001	UCT 205	25	99	64	47	88	23,5	12	27,5
870	87002	UCT 206	30	125	76	63	102	30,5	12	34,5
870	87003	UCT 207	35	125	76	63	102	30,5	12	34,5
870	87004	UCT 208	40	140	85	80	114	33,5	16	38,5



Safety Cap

Series	Article-Nr.
FL 204	89801
FL 205	89802
FL 206	89803
FL 207	89804
FL 208	89805

SUCF/SUCFL/SUCFK



Cuscinetti Acciaio Inox

- Sede in Acciaio Inox, ottimale per l'utilizzo nei processi alimentari e farmaceutici.
- I cuscinetti sono realizzati in Acciaio inox, è possibile regolarli di 2.5° all'interno della flangia.
- Ingrassatore realizzato in Acciaio inox.
- Rondella per ingrassatore realizzata in Polietilene.

Bearing units in Stainless steel

- *Housing in stainless steel, best choice for processes in food or pharmaceutical industries.*
- *Ball bearings are made in stainless steel, they allow a misalignment between shaft and housing of max. 2.5°.*
- *Grease nipple made in stainless steel.*
- *Washer for grease nipple in PE.*

Flanschlager aus Edelstahl

- *Lagergehäuse aus Edelstahl, optimal für den Einsatz in der Lebensmittel- oder Pharmaindustrie.*
- *Lagereinsatz aus Edelstahl, alle Lager gleichen einen Fluchtungsfehler von bis zu 2,5° selbständig aus.*
- *Schmiernippel aus Edelstahl.*
- *Unterlegscheibe für Schmiernippel aus PE.*

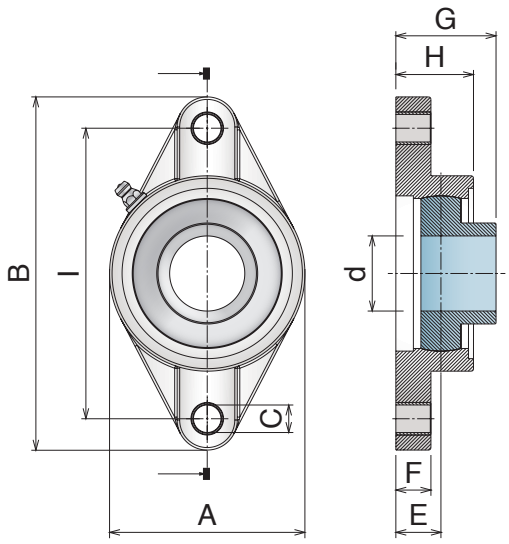

SUCFL
Inserto standard
Standard insert / Standard-Flanschlager

Part	Article-Nr.	Series	d	I	A	B	C	E	F	G	H
817	81700	SUCFL 204	20	90	60	113	12	15	11	33,3	25,5
817	81701	SUCFL 205	25	99	68	130	16	16	13	35,8	27
817	81702	SUCFL 206	30	117	80	148	16	18	13	40,2	31
817	81703	SUCFL 207	35	130	90	161	16	19	15	44,4	34
817	81704	SUCFL 208	40	144	100	175	16	21	15	51,2	36

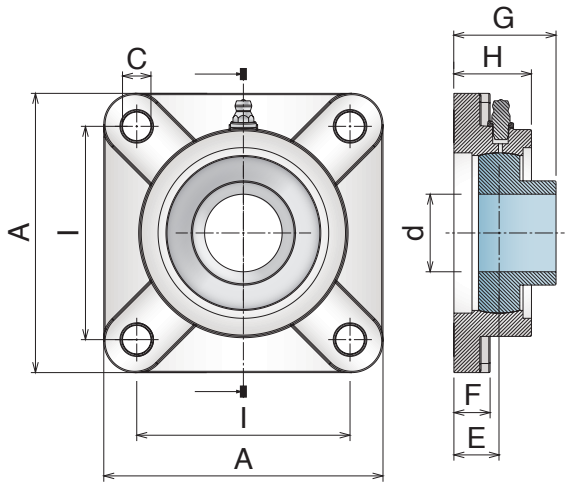

SUCF
Inserto standard
Standard insert / Standard-Flanschlager

Part	Article-Nr.	Series	d	I	A	C	E	F	G	H
819	81900	SUCF 204	20	64	86	12	15	12	33,3	25,5
819	81901	SUCF 205	25	70	95	12	16	14	35,8	27
819	81902	SUCF 206	30	83	108	12	18	14	40,2	31
819	81903	SUCF 207	35	92	117	14	19	15	44,4	34
819	81904	SUCF 208	40	102	130	16	21	15	51,2	36

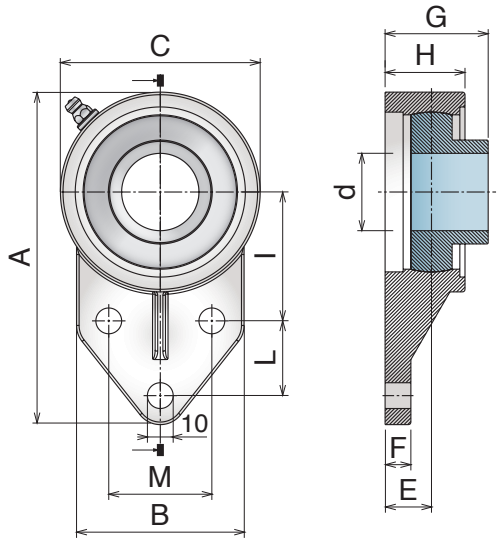

SUCFK
Inserto standard
Standard insert / Standard-Flanschlager

Part	Art.-Nr.	Series	d	A	I	L	M	B	C	E	F	G	H
821	82100	SUCFK 204	20	110	42	27	32	52	62	15	13	33,3	25,5
821	82101	SUCFK 205	25	116	45	27	34	56	68	16	13	35,8	27
821	82102	SUCFK 206	30	130	50	29	40	65	78	18	13	40,2	31
821	82103	SUCFK 207	35	144	55	32	46	70	90	19	15	44,4	34
821	82104	SUCFK 208	40	164	60	41	50	78	100	21	16	51,2	36

954

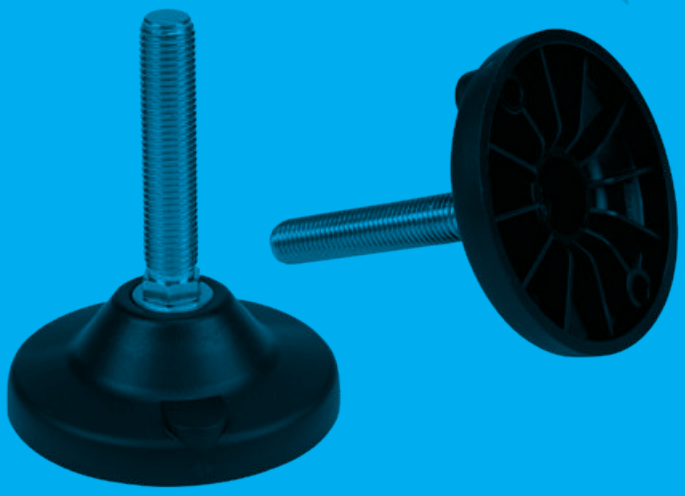

Leveling pads

901-909 Basic
Ø40-Ø50-Ø60



Pag 456

953-957 Basic
Ø80-Ø100



Pag 458

910-918 Standard
Ø80-Ø100-Ø120



Pag 460

943-947
Ø110



Pag 462

948-952
Ø123



Pag 464

958-959/931-932/981-983
Ø123



Pag 466

919-980 *Easy Clean*
Ø50-Ø65-Ø75-Ø100-Ø125-Ø150-Ø180



Pag 468

985-991 *Easy Clean*
Ø50-Ø65-Ø75-Ø100-Ø125-Ø150-Ø180



Pag 471

934-939 *Easy Clean*
Ø75-Ø100



Pag 474

992-993 *Easy Clean*
Ø75-Ø100



Pag 476

960-971
Ø123.5



Pag 478

Materiale / Material / Materialien:
Basi: Poliammide Base / *Plate: Polyamide / Fussplatte: Polyamid*
Stelo: Acciaio inox o Ferro zincato / *Spindle: Stainless steel or Zinc plated steel / Spindel: Edelstahl oder Stahl Verzinkt*

901-909 Basic



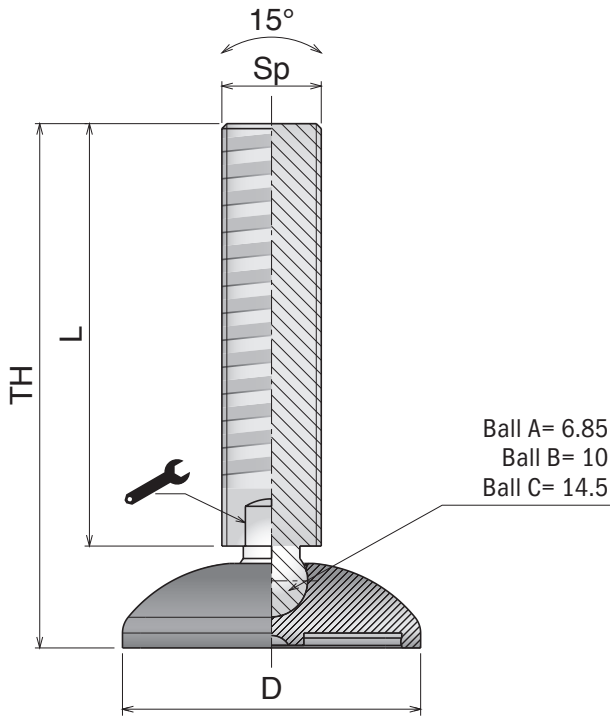

Accessori / *Accessories* / *Zubehör*



Gomma anti-scivolo
Anti-slip pad / Gummiplatte

Part	Article-Nr.	For base
996	99601	Ø40
996	99602	Ø50
996	99603	Ø60



Dadi acciaio inox
Stainless steel nuts / Mutter Edelstahl

Part	Article-Nr.	Spindle
998	99801	M10
998	99802	M12
998	99804	M16
998	99805	M20

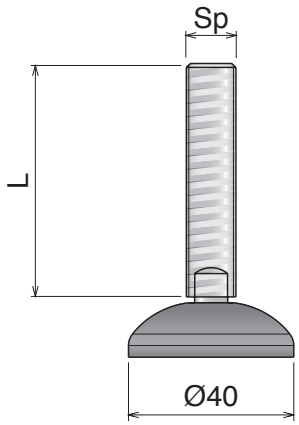

Piede diam. 40 mm
Leveller diam. 40 mm / Gelenkfuss Diam. 40 mm

Part	SS	FeZn	Sp	TH	L	Ball			N
901	90101	90101Z	M10	50	35	A	7	-	10.000
901	90102	90102Z		100	85	A	7	-	
901	90103	90103Z		150	135	A	7	-	
902	90201	90201Z	M12	75	60	B	9	-	12.000
902	90202	90202Z		100	85	B	9	-	
902	90203	90203Z		150	135	B	9	-	
903	90301	90301Z	M16	75	60	B	13	-	15.000
903	90302	90302Z		100	85	B	13	-	
903	90303	90303Z		150	135	B	13	-	
903	90301H	90301ZH		75	60	B	-	16	
903	90302H	90302ZH		100	85	B	-	16	
903	90303H	90303ZH		150	135	B	-	16	

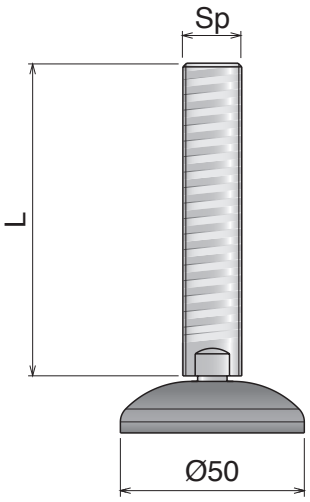

Piede diam. 50 mm
Leveller diam. 50 mm / Gelenkfuss Diam. 50 mm

Part	SS	FeZn	Sp	TH	L	Ball			N
904	90401	90401Z	M10	50	35	A	7	-	10.000
904	90402	90402Z		100	85	A	7	-	
904	90403	90403Z		150	135	A	7	-	
905	90501	90501Z	M12	75	60	B	9	-	12.000
905	90502	90502Z		100	85	B	9	-	
905	90503	90503Z		150	135	B	9	-	
906	90601	90601Z	M16	75	60	B	13	-	15.000
906	90602	90602Z		100	85	B	13	-	
906	90603	90603Z		150	135	B	13	-	
906	90601H	90601ZH		75	60	B	-	16	
906	90602H	90602ZH		100	85	B	-	16	
906	90603H	90603ZH		150	135	B	-	16	

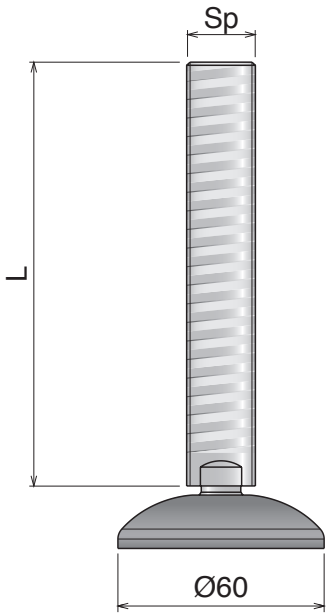

Piede diam. 60 mm
Leveller diam. 60 mm / Gelenkfuss Diam. 60 mm

Part	SS	FeZn	Sp	TH	L	Ball			N
907	90701	90701Z	M12	80	60	B	9	-	12.000
907	90702	90702Z		105	85	B	9	-	
907	90703	90703Z		155	135	B	9	-	
908	90801	90801Z	M16	105	85	B	13	-	15.000
908	90802	90802Z		155	135	B	13	-	
908	90803	90803Z		205	185	B	13	-	
908	90801H	90801ZH		105	85	B	-	16	
908	90802H	90802ZH		155	135	B	-	16	
908	90803H	90803ZH		205	185	B	-	16	
909	90901	90901Z	M20	105	85	C	16	-	16.000
909	90902	90902Z		155	135	C	16	-	
909	90903	90903Z		205	185	C	16	-	
909	90901H	90901ZH		105	85	C	-	20	
909	90902H	90902ZH		155	135	C	-	20	
909	90903H	90903ZH		205	185	C	-	20	

Materiale / Material / Materialien:
Basi: Poliammide Base / *Plate: Polyamide / Fussplatte: Polyamid*
Stelo: Acciaio inox o Ferro zincato / *Spindle: Stainless steel or Zinc plated steel / Spindel: Edelstahl oder Stahl Verzinkt*

953-957 Basic



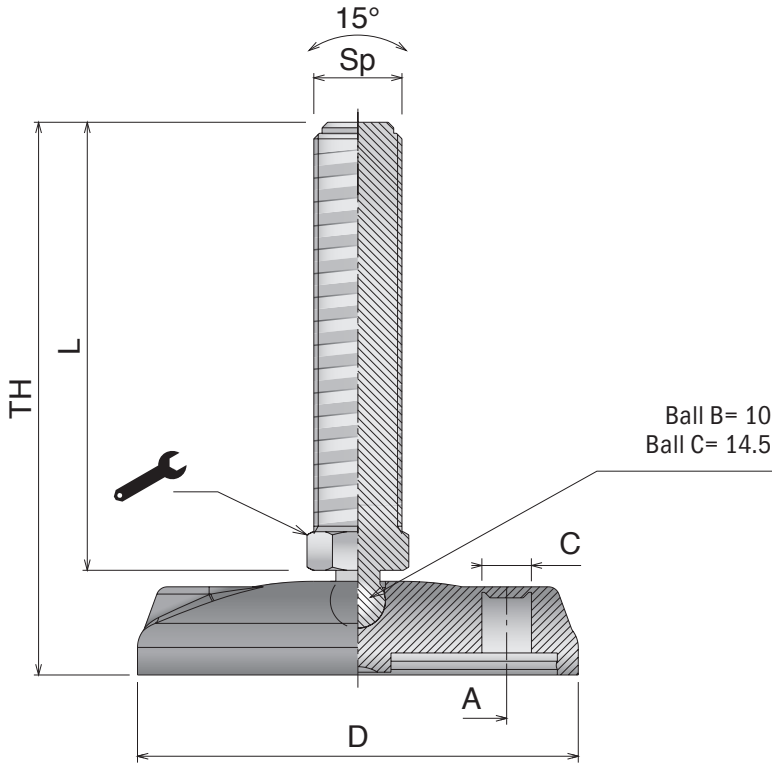

Accessori / *Accessories* / *Zubehör*



Gomma anti-scivolo
Anti-slip pad / Gummiplatte

Part	Article-Nr.	For base
996	99604	Ø80
996	99605	Ø100



Dadi acciaio inox
Stainless steel nuts / Mutter Edelstahl

Part	Article-Nr.	Spindle
998	99802	M12
998	99804	M16
998	99805	M20

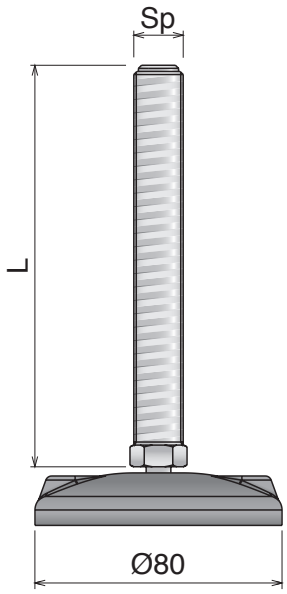

Piede diam. 80 mm
Leveller diam. 80 mm / Gelenkfuss Diam. 80 mm

Part	SS	FeZn	Sp	TH	L	Ball			N
953	95301	95301Z	M12	80	60	B	9	-	12.000
953	95302	95302Z		105	85	B	9	-	
953	95303	95303Z		155	135	B	9	-	
954	95401	95401Z	M16	105	85	B	13	-	15.000
954	95402	95402Z		155	135	B	13	-	
954	95403	95403Z		205	185	B	13	-	
954	95401H	95401ZH		105	85	B	-	16	
954	95402H	95402ZH		155	135	B	-	16	
954	95403H	95403ZH		205	185	B	-	16	
955	95501	95501Z	M20	105	85	C	16	-	18.000
955	95502	95502Z		155	135	C	16	-	
955	95503	95503Z		205	185	C	16	-	
955	95501H	95501ZH		105	85	C	-	20	
955	95502H	95502ZH		155	135	C	-	20	
955	95503H	95503ZH		205	185	C	-	20	

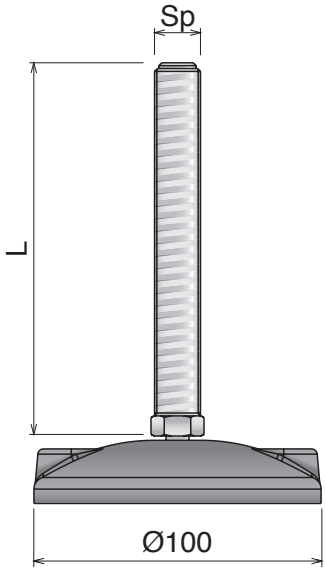

Piede diam. 100 mm
Leveller diam. 100 mm / Gelenkfuss Diam. 100 mm

Part	SS	FeZn	Sp	TH	L	Ball			N
956	95601	95601Z	M16	108	85	B	13	-	15.000
956	95602	95602Z		158	135	B	13	-	
956	95603	95603Z		208	185	B	13	-	
956	95601H	95601ZH		108	85	B	-	16	
956	95602H	95602ZH		158	135	B	-	16	
956	95603H	95603ZH		208	185	B	-	16	
957	95701	95701Z	M20	108	85	C	16	-	18.000
957	95702	95702Z		158	135	C	16	-	
957	95703	95703Z		208	185	C	16	-	
957	95701H	95701ZH		108	85	C	-	20	
957	95702H	95702ZH		158	135	C	-	20	
957	95703H	95703ZH		208	185	C	-	20	

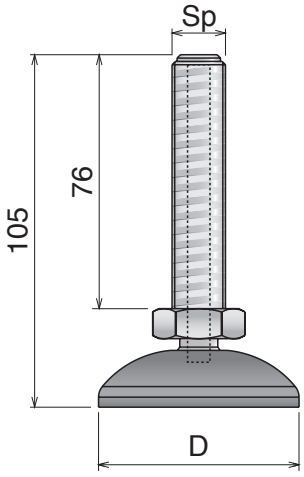



Piede diam. 60-80-100 mm
Leveller diam. 60-80-100 mm
Gelenkfuss Diam. 60-80-100 mm

Part	Article-Nr.	Sp	D	Ball		N
908	90810PH	M16	60	C	24	12.000
954	95410PH		80	C	24	
957	95710PH		100	C	24	

Base and spindle: Poliammide / *Polyamide* / *Polyamid*

Materiale / Material / Materialien:
Basi: Poliammide Base / *Plate: Polyamide / Fussplatte: Polyamid*
Stelo: Acciaio inox o Ferro zincato / *Spindle: Stainless steel or Zinc plated steel / Spindel: Edelstahl oder Stahl Verzinkt*

910-918 Standard



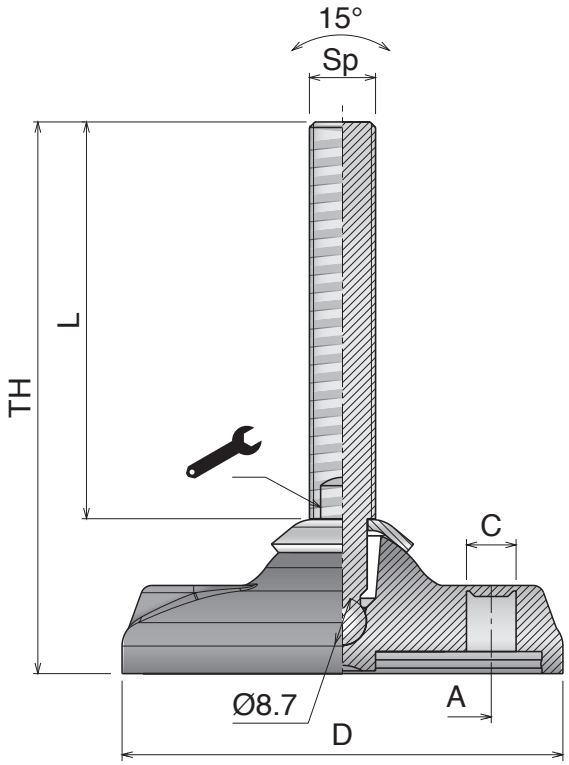

Accessori / *Accessories* / *Zubehör*



Gomma anti-scivolo
Anti-slip pad / Gummiplatte

Part	Article-Nr.	For base
996	99604	Ø80
996	99605	Ø100
996	99606	Ø120



Dadi acciaio inox
Stainless steel nuts / Mutter Edelstahl

Part	Article-Nr.	Spindle
998	99802	M12
998	99804	M16
998	99805	M20
998	99806	M24

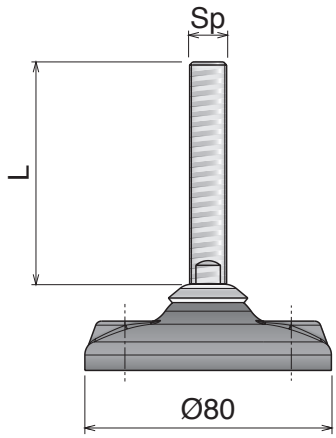

Piede diam. 80 mm
Leveller diam. 80 mm / Gelenkfuss Diam. 80 mm

Part	SS	FeZn	Sp	TH	L	A	C			N
910	91001	91001Z	M12	100	72	54	9	9	-	12.000
910	91002	91002Z		150	122	54	9	9	-	
910	91003	91003Z		200	172	54	9	9	-	
911	91101	91101Z	M16	95	67	54	9	13	-	15.000
911	91102	91102Z		145	117	54	9	13	-	
911	91103	91103Z		195	167	54	9	13	-	
911	91101H	91101ZH		95	67	54	9	-	16	
911	91102H	91102ZH		145	117	54	9	-	16	
911	91103H	91103ZH		195	167	54	9	-	16	
912	91201	91201Z	M20	120	92	54	9	16	-	16.000
912	91202	91202Z		170	142	54	9	16	-	
912	91203	91203Z		220	192	54	9	16	-	
912	91201H	91201ZH		120	92	54	9	-	20	
912	91202H	91202ZH		170	142	54	9	-	20	
912	91203H	91203ZH		220	192	54	9	-	20	

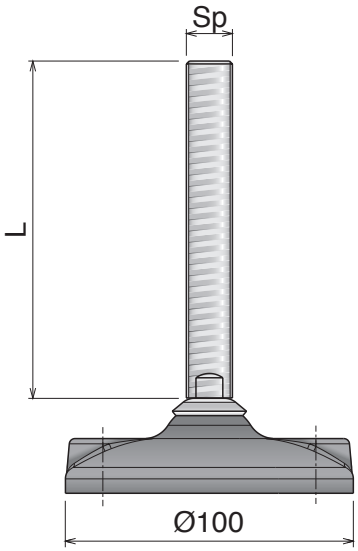

Piede diam. 100 mm
Leveller diam. 100 mm / Gelenkfuss Diam. 100 mm

Part	SS	FeZn	Sp	TH	L	A	C			N
913	91301	91301Z	M16	100	67	74	13	13	-	15.000
913	91302	91302Z		150	117	74	13	13	-	
913	91303	91303Z		200	167	74	13	13	-	
913	91301H	91301ZH		100	67	74	13	-	16	
913	91302H	91302ZH		150	117	74	13	-	16	
913	91303H	91303ZH		200	167	74	13	-	16	
914	91401	91401Z	M20	125	92	74	13	16	-	16.000
914	91402	91402Z		175	142	74	13	16	-	
914	91403	91403Z		225	192	74	13	16	-	
914	91401H	91401ZH		125	92	74	13	-	20	
914	91402H	91402ZH		175	142	74	13	-	20	
914	91403H	91403ZH		225	192	74	13	-	20	
915	91501	91501Z	M24	125	92	74	13	19	-	18.000
915	91502	91502Z		175	142	74	13	19	-	
915	91503	91503Z		225	192	74	13	19	-	

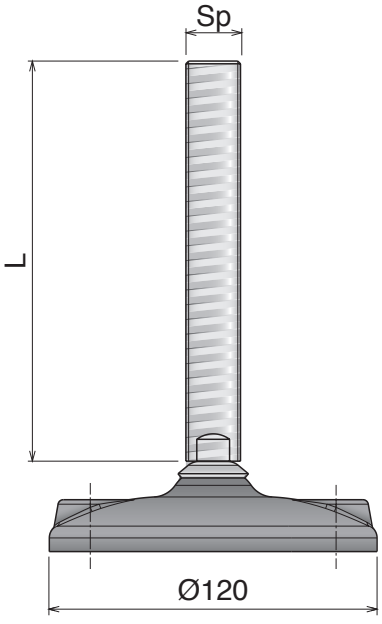

Piede diam. 120 mm
Leveller diam. 120 mm / Gelenkfuss Diam. 120 mm

Part	SS	FeZn	Sp	TH	L	A	C			N
916	91601	91601Z	M16	100	67	90	13	13	-	15.000
916	91602	91602Z		150	117	90	13	13	-	
916	91603	91603Z		200	167	90	13	13	-	
916	91601H	91601ZH		100	67	90	13	-	16	
916	91602H	91602ZH		150	117	90	13	-	16	
916	91603H	91603ZH		200	167	90	13	-	16	
917	91701	91701Z	M20	125	92	90	13	16	-	16.000
917	91702	91702Z		175	142	90	13	16	-	
917	91703	91703Z		225	192	90	13	16	-	
917	91701H	91701ZH		125	92	90	13	-	20	
917	91702H	91702ZH		175	142	90	13	-	20	
917	91703H	91703ZH		225	192	90	13	-	20	
918	91801	91801Z	M24	125	92	90	13	19	-	18.000
918	91802	91802Z		175	142	90	13	19	-	
918	91803	91803Z		225	192	90	13	19	-	

Materiale / *Material / Materialien:*
Basi: Poliammide Base / *Plate: Polyamide / Fussplatte: Polyamid*
Stelo: Acciaio inox o Ferro zincato / *Spindle: Stainless steel or Zinc plated steel / Spindel: Edelstahl oder Stahl Verzinkt*

943-947 Ø110



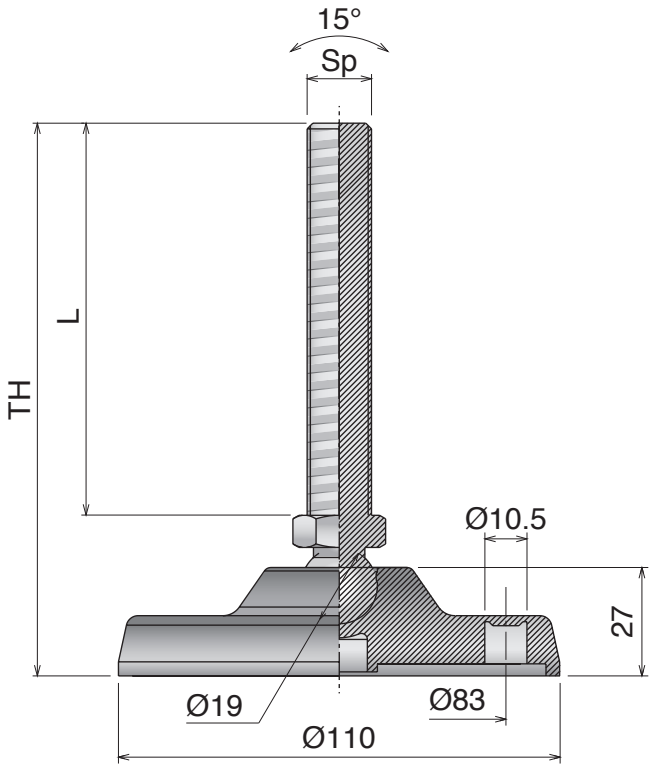

Accessori / *Accessories / Zubehör*



Gomma anti-scivolo
Anti-slip pad / Gummiplatte

Part	Article-Nr.	For base
996	99607	Ø110



Dadi acciaio inox
Stainless steel nuts / Mutter Edelstahl

Part	Article-Nr.	Spindle
998	99804	M16
998	99805	M20
998	99806	M24

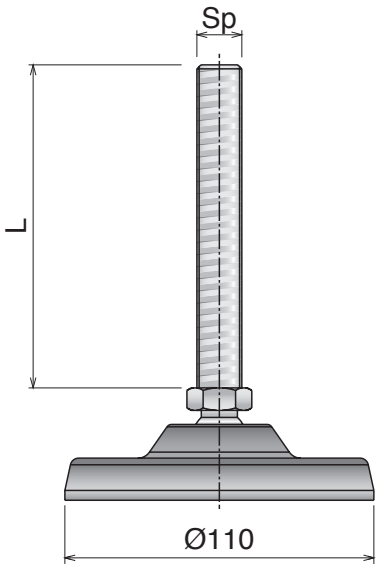

Piede diam. 110 mm
Leveller diam. 110 mm / Gelenkfuss Diam. 110 mm

Without antislip rubber

Part	SS	FeZn	Sp	TH	L		N
943	94301H	94301ZH		155	115	20	
943	94302H	94302ZH	M16	185	145	20	
943	94303H	94303ZH		235	195	20	15.000
944	94401H	94401ZH		155	115	20	
944	94402H	94402ZH	M20	185	145	20	
944	94403H	94403ZH		235	195	20	
945	94501H	94501ZH		155	115	24	
945	94502H	94502ZH	M24	185	145	24	18.000
945	94503H	94503ZH		235	195	24	

With antislip rubber

Part	SS	FeZn	Sp	TH	L		N
943	94351H	94351ZH		155	115	20	
943	94352H	94352ZH	M16	185	145	20	
943	94353H	94353ZH		235	195	20	15.000
944	94451H	94451ZH		155	115	20	
944	94452H	94452ZH	M20	185	145	20	
944	94453H	94453ZH		235	195	20	
945	94551H	94551ZH		155	115	24	
945	94552H	94552ZH	M24	185	145	24	18.000
945	94553H	94553ZH		235	195	24	

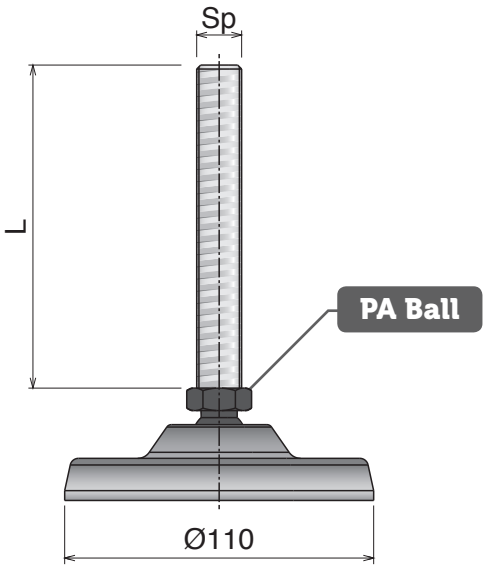

Piede diam. 110 mm
Leveller diam. 110 mm / Gelenkfuss Diam. 110 mm

Without antislip rubber

Part	SS	FeZn	Sp	TH	L		N
946	94601H	94601ZH		155	115	24	
946	94602H	94602ZH	M16	185	145	24	
946	94603H	94603ZH		235	195	24	12.000
947	94701H	94701ZH		155	115	24	
947	94702H	94702ZH	M20	185	145	24	
947	94703H	94703ZH		235	195	24	

With antislip rubber

Part	SS	FeZn	Sp	TH	L		N
946	94651H	94651ZH		155	115	24	
946	94652H	94652ZH	M16	185	145	24	
946	94653H	94653ZH		235	195	24	12.000
947	94751H	94751ZH		155	115	24	
947	94752H	94752ZH	M20	185	145	24	
947	94753H	94753ZH		235	195	24	

Materiale / *Material* / *Materialien:*
Basi: Poliammide Base / *Plate: Polyamide* / *Fussplatte: Polyamid*
Stelo: Acciaio inox o Ferro zincato / *Spindle: Stainless steel or Zinc plated steel* / *Spindel: Edelstahl oder Stahl Verzinkt*

948-952 Ø123



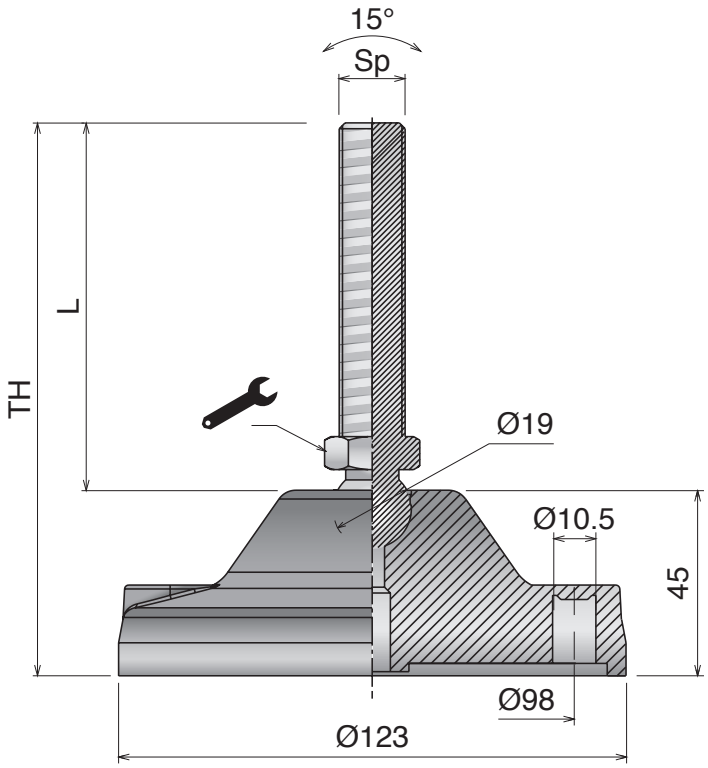

Accessori / *Accessories* / *Zubehör*



Gomma anti-scivolo
Anti-slip pad / Gummiplatte

Part	Article-Nr.	For base
996	99608	Ø123



Dadi acciaio inox
Stainless steel nuts / Mutter Edelstahl

Part	Article-Nr.	Spindle
998	99804	M16
998	99805	M20
998	99806	M24

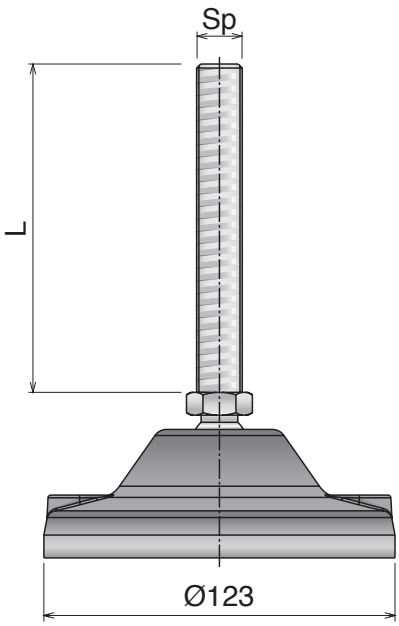

Piede diam. 123 mm
Leveller diam. 123 mm / Gelenkfuss Diam. 123 mm

Without antislip rubber

Part	SS	FeZn	Sp	TH	L		N
948	94801H	94801ZH		175	115	20	
948	94802H	94802ZH	M16	205	145	20	
948	94803H	94803ZH		255	195	20	
949	94901H	94901ZH		175	115	20	
949	94902H	94902ZH	M20	205	145	20	25.000
949	94903H	94903ZH		255	195	20	
950	95001H	95001ZH		175	115	24	
950	95002H	95002ZH	M24	205	145	24	
950	95003H	95003ZH		255	195	24	

With antislip rubber

Part	SS	FeZn	Sp	TH	L		N
948	94851H	94851ZH		175	115	20	
948	94852H	94852ZH	M16	205	145	20	
948	94853H	94853ZH		255	195	20	
949	94951H	94951ZH		175	115	20	
949	94952H	94952ZH	M20	205	145	20	25.000
949	94953H	94953ZH		255	195	20	
950	95051H	95051ZH		175	115	24	
950	95052H	95052ZH	M24	205	145	24	
950	95053H	95053ZH		255	195	24	

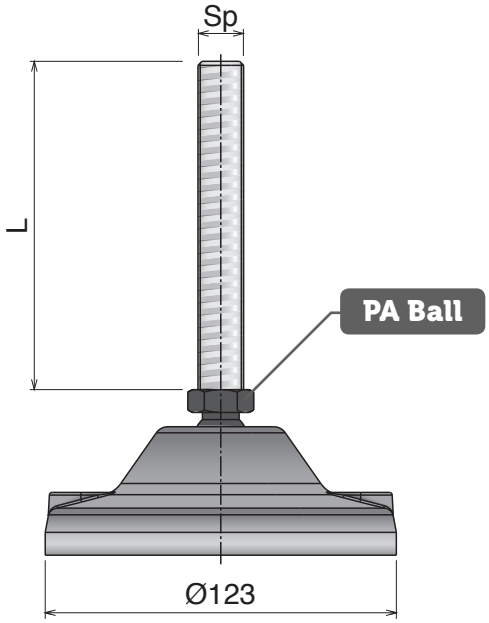

Piede diam. 123 mm
Leveller diam. 123 mm / Gelenkfuss Diam. 123 mm

Without antislip rubber

Part	SS	FeZn	Sp	TH	L		N
951	95101H	95101ZH		175	115	24	
951	95102H	95102ZH	M16	205	145	24	
951	95103H	95103ZH		255	195	24	20.000
952	95201H	95201ZH		175	115	24	
952	95202H	95202ZH	M20	205	145	24	
952	95203H	95203ZH		255	195	24	

With antislip rubber

Part	SS	FeZn	Sp	TH	L		N
951	95151H	95151ZH		175	115	24	
951	95152H	95152ZH	M16	205	145	24	
951	95153H	95153ZH		255	195	24	20.000
952	95251H	95251ZH		175	115	24	
952	95252H	95252ZH	M20	205	145	24	
952	95253H	95253ZH		255	195	24	

Materiale / *Material* / *Materialien:*
Basi: Poliammide Base / *Plate: Polyamide* / *Fussplatte: Polyamid*
Stelo: Acciaio inox o Ferro zincato / *Spindle: Stainless steel or Zinc plated steel* / *Spindel: Edelstahl oder Stahl Verzinkt*

958-959/931-933/981-983 Ø123



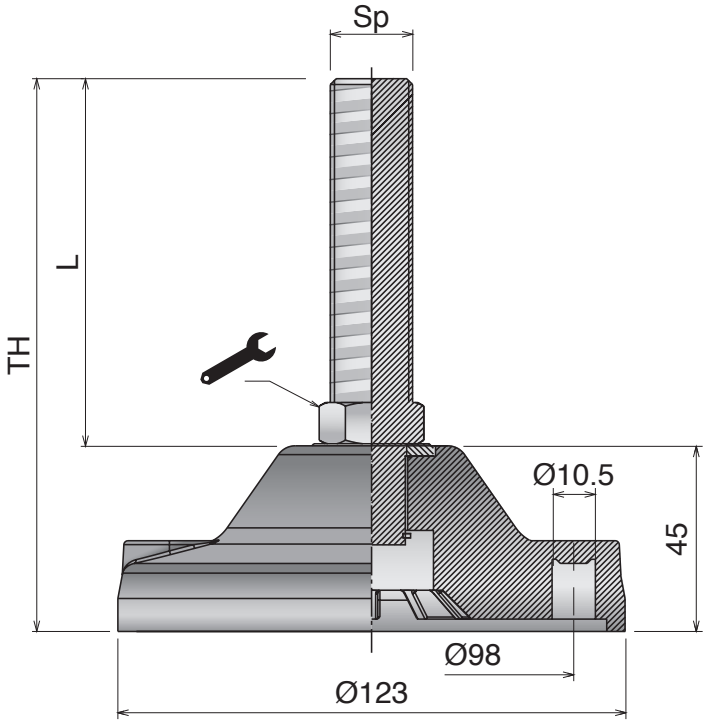

Accessori / *Accessories* / *Zubehör*



Gomma anti-scivolo
Anti-slip pad / Gummiplatte

Part	Article-Nr.	For base
996	99608	Ø123



Dadi acciaio inox
Stainless steel nuts / Mutter Edelstahl

Part	Article-Nr.	Spindle
998	99804	M16
998	99805	M20
998	99806	M24

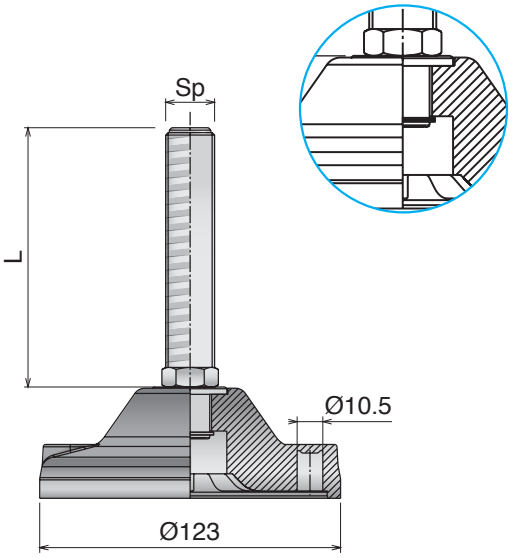

Piede diam. 123 mm / *Leveller diam. 123 mm* / *Gelenkfuss Diam. 123 mm*

Without antislip rubber

Part	SS	FeZn	Sp	TH	L		N
958	95801H	95801ZH	M20	150	98	20	30.000
958	95802H	95802ZH		200	148	20	
958	95803H	95803ZH		250	198	20	
959	95901H	95901ZH	M24	150	98	24	
959	95902H	95902ZH		200	148	24	
959	95903H	95903ZH		250	198	24	

With antislip rubber

GLUE

Part	SS	FeZn	Sp	TH	L		N
958	95851H	95851ZH	M20	150	98	20	30.000
958	95852H	95852ZH		200	148	20	
958	95853H	95853ZH		250	198	20	
959	95951H	95951ZH	M24	150	98	24	
959	95952H	95952ZH		200	148	24	
959	95953H	95953ZH		250	198	24	

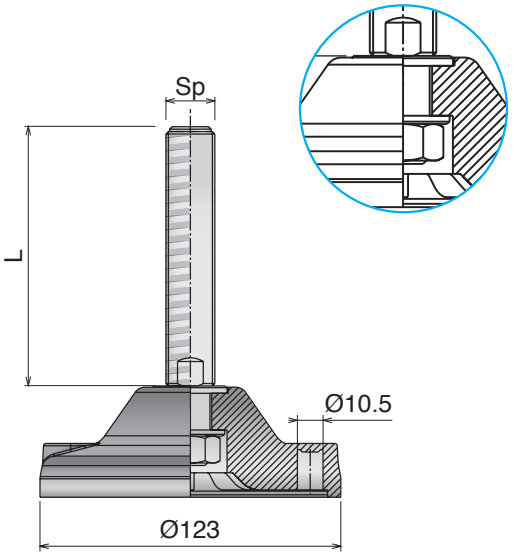

Piede diam. 123 mm / *Leveller diam. 123 mm* / *Gelenkfuss Diam. 123 mm*

Without antislip rubber

Part	SS	FeZn	Sp	TH	L		N
931	93102	93102Z	M20	200	148	16	30.000
931	93103	93103Z		250	198	16	
932	93202	93202Z	M24	200	148	19	
932	93203	93203Z		250	198	19	
933	93302	93302Z	M30	200	148	24	
933	93303	93303Z		250	198	24	

With antislip rubber

GLUE

Part	SS	FeZn	Sp	TH	L		N
931	93152	93152Z	M20	200	148	16	30.000
931	93153	93153Z		250	198	16	
932	93252	93252Z	M24	200	148	19	
932	93253	93253Z		250	198	19	
933	93352	93352Z	M30	200	148	24	
933	93353	93353Z		250	198	24	

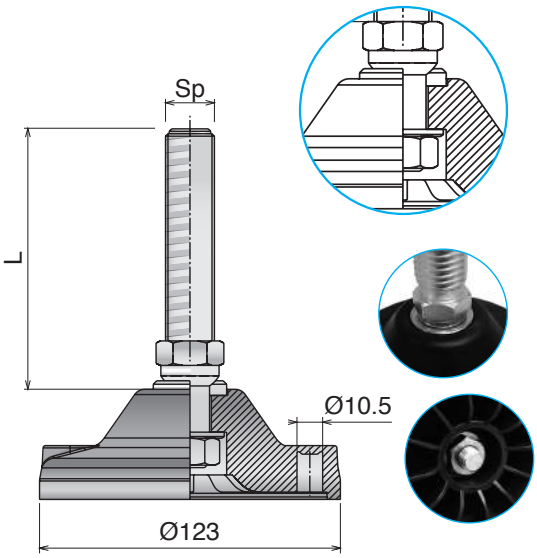

Piede diam. 123 mm / *Leveller diam. 123 mm* / *Gelenkfuss Diam. 123 mm*

Without antislip rubber

Part	SS	FeZn	Sp	TH	L		N
981	98102H	98102ZH	M20	200	148	24	30.000
981	98103H	98103ZH		250	198	24	
982	98202H	98202ZH	M24	200	148	24	
982	98203H	98203ZH		250	198	24	
983	98302H	98302ZH	M30	200	148	32	
983	98303H	98303ZH		250	198	32	

With antislip rubber

GLUE

Part	SS	FeZn	Sp	TH	L		N
981	98152H	98152ZH	M20	200	148	24	30.000
981	98153H	98153ZH		250	198	24	
982	98252H	98252ZH	M24	200	148	24	
982	98253H	98253ZH		250	198	24	
983	98352H	98352ZH	M30	200	148	32	
983	98353H	98353ZH		250	198	32	

Materiale / Material / Materialien:
Basi, stelo e rondella: Acciaio inox
Base plate, spindle and washer: Stainless steel
Fussplatte, Spindel und Scheibe: Edelstahl

919-980 Easy clean



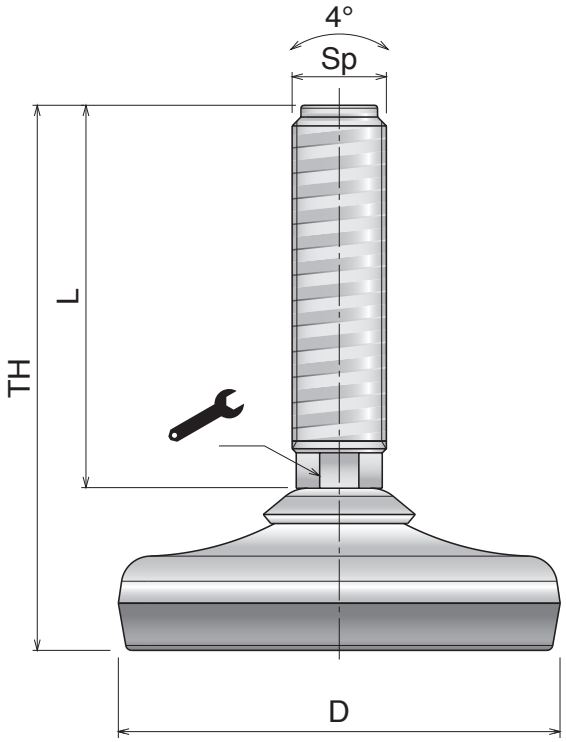

Accessori / *Accessories* / *Zubehör*



Dadi acciaio inox
Stainless steel nuts / Mutter Edelstahl

Part	Article-Nr.	Spindle
998	99802	M12
998	99804	M16
998	99805	M20
998	99806	M24
998	99807	M30

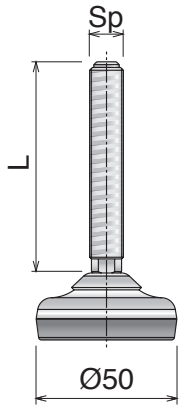

Piede diam. 50 mm
Leveller diam. 50 mm / Gelenkfuss Diam. 50 mm

Part	Article-Nr.	Sp	TH	L		N
919	91901		75	50	9	
919	91902	M12	100	75	9	
919	91903		150	125	9	
920	92001		90	65	13	
920	92002	M16	140	115	13	3.000
920	92003		190	165	13	
921	92101		90	65	16	
921	92102	M20	115	90	16	
921	92103		165	140	16	

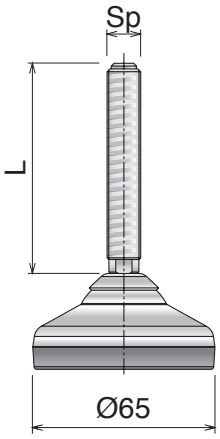

Piede diam. 65 mm
Leveller diam. 65 mm / Gelenkfuss Diam. 65 mm

Part	Article-Nr.	Sp	TH	L		N
972	97201		75	50	9	
972	97202	M12	100	75	9	
972	97203		150	125	9	
973	97301		90	65	13	
973	97302	M16	140	115	13	5.000
973	97303		190	165	13	
974	97401		90	65	16	
974	97402	M20	115	90	16	
974	97403		165	140	16	

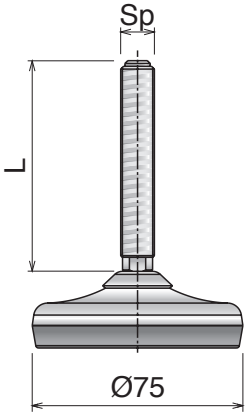

Piede diam. 75 mm
Leveller diam. 75 mm / Gelenkfuss Diam. 75 mm

Part	Article-Nr.	Sp	TH	L		N
922	92201		80	50	9	
922	92202	M12	105	75	9	
922	92203		155	125	9	
923	92301		95	65	13	
923	92302	M16	145	115	13	8.000
923	92303		195	165	13	
924	92401		95	65	16	
924	92402	M20	120	90	16	
924	92403		170	140	16	

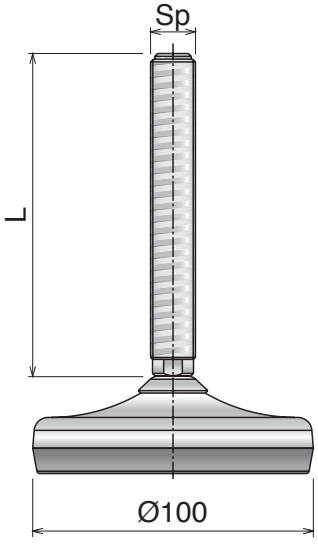

Piede diam. 100 mm
Leveller diam. 100 mm / Gelenkfuss Diam. 100 mm

Part	Article-Nr.	Sp	TH	L		N
925	92501		100	65	13	
925	92502	M16	150	115	13	
925	92503		200	165	13	
926	92601		125	90	16	
926	92602	M20	175	140	16	20.000
926	92603		225	190	16	
927	92701		125	90	19	
927	92702	M24	175	140	19	
927	92703		225	190	19	

919-980 *Easy clean*

Piedi / *Leveling pads / Gelenkfüsse*

Materiale / *Material / Materialien:*
Basi, stelo e rondella: Acciaio inox
Base plate, spindle and washer: Stainless steel
Fussplatte, Spindel und Scheibe: Edelstahl

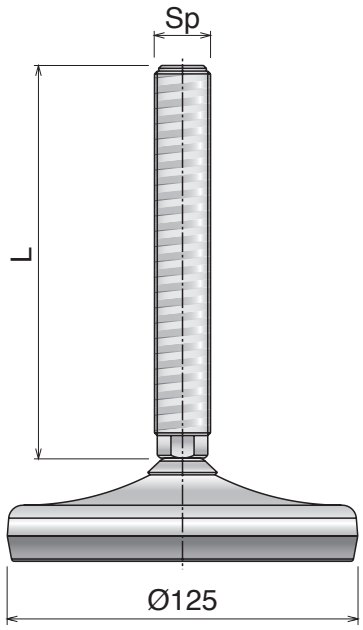

Piede diam. 125 mm
Leveller diam. 125 mm / Gelenkfuss Diam. 125 mm

Part	Article-Nr.	Sp	TH	L		N
928	92801		130	90	16	
928	92802	M20	180	140	16	
928	92803		230	190	16	
929	92901		130	90	19	
929	92902	M24	180	140	19	30.000
929	92903		230	190	19	
930	93001		155	115	24	
930	93002	M30	205	165	24	
930	93003		255	215	24	

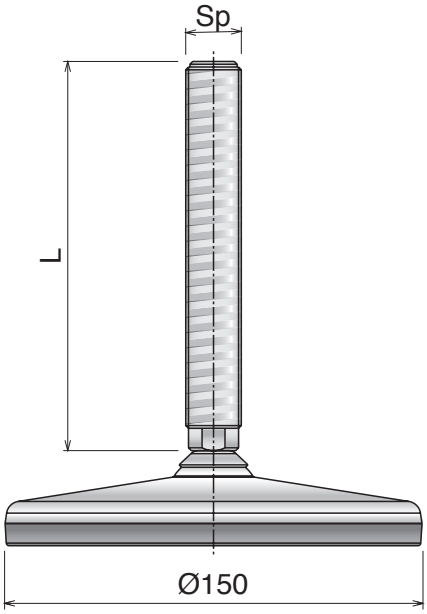

Piede diam. 150 mm
Leveller diam. 150 mm / Gelenkfuss Diam. 150 mm

Part	Article-Nr.	Sp	TH	L		N
975	97501		125	90	16	
975	97502	M20	175	140	16	
975	97503		225	190	16	
976	97601		175	140	19	
976	97602	M24	225	190	19	35.000
976	97603		285	250	19	
977	97702		175	140	24	
977	97703	M30	225	190	24	
977	97704		285	250	24	

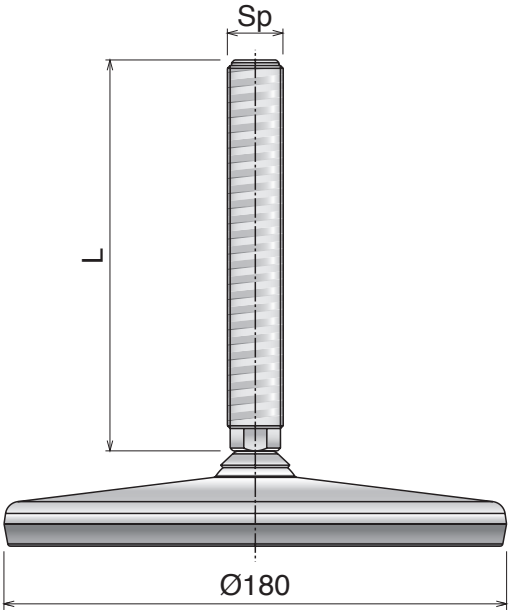

Piede diam. 180 mm
Leveller diam. 180 mm / Gelenkfuss Diam. 180 mm

Part	Article-Nr.	Sp	TH	L		N
978	97801		125	90	16	
978	97802	M20	175	140	16	
978	97803		225	190	16	
979	97902		125	90	19	
979	97903	M24	175	140	19	38.000
979	97904		225	190	19	
980	98003		225	190	24	
980	98004	M30	285	250	24	
980	98005		335	300	24	

Materiale / *Material* / *Materialien:*
Basi, stelo e rondella: Acciaio inox
Base plate, spindle and washer: Stainless steel
Fussplatte, Spindel und Scheibe: Edelstahl

985-991 *Easy clean*



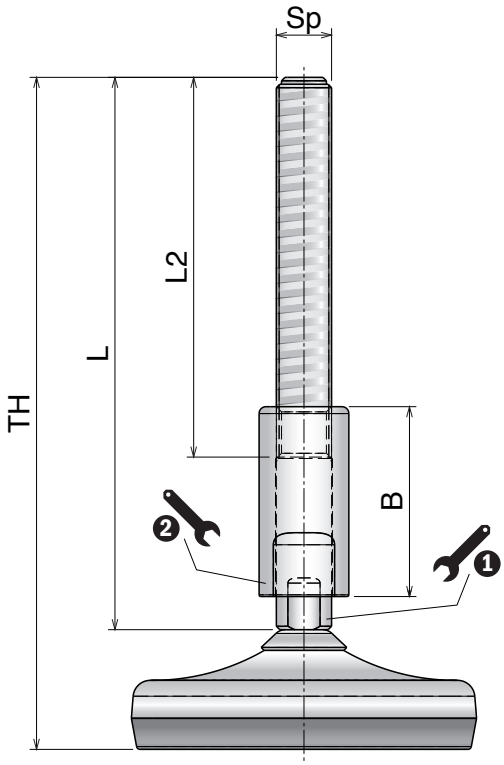

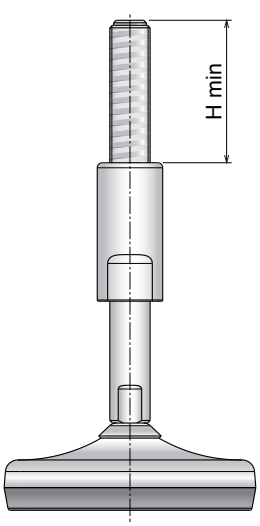

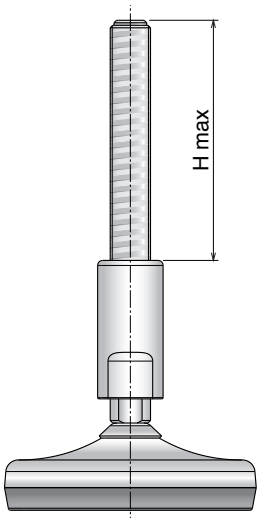

Adjustment range

	H min	H max
L: 160 / **B:** 55	56,6	95,4
L: 210 / **B:** 85	45,6	114,5

Accessori / *Accessories* / *Zubehör*



Dadi acciaio inox
Stainless steel nuts / Mutter Edelstahl

Part	Article-Nr.	Spindle
998	99804	M16
998	99805	M20
998	99806	M24

Materiale / *Material* / *Materialien:*
Basi, stelo e rondella: Acciaio inox
Base plate, spindle and washer: Stainless steel
Fussplatte, Spindel und Scheibe: Edelstahl

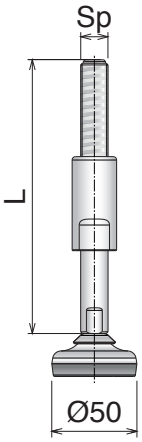

Piede diam. 50 mm
Leveller diam. 50 mm / Gelenkfuss Diam. 50 mm

Part	Article-Nr.	Sp	TH	L	L2	B	①	②
985	98501	M16	185	160	110	55	13	19
985	98502		235	210	130	85	13	19
985	98503	M20	185	160	110	55	16	24
985	98504		235	210	130	85	16	24
985	98505	M24	185	160	110	55	19	27
985	98506		235	210	130	85	19	27

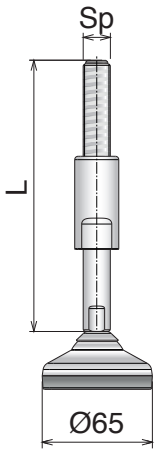

Piede diam. 65 mm
Leveller diam. 65 mm / Gelenkfuss Diam. 65 mm

Part	Article-Nr.	Sp	TH	L	L2	B	①	②
986	98601	M16	195	160	110	55	13	19
986	98602		245	210	130	85	13	19
986	98603	M20	195	160	110	55	16	24
986	98604		245	210	130	85	16	24
986	98605	M24	195	160	110	55	19	27
986	98606		245	210	130	85	19	27

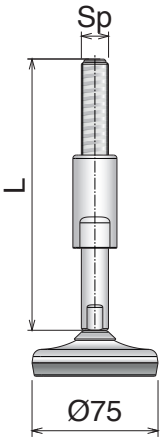

Piede diam. 75 mm
Leveller diam. 75 mm / Gelenkfuss Diam. 75 mm

Part	Article-Nr.	Sp	TH	L	L2	B	①	②
987	98701	M16	190	160	110	55	13	19
987	98702		240	210	130	85	13	19
987	98703	M20	190	160	110	55	16	24
987	98704		240	210	130	85	16	24
987	98705	M24	190	160	110	55	19	27
987	98706		240	210	130	85	19	27

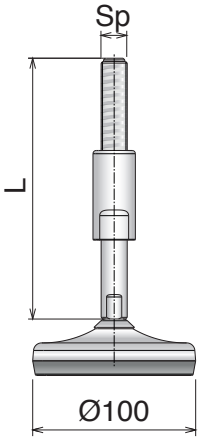

Piede diam. 100 mm
Leveller diam. 100 mm / Gelenkfuss Diam. 100 mm

Part	Article-Nr.	Sp	TH	L	L2	B	①	②
988	98801	M16	195	160	110	55	13	19
988	98802		245	210	130	85	13	19
988	98803	M20	195	160	110	55	16	24
988	98804		245	210	130	85	16	24
988	98805	M24	195	160	110	55	19	27
988	98806		245	210	130	85	19	27

Materiale / *Material / Materialien:*
Basi, stelo e rondella: Acciaio inox
Base plate, spindle and washer: Stainless steel
Fussplatte, Spindel und Scheibe: Edelstahl

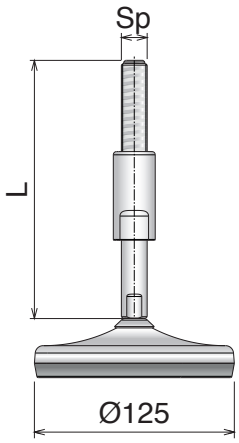

Piede diam. 125 mm
Leveller diam. 125 mm / Gelenkfuss Diam. 125 mm

Part	Article-Nr.	Sp	TH	L	L2	B	①	②
989	98901	M16	195	160	110	55	13	19
989	98902		245	210	130	85	13	19
989	98903	M20	195	160	110	55	16	24
989	98904		245	210	130	85	16	24
989	98905	M24	195	160	110	55	19	27
989	98906		245	210	130	85	19	27

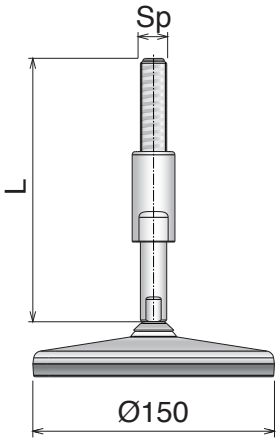

Piede diam. 150 mm
Leveller diam. 150 mm / Gelenkfuss Diam. 150 mm

Part	Article-Nr.	Sp	TH	L	L2	B	①	②
990	99001	M16	195	160	110	55	13	19
990	99002		245	210	130	85	13	19
990	99003	M20	195	160	110	55	16	24
990	99004		245	210	130	85	16	24
990	99005	M24	195	160	110	55	19	27
990	99006		245	210	130	85	19	27

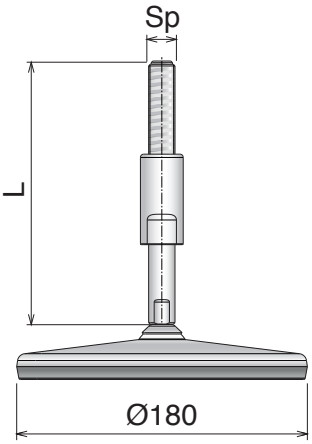

Piede diam. 180 mm
Leveller diam. 180 mm / Gelenkfuss Diam. 180 mm

Part	Article-Nr.	Sp	TH	L	L2	B	①	②
991	99101	M16	195	160	110	55	13	19
991	99102		245	210	130	85	13	19
991	99103	M20	195	160	110	55	16	24
991	99104		245	210	130	85	16	24
991	99105	M24	195	160	110	55	19	27
991	99106		245	210	130	85	19	27

Materiale / *Material / Materialien:*
Basi, stelo e rondella: Acciaio inox
Base plate, spindle and washer: Stainless steel
Fussplatte, Spindel und Scheibe: Edelstahl

934-939 *Easy clean*



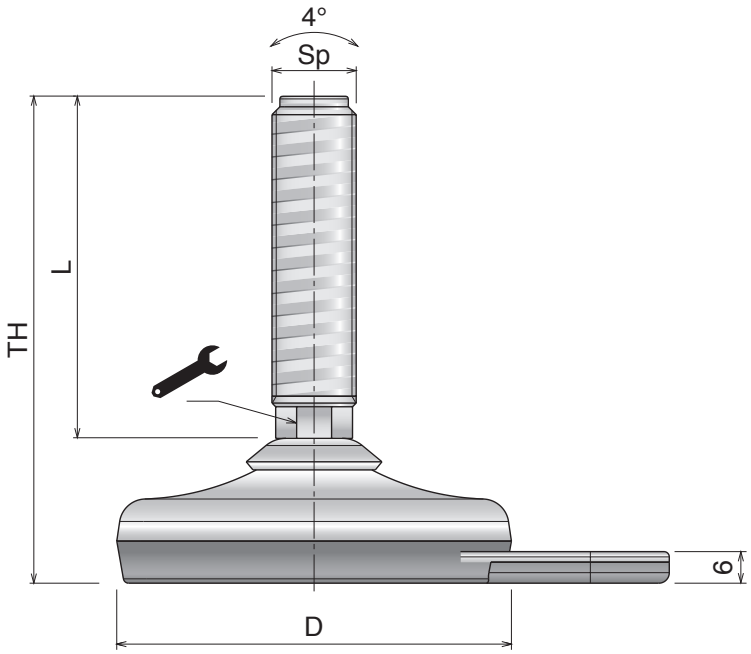

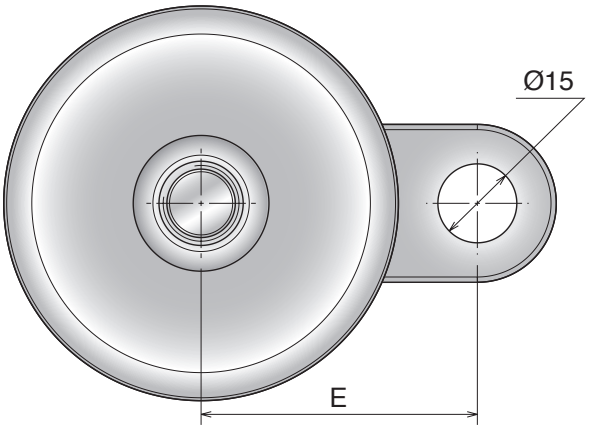

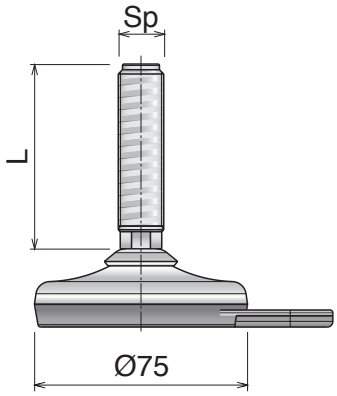

Piede diam. 75 mm con fori fissaggio
Leveller diam. 75 mm with fixing holes
Stellfuss diam. 75 mm mit Befestigungsbohrung

Part	Article-Nr.	Sp	E	TH	L		N
934	93401		52,5	80	50	9	
934	93402	M12	52,5	105	75	9	
934	93403		52,5	155	125	9	
935	93501		52,5	95	65	13	
935	93502	M16	52,5	145	115	13	8.000
935	93503		52,5	195	165	13	
936	93601		52,5	95	65	16	
936	93602	M20	52,5	120	90	16	
936	93603		52,5	170	140	16	

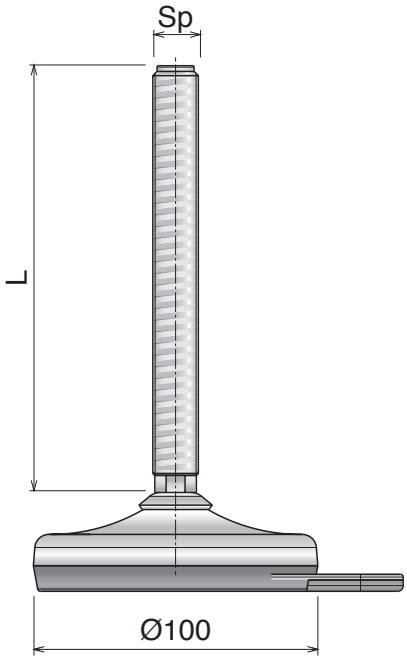

Piede diam. 100 mm con fori fissaggio
Leveller diam. 100 mm with fixing holes
Stellfuss diam. 100 mm mit Befestigungsbohrung

Part	Article-Nr.	Sp	E	TH	L		N
937	93701		65	100	65	13	
937	93702	M16	65	150	115	13	
937	93703		65	200	165	13	
938	93801		65	125	90	16	
938	93802	M20	65	175	140	16	20.000
938	93803		65	225	190	16	
939	93901		65	125	90	19	
939	93902	M24	65	175	140	19	
939	93903		65	225	190	19	

Accessori / *Accessories / Zubehör*



Dadi acciaio inox
Stainless steel nuts / Mutter Edelstahl

Part	Article-Nr.	Spindle
998	99802	M12
998	99804	M16
998	99805	M20
998	99806	M24
998	99807	M30

Materiale / Material / Materialien:
Basi, stelo e rondella: Acciaio inox
Base plate, spindle and washer: Stainless steel
Fussplatte, Spindel und Scheibe: Edelstahl

992-993 Easy clean



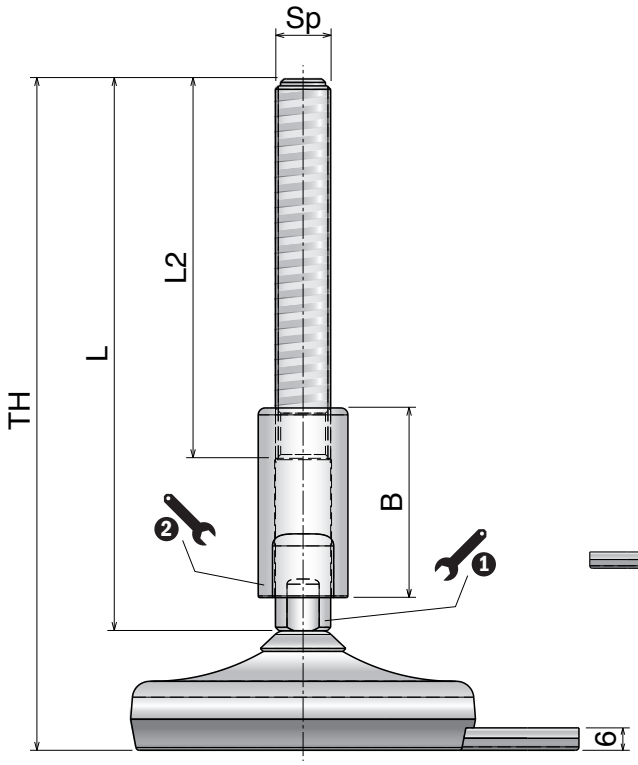

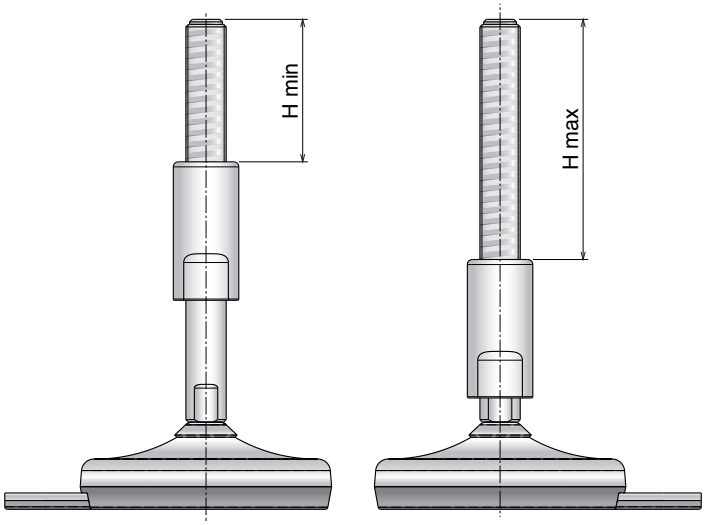

Adjustment range

	H min	H max
L: 160 / **B:** 55	56,6	95,4
L: 210 / **B:** 85	45,6	114,5

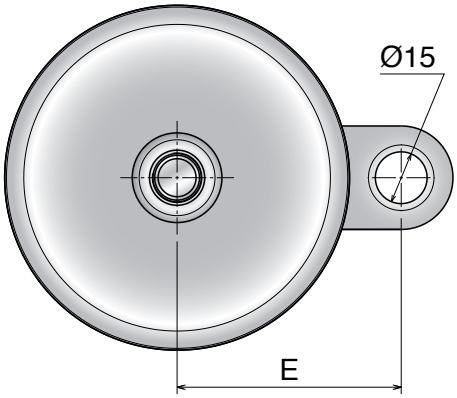

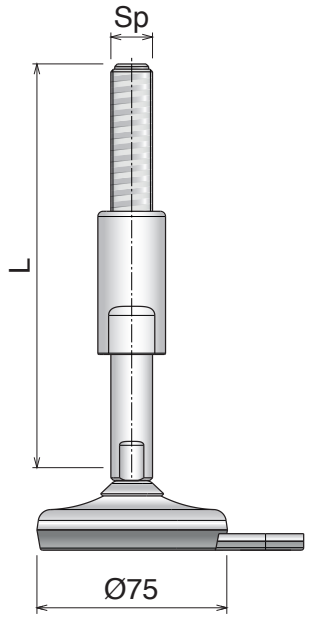

Piede diam. 75 mm con fori fissaggio
Leveller diam. 75 mm with fixing holes
Stellfuss diam. 75 mm mit Befestigungsbohrung

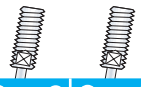

Part	Article-Nr.	Sp	TH	L	L2	B	E	①	②
992	99201	M16	190	160	110	55	52,5	13	19
992	99202		240	210	130	85	52,5	13	19
992	99203	M20	190	160	110	55	52,5	16	24
992	99204		240	210	130	85	52,5	16	24
992	99205	M24	190	160	110	55	52,5	19	27
992	99206		240	210	130	85	52,5	19	27

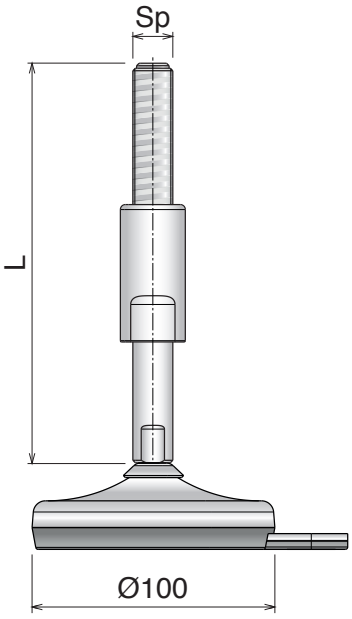

Piede diam. 100 mm con fori fissaggio
Leveller diam. 100 mm with fixing holes
Stellfuss diam. 100 mm mit Befestigungsbohrung

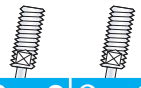

Part	Article-Nr.	Sp	TH	L	L2	B	E	①	②
993	99301	M16	195	160	110	55	65	13	19
993	99302		245	210	130	85	65	13	19
993	99303	M20	195	160	110	55	65	16	24
993	99304		245	210	130	85	65	16	24
993	99305	M24	195	160	110	55	65	19	27
993	99306		245	210	130	85	65	19	27

Accessori / *Accessories* / *Zubehör*



Dadi acciaio inox
Stainless steel nuts / Mutter Edelstahl

Part	Article-Nr.	Spindle
998	99804	M16
998	99805	M20
998	99806	M24

Materiale / ***Material*** / ***Materialien:***
Acciaio inox o Ferro zincato
Stainless steel or Zinc plated steel
Edelstahl oder Stahl Verzinkt

960-971

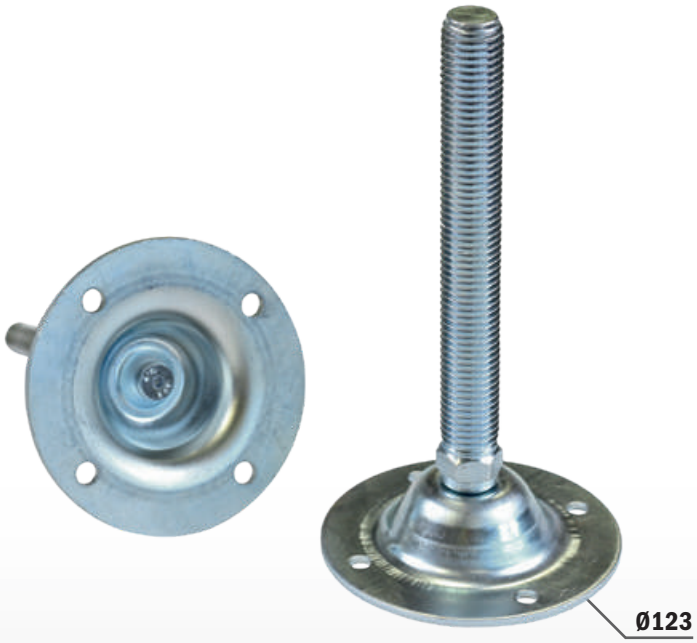

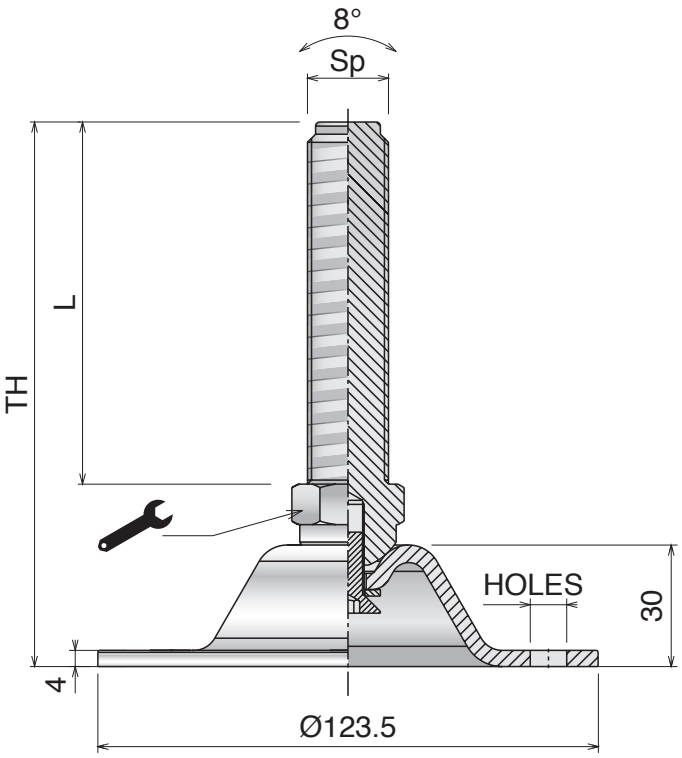

Accessori / *Accessories* / *Zubehör*



Dadi acciaio inox
Stainless steel nuts / Mutter Edelstahl

Part	Article-Nr.	Spindle
998	99804	M16
998	99805	M20
998	99806	M24
998	99807	M30

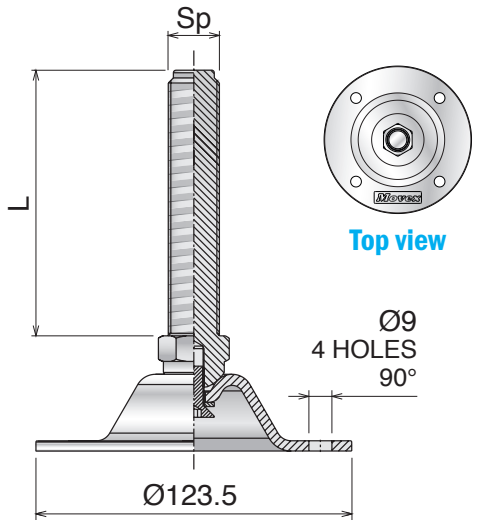

Piede diam. 123 mm con 4 fori 90°
Leveller diam. 123 mm with 4 holes 90°
Stellfuss diam. 123 mm mit 4 Befestigungsbohrung 90°

Part	SS	FeZn	Sp	TH	L		N
960	**96001H**	**96001ZH**	M16	155	115	20	10.000
960	**96002H**	**96002ZH**		175	135	20	
961	**96101H**	**96101ZH**	M20	160	115	24	
961	**96102H**	**96102ZH**		175	135	24	
962	**96201H**	**96201ZH**	M24	170	125	24	
962	**96202H**	**96202ZH**		230	185	24	
963	**96301H**	**96301ZH**	M30	170	125	30	
963	**96302H**	**96302ZH**		230	185	30	

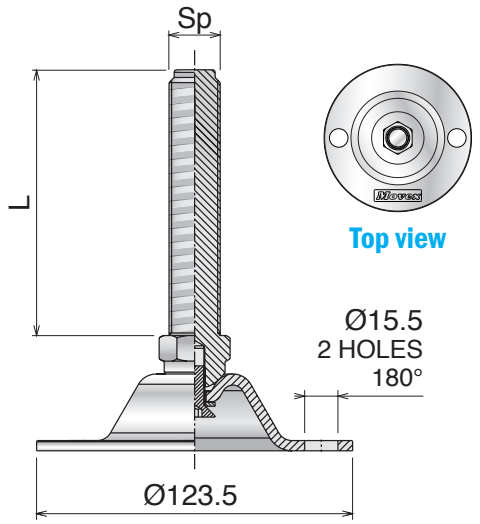

Piede diam. 123 mm con 2 fori 180°
Leveller diam. 123 mm with 2 holes 180°
Stellfuss diam. 123 mm mit 2 Befestigungsbohrung 180°

Part	SS	FeZn	Sp	TH	L		N
964	**96401H**	**96401ZH**	M16	155	115	20	10.000
964	**96402H**	**96402ZH**		175	135	20	
965	**96501H**	**96501ZH**	M20	160	115	24	
965	**96502H**	**96502ZH**		175	135	24	
966	**96601H**	**96601ZH**	M24	170	125	24	
966	**96602H**	**96602ZH**		230	185	24	
967	**96701H**	**96701ZH**	M30	170	125	32	
967	**96702H**	**96702ZH**		230	185	32	

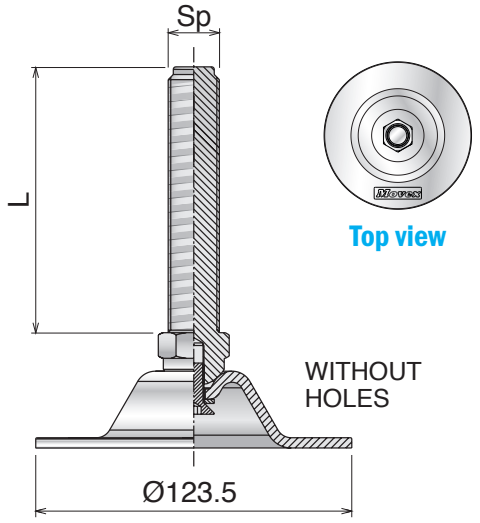

Piede diam. 123 mm senza fori
Leveller diam. 123 mm without holes
Stellfuss diam. 123 mm ohne Befestigungsbohrung

Part	SS	FeZn	Sp	TH	L		N
968	**96801H**	**96801ZH**	M16	155	115	20	10.000
968	**96802H**	**96802ZH**		175	135	20	
969	**96901H**	**96901ZH**	M20	160	115	24	
969	**96902H**	**96902ZH**		175	135	24	
970	**97001H**	**97001ZH**	M24	170	125	24	
970	**97002H**	**97002ZH**		230	185	24	
971	**97101H**	**97101ZH**	M30	170	125	30	
971	**97102H**	**97102ZH**		230	185	30	

Movex®

movexii.com



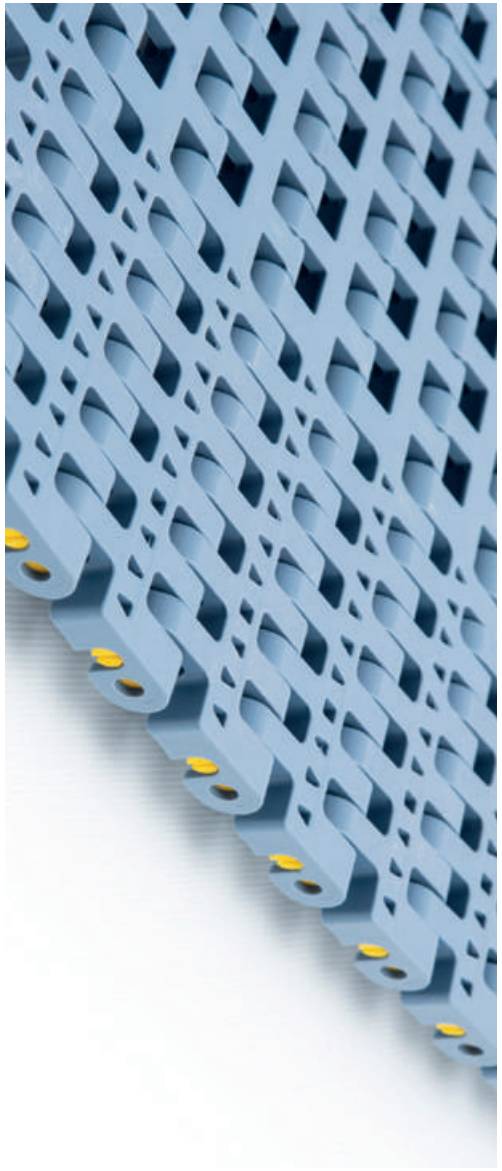



1847



Sprockets position manual

510

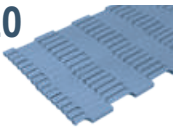

510 FT Pag 482

520

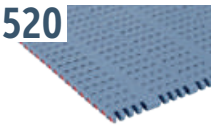

520 HD FT

520 PRO LBP Pag 482

520

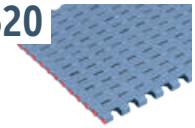

520 FT

520 FG

520 GT

520 LBP

520 FTT Pag 483

521

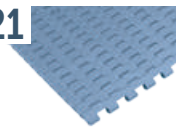

521 FT Pag 484

500



500 RR Pag 484

590

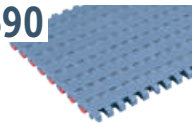

590 FT Pag 485

590 FT One track Belt Pag 486

590 FTT Pag 487

525

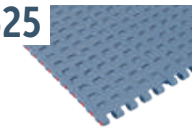

525 HD FT

525 HD FG

525 HD GT

525 HD GT Side indent

525 FTT Pag 488

530

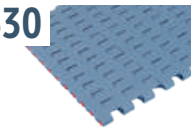

530 FT

530 GT

530 GT Side indent

530 LBP

530 FTT Pag 489

550

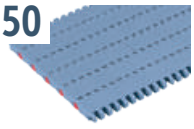

550 FT

550 FG

550 GT

550 GT Side indent

550 FTT Pag 490

551

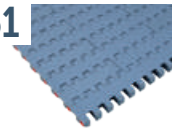

551 FT

551 GT

551 GT Side indent

551 LBP

551 PRO LBP

551 FTT Pag 491

552

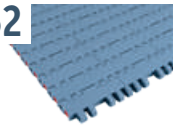

552 FT

552 PT

552 GT

552 GT Side indent Pag 492

552 FT One track Belt

552 FTT Pag 493

556

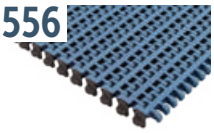

556 FT

556 GT Pag 494

600

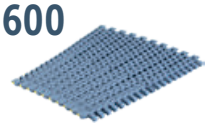

600 Standard Pag 495

600 Heavy duty Pag 496/497

600 Heavy duty with Bearings Pag 498/499

600 Small radius Pag 500/501

600 Heavy duty/ Small radius Pag 502/503

600 Heavy duty/ Small radius with Bearings Pag 504/505

Support sprocket

Split support roller Pag 506

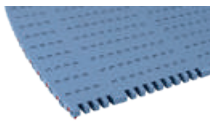

ZERO CONTACT

Dedicated Sprockets Pag 507

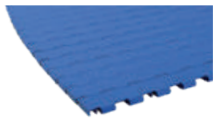

ZERO CONTACT PRO

1 Track version

R586 Pag 508

R756 Pag 509

R1011 Pag 510

2 Track version

R586 Pag 511

R756 Pag 512

R1011 Pag 513

Dedicated Sprockets Pag 514

Belt width (in/mm)	Recommended n° of sprockets*
3 / 76.2	1
6 / 152.4	2
9/ 228.6	3
12 / 304.5	4
15 / 381.0	5
18 / 457.2	6
21 / 533.4	7
24 / 609.6	8

***If more sprockets are required contact application engineering.**

IMPORTANT

Add sprocket positions every 76,2 mm according to 76,2 mm width increments of the belt corresponding with 76,2 mm conveyor track pitch system.

*It's **NOT** possible to place the sprockets in this position.*

SPROCKETS POSITION FOR:

510 FT

BOTTOM VIEW

Contact point

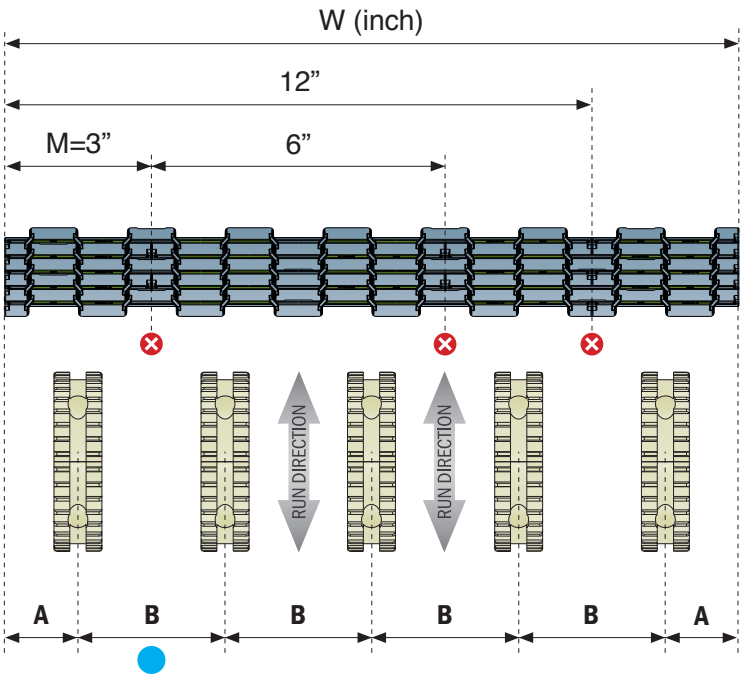

A: *1,5” (38,1 mm)*	**B:** *3” (76,2 mm /steps)*

Belt width (in/mm)	Recommended n° of sprockets*
85	1
170	2
255	3
340	4
425	5
510	6
595	7
680	8

***If more sprockets are required contact application engineering.**

IMPORTANT

Add sprocket positions every 85 mm according to 85 mm width increments of the belt corresponding with 85 mm conveyor track pitch system.

*It's **NOT** possible to place the sprockets in this position.*

SPROCKETS POSITION FOR:

520 HD FT - 520 PRO LBP

BOTTOM VIEW

Contact point

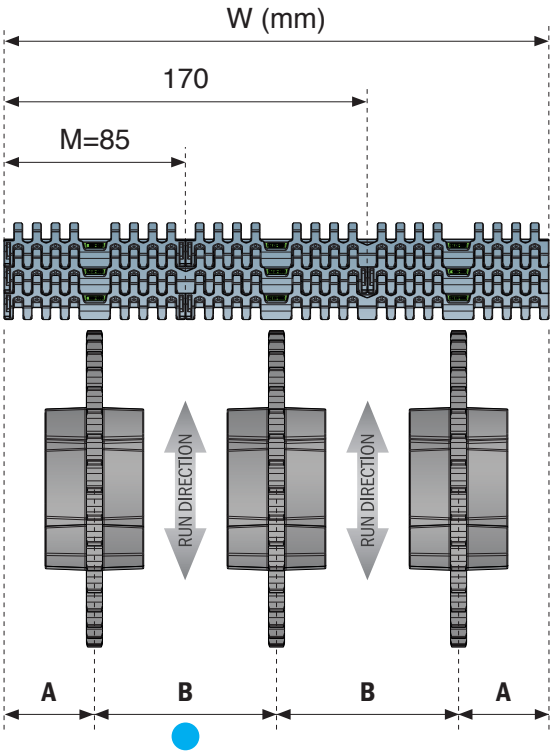

A: *46,5 mm*	**B:** *85 mm (steps)*

SPROCKETS POSITION FOR:
520 FT - 520 FG - 520 GT - 520 LBP- 520 PRO LBP

BOTTOM VIEW
Contact point

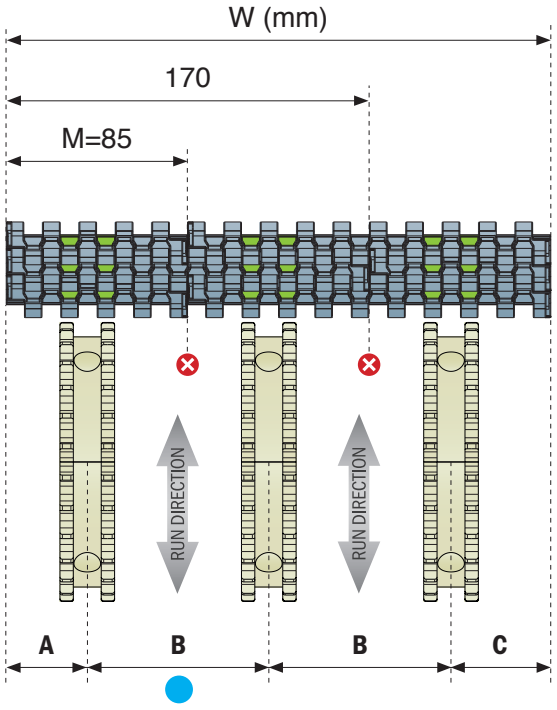

A: 38,25 mm	B: 85 mm (steps)	C: 46,75 mm

Belt width (mm)	Recommended n° of sprockets*
85	1
170	2
255	3
340	4
425	5
510	6
595	7
680	8
765	9
850	10
935	11
1020	12
1105	13
1190	14
1275	15
1360	16
1445	17
1530	18

***If more sprockets are required contact application engineering.**

SPROCKETS POSITION FOR:
520 FTT

BOTTOM VIEW
Contact point

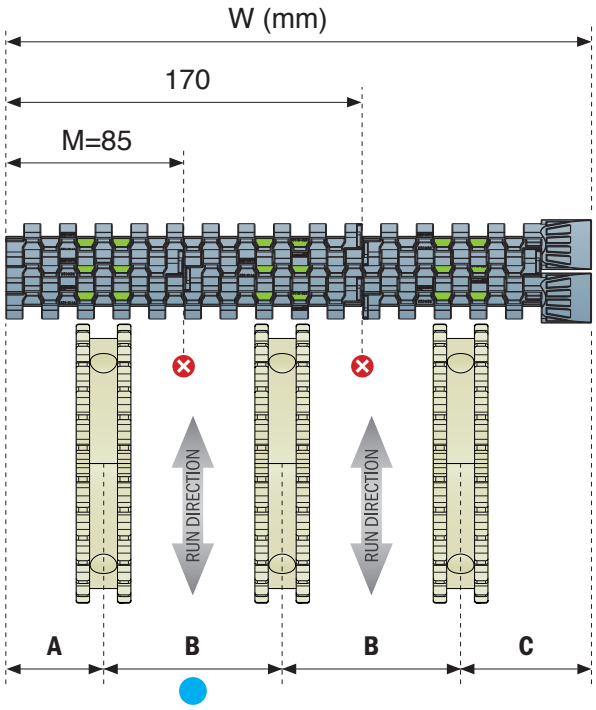

A: 46,75 mm	B: 85 mm (steps)	C: 62,25 mm

IMPORTANT

Add sprocket positions every 85 mm according to 85 mm width increments of the belt corresponding with 85 mm conveyor track pitch system.

*It's **NOT** possible to place the sprockets in this position.*

SPROCKETS POSITION FOR:
521 FT

BOTTOM VIEW
Contact point

K750 *7,5" (190,5 mm)*

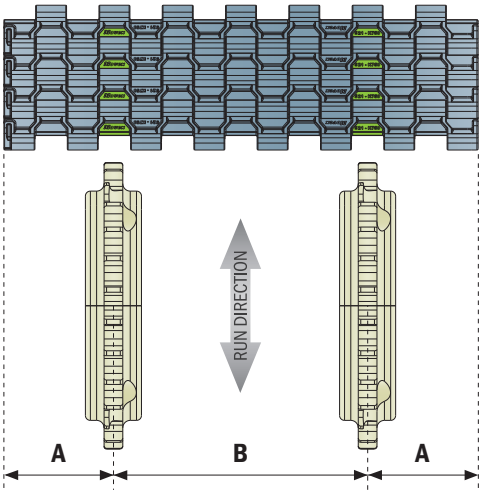

A: *2,25" (57,15 mm)* | **B:** *3" (76,2 mm /steps)*

Belt width (in/mm)	Recommended n° of sprockets*
3 / 76.2	1
6 / 152.4	2
9 / 228.6	3
12 / 304.5	4
15 / 381.0	5
18 / 457.2	6
21 / 533.4	7
24 / 609.6	8
27 / 685.8	9
30 / 762.0	10
33 / 838.2	11
36 / 914.4	12

***If more sprockets are required contact application engineering.**

IMPORTANT

Add sprocket positions every 76,2 mm according to 76,2 mm width increments of the belt corresponding with 76,2 mm conveyor track pitch system.

*It's **NOT** possible to place the sprockets in this position.*

SPROCKETS POSITION FOR:
500 RR

BOTTOM VIEW
Contact point

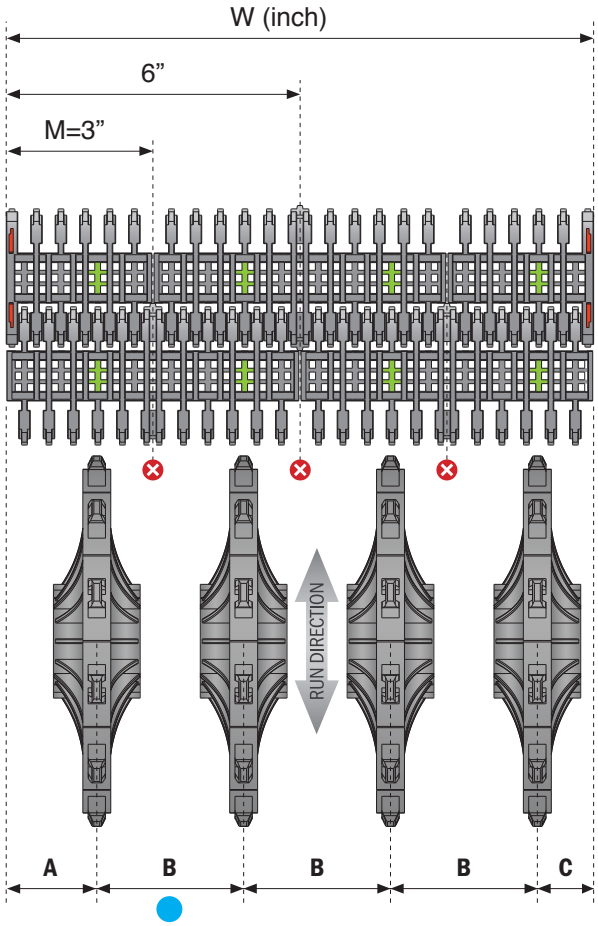

A: *1,85" (47 mm)*
B: *3" (76,2 mm)*
C: *1,15" (29,2 mm)*

1 Gearmotor section

Contact point

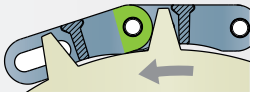

SPROCKETS POSITION FOR: **590 FT**

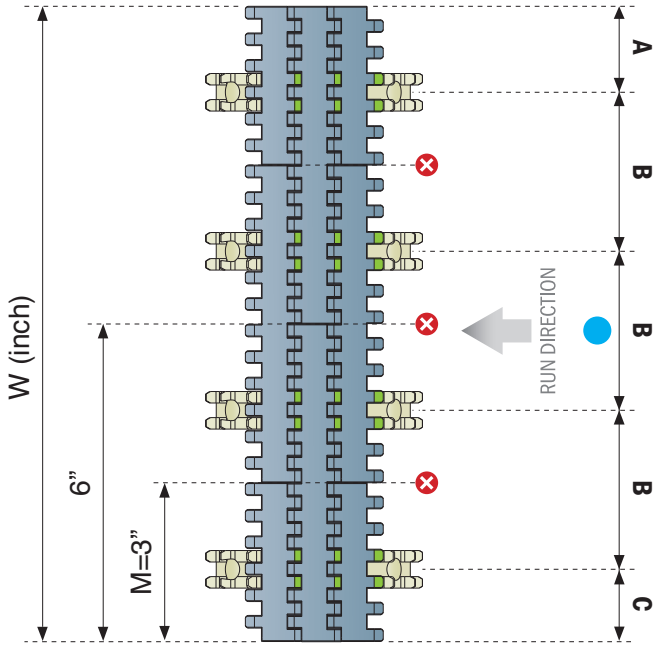

A: 1,62” (41,2 mm)	B: 3” (76,2 mm /steps)	C: 1,37” (34,9 mm)

2 Return section

Contact point

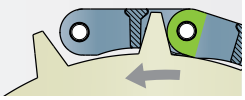

SPROCKETS POSITION FOR: **590 FT**

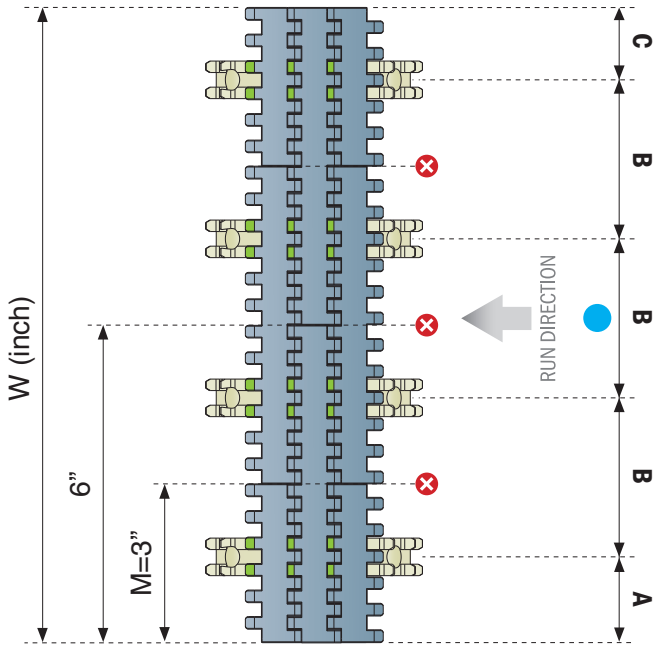

A: 1,62” (41,2 mm)	B: 3” (76,2 mm /steps)	C: 1,37” (34,9 mm)



STRAIGHT Running

Belt width (in/mm)	Recommended n° of sprockets*
3 / 76.2	1
6 / 152.4	2
9 / 228.6	3
12 / 304.5	4
15 / 381.0	5
18 / 457.2	6
21 / 533.4	7
24 / 609.6	8
27 / 685.8	9
30 / 762.0	10
33 / 838.2	11
36 / 914.4	12
39 / 990.6	13
42 / 1066.8	14
45 / 1143.0	15
48 / 1219.2	16
51 / 1295.4	17
54 / 1371.6	18

***If more sprockets are required contact application engineering.**

IMPORTANT

● *Add sprocket positions every 76,2 mm according to 76,2 mm width increments of the belt corresponding with 76,2 mm conveyor track pitch system.*

⊗ *It’s **NOT** possible to place the sprockets in this position.*



STRAIGHT Running

Belt width (in/mm)	Recommended n° of sprockets*
3 / 76.2	1
6 / 152.4	2
9 / 228.6	3
12 / 304.5	4
15 / 381.0	5
18 / 457.2	6
21 / 533.4	7
24 / 609.6	8
27 / 685.8	9
30 / 762.0	10
33 / 838.2	11
36 / 914.4	12
39 / 990.6	13
42 / 1066.8	14
45 / 1143.0	15
48 / 1219.2	16
51 / 1295.4	17
54 / 1371.6	18

***If more sprockets are required contact application engineering.**

IMPORTANT

Add sprocket positions every 76,2 mm according to 76,2 mm width increments of the belt corresponding with 76,2 mm conveyor track pitch system.

1 Gearmotor section

Contact point

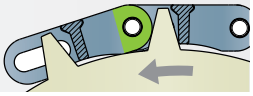

SPROCKETS POSITION FOR: **590 FT One track Belt**

K325 3,25" (82,55 mm)

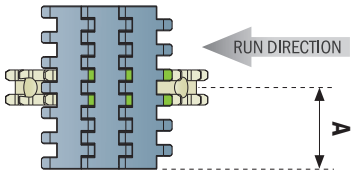

A: 1,62" (41,2 mm)

K450 4,5" (114,3 mm)

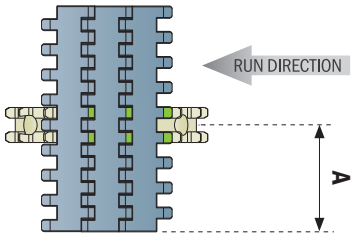

A: 2,12" (54 mm)

K750 7,5" (190,5 mm)

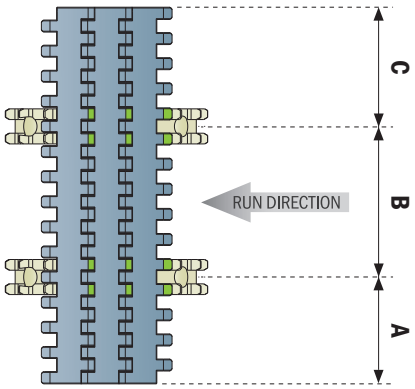

A: 2,12" (54 mm)
B: 3" (76,2 mm)
C: 2,37" (60,3 mm)

2 Return section

Contact point

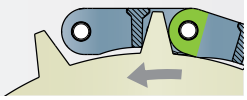

SPROCKETS POSITION FOR: **590 FT One track Belt**

K325 3,25" (82,55 mm)

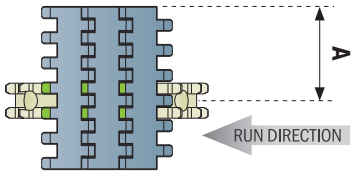

A: 1,87" (47,55 mm)

K450 4,5" (114,3 mm)

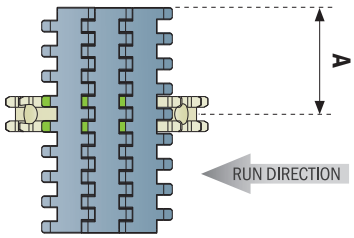

A: 2,12" (54 mm)

K750 7,5" (190,5 mm)

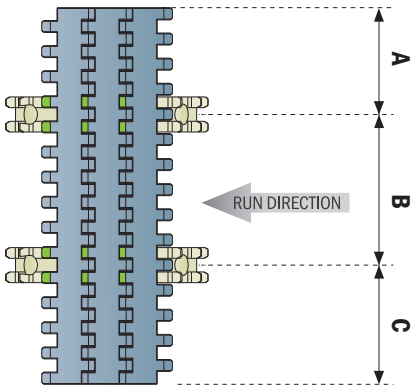

A: 2,12" (54 mm)
B: 3" (76,2 mm)
C: 2,37" (60,3 mm)

Movex

1 Gearmotor section

Contact point

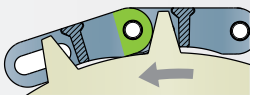

SPROCKETS POSITION FOR: **590 FTT**

K450 4,5" (114,3 mm)

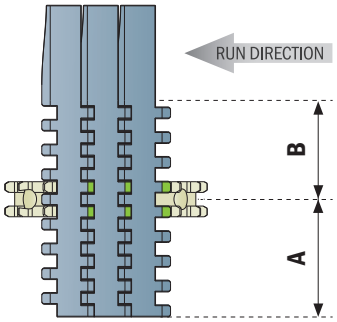

A min: 2,37" (60,3 mm)
B min: 2" (50,8 mm)

K750 7,5" (190,5 mm)

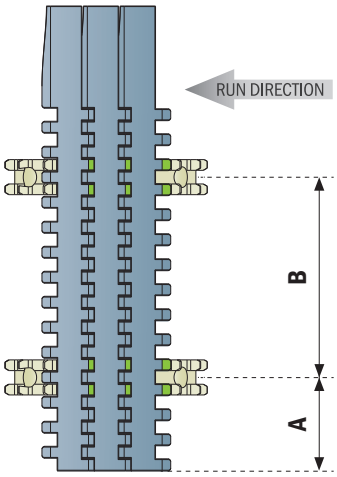

A min: 1,87" (47,55 mm)
B min: 4" (101,6 mm)

2 Return section

Contact point

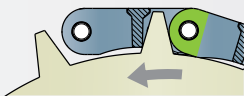

SPROCKETS POSITION FOR: **590 FTT**

K450 4,5" (114,3 mm)

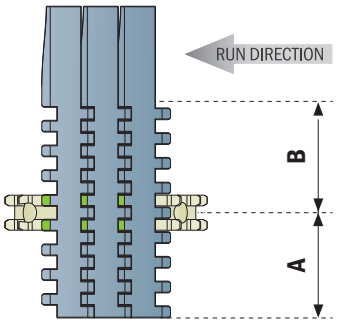

A min: 2,12" (54 mm)
B min: 2,12" (54 mm)

K750 7,5" (190,5 mm)

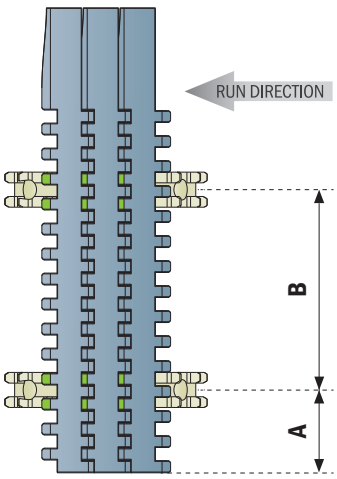

A min: 1,62" (41,2 mm)
B min: 4" (101,6 mm)



590 FTT Running

Belt width (in/mm)	Recommended n° of sprockets*
3 / 76.2	1
6 / 152.4	2
9 / 228.6	3
12 / 304.5	4
15 / 381.0	5
18 / 457.2	6
21 / 533.4	7
24 / 609.6	8
27 / 685.8	9
30 / 762.0	10
33 / 838.2	11
36 / 914.4	12
39 / 990.6	13
42 / 1066.8	14
45 / 1143.0	15
48 / 1219.2	16
51 / 1295.4	17
54 / 1371.6	18

***If more sprockets are required contact application engineering.**

IMPORTANT

Add sprocket positions every 76,2 mm according to 76,2 mm width increments of the belt corresponding with 76,2 mm conveyor track pitch system.

Belt width (mm)	Recommended n° of sprockets*
85	1
170	2
255	3
340	4
425	5
510	6
595	7
680	8
765	9
850	10
935	11
1020	12
1105	13
1190	14
1275	15
1360	16
1445	17
1530	18

***If more sprockets are required contact application engineering.**

SPROCKETS POSITION FOR:

525 HD FT - 525 HD FG - 525 HD GT - 525 HD GTsi

BOTTOM VIEW
Contact point

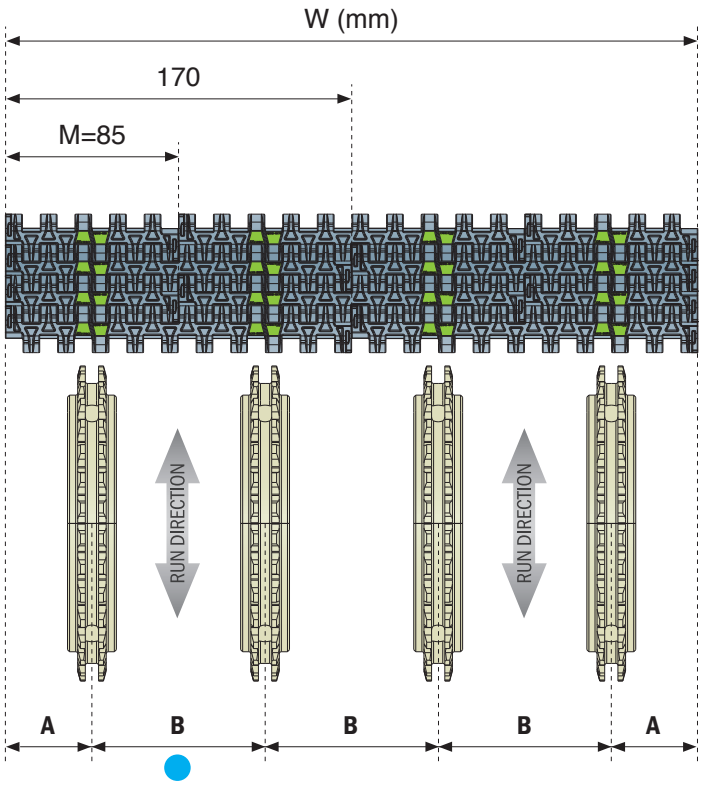

A minimum: *42,5 mm* | **B minimum:** *85 mm (steps)*

SPROCKETS POSITION FOR:

525 FTT

BOTTOM VIEW
Contact point

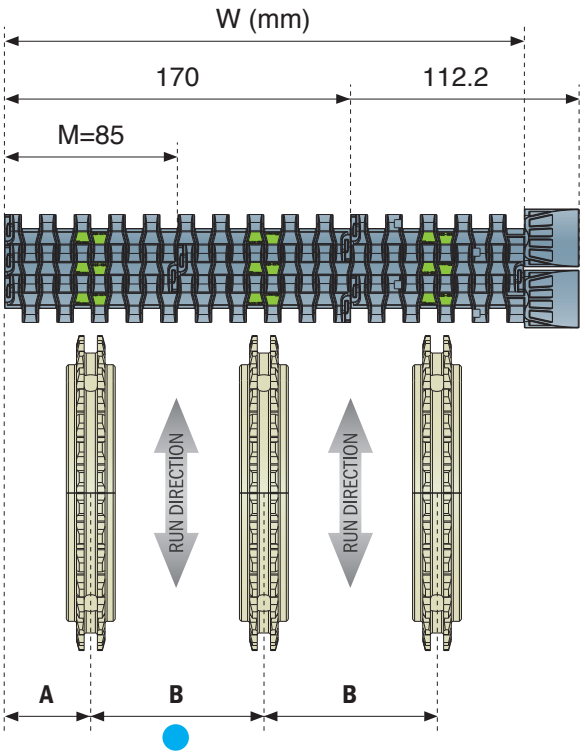

A minimum: *42,5 mm* | **B minimum:** *85 mm (steps)*

IMPORTANT

Add sprocket positions every 85 mm according to 85 mm width increments of the belt corresponding with 85 mm conveyor track pitch system.

Movex

SPROCKETS POSITION FOR:
530 FT - 530 GT - 530 GTsi - 530 LBP

BOTTOM VIEW
Contact point

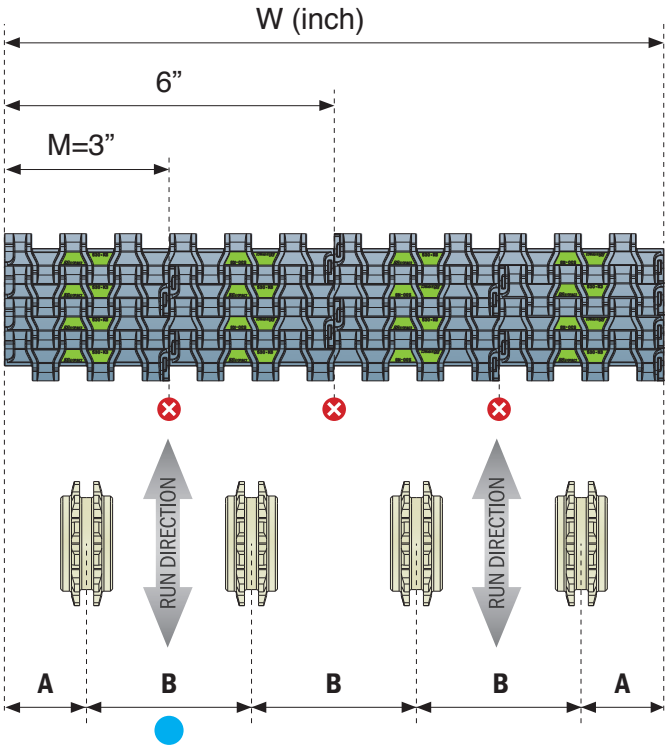

A: *1,5” (38,1 mm)* | **B:** *3” (76,2 mm /steps)*

Belt width (in/mm)	Recommended n° of sprockets*
3 / 76.2	1
6 / 152.4	2
9 / 228.6	3
12 / 304.5	4
15 / 381.0	5
18 / 457.2	6
21 / 533.4	7
24 / 609.6	8
27 / 685.8	9
30 / 762.0	10
33 / 838.2	11
36 / 914.4	12
39 / 990.6	13
42 / 1066.8	14
45 / 1143.0	15
48 / 1219.2	16
51 / 1295.4	17
54 / 1371.6	18

***If more sprockets are required contact application engineering.**

SPROCKETS POSITION FOR:
530 FTT

BOTTOM VIEW
Contact point

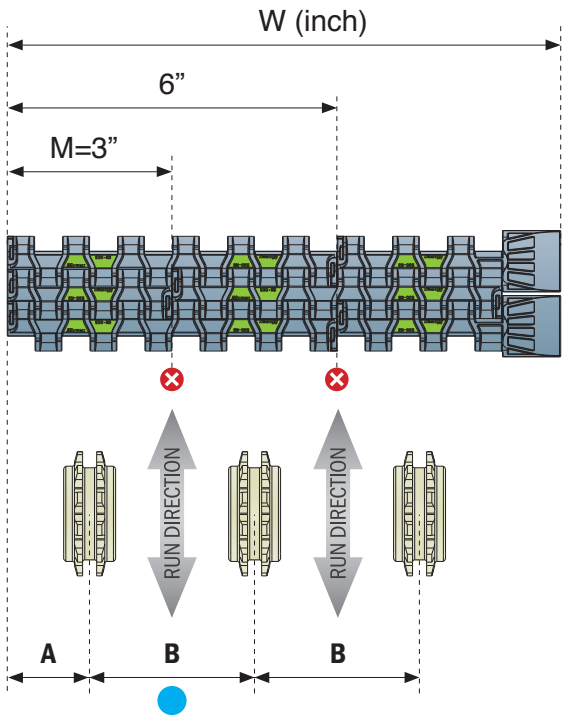

A: *1,5” (38,1 mm)* | **B:** *3” (76,2 mm /steps)*

IMPORTANT

Add sprocket positions every 76,2 mm according to 76,2 mm width increments of the belt corresponding with 76,2 mm conveyor track pitch system.

*It’s **NOT** possible to place the sprockets in this position.*

Belt width (mm)	Recommended n° of sprockets*
85	1
170	2
255	3
340	4
425	5
510	6
595	7
680	8
765	9
850	10
935	11
1020	12
1105	13
1190	14
1275	15
1360	16
1445	17
1530	18

***If more sprockets are required contact application engineering.**

SPROCKETS POSITION FOR:
550 FT - 550 FG - 550 GT - 550 GTsi

BOTTOM VIEW
Contact point

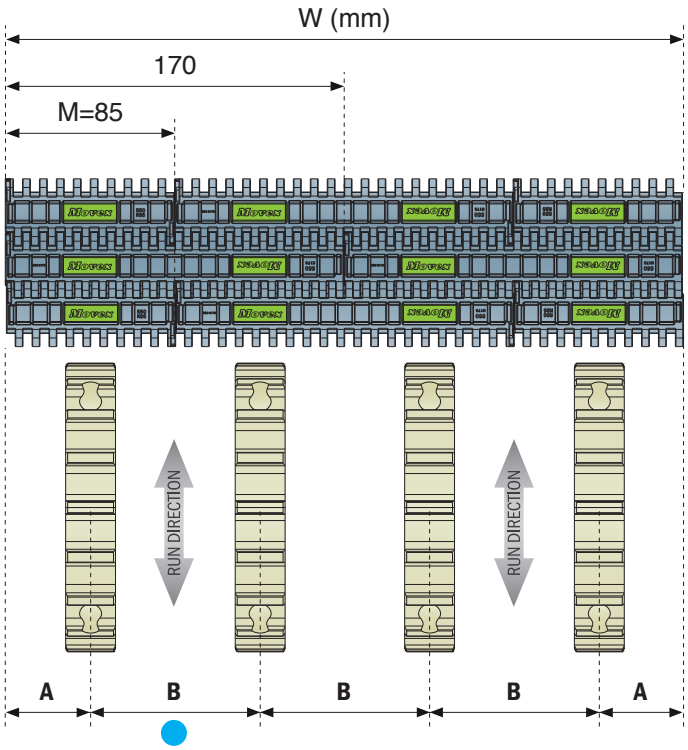

A minimum: *42,5 mm*	**B minimum:** *85 mm (steps)*

SPROCKETS POSITION FOR:
550 FTT

BOTTOM VIEW
Contact point

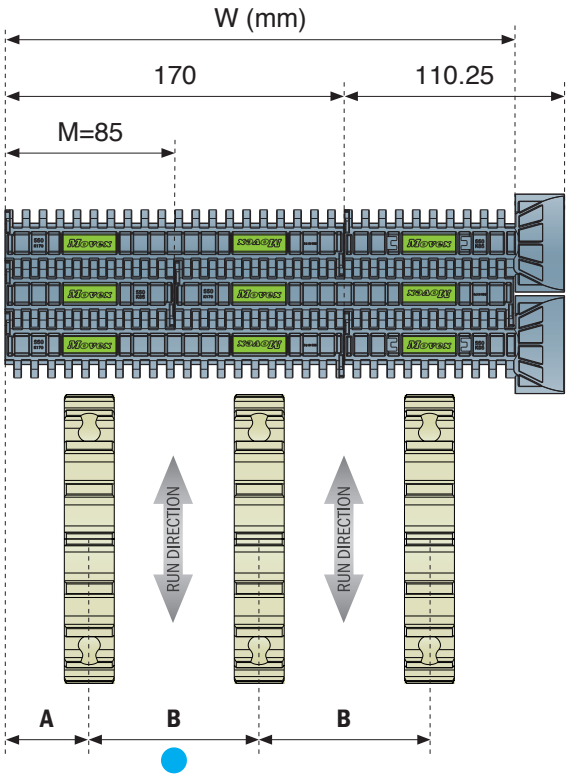

A minimum: *42,5 mm*	**B minimum:** *85 mm (steps)*

IMPORTANT

Add sprocket positions every 85 mm according to 85 mm width increments of the belt corresponding with 85 mm conveyor track pitch system.

SPROCKETS POSITION FOR:
551 FT - 551 GT - 551 GTsi - 551 LBP - 551 PRO LBP

BOTTOM VIEW
Contact point

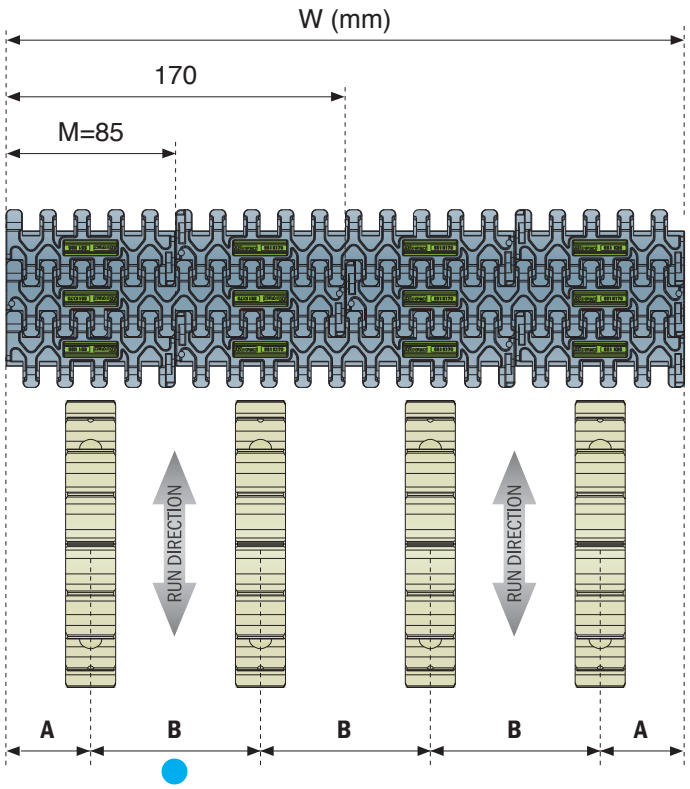

A minimum: *42,5 mm* | **B minimum:** *85 mm (steps)*

SPROCKETS POSITION FOR:
551 FTT

BOTTOM VIEW
Contact point

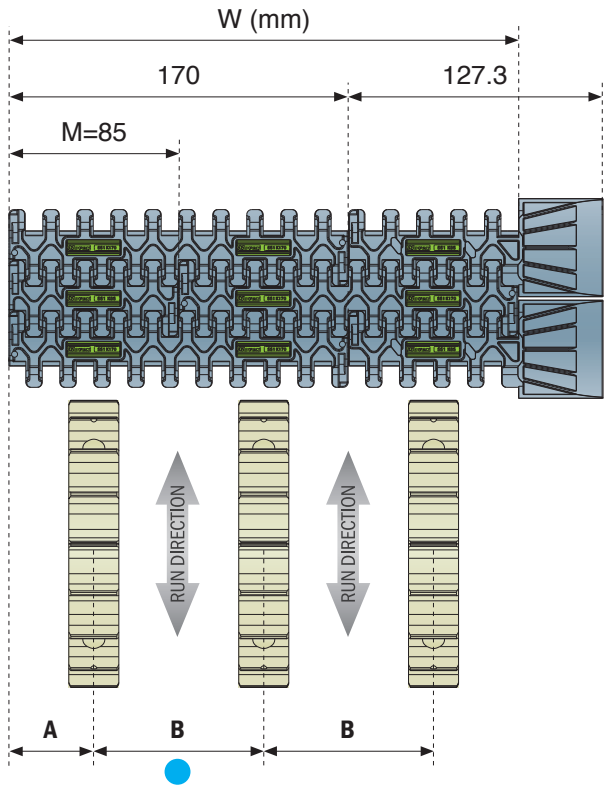

A minimum: *42,5 mm* | **B minimum:** *85 mm (steps)*

Belt width (mm)	Recommended n° of sprockets*
85	1
170	2
255	3
340	4
425	5
510	6
595	7
680	8
765	9
850	10
935	11
1020	12
1105	13
1190	14
1275	15
1360	16
1445	17
1530	18

***If more sprockets are required contact application engineering.**

IMPORTANT

Add sprocket positions every 85 mm according to 85 mm width increments of the belt corresponding with 85 mm conveyor track pitch system.

Belt width (in/mm)	Recommended n° of sprockets*
3 / 76.2	1
6 / 152.4	2
9 / 228.6	3
12 / 304.5	4
15 / 381.0	5
18 / 457.2	6
21 / 533.4	7
24 / 609.6	8
27 / 685.8	9
30 / 762.0	10
33 / 838.2	11
36 / 914.4	12
39 / 990.6	13
42 / 1066.8	14
45 / 1143.0	15
48 / 1219.2	16
51 / 1295.4	17
54 / 1371.6	18

***If more sprockets are required contact application engineering.**

ENGAGEMENT ZOOM

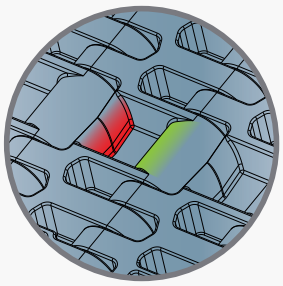

Correct contact point
Wrong contact point

IMPORTANT

● *Add sprocket positions every 76,2 mm according to 76,2 mm width increments of the belt corresponding with 76,2 mm conveyor track pitch system.*

SPROCKETS POSITION FOR:
552 FT - 552 PT - 552 GT - 552 GTsi

BOTTOM VIEW
● ***Contact point***

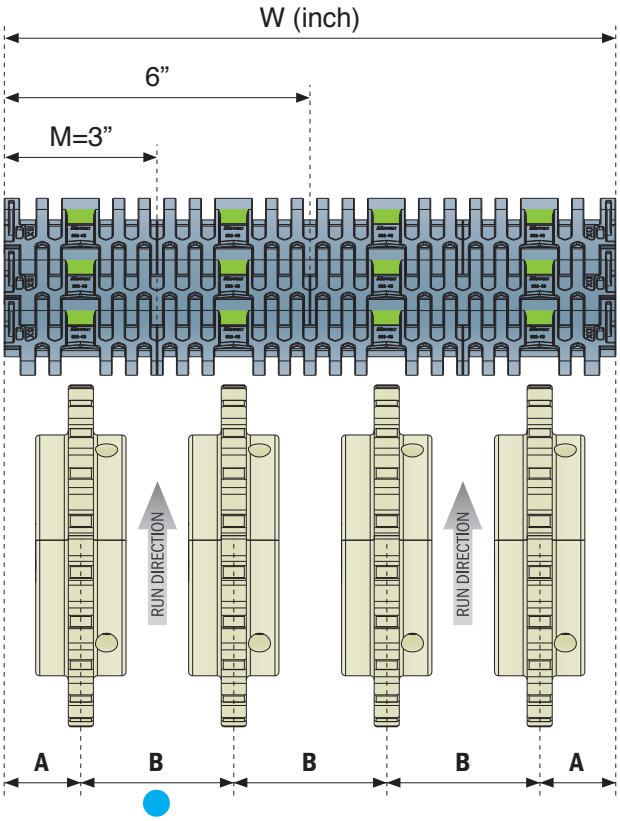

A minimum: *1,5” (38,1 mm)*	**B minimum:** *3” (76,2 mm)*

SPROCKETS POSITION FOR:
552 FT One track belt

BOTTOM VIEW
Contact point

K325
3,25" (82,55 mm

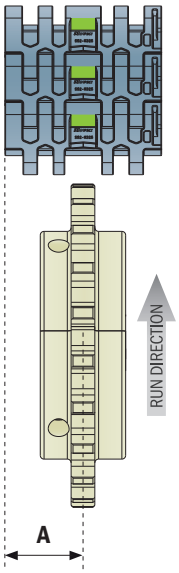

A: 1,62" (41,3 mm)

K450
4,5" (114,3 mm)

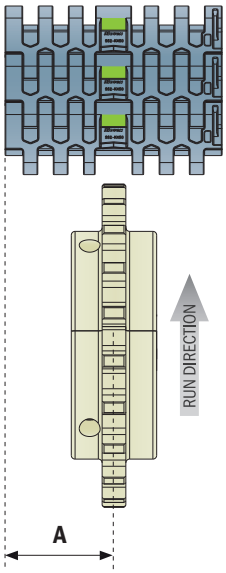

A: 2,25" (57,15 mm)

K750
7,5" (190,5 mm)

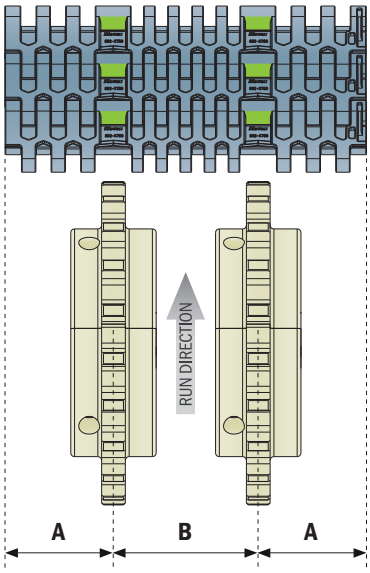

A: 2,25" (57,15 mm)
B: 3" (76,2 mm)

ENGAGEMENT ZOOM

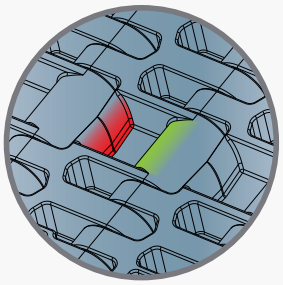

Correct contact point
Wrong contact point

SPROCKETS POSITION FOR:
552 FTT

BOTTOM VIEW
Contact point

K450
4,5" (114,3 mm)

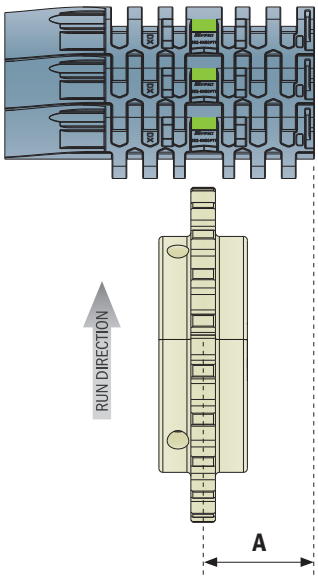

A: 2,25" (57,15 mm)

K750
7,5" (190,5 mm)

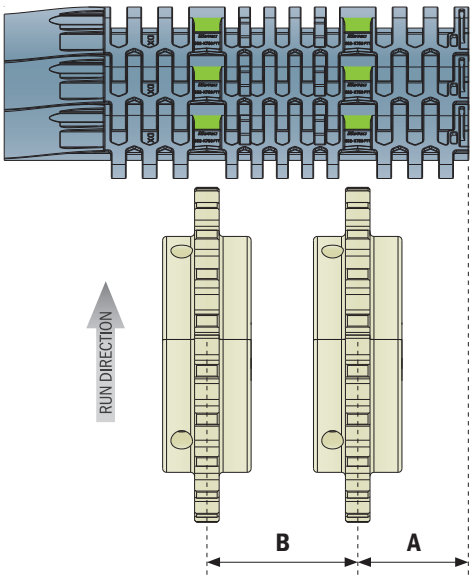

A: 2,25" (57,15 mm)
B: 3" (76,2 mm)

ENGAGEMENT ZOOM

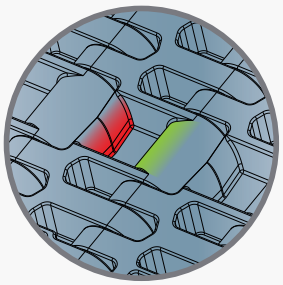

Correct contact point
Wrong contact point

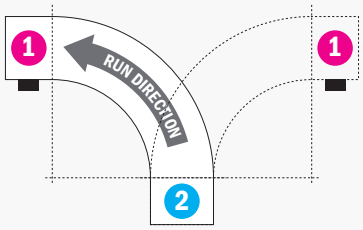

LEFT and RIGHT Version

Belt width (in/mm)	Recommended n° of sprockets*
6 / 152.4	2
9 / 228.6	3
12 / 304.5	4
15 / 381.0	5
18 / 457.2	6
21 / 533.4	7
24 / 609.6	8

***If more sprockets are required contact application engineering.**

1 Gearmotor section

Contact point

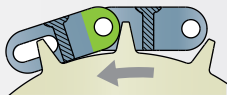

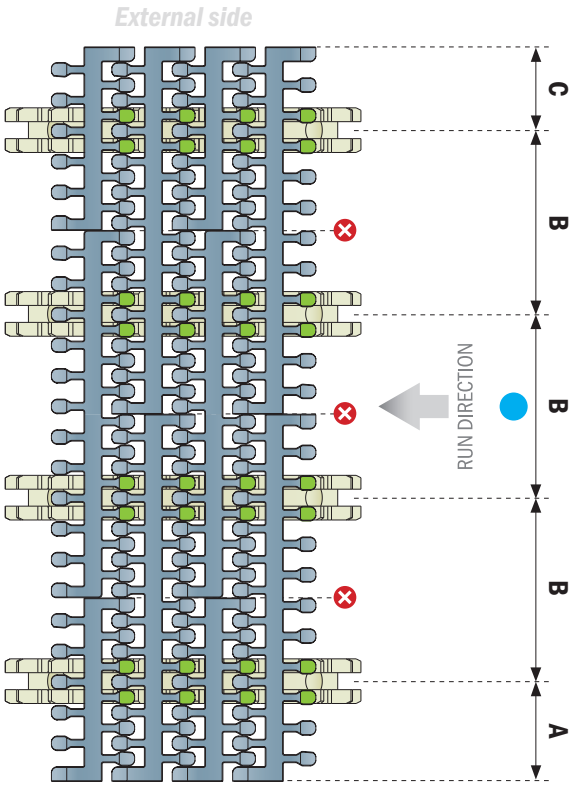

2 Return section

Contact point



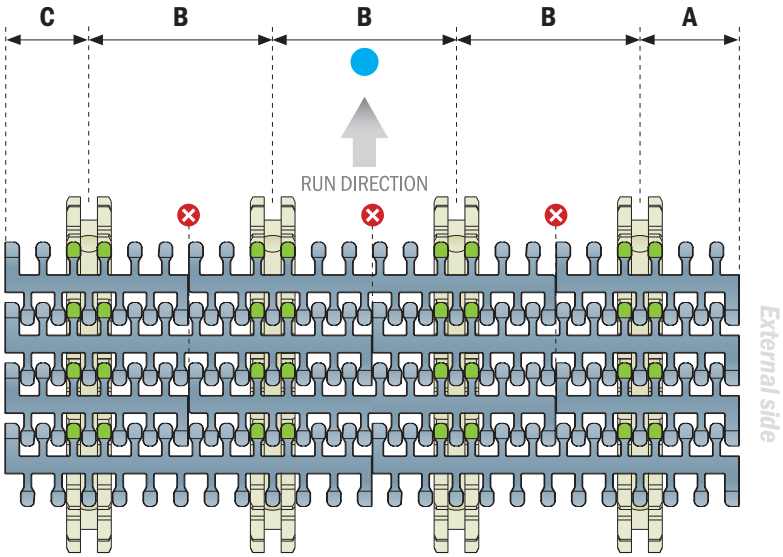

A min: *35,1 mm*	**B min:** *76,2 mm*	**C min:** *41,1 mm*

1 Gearmotor section

Contact point

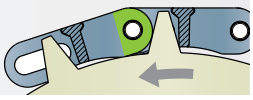

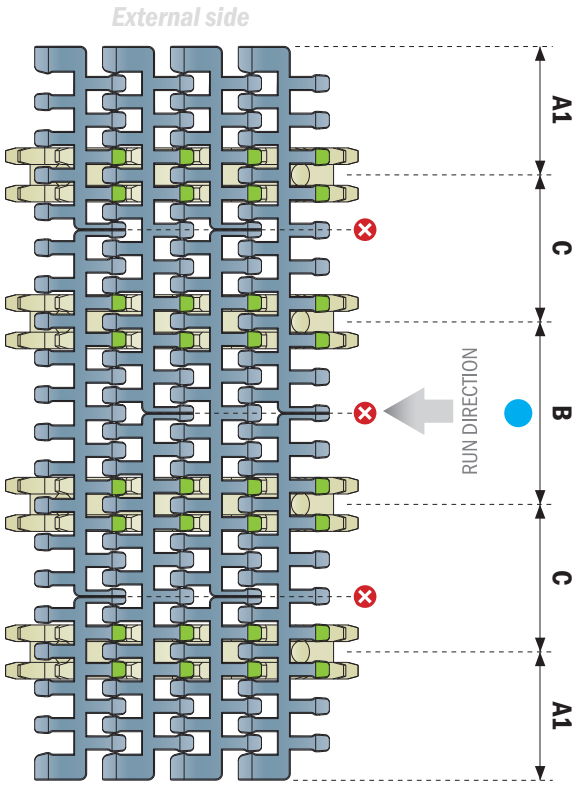

2 Return section

Contact point

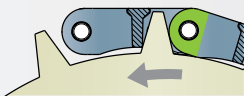

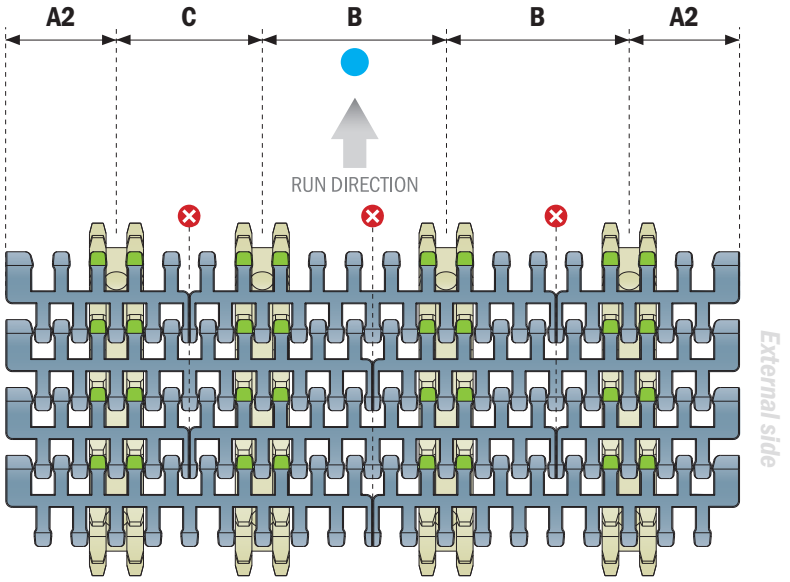

A1: 59,5 mm	A2: 51 mm	B: 85 mm	C: 68 mm

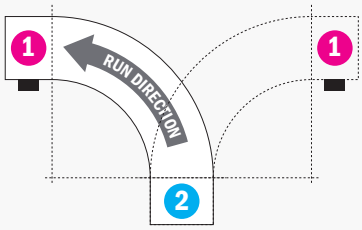

LEFT and RIGHT Version

Belt width (mm)	Recommended n° of sprockets*
255	3
340	4
425	5
510	6
595	7
680	8
765	9
850	10

*** Configuration valid for drive and idler section.**

If more sprockets are required contact application engineering.

IMPORTANT

Sprockets teeth must press against the hinge loops, never against the module's central bridge in the gap between the hinge loops.

● *Add sprocket positions every 85 mm according to 85 mm width increments of the belt corresponding with 85 mm conveyor track pitch system.*

⊗ *It's **NOT** possible to place the sprockets in this position.*

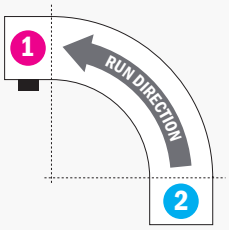

LEFT Version

Belt width (mm)	Recommended n° of sprockets*
340	4
425	5
510	6
595	7
680	8
765	9
850	10

*** Configuration valid for drive and idler section.**

If more sprockets are required contact application engineering.

1 Gearmotor section

Contact point

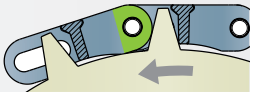

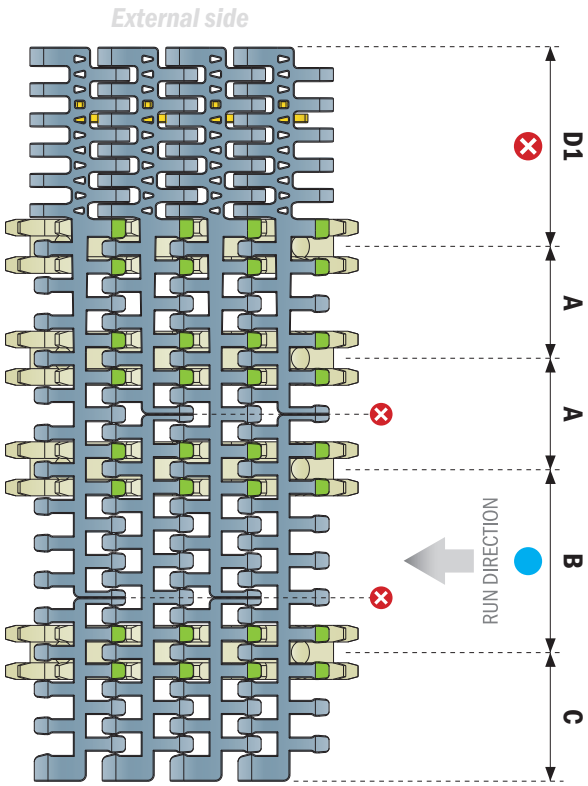

2 Return section

Contact point

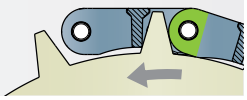

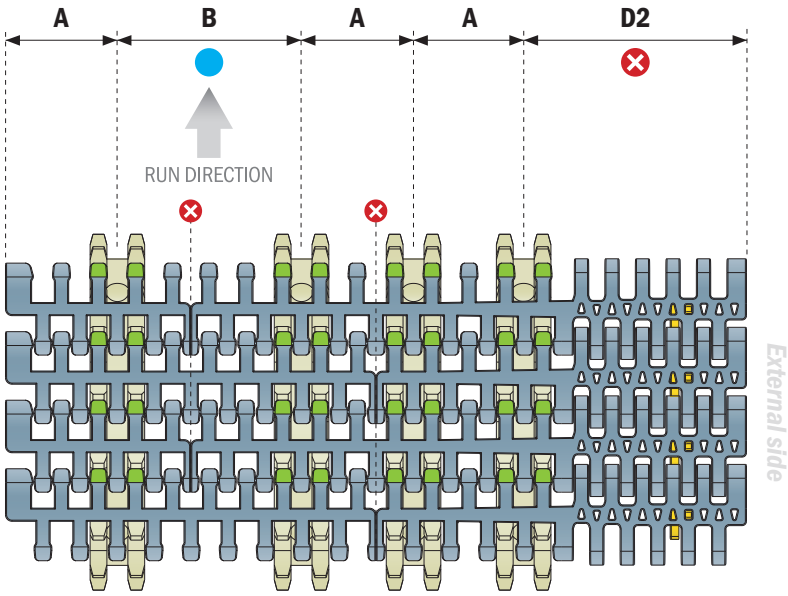

IMPORTANT

Sprockets teeth must press against the hinge loops, never against the module's central bridge in the gap between the hinge loops.

● *Add sprocket positions every 85 mm according to 85 mm width increments of the belt corresponding with 85 mm conveyor track pitch system.*

⊗ *It's **NOT** possible to place the sprockets in this position.*

A: *51 mm*	**B:** *85 mm*	**C:** *59.5 mm*
D1: *93.5 mm*	**D2:** *102 mm*	

1 Gearmotor section

Contact point

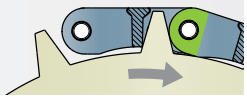

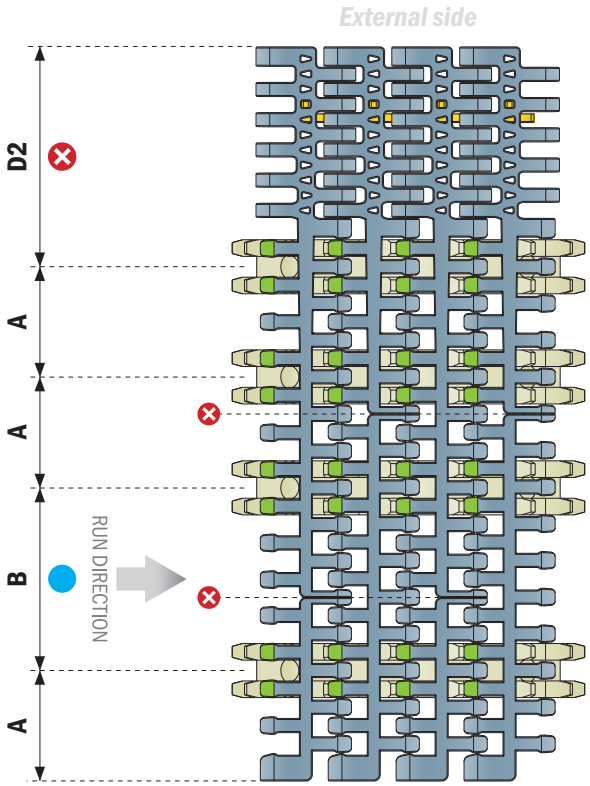

2 Return section

Contact point

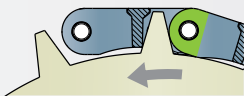

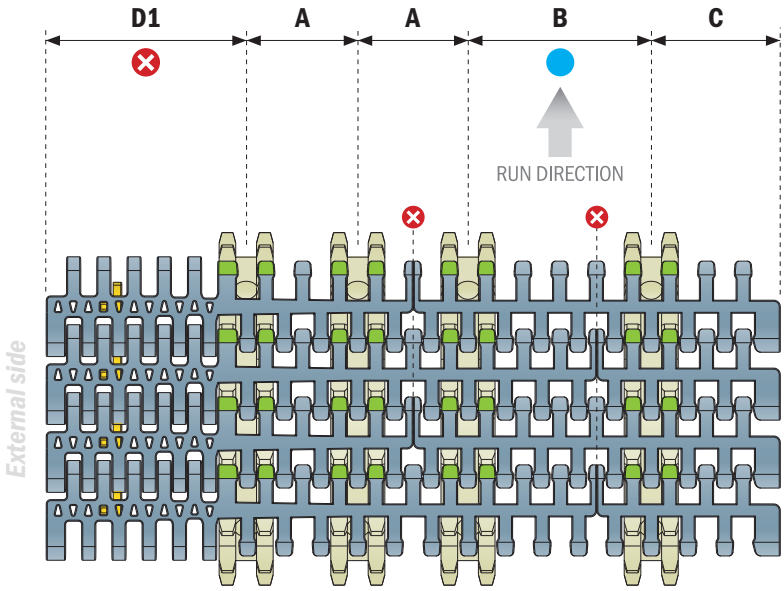

A: *51 mm*	**B:** *85 mm*	**C:** *59.5 mm*
D1: *93.5 mm*	**D2:** *102 mm*	

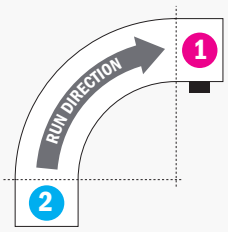

RIGHT Version

Belt width (mm)	Recommended n° of sprockets*
340	4
425	5
510	6
595	7
680	8
765	9
850	10

*** Configuration valid for drive and idler section.**

If more sprockets are required contact application engineering.

IMPORTANT

Sprockets teeth must press against the hinge loops, never against the module's central bridge in the gap between the hinge loops.

● *Add sprocket positions every 85 mm according to 85 mm width increments of the belt corresponding with 85 mm conveyor track pitch system.*

⊗ *It's **NOT** possible to place the sprockets in this position.*

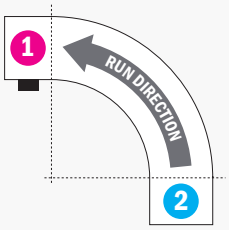

LEFT Version

Belt width (mm)	Recommended n° of sprockets*
340	5
425	6
510	7
595	8
680	9
765	10
850	11

*** Configuration valid for drive and idler section.**

If more sprockets are required contact application engineering.

1 Gearmotor section

Contact point

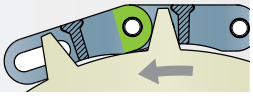

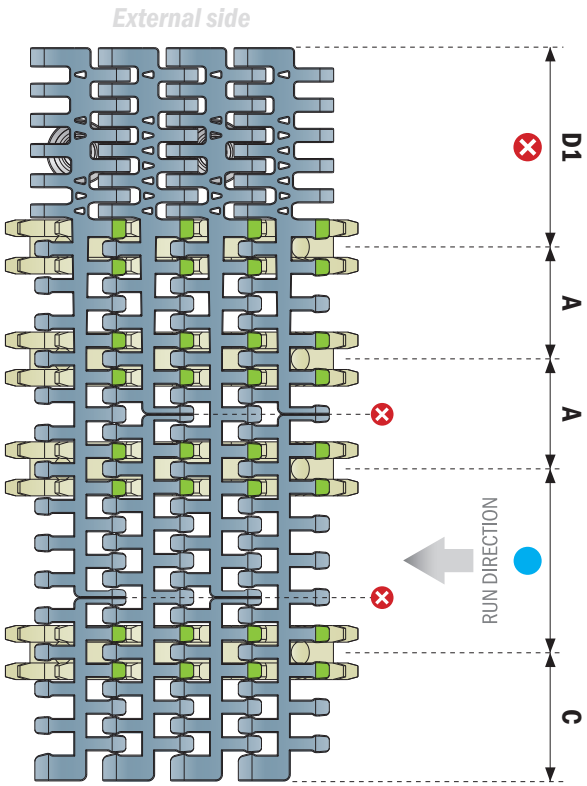

2 Return section

Contact point

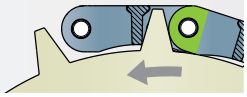

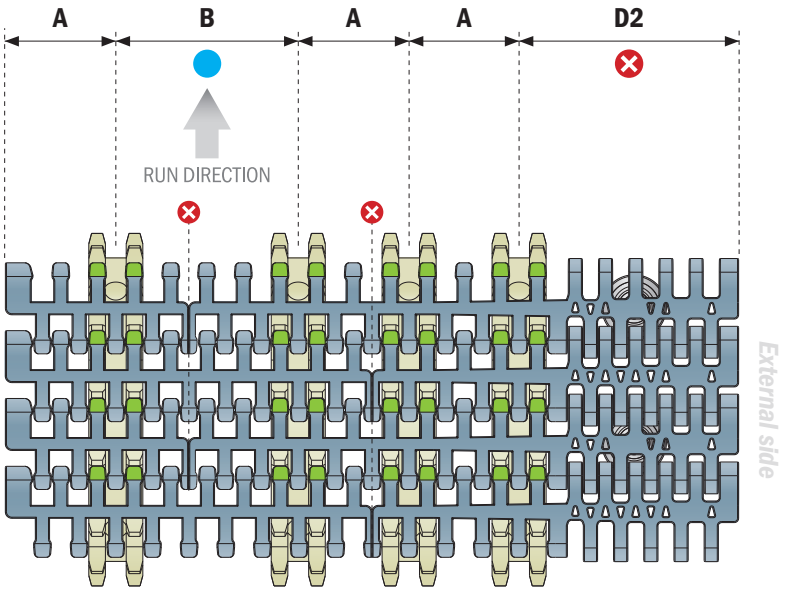

IMPORTANT

Sprockets teeth must press against the hinge loops, never against the module's central bridge in the gap between the hinge loops.

● *Add sprocket positions every 85 mm according to 85 mm width increments of the belt corresponding with 85 mm conveyor track pitch system.*

⊗ *It's **NOT** possible to place the sprockets in this position.*

A: *51 mm*	**B:** *85 mm*	**C:** *59.5 mm*
D1: *93.5 mm*	**D2:** *102 mm*	

1 Gearmotor section

Contact point

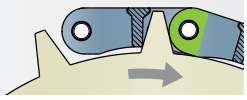

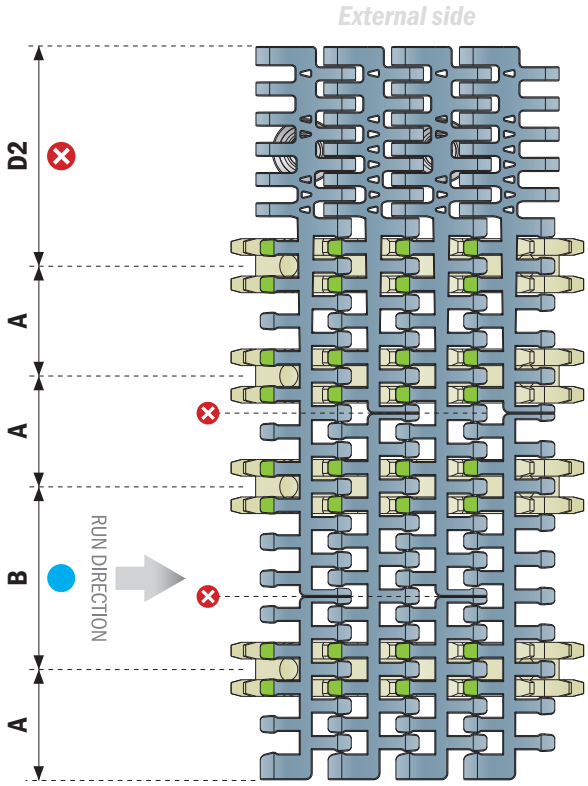

2 Return section

Contact point

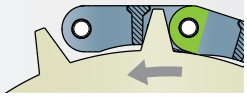

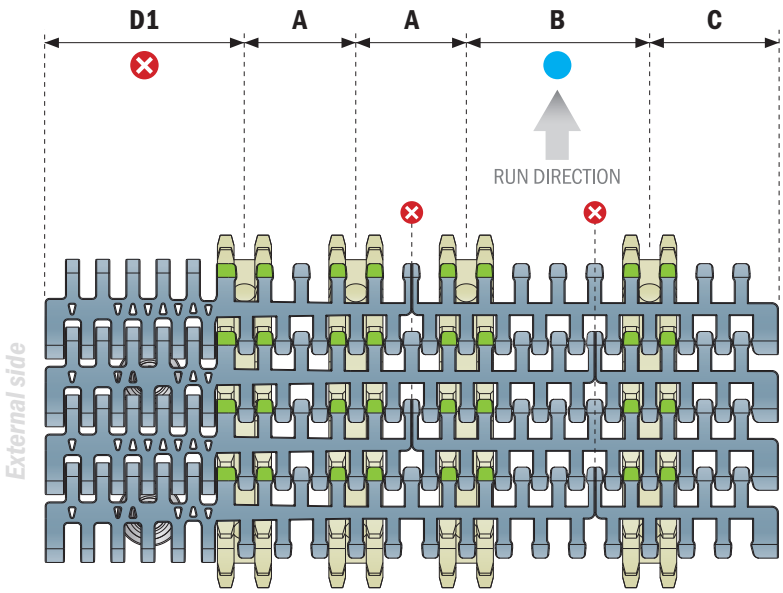

A: *51 mm*	**B:** *85 mm*	**C:** *59.5 mm*
D1: *93.5 mm*	**D2:** *102 mm*	

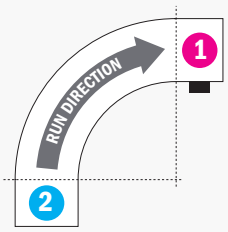

RIGHT Version

Belt width (mm)	Recommended n° of sprockets*
340	5
425	6
510	7
595	8
680	9
765	10
850	11

*** Configuration valid for drive and idler section.**

If more sprockets are required contact application engineering.

IMPORTANT

Sprockets teeth must press against the hinge loops, never against the module's central bridge in the gap between the hinge loops.

● *Add sprocket positions every 85 mm according to 85 mm width increments of the belt corresponding with 85 mm conveyor track pitch system.*

⊗ *It's **NOT** possible to place the sprockets in this position.*

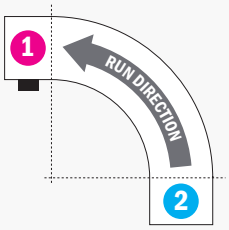

LEFT Version

Belt width (mm)	Recommended n° of sprockets*
340	5
425	6
510	7
595	8
680	9
765	10
850	11

*** Configuration valid for drive and idler section.**

If more sprockets are required contact application engineering.

IMPORTANT

Sprockets teeth must press against the hinge loops, never against the module's central bridge in the gap between the hinge loops.

● *Add sprocket positions every 85 mm according to 85 mm width increments of the belt corresponding with 85 mm conveyor track pitch system.*

⊗ *It's **NOT** possible to place the sprockets in this position.*

Small radius section support options:



Support sprocket
info and order code
Pag 504



Split roller
info and order code
Pag 504

1 Gearmotor section

Contact point

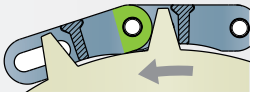

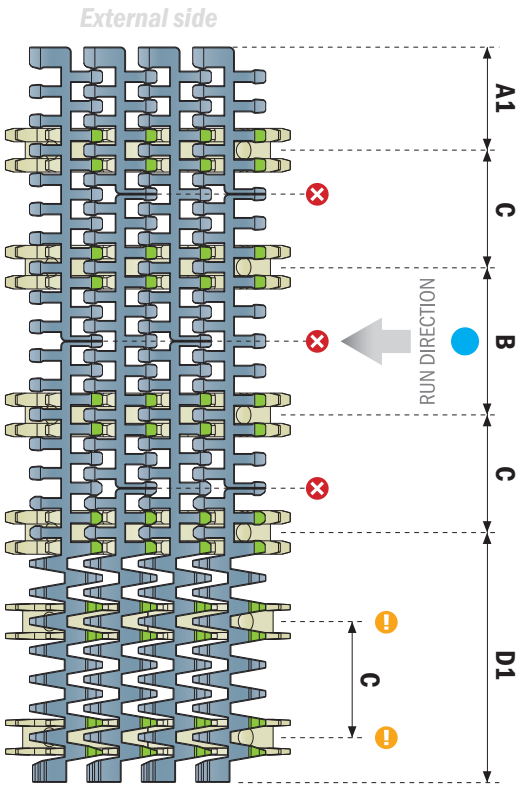

2 Return section

Contact point

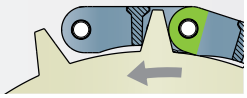

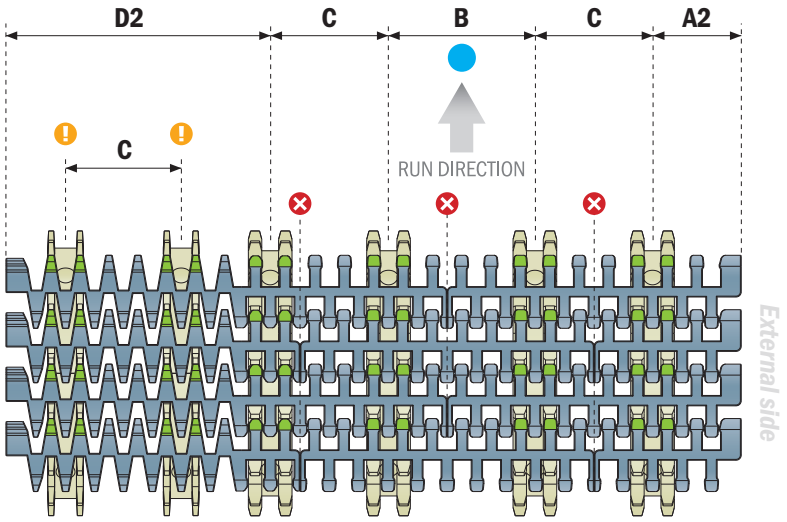

A1: *59.5 mm*	**A2:** *51 mm*	**B:** *85 mm*
C: *68 mm*	**D1:** *144.5 mm*	**D2:** *153 mm*

1 Gearmotor section

Contact point

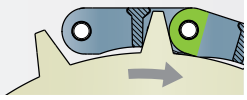

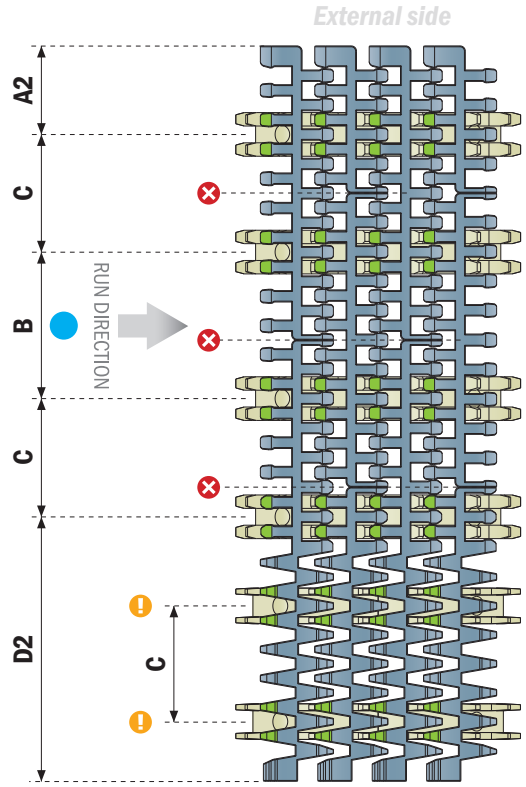

2 Return section

Contact point

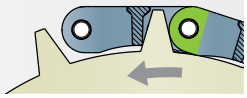

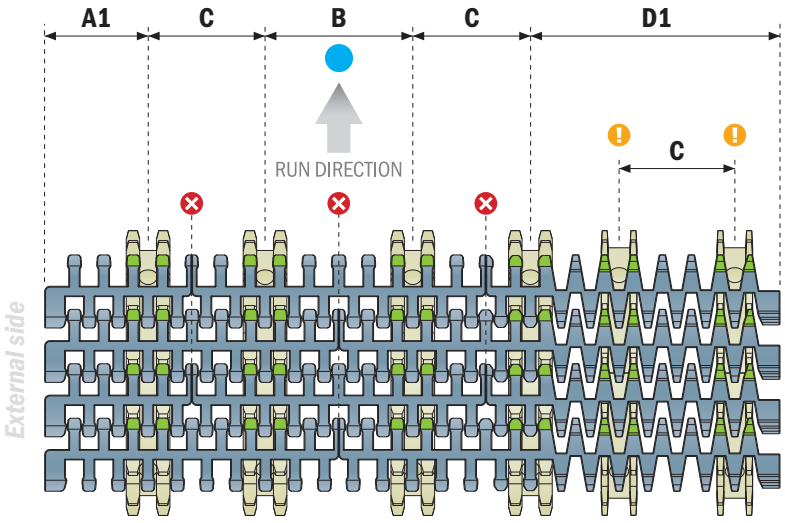

A1: 59.5 mm	**A2:** 51 mm	**B:** 85 mm
C: 68 mm	**D1:** 144.5 mm	**D2:** 153 mm

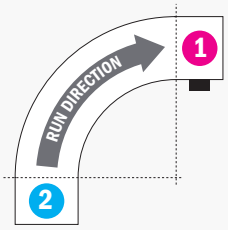

RIGHT Version

Belt width (mm)	Recommended n° of sprockets*
340	5
425	6
510	7
595	8
680	9
765	10
850	11

*** Configuration valid for drive and idler section.**

If more sprockets are required contact application engineering.

IMPORTANT

Sprockets teeth must press against the hinge loops, never against the module's central bridge in the gap between the hinge loops.

Add sprocket positions every 85 mm according to 85 mm width increments of the belt corresponding with 85 mm conveyor track pitch system.

*It's **NOT** possible to place the sprockets in this position.*

Small radius section support options:



Support sprocket
info and order code
Pag 504



Split roller
info and order code
Pag 504

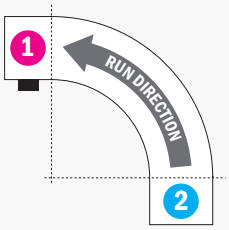

LEFT Version

Belt width (mm)	Recommended n° of sprockets*
340	5
425	6
510	7
595	8
680	9
765	10
850	11

*** Configuration valid for drive and idler section.**

If more sprockets are required contact application engineering.

IMPORTANT

Sprockets teeth must press against the hinge loops, never against the module's central bridge in the gap between the hinge loops.

● *Add sprocket positions every 85 mm according to 85 mm width increments of the belt corresponding with 85 mm conveyor track pitch system.*

⊗ *It's **NOT** possible to place the sprockets in this position.*

Small radius section support options:



Support sprocket
info and order code
Pag 504



Split roller
info and order code
Pag 504

1 Gearmotor section

Contact point

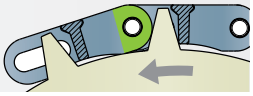

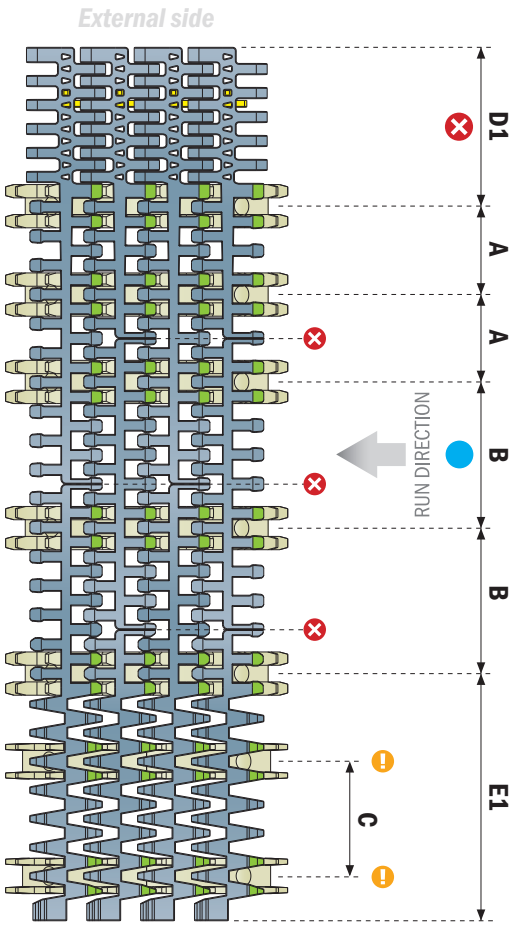

2 Return section

Contact point

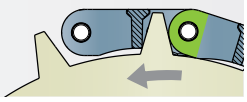

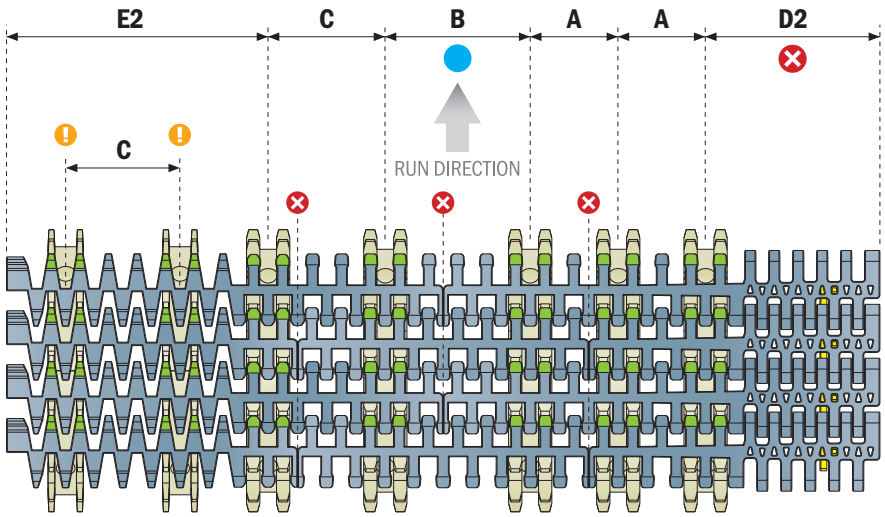

A: *51 mm*	**B:** *85 mm*	**C:** *68 mm*	
D1: *93,5 mm*	**D2:** *102 mm*	**E1:** *144,5 mm*	**E2:** *153 mm*

1 Gearmotor section

Contact point

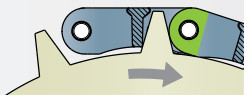

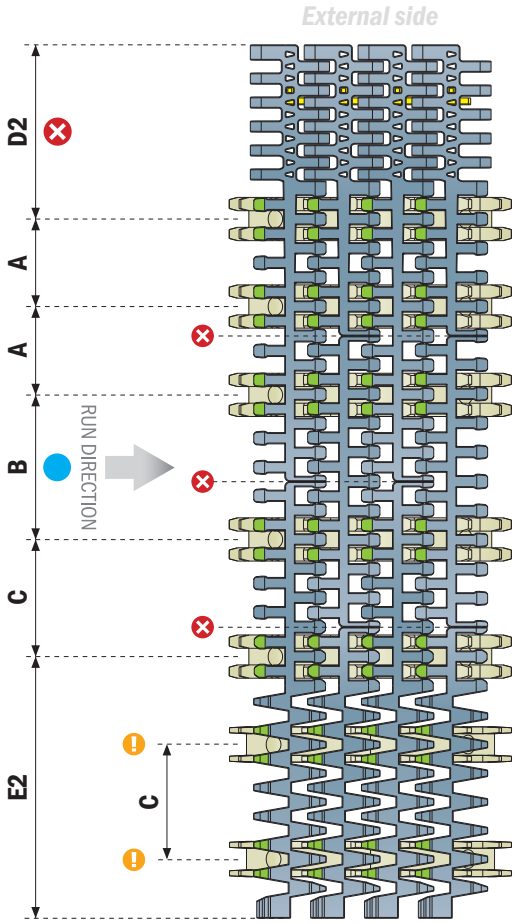

2 Return section

Contact point

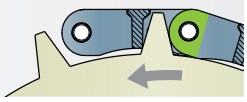

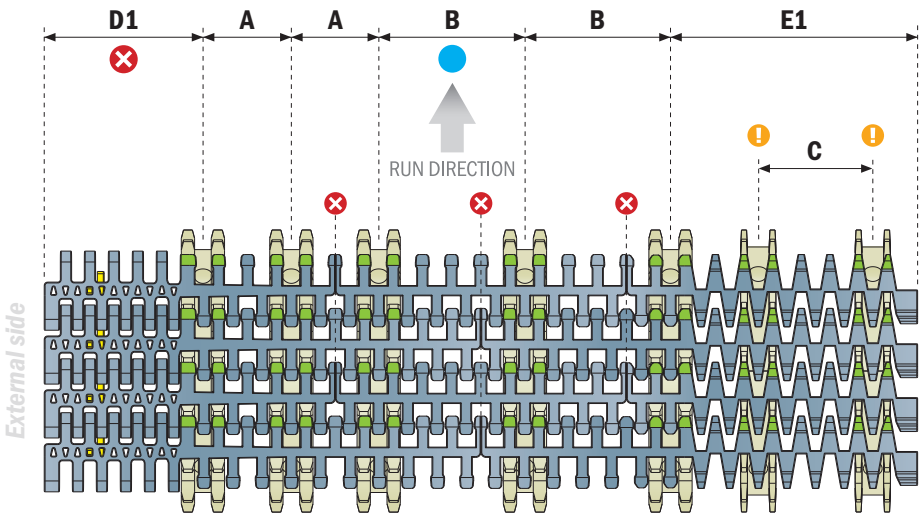

A: 51 mm	**B:** 85 mm	**C:** 68 mm	
D1: 93,5 mm	**D2:** 102 mm	**E1:** 144,5 mm	**E2:** 153 mm

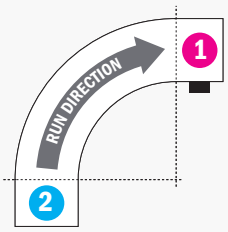

RIGHT Version

Belt width (mm)	Recommended n° of sprockets*
340	5
425	6
510	7
595	8
680	9
765	10
850	11

*** Configuration valid for drive and idler section.**

If more sprockets are required contact application engineering.

IMPORTANT

Sprockets teeth must press against the hinge loops, never against the module's central bridge in the gap between the hinge loops.

Add sprocket positions every 85 mm according to 85 mm width increments of the belt corresponding with 85 mm conveyor track pitch system.

*It's **NOT** possible to place the sprockets in this position.*

Small radius section support options:



Support sprocket
info and order code
Pag 504



Split roller
info and order code
Pag 504

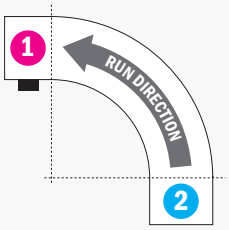

LEFT Version

Belt width (mm)	Recommended n° of sprockets*
340	5
425	6
510	7
595	8
680	9
765	10
850	11

*** Configuration valid for drive and idler section.**

If more sprockets are required contact application engineering.

IMPORTANT

Sprockets teeth must press against the hinge loops, never against the module's central bridge in the gap between the hinge loops.

● *Add sprocket positions every 85 mm according to 85 mm width increments of the belt corresponding with 85 mm conveyor track pitch system.*

⊗ *It's **NOT** possible to place the sprockets in this position.*



Support sprocket
info and order code
Pag 504



Split roller
info and order code
Pag 504

1 Gearmotor section

Contact point

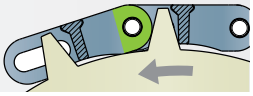

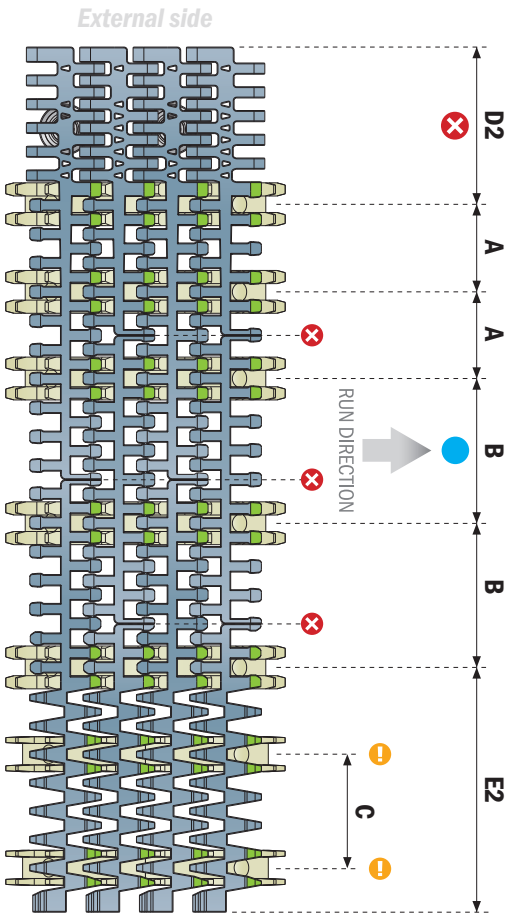

2 Return section

Contact point

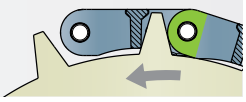

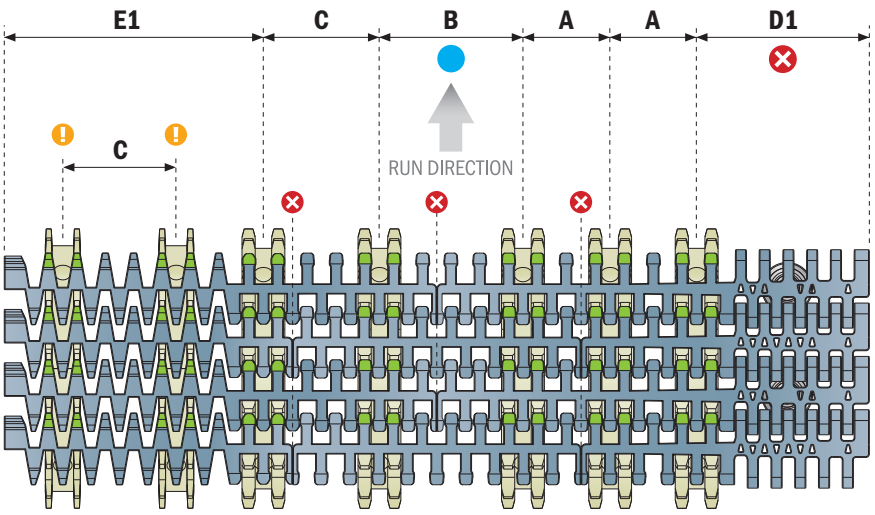

A: *51 mm*	**B:** *85 mm*	**C:** *68 mm*	
D1: *102 mm*	**D2:** *93.5 mm*	**E1:** *153 mm*	**E2:** *144.5 mm*

1 Gearmotor section

Contact point

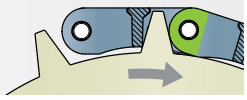

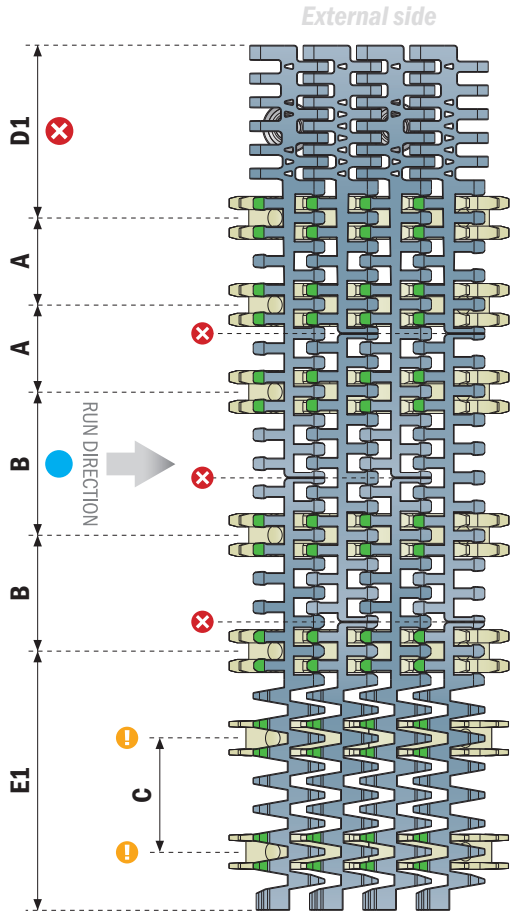

2 Return section

Contact point

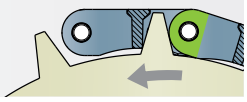

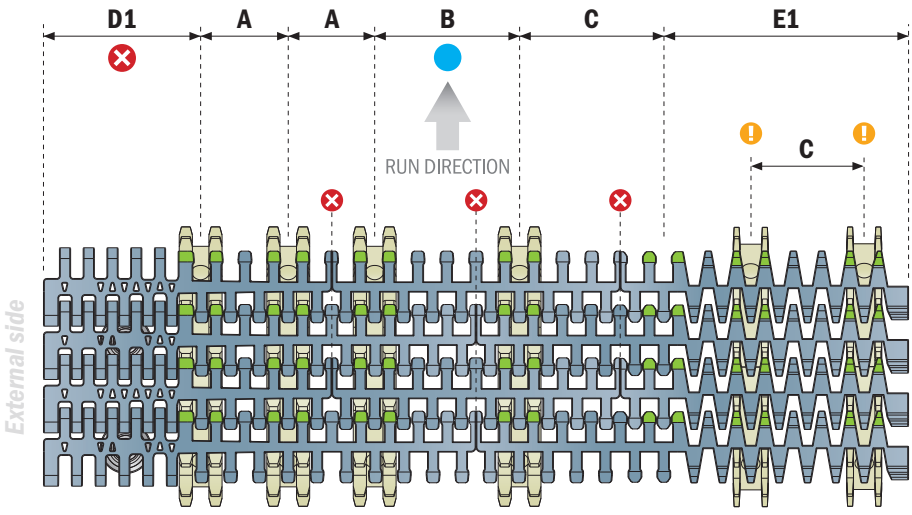

A: *51 mm*	**B:** *85 mm*	**C:** *68 mm*	
D1: *102 mm*	**D2:** *93.5 mm*	**E1:** *153 mm*	**E2:** *144.5 mm*

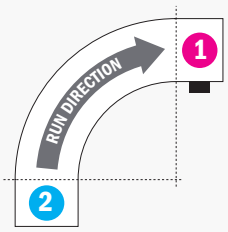

RIGHT Version

Belt width (mm)	Recommended n° of sprockets*
340	5
425	6
510	7
595	8
680	9
765	10
850	11

*** Configuration valid for drive and idler section.**

If more sprockets are required contact application engineering.

IMPORTANT

Sprockets teeth must press against the hinge loops, never against the module's central bridge in the gap between the hinge loops.

Add sprocket positions every 85 mm according to 85 mm width increments of the belt corresponding with 85 mm conveyor track pitch system.

*It's **NOT** possible to place the sprockets in this position.*

Small radius section support options:



Support sprocket
info and order code
Pag 504



Split roller
info and order code
Pag 504

Materiale / *Material / Materialien:*
Poliammide/*Polyamide/Polyamid*
Viti: Acciaio inox/*Screws: Stainless steel/Schrauben: Edelstahl*
Dadi: ferro zincato/*Nuts: zinc plated steel/Mutter: verzinkter stahl*

Support sprocket

Small radius section support options:

Ruota traino divisa, fresata
Split drive sprocket, machined / geteiltes Antriebskettenrad gefräst



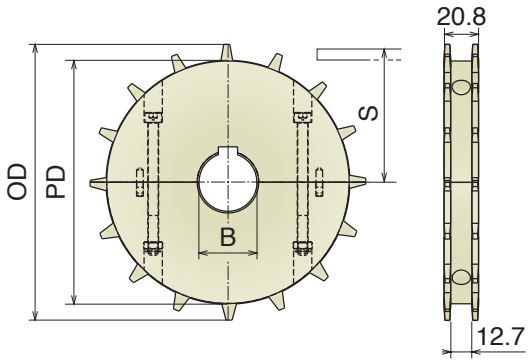

Article-Nr.	Z-	Bore	PD	OD	S
157101SR	10	25	102,8	107,7	45,0
157102SR		30			
157103SR		35			
157104SR		40			
157201SR	13	25	132,7	138,8	60,0
157202SR		30			
157203SR		35			
157204SR		40			
157301SR	15	25	152,7	159,4	70,0
157302SR		30			
157303SR		35			
157304SR		40			
157401SR	16	25	162,8	169,6	75,0
157402SR		30			
157403SR		35			
157404SR		40			

Ruota rinvio divisa, fresata
Split idler sprocket, machined / geteiltes Umlenkrad, gefräst



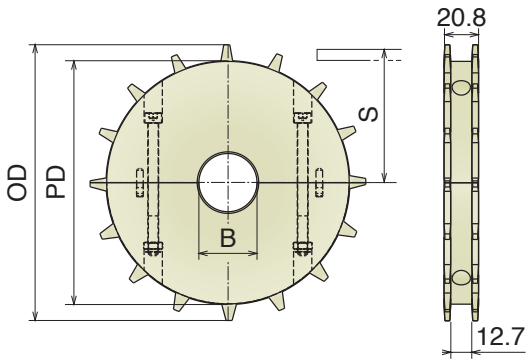

Article-Nr.	Z-	Bore	PD	OD	S
157150SR	10	18*	102,8	107,7	45,0
157151SR		25			
157152SR		30			
157153SR		35			
157154SR		40			
157250SR	13	18*	132,7	138,8	60,0
157251SR		25			
157252SR		30			
157253SR		35			
157254SR		40			
157350SR	15	18*	152,7	159,4	70,0
157351SR		25			
157352SR		30			
157353SR		35			
157354SR		40			
157450SR	16	18*	162,8	169,6	75,0
157451SR		25			
157452SR		30			
157453SR		35			
157454SR		40			

*Plain Bore

Split support roller

Small radius section support options:



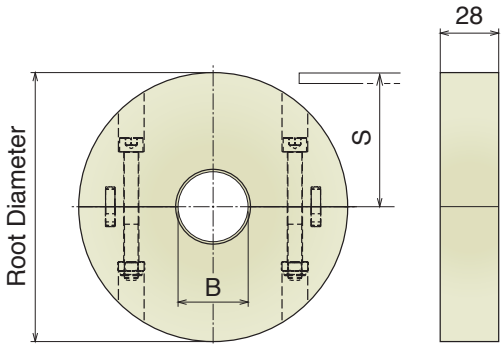

Art-Nr.	Z- eq.	Bore	Root Ø	S
157150R	10	18*	85,1	45,0
157151R		25		
157152R		30		
157153R		35		
157154R		40		
157250R	13	18*	115,0	60,0
157251R		25		
157252R		30		
157253R		35		
157254R		40		
157350R	15	18*	134,3	70,0
157351R		25		
157352R		30		
157353R		35		
157354R		40		
157450R	16	18*	146,8	75,0
157451R		25		
157452R		30		
157453R		35		
157454R		40		

*Plain Bore

TECHNICAL RECOMMENDATION:



Fix support roller with split collars ***Part 215***

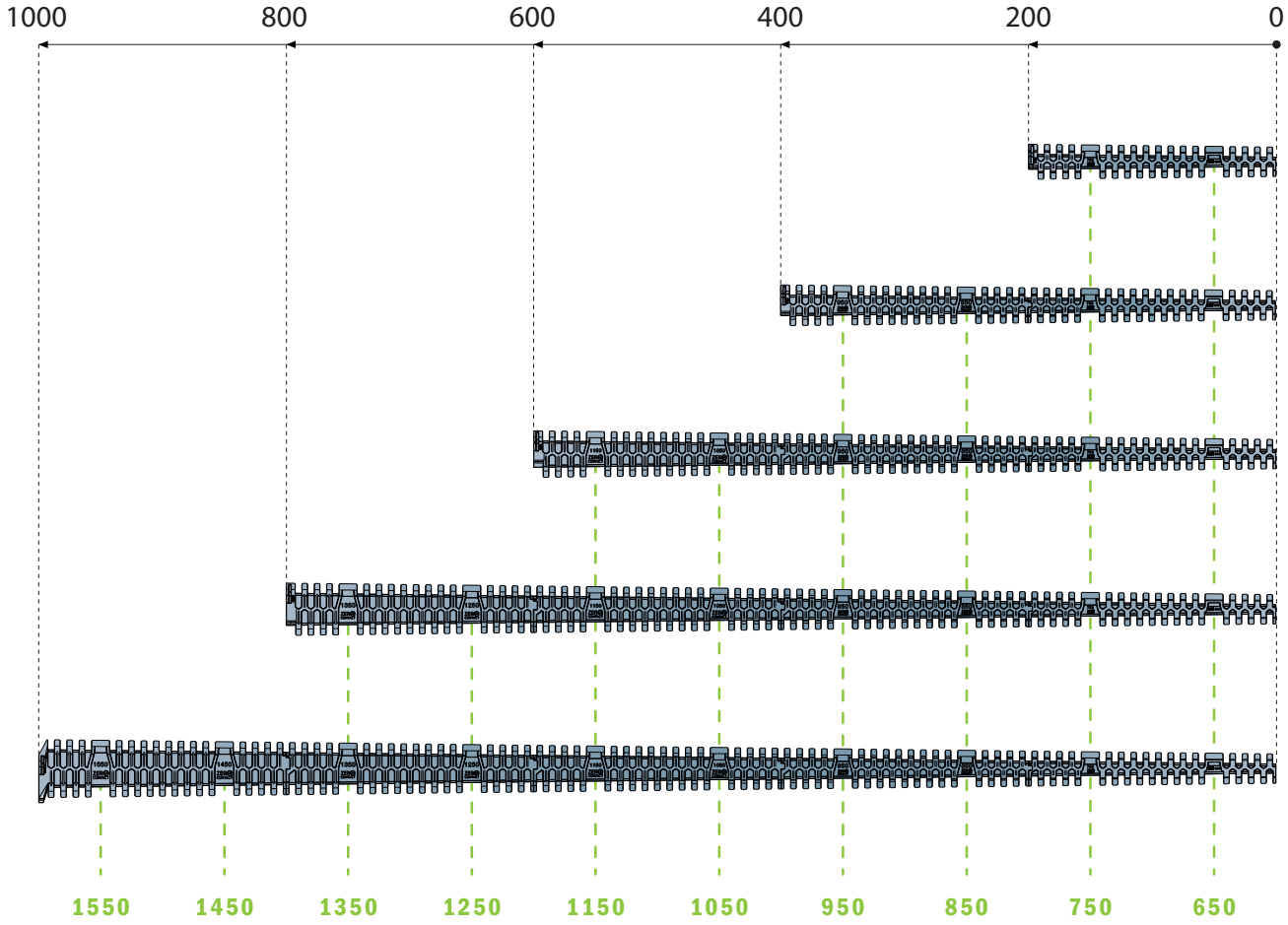

Dedicated Sprockets

Ruota traino, fresata / *Drive sprocket, machined* / *Antriebskettenrad gefräst*



R	Part	Article-Nr.	Z-	Bore	Pitch Diam.	Ext. Diam.	S
650	1624	162401	12	40	58,0	61,0	25,6
750	1624	162402			66,0	69,0	29,9
850	1624	162403			76,0	79,0	34,2
950	1624	162404			84,0	86,0	38,5
1050	1624	162405			94,0	97,0	42,8
1150	1624	162406			102,0	104,0	47,1
1250	1624	162407			112,0	114,0	51,4
1350	1624	162408			119,0	122,0	55,7
1450	1624	162409			130,0	132,0	60,0
1550	1624	162410			137,0	140,0	64,3

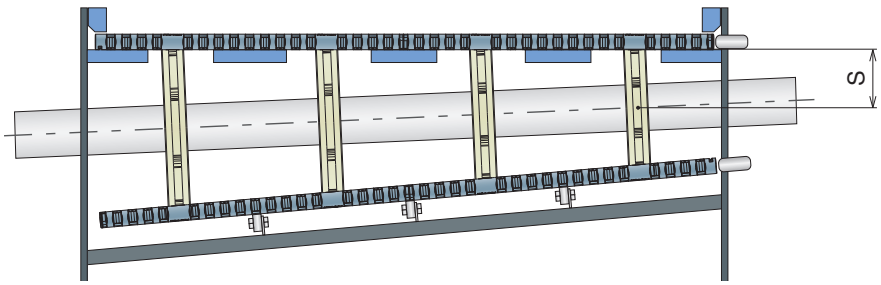

Radius match with the molded number underneath the belt.

Width 524

R586

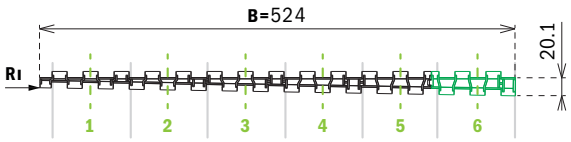

Serial Number	Order code	Track	B Belt width (Tolerance+/-3mm)	RI Belt radius (Rkurv-14mm)	Number of modules for assembled belt	Weight in Kg (unit)
1	**5461280524A-M**	1	**524**	586	200	9

Width 864

R586

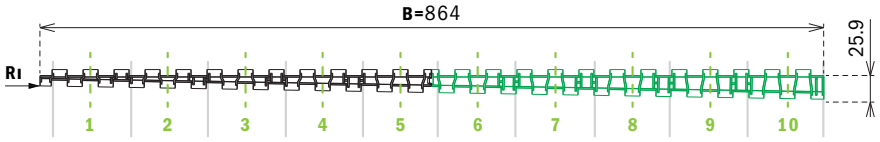

Serial Number	Order code	Track	B Belt width (Tolerance+/-3mm)	RI Belt radius (Rkurv-14mm)	Number of modules for assembled belt	Weight in Kg (unit)
2	**5461280864A-M**	1	**864**	586	200	16

Width 1034

R586

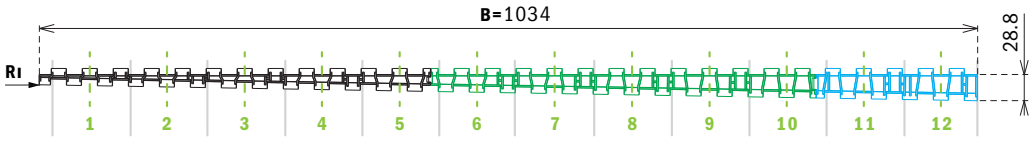

Serial Number	Order code	Track	B Belt width (Tolerance+/-3mm)	RI Belt radius (Rkurv-14mm)	Number of modules for assembled belt	Weight in Kg (unit)
3	**5461281034A-M**	1	**1034**	586	200	18

Width 524

R756

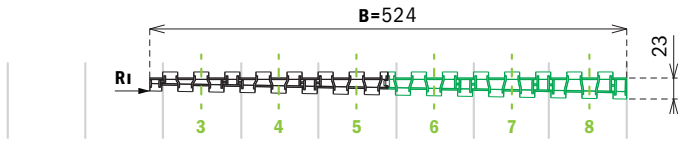

Serial Number	Order code	Track	B Belt width (Tolerance+/-3mm)	RI Belt radius (Rkurv-14mm)	Number of modules for assembled belt	Weight in Kg (unit)
4	5462280524A-M	1	524	756	200	10

Width 864

R756

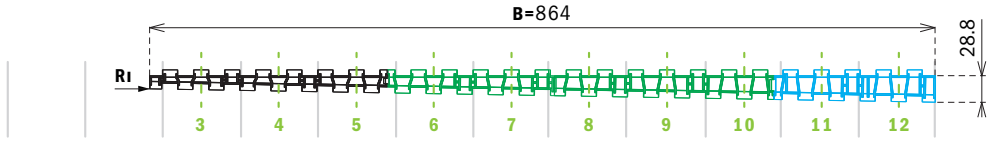

Serial Number	Order code	Track	B Belt width (Tolerance+/-3mm)	RI Belt radius (Rkurv-14mm)	Number of modules for assembled belt	Weight in Kg (unit)
5	5462280864A-M	1	864	756	200	18

Width 1034

R756

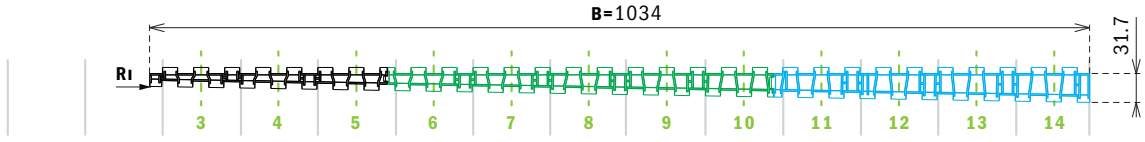

Serial Number	Order code	Track	B Belt width (Tolerance+/-3mm)	RI Belt radius (Rkurv-14mm)	Number of modules for assembled belt	Weight in Kg (unit)
6	5462281034A-M	1	1034	756	200	22

Width 524

R1011

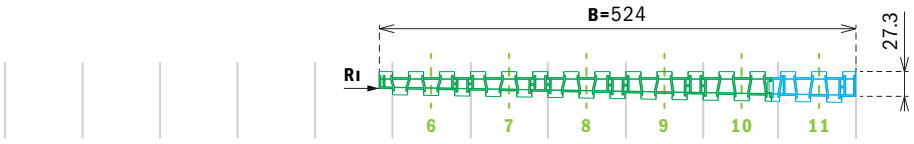

Serial Number	Order code	Track	B Belt width (Tolerance+/-3mm)	RI Belt radius (Rkurv-14mm)	Number of modules for assembled belt	Weight in Kg (unit)
7	**5463280524A-M**	**1**	**524**	1011	200	11

Width 864

R1011

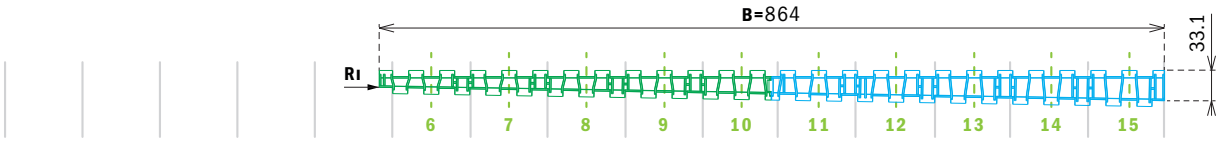

Serial Number	Order code	Track	B Belt width (Tolerance+/-3mm)	RI Belt radius (Rkurv-14mm)	Number of modules for assembled belt	Weight in Kg (unit)
8	**5463280864A-M**	**1**	**864**	1011	200	20

Width 1034

R1011

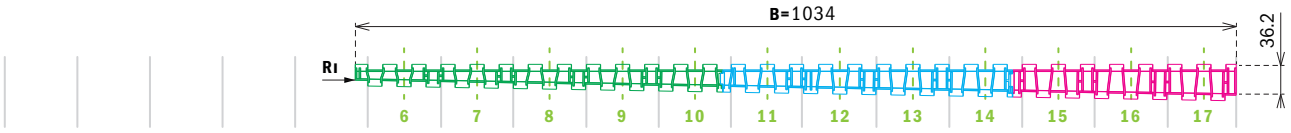

Serial Number	Order code	Track	B Belt width (Tolerance+/-3mm)	RI Belt radius (Rkurv-14mm)	Number of modules for assembled belt	Weight in Kg (unit)
9	**5463281034A-M**	**1**	**1034**	1011	200	24

Width 864 (439/419)

R586

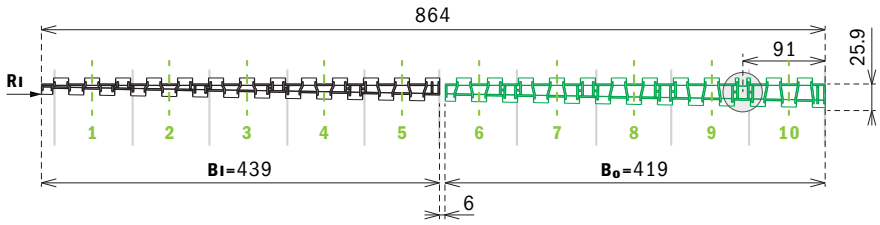

inner belt - without bearing - on bottom side

Serial Number	Order code	Track	BI Belt width (Tolerance+/-3mm)	RI Belt radius (Rkurv-14mm)	Number of modules for assembled belt	Weight in Kg (unit)
10	5461280439A-M	1	439	586	200	8

outer belt - with bearing - on bottom side

Serial Number	Order code	Track	Bo Belt width (Tolerance+/-3mm)	Ro Belt radius (=RI+BI+6mm)	Number of modules for assembled belt	Weight in Kg (unit)
15	5461280419A-M	1	419	1031	200	9

Width 1034 (524/504)

R586

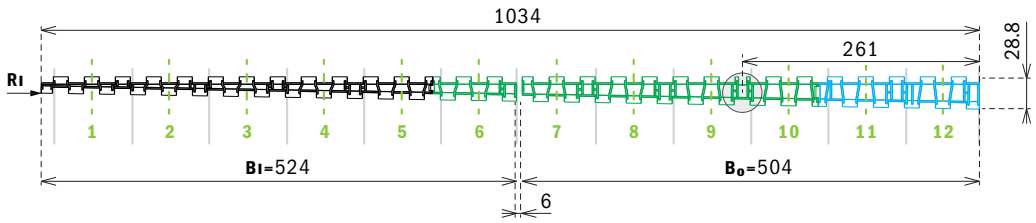

inner belt - without bearing - on bottom side

Serial Number	Order code	Track	BI Belt width (Tolerance+/-3mm)	RI Belt radius (Rkurv-14mm)	Number of modules for assembled belt	Weight in Kg (unit)
1	5461280524A-M	1	524	586	200	9

outer belt - with bearing - on bottom side

Serial Number	Order code	Track	Bo Belt width (Tolerance+/-3mm)	Ro Belt radius (=RI+BI+6mm)	Number of modules for assembled belt	Weight in Kg (unit)
16	5461280504A-M	1	504	1116	200	10

Width 524 (269/249)

R756

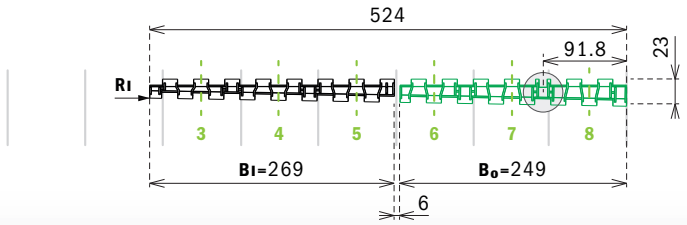

inner belt - without bearing - on bottom side

Serial Number	Order code	Track	BI Belt width (Tolerance+/-3mm)	RI Belt radius (Rkurv-14mm)	Number of modules for assembled belt	Weight in Kg (unit)
11	5462280269A-M	1	269	756	200	5

outer belt - with bearing - on bottom side

Serial Number	Order code	Track	Bo Belt width (Tolerance+/-3mm)	Ro Belt radius (=RI+BI+6mm)	Number of modules for assembled belt	Weight in Kg (unit)
17	5462280249A-M	1	249	1031	200	6

Width 864 (439/419)

R756

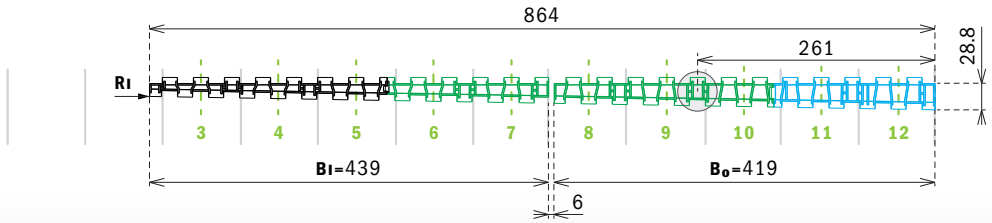

inner belt - without bearing - on bottom side

Serial Number	Order code	Track	BI Belt width (Tolerance+/-3mm)	RI Belt radius (Rkurv-14mm)	Number of modules for assembled belt	Weight in Kg (unit)
12	5462280439A-M	1	439	756	200	9

outer belt - with bearing - on bottom side

Serial Number	Order code	Track	Bo Belt width (Tolerance+/-3mm)	Ro Belt radius (=RI+BI+6mm)	Number of modules for assembled belt	Weight in Kg (unit)
18	5462280419A-M	1	419	1201	200	10

Width 1034 (524/504)

R756

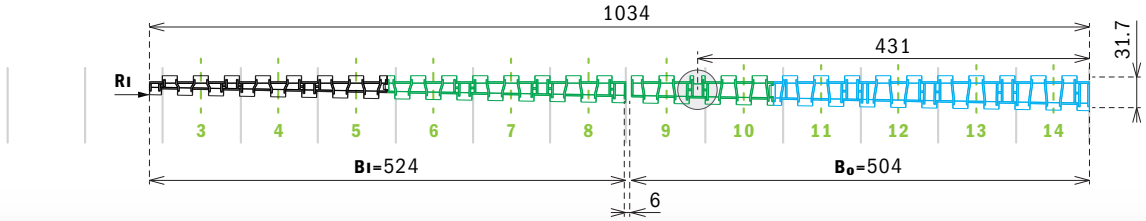

inner belt - without bearing - on bottom side

Serial Number	Order code	Track	BI Belt width (Tolerance+/-3mm)	RI Belt radius (Rkurv-14mm)	Number of modules for assembled belt	Weight in Kg (unit)
4	5462280524A-M	1	524	756	200	10

outer belt - with bearing - on bottom side

Serial Number	Order code	Track	Bo Belt width (Tolerance+/-3mm)	Ro Belt radius (=RI+BI+6mm)	Number of modules for assembled belt	Weight in Kg (unit)
19	5462280504A-M	1	504	1286	200	11

Width 524 (269/249)

R1011

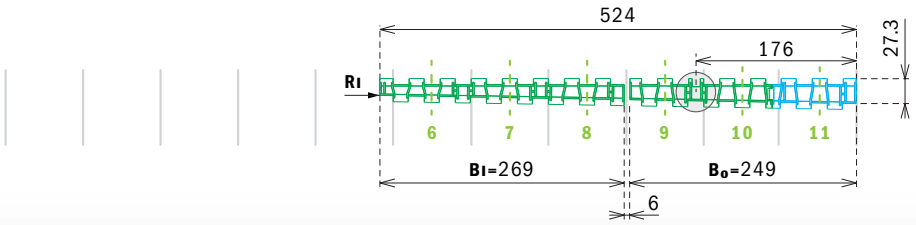

inner belt - without bearing - on bottom side

Serial Number	Order code	Track	BI Belt width (Tolerance+/-3mm)	RI Belt radius (Rkurv-14mm)	Number of modules for assembled belt	Weight in Kg (unit)
13	**5463280269A-M**	**1**	**269**	1011	200	6

outer belt - with bearing - on bottom side

Serial Number	Order code	Track	Bo Belt width (Tolerance+/-3mm)	Ro Belt radius (=RI+BI+6mm)	Number of modules for assembled belt	Weight in Kg (unit)
20	**5463280249A-M**	**1**	**249**	1286	200	7

Width 864 (439/419)

R1011

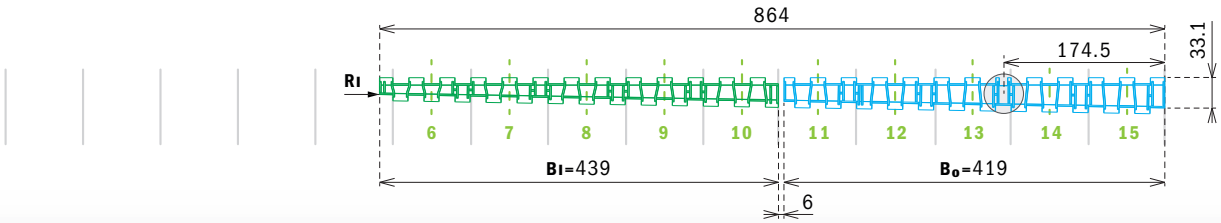

inner belt - without bearing - on bottom side

Serial Number	Order code	Track	BI Belt width (Tolerance+/-3mm)	RI Belt radius (Rkurv-14mm)	Number of modules for assembled belt	Weight in Kg (unit)
14	**5463280439A-M**	**1**	**439**	1011	200	10

outer belt - with bearing - on bottom side

Serial Number	Order code	Track	Bo Belt width (Tolerance+/-3mm)	Ro Belt radius (=RI+BI+6mm)	Number of modules for assembled belt	Weight in Kg (unit)
21	**5463280419A-M**	**1**	**419**	1456	200	11

Width 1034 (524/504)

R1011

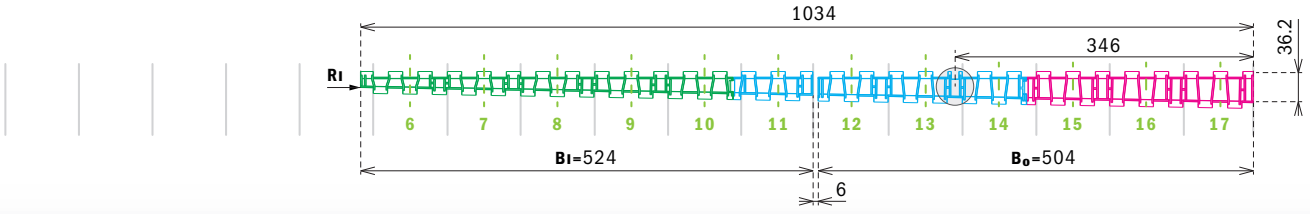

inner belt - without bearing - on bottom side

Serial Number	Order code	Track	BI Belt width (Tolerance+/-3mm)	RI Belt radius (Rkurv-14mm)	Number of modules for assembled belt	Weight in Kg (unit)
7	**5463280524A-M**	**1**	**524**	1011	200	11

outer belt - with bearing - on bottom side

Serial Number	Order code	Track	Bo Belt width (Tolerance+/-3mm)	Ro Belt radius (=RI+BI+6mm)	Number of modules for assembled belt	Weight in Kg (unit)
22	**5463280504A-M**	**1**	**504**	1541	200	12

Dedicated Sprockets

Ruota traino, fresata / ***Drive sprocket, machined / Antriebskettenrad gefräst***



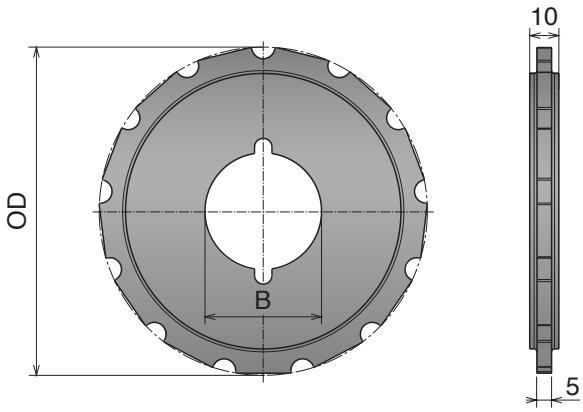

Reference n°	Part	Article-Nr.	Z-	Bore	Ext. Diam.
1	1633	163301	13	30	45,9
2	1633	163302		40	52,0
3	1633	163303			58,0
4	1633	163304			64,1
5	1633	163305			70,2
6	1633	163306			76,2
7	1633	163307			82,3
8	1633	163308			88,3
9	1633	163309			94,4
10	1633	163310			100,5
11	1633	163311			106,6
12	1633	163312			112,6
13	1633	163313			118,7
14	1633	163314			124,7
15	1633	163315			130,8
16	1633	163316			136,9
17	1633	163317			142,9

Reference n° match with the molded number underneath the belt.
Consult our Engineering department for details.

Materiale / ***Material / Materialien:***
Poliammide/*Polyamide/Polyamid*
Viti: Acciaio inox/*Screws: Stainless steel/Schrauben: Edelstahl*
Dadi: ferro zincato/*Nuts: zinc plated steel/Mutter: verzinkter Stahl*

Material Chemical Resistances

Chemical Agent up to 65°C	Polyamide	Steel	SS Aisi 304	SS Aisi 430	LF	MX	PFX	UHMW PE	PP/PPX
Acetone	G	U	G	G	G	A	A	G	G
Acetic acid (max 5%)	U	U	G	U	U	G	G	G	G
Alcohol	G	G	G	G	G	G	G	G	G
Ammonia	G	A	G	G	U	A	A	G	G
Beer	G	G	G	G	G	G	G	G	G
Benzene	G	G	G	G	G	U	U	A	G
Benzol	G	G	G	G	G	G	G	G	A
Carbon tetrachloride	G	A	A	A	G	/	/	A	U
Chocolat	A	G	G	G	G	G	G	A	G
Citric acid	A	U	G	A	A	G	G	G	G
Formic acid	U	G	G	G	G	A	A	G	/
Fresh water	G	U	G	G	G	G	G	G	G
Fruit juices	G	U	G	A	G	G	G	G	G
Hydrochloric acid (max 2%)	U	U	U	U	U	A	A	A	G
Hydrogen peroxide	U	U	G	A	U	/	/	A	/
Iodine	U	A	A	A	A	/	/	A	/
Lactic acid	G	U	G	U	G	G	G	G	G
Milk	G	G	G	G	G	G	G	G	G
Mustard	A	G	G	G	A	/	/	A	G
Nitric acid	U	U	G	A	U	U	U	A	G
Oil (vegetable or mineral)	G	G	G	G	G	U	U	G	G
Paraffin	G	G	G	G	G	G	G	G	/
Petrol	G	G	G	G	G	G	G	A	G
Phosphoric acid (max 10%)	U	U	G	U	U	U	U	G	G
Sea water	U	A	G	A	G	G	G	G	G
Soap and water	G	A	G	G	G	G	G	G	G
Sodium hydrochloride	G	U	A	U	G	A	A	G	G
Sodium hydroxide (max 25%)	G	U	G	G	U	U	U	G	/
Sodium hypochlorite	G	U	U	U	U	A	A	G	G
Soft Drinks	G	G	G	G	G	G	G	G	G
Spirits	G	G	G	G	G	G	G	G	G
Sulphide acid	U	U	U	U	U	G	G	U	G
Toluene	U	U	U	U	G	G	G	A	G
Turpentine	U	G	G	G	U	G	G	A	/
Vegetable juices	G	A	G	G	G	G	G	G	G
Vinegar	G	U	A	U	G	G	G	G	G
Whisky	G	G	G	G	G	G	G	G	G
Wine	G	G	G	G	G	G	G	G	G
Xilol	U	U	U	U	U	G	G	U	U

LEGENDA
G: *Good* / **A:** *Average* / **U:** *Unsatisfactory*

LF-LFA

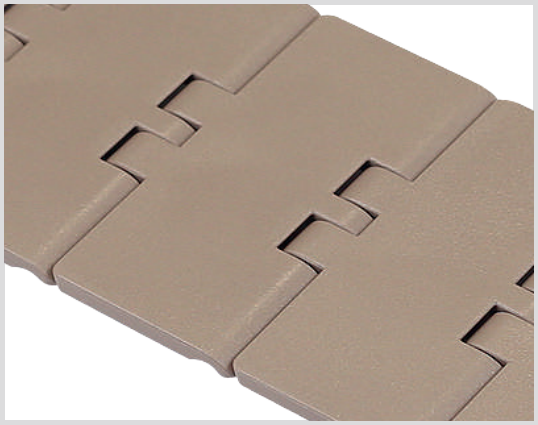

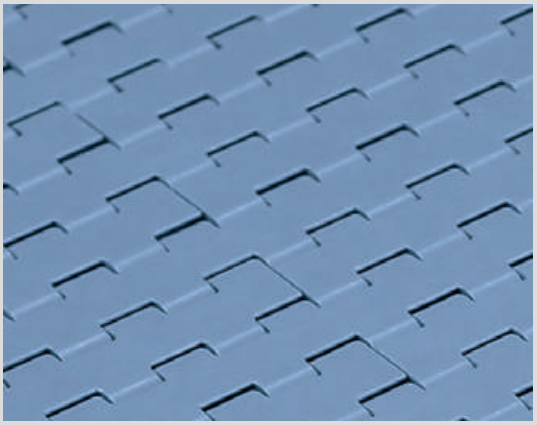

Description

Low friction Acetal Resin.
This material can be used in all common applications.
Colour: *Light Brown for Chains, RAL 5014 for Belts.*
Primary Components: *POM*

General information

Material abbreviation	Material	Chemical abbreviation	Allowable application temperatures						FDA Approval
			Fahrenheit			Celsius			
			Min	Max		Min	Max		
				Dry	Wet		Dry	Wet	
LF	Low friction acetal	POM	-40	176	149	-40	80	65	YES
LFA	Low friction acetal	POM	-40	176	149	-40	80	65	YES

Friction Factors Between Material and Product

Lubrification	Product Material					
	Paper & carton	Metal (steel)	Aluminium	Plastics & PET	Glass (returnable)	Glass (new)
Dry	0,28	0,25	0,25	0,21	0,24	0,20
Water	n.a.	0,20	0,18	0,16	0,18	0,15
W&s & Dry lube	n.a.	0,15	0,14	0,13	0,14	0,12
Oil	n.a.	0,10	n.a.	n.a.	n.a.	n.a.

Friction Factors Between Material and Product

Lubrification	Wearstrip Material		
	Stainless steel	UHMW-PE & PA	BluLub®
Dry	0,24	0,20	0,18
Water	0,19	0,16	0,14
W&s & Dry lube	0,15	0,10	0,10
Oil	0,10	0,10	0,10

Note

Material properties and performance of final product are subject to variation according to operating conditions, e.g. environmental conditions, chemicals, cleanliness.

MX



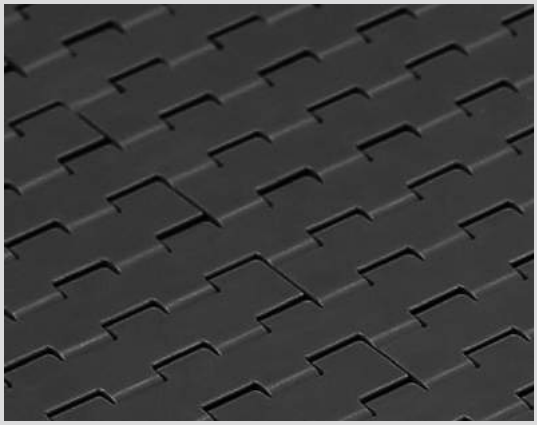

Materials

Description

Extra Performance material (PBT with additives) *with a very low coefficient of friction and improved wear resistance. Recommended for high speed and dry running applications.*
Colour: *Grey (RAL 7024)*
Primary Components: *PBT*

General information

Material abbreviation	Material	Chemical abbreviation	Allowable application temperatures						FDA Approval
			Fahrenheit			Celsius			
			Min	Max		Min	Max		
				Dry	Wet		Dry	Wet	
MX	Performance PBT	PBT	-40	248	140	-40	120	60	YES

Friction Factors Between Material and Product

Lubrification	Product Material					
	Paper & carton	Metal (steel)	Aluminium	Plastics & PET	Glass (returnable)	Glass (new)
Dry	0,20	0,18	0,15	0,13	0,14	0,12
Water	n.a.	0,16	0,14	0,12	0,13	0,12
W&s & Dry lube	n.a.	0,13	0,12	0,10	0,11	0,10
Oil	n.a.	0,10	n.a.	n.a.	n.a.	n.a.

Friction Factors Between Material and Product

Lubrification	Wearstrip Material		
	Stainless steel	UHMW-PE & PA	BluLub®
Dry	0,20	0,16	0,13
Water	0,17	0,11	0,09
W&s & Dry lube	0,14	0,09	0,08
Oil	0,10	0,10	0,10

Note

Material properties and performance of final product are subject to variation according to operating conditions, e.g. environmental conditions, chemicals, cleanliness.

PFX

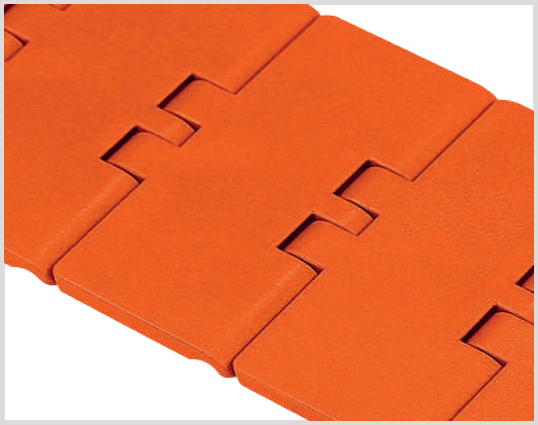

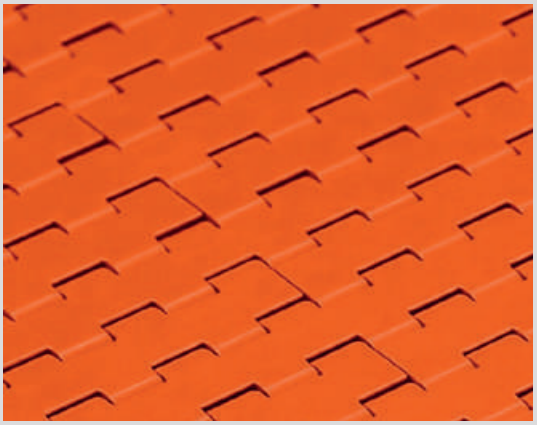

Description

Extra Performance material (PBT with additives) *with a very low coefficient of friction and improved wear resistance. Recommended for high speed and dry running applications.*
Colour: *Fluorescent Orange*
Primary Components: *PBT*

General information

Material abbreviation	Material	Chemical abbreviation	Allowable application temperatures						FDA Approval
			Fahrenheit			Celsius			
			Min	Max		Min	Max		
				Dry	Wet		Dry	Wet	
PFX	Extra performance PBT	PBT	-40	248	140	-40	120	60	YES

Power saving

RELATIVE TO *LF* = 100%

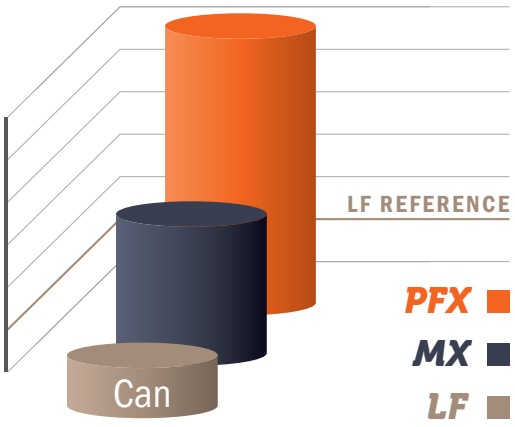

Example calculated with cans
UHMWPE chain guides
90° side-flexing conveyor

PV

RELATIVE TO *PFX* = 100%

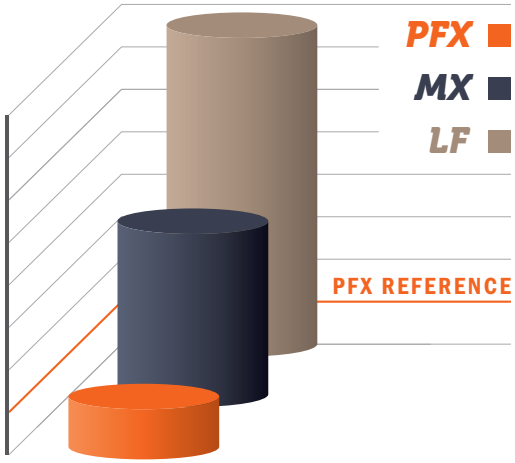

Note
Material properties and performance of final product are subject to variation according to operating conditions, e.g. environmental conditions, chemicals, cleanliness.

MPX



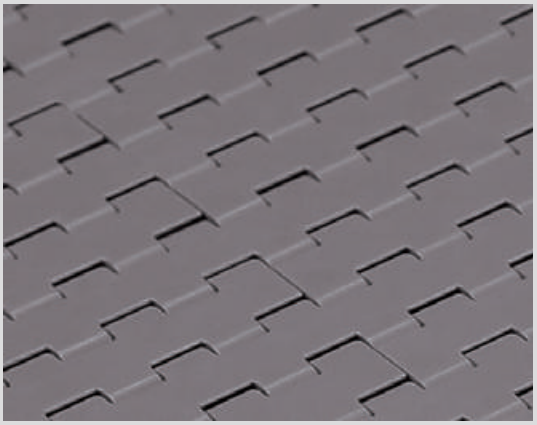

Materials

Description

High performance Material with a low coefficent of friction.
This material can increase wear life 25% over LF material.
Colour: *Brown*
Primary Components: *POM*

General information

Material abbreviation	Material	Chemical abbreviation	Allowable application temperatures						FDA Approval
			Fahrenheit			Celsius			
			Min	Max		Min	Max		
				Dry	Wet		Dry	Wet	
MP	Lucricated Acetal	POM	-40	176	149	-40	80	65	YES

Friction Factors Between Material and Product

Lubrification	Product Material					
	Paper & carton	Metal (steel)	Aluminium	Plastics & PET	Glass (returnable)	Glass (new)
Dry	0,24	0,22	0,21	0,19	0,21	0,16
Water	n.a.	0,19	0,17	0,15	0,17	0,14
W&s & Dry lube	n.a.	0,15	0,14	0,13	0,13	0,12
Oil	n.a.	0,10	n.a.	n.a.	n.a.	n.a.

Friction Factors Between Material and Product

Lubrification	Wearstrip Material		
	Stainless steel	UHMW-PE & PA	BluLub®
Dry	0,23	0,19	0,17
Water	0,19	0,15	0,14
W&s & Dry lube	0,15	0,10	0,10
Oil	0,10	0,10	0,10

Note

Material properties and performance of final product are subject to variation according to operating conditions, e.g. environmental conditions, chemicals, cleanliness.

DKM





Description

Aramide reinforced acetal material
It's commonly used in dry running glass handling applications.
Colour: *Grey*
Primary Component: *POM*

General information

Material abbreviation	Material	Chemical abbreviation	Allowable application temperatures						FDA Approval
			Fahrenheit			Celsius			
			Min	Max		Min	Max		
				Dry	Wet		Dry	Wet	
DKM	Aramide reinforced acetal	POM	-40	176	149	-40	80	65	-

Friction Factors Between Material and Product

Lubrification	Product Material					
	Paper & carton	Metal (steel)	Aluminium	Plastics & PET	Glass (returnable)	Glass (new)
Dry	0,21	0,19	0,16	0,20	0,15	0,13
Water	n.a.	0,17	0,15	0,15	0,14	0,13
W&s & Dry lube	n.a.	0,14	0,13	0,13	0,12	0,11
Oil	n.a.	0,10	n.a.	n.a.	n.a.	n.a.

Friction Factors Between Material and Product

Lubrification	Wearstrip Material		
	Stainless steel	UHMW-PE & PA	BluLub®
Dry	0,21	0,19	0,17
Water	0,18	0,15	0,14
W&s & Dry lube	0,15	0,11	0,11
Oil	0,10	0,10	0,10

Note

Material properties and performance of final product are subject to variation according to operating conditions, e.g. environmental conditions, chemicals, cleanliness.

MWX



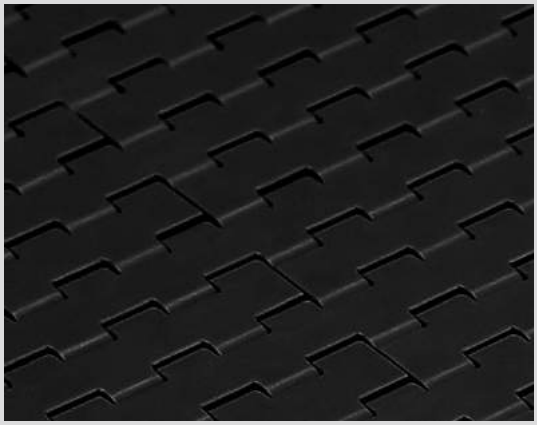

Materials

Description

MWX increases wear life

Used in applications where chain is subject to abrasives conditions such as glass sand and dirt.

Colour: *Black*

Primary Component: *Nylon (PA)*

General information

Material abbreviation	Material	Chemical abbreviation	Allowable application temperatures						FDA Approval
			Fahrenheit			Celsius			
			Min	Max		Min	Max		
				Dry	Wet		Dry	Wet	
MWX	Polyamid Composite	PA	-40	219	N.R.	-40	104	N.R.	-

Friction Factors Between Material and Product

Lubrification	Product Material					
	Paper & carton	Metal (steel)	Aluminium	Plastics & PET	Glass (returnable)	Glass (new)
Dry	0,24	0,21	0,18	0,15	0,17	0,14
Water	n.a.	0,19	0,17	0,14	0,15	0,14
W&s & Dry lube	n.a.	0,15	0,14	0,12	0,13	0,12
Oil	n.a.	0,10	n.a.	n.a.	n.a.	n.a.

Friction Factors Between Material and Product

Lubrification	Wearstrip Material		
	Stainless steel	UHMW-PE & PA	BluLub®
Dry	0,24	0,19	0,15
Water	0,20	0,13	0,11
W&s & Dry lube	0,17	0,11	0,09
Oil	0,10	0,10	0,10

Note

Material properties and performance of final product are subject to variation according to operating conditions, e.g. environmental conditions, chemicals, cleanliness.

PP



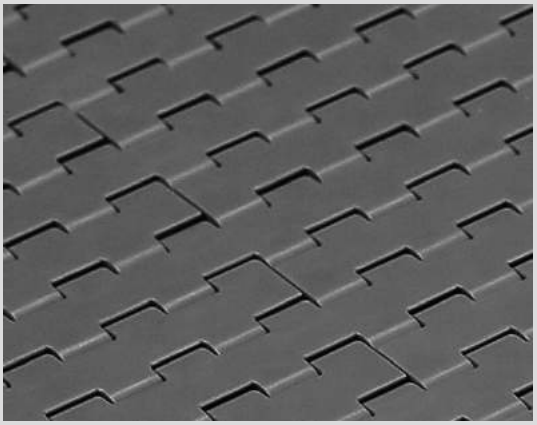

Description

Polypropylene
for better chemical resistance and higher temperatures.
Colour: *Grey*
Primary Component: *PP*

General information

Material abbreviation	Material	Chemical abbreviation	Allowable application temperatures						FDA Approval
			Fahrenheit			Celsius			
			Min	Max		Min	Max		
				Dry	Wet		Dry	Wet	
PP	Polypropylene	PP	40	220	212	4	104	100	YES

Friction Factors Between Material and Product

Lubrification	Product Material					
	Paper & carton	Metal (steel)	Aluminium	Plastics & PET	Glass (returnable)	Glass (new)
Dry	0,40	0,30	0,32	0,28	0,29	0,26
Water	n.a.	0,24	0,26	0,22	0,23	0,21
W&s & Dry lube	n.a.	0,20	0,20	0,18	0,19	0,18
Oil	n.a.	0,10	n.a.	n.a.	n.a.	n.a.

Friction Factors Between Material and Product

Lubrification	Wearstrip Material		
	Stainless steel	UHMW-PE & PA	BluLub®
Dry	0,29	0,24	0,21
Water	0,23	0,19	0,17
W&s & Dry lube	0,19	0,13	0,13
Oil	0,10	0,10	0,10

Note

Material properties and performance of final product are subject to variation according to operating conditions, e.g. environmental conditions, chemicals, cleanliness.

PPX



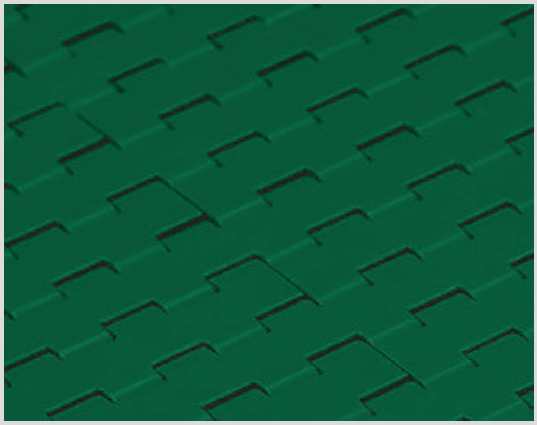

Materials

Description

Reinforced Polypropylene
for improved heat stability and chemical resistance.
Colour: *Green*
Primary Component: *PP*

General information

Material abbreviation	Material	Chemical abbreviation	Allowable application temperatures						FDA Approval
			Fahrenheit			Celsius			
			Min	Max		Min	Max		
				Dry	Wet		Dry	Wet	
PPX	Reinforced Polypropylene	PP	40	220	212	4	104	100	YES

Friction Factors Between Material and Product

Lubrification	Product Material					
	Paper & carton	Metal (steel)	Aluminium	Plastics & PET	Glass (returnable)	Glass (new)
Dry	0,40	0,30	0,32	0,28	0,29	0,26
Water	n.a.	0,24	0,26	0,22	0,23	0,21
W&s & Dry lube	n.a.	0,20	0,20	0,18	0,19	0,18
Oil	n.a.	0,10	n.a.	n.a.	n.a.	n.a.

Friction Factors Between Material and Product

Lubrification	Wearstrip Material		
	Stainless steel	UHMW-PE & PA	BluLub®
Dry	0,29	0,24	0,21
Water	0,23	0,19	0,17
W&s & Dry lube	0,19	0,13	0,13
Oil	0,10	0,10	0,10

Note

Material properties and performance of final product are subject to variation according to operating conditions, e.g. environmental conditions, chemicals, cleanliness.

AS



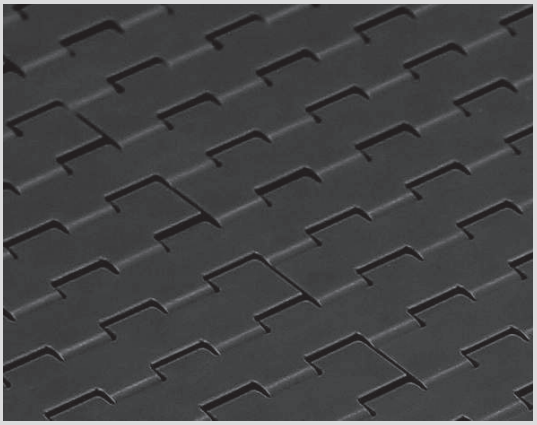

Materials

Description

AS material

eliminates the static accumulation that can happen during conveying products.

Colour: *Black*

Primary Components: *POM*

General information

Material abbreviation	Material	Chemical abbreviation	Allowable application temperatures						FDA Approval
			Fahrenheit			Celsius			
			Min	Max		Min	Max		
				Dry	Wet		Dry	Wet	
AS	Antistatic Acetal	POM	-4	180	N.R.	-18	82	N.R.	YES

Friction Factors Between Material and Product

Lubrification	Product Material					
	Paper & carton	Metal (steel)	Aluminium	Plastics & PET	Glass (returnable)	Glass (new)
Dry	0,35	0,28	0,29	0,25	0,27	0,24
Water	n.a.	n.a.	n.a.	n.a.	n.a.	n.a.
W&s & Dry lube	n.a.	n.a.	n.a.	n.a.	n.a.	n.a.
Oil	n.a.	n.a.	n.a.	n.a.	n.a.	n.a.

Friction Factors Between Material and Product

Lubrification	Wearstrip Material		
	Stainless steel	UHMW-PE & PA	BluLub®
Dry	0,27	0,22	0,20
Water	n.a.	n.a.	n.a.
W&s & Dry lube	n.a.	n.a.	n.a.
Oil	n.a.	n.a.	n.a.

Note

Material properties and performance of final product are subject to variation according to operating conditions, e.g. environmental conditions, chemicals, cleanliness.

SS



Materials

Description

Ferritic Stainless Steel (1.4016)

for standard applications.

General information

Material abbreviation	Material	Chemical abbreviation	Allowable application temperatures						FDA Approval
			Fahrenheit			Celsius			
			Min	Max		Min	Max		
				Dry	Wet		Dry	Wet	
SS	Standard Stainless Steel	1.4016	-22	750	265	-30	400	130	-

Friction Factors Between Material and Product

Lubrification	Product Material					
	Paper & carton	Metal (steel)	Aluminium	Plastics & PET	Glass (returnable)	Glass (new)
Dry	0,40	0,50	0,35	0,30	0,47	0,35
Water	n.a.	0,35	0,30	0,25	0,31	0,30
W&s & Dry lube	n.a.	0,20	0,15	0,15	0,21	0,15
Oil	n.a.	0,20	n.a.	n.a.	n.a.	n.a.

Friction Factors Between Material and Product

Lubrification	Wearstrip Material		
	Stainless steel	UHMW-PE & PA	BluLub®
Dry	n.a.	0,35	0,32
Water	0,40	0,27	0,24
W&s & Dry lube	0,20	0,18	0,15
Oil	0,20	0,18	0,15

Note

Material properties and performance of final product are subject to variation according to operating conditions, e.g. environmental conditions, chemicals, cleanliness.

SSE



Materials

Description

Specially treated Ferritic Stainless Steel (1.4589)
for improved working-load and less friction.

General information

Material abbreviation	Material	Chemical abbreviation	Allowable application temperatures						FDA Approval
			Fahrenheit			Celsius			
			Min	Max		Min	Max		
				Dry	Wet		Dry	Wet	
SSE	Special Stainless Steel	1.4589	-22	750	265	-30	400	130	-

Friction Factors Between Material and Product

Lubrification	Product Material					
	Paper & carton	Metal (steel)	Aluminium	Plastics & PET	Glass (returnable)	Glass (new)
Dry	0,38	0,48	0,33	0,29	0,45	0,33
Water	n.a.	0,33	0,29	0,24	0,29	0,29
W&s & Dry lube	n.a.	0,19	0,14	0,14	0,20	0,14
Oil	n.a.	0,19	n.a.	n.a.	n.a.	n.a.

Friction Factors Between Material and Product

Lubrification	Wearstrip Material		
	Stainless steel	UHMW-PE & PA	BluLub®
Dry	n.a.	0,33	0,30
Water	0,38	0,26	0,23
W&s & Dry lube	0,19	0,17	0,14
Oil	0,19	0,17	0,14

Note

Material properties and performance of final product are subject to variation according to operating conditions, e.g. environmental conditions, chemicals, cleanliness.

SSM



Materials

Description

Specially treated Ferritic SS (1.4589)
with optimized surface finish for superior sliding properties. For High-Speed and more critical applications.

General information

Material abbreviation	Material	Chemical abbreviation	Allowable application temperatures						FDA Approval
			Fahrenheit			Celsius			
			Min	Max		Min	Max		
				Dry	Wet		Dry	Wet	
SSM	Max Speed Stainless Steel	1.4589	-22	750	265	-30	400	130	-

Friction Factors Between Material and Product

Lubrification	Product Material					
	Paper & carton	Metal (steel)	Aluminium	Plastics & PET	Glass (returnable)	Glass (new)
Dry	0,34	0,43	0,30	0,26	0,40	0,30
Water	n.a.	0,30	0,26	0,21	0,26	0,26
W&s & Dry lube	n.a.	0,17	0,13	0,13	0,18	0,13
Oil	n.a.	0,17	n.a.	n.a.	n.a.	n.a.

Friction Factors Between Material and Product

Lubrification	Wearstrip Material		
	Stainless steel	UHMW-PE & PA	BluLub®
Dry	n.a.	0,32	0,29
Water	0,36	0,24	0,22
W&s & Dry lube	0,18	0,16	0,14
Oil	0,18	0,16	0,14

Note

Material properties and performance of final product are subject to variation according to operating conditions, e.g. environmental conditions, chemicals, cleanliness.

SSA



Description

Austenitic Stainless Steel with high resistance to corrosion and acid (AISI 304)

for improved working-load and less friction.

Materials

General information

Material abbreviation	Material	Chemical abbreviation	Allowable application temperatures						FDA Approval
			Fahrenheit			Celsius			
			Min	Max		Min	Max		
				Dry	Wet		Dry	Wet	
SSA	Austenitic Stainless Steel	AISI 304	-22	750	265	-30	400	130	-

Friction Factors Between Material and Product

Lubrification	Product Material					
	Paper & carton	Metal (steel)	Aluminium	Plastics & PET	Glass (returnable)	Glass (new)
Dry	0,43	0,38	0,34	0,30	0,33	0,33
Water	n.a.	0,30	0,27	0,21	0,29	0,29
W&s & Dry lube	n.a.	0,15	0,14	0,14	0,15	0,15
Oil	n.a.	n.a.	n.a.	n.a.	n.a.	n.a.

Friction Factors Between Material and Product

Lubrification	Wearstrip Material		
	Stainless steel	UHMW-PE & PA	BluLub®
Dry	0,40	0,30	0,30
Water	0,35	0,22	0,22
W&s & Dry lube	0,15	0,15	0,15
Oil	0,15	0,10	0,10

Note

Material properties and performance of final product are subject to variation according to operating conditions, e.g. environmental conditions, chemicals, cleanliness.

PA

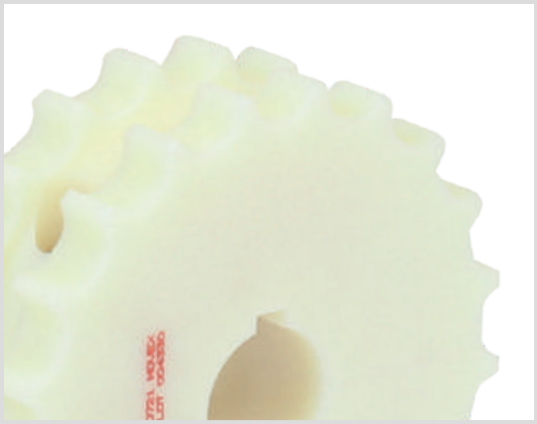

Description

PA Polyamide composite

The high crystallinity of this material gives it excellent mechanical properties such as high abrasion, high wear resistance as well as good hardness and stiffness.

Colour: *Yellow*

Primary Component: *Polyamide (PA)*

Screws: *Stainless steel*

Nuts: *Zinc plated steel*

Materials

General information

Material abbreviation	Material	Chemical abbreviation	Allowable application temperatures						FDA Approval
			Fahrenheit			Celsius			
			Min	Max		Min	Max		
				Dry	Wet		Dry	Wet	
PA	Polyamide	PA	-40	221	N.R.	-40	105	N.R.	YES

Note: Material properties and performance of final product are subject to variation according to operating conditions, e.g. environmental conditions, chemicals, cleanliness.

Reinforced PA



Description

PA Polyamide reinforced

High quality polyamide specifically developed for injection molding, glass fiber reinforced.

Colour: *Black*

Primary Component: *Polyamide (PA)*

Screws: *Stainless steel*

Nuts: *Nickel plated brass*

Materials

General information

Material abbreviation	Material	Chemical abbreviation	Allowable application temperatures						FDA Approval
			Fahrenheit			Celsius			
			Min	Max		Min	Max		
				Dry	Wet		Dry	Wet	
RPA	Polyamide Reinforced	PA	-4	248	248	-20	120	120	-

Note: Material properties and performance of final product are subject to variation according to operating conditions, e.g. environmental conditions, chemicals, cleanliness.

Index

Article -Nr.	Page
100003-30	311
10010102	9
10010103	9
10010104	9
10010105	9
10010106	9
10010107	9
10010114	9
10010202	9
10010203	9
10010204	9
10010205	9
10010206	9
10010207	9
10010214	9
10010216	9
10010302	8
10010303	8
100103-30	311
10010402	9
10010403	9
10010404	9
10010405	9
10010406	9
10010407	9
10020102	20
10020105	20
10020107	20
10020202	20
100203-30	311
10030107	10
10030207	10
100303-30	311
10030407	10
10040107	22
10040207	22
100403-30	312
10050107	10
10060107	23
100603-30	312
10070100	11
10070101	11
10070102	11
10070104	11
10070108	11
10070109	11
10070114	11
100703	313
100703B	313
10070400	11
10070401	11
10070408	11
10070409	11
10070414	11
10080102	13
10080103	13
10080105	13
10080107	13
10080202	13
10080203	13
10080205	13
10080207	13
100803	313
10080302	12
10080303	12
100803B	313
10090102	25
10090107	25
100903-30	313
10100102	14
10100105	14
10100107	14
10100202	14
101003-30	313
10100402	14
10100405	14
10100407	14
10101	293
10102	293
101103-30	314
101103-60	314
10120102	15
10120104	15
10120105	15
10120107	15
101203-30	314
10120402	15
10120405	15
10120407	15
101303	314
10140102	16
10140103	16
10140104	16
10140105	16
10140107	16
10140202	16
10140203	16
10140205	16
10140207	16
101403	296
101403C	296
10140402	16
10140403	16
10140405	16
10140407	16
10150102	24
10150107	24
101503	296
101503C	296
10160102	17
10160104	17
10160105	17
10160107	17
101603	296
101603-30	296
101603C	296
10160402	17
10160404	17
10160405	17
10160407	17
101703	296
101703-30	296
101703-75	296
101703C	296
10180107	18
101803	297
101803C	297
10190107	26
101903	297
101903C	297
10200102	21
102003	297
102003C	297
10201	293
10202	293
10210117	19
10210118	19
102103	298
102103-30	298
102103-75	298
102103C	298
10220202	27
10220205	27
10220206	27
10220207	27
102203	298
102203-30	298
102203C	298
102303	298
102303C	298
102402	298
102403	298
102403-30	298
102403C	298
102503	299
102503-30	299
102503C	299
102603	299
102603C	299
102703	299
102703C	299
102803	299
102803C	299
102903	300
102903C	300
10299B	293
103003	300
103003C	300
10300B-30	294
10301	294
10302	294
10303	294
103103	300
103103C	300
103203	301
103203C	301
103303	301
103303C	301
103403	301
103403C	301
103503	302
103503C	302
103600B	324
103700B	325
103803	295
103923	343
103923-30	343
103923-60	343
103923C	343
104003	314
104003C	314
10400B	294
10401	294
10402	294
10403	294
104103	331
104103C	331
104203	331
104203C	331
104303	331
104303C	331
104403	332
104403C	332
104503	332
104503C	332
104602-30	300
104602C	300
104603C	300
10501	302
10502	302
10503	302
10504	302
10505	302
10506	302
10507	302
10508	302
10509	302
10510	302
105203	310
105203C	310
105303	332
105303C	332
105403	333
105403C	333
105501	334
105501C	334
105600BC	341
105604C	341
105630BC	341
105634C	341
105700BC	341
105704C	341
105801	295
105801C	295
105802	295
105802C	295
105901	307
105901B	307
105901BC	307
105901C	307
105902	307
105902C	307
10592	302
10594	302
10595	302
10596	302
10597	302
106001	308
106001C	308
106002	308
106002C	308
10601	302
10602	302
106104BC	342
106104C	342
106200B	326
106301C	336
106302C	336
106401C	336
106500BC	338
106504C	338
106701C	316
106763	316
106800B	326
10701	303
10702	303
107200B	327
107300B	327
107401	293
10801	303
10801C	303
10802	303
10802C	303
10901	303
10901B	303
10901B-30	303
10901BC	303
10901C	303
10902	303
10902C	303
10903	303
10903C	303
11001	304
11001C	304
11002	304
11002C	304
11010102	31
11010103	31
11010104	31
11010105	31
11010106	31
11010107	31
11010114	31
11010302	31
11010303	31
11010304	31
11010305	31
11010306	31
11010307	31
11010314	31
11011602	32
11011603	32
11011604	32
11011605	32
11011606	32
11011607	32
11011614	32
11011702	32
11011703	32
11011704	32
11011705	32
11011706	32
11011707	32
11011714	32
11012502	32
11012503	32
11012504	32
11012505	32
11012506	32
11012507	32
11012514	32
11013002	31
11013003	31
11013004	31
11013005	31
11013006	31
11013007	31
11013014	31
11020102	34
11020103	34
11020302	34
11020303	34
11022502	34
11022503	34
11023002	34
11023003	34
11030102	35
11030105	35
11030107	35
11030302	35
11030305	35
11030307	35
11040107	36
11040108	36
11040109	36
11040307	36
11040308	36
11040309	36
11042507	36
11042508	36
11042509	36
11050107	37

Article -Nr.	Page
11050108	37
11050109	37
11050307	37
11050308	37
11050309	37
11060107	38
11060108	38
11060109	38
11070107	39
11070108	39
11070109	39
11070307	39
11070308	39
11070309	39
11080107	40
11080108	40
11080109	40
11090107	41
11090108	41
11090109	41
11100102	47
11100103	47
11100105	47
11100302	47
11100303	47
11100305	47
11101	308
11101-60	308
11101B	308
11101BC	308
11101C	308
11102	308
11102502	47
11102503	47
11102505	47
11102-60	308
11102C	308
11103002	47
11103003	47
11103005	47
11110102	48
11110103	48
11110105	48
11110302	48
11110303	48
11110305	48
11111602	48
11111603	48
11111605	48
11111702	48
11111703	48
11111705	48
11112502	48
11112503	48
11112505	48
11113002	48
11113003	48
11113005	48
11120102	50
11120104	50
11120105	50
11120302	50
11120304	50
11120305	50
11130107	52
11130108	52
11130109	52
11130307	52
11130308	52
11130309	52
11140105	55
11140106	55
11140107	55
11140108	55
11140109	55
11140305	55
11140306	55
11140307	55
11140308	55
11140309	55
11141705	55
11141706	55
11141707	55
11141708	55
11141709	55
11142505	55
11142506	55
11142507	55
11142508	55
11142509	55
11150107	53
11150108	53
11150109	53
11160107	56
11160108	56
11160109	56
11160307	56
11160308	56
11160309	56
11170107	54
11170108	54
11170109	54
11180105	57
11180107	57
11180108	57
11180109	57
11190102	42
11190105	42
11190302	42
11190305	42
11191602	42
11191605	42
11200102	60
11200105	60
11200202	60
11200205	60
11200302	60
11200305	60
11201	304
11201C	304
11202	304
11202C	304
11210102	60
11210105	60
11210202	60
11210205	60
11210302	60
11210305	60
11220300	70
11220310	71
11220400	70
11220410	71
11230300	70
11230310	71
11230400	70
11230410	71
11240102	43
11240105	43
11240302	43
11240305	43
11250102	44
11250105	44
11250302	44
11250305	44
11251702	44
11251705	44
11252502	44
11252505	44
11260102	51
11260105	51
11260302	51
11260305	51
11280102	61
11280105	61
11280202	61
11280205	61
11280302	61
11280305	61
11290102	61
11290105	61
11290202	61
11290205	61
11290302	61
11290305	61
11300300	72
11300400	72
11301	344
11302	344
11310300	72
11310400	72
11320102	60
11320105	60
11320202	60
11320205	60
11320302	60
11320305	60
11330102	60
11330105	60
11330202	60
11330205	60
11330302	60
11330305	60
11340102	61
11340105	61
11340202	61
11340205	61
11340302	61
11340305	61
11350102	61
11350105	61
11350202	61
11350205	61
11350302	61
11350305	61
11360400	73
11360400-FA	74
11360400-FB	74
11360400-FC	74
11360400-FD	74
11400117	67
11400119	67
11400317	67
11400319	67
11401	344
11402	344
11410117	67
11410119	67
11410317	67
11410319	67
11501	345
11502	345
11510103	260
11510105	260
11510303	260
11510305	260
11511603	260
11511605	260
11513003	260
11513005	260
11520103	262
11520105	262
11520303	262
11520305	262
11521603	262
11521605	262
11523003	262
11523005	262
11530103	263
11530105	263
11530303	263
11530305	263
11531603	263
11531605	263
11531703	263
11531705	263
11540103	261
11540105	261
11540303	261
11540305	261
11543003	261
11543005	261
11550102	33
11550105	33
11560102	49
11570102	49
11570105	49
11590102	58
11590105	58
11590106	58
11590107	58
11590108	58
11590109	58
11590302	58
11590305	58
11590306	58
11590307	58
11590308	58
11590309	58
11600102	58
11600105	58
11600106	58
11600107	58
11600108	58
11600109	58
11600302	58
11600305	58
11600306	58
11600307	58
11600308	58
11600309	58
11601	345
11602	345
11610107	59
11610108	59
11610109	59
11620107	59
11620108	59
11620109	59
11630102	33
11630105	33
11640110	68
11650110	69
11660102	49
11660105	49
11670107	65
11690108	64
11700119	45
11700120	45
11700121	45
11701	334
11701C	334
11702	334
11702C	334
11703	334
11703C	334
11710119	46
11710120	46
11710121	46
11720300	75
11720400	75
11730300	75
11730400	75
11760107	65
11770107	65
11780108	64
11790108	64
11800102	66
11801	306
11801C	306
11802	306
11802C	306
11810102	66
11820102	66
11830102	62
11830105	62
11830202	62
11830205	62
11830302	62
11830305	62
11840102	62
11840105	62
11840202	62
11840205	62
11840302	62
11840305	62
11850102	62
11850105	62
11850202	62
11850205	62
11850302	62
11850305	62
11860102	62
11860105	62
11860202	62
11860205	62
11860302	62
11860305	62
11870106	63
11870107	63
11870206	63
11870207	63
11870306	63
11870307	63
11880106	63
11880107	63
11880206	63
11880207	63
11880306	63
11880307	63
11890106	63
11890107	63
11890206	63

Index

Article -Nr.	Page
11890206	63
11890207	63
11890207	63
11890306	63
11890307	63
11900103	264
11900105	264
11900303	264
11900305	264
11901	315
11901603	264
11901605	264
11901703	264
11901705	264
11901B	315
11901BC	315
11901C	315
1193019330	185
1193039330	185
1193139330	185
11940100	76
11963	315
11963B	315
11967	315
11967B	315
12001	315
12001B	315
12001BC	315
12001C	315
12010400	77
12010401	77
12010402	77
12010403	77
12020402	78
12020404	78
12030402	79
12063	315
12063B	315
12067	315
12067B	315
12101	315
12101B	315
12101BC	315
12101C	315
12163	315
12163B	315
12167	315
12167B	315
12201C	316
12263	316
12301C	317
12363	317
12401C	318
12463	318
12501C	319
12563	319
13001	321
13001C	321
13002C	321
13101	321
13101B	321
13102	321
13102B	321
13301	305
13301C	305
13302	305
13302C	305
13303	305
13303C	305
13304	305
13304C	305
13305B	305
13305BC	305
13306B	305
13306BC	305
13401	330
13401C	330
1348 Series	249
13501	335
13501C	335
13502	335
13502C	335
13601	335
13601C	335
13602	335
13602C	335
13701	333
13701B	333
13701BC	333
13701C	333
13702	333
13702C	333
13711	333
13711B	333
13711BC	333
13711C	333
13720	333
14001C	317
14063	317
14101C	318
14163	318
14201C	319
14263	319
14301C	318
14363	318
14401C	319
14463	319
14503C	320
14563	320
14601C	317
14663	317
14701	305
14701C	305
14801	305
14801B	305
14801BC	305
14801C	305
14802	305
14802C	305
14803C	305
14950	307
14950C	307
14952	307
14952C	307
15001	295
15002	295
150101	269
150102	269
150103	269
150104	269
150106	269
150107	269
150108	269
150150	269
150151	269
150152	269
150153	269
150154	269
150201	269
150202	269
150203	269
150204	269
150206	269
150207	269
150208	269
150250	269
150251	269
150252	269
150253	269
150254	269
150301	269
150302	269
150303	269
150304	269
150306	269
150307	269
150308	269
150350	269
150351	269
150352	269
150353	269
150354	269
150401	269
150402	269
150403	269
150404	269
150406	269
150407	269
150408	269
150450	269
150451	269
150452	269
150453	269
150454	269
150501	270
150502	270
150503	270
150504	270
150506	270
150507	270
150508	270
150551	270
150552	270
150553	270
150554	270
150601	270
150602	270
150603	270
150604	270
150606	270
150607	270
150608	270
150651	270
150652	270
150653	270
150654	270
150701	270
150702	270
150703	270
150704	270
150706	270
150707	270
150708	270
150751	270
150752	270
150753	270
150754	270
15101	322
15102	322
15103	322
15104	322
15105	322
15106	323
15107	323
15108	323
15109	323
15110	323
151101	272
151102	272
151103	272
151104	272
151106	272
151107	272
151108	272
151150	272
151151	272
151152	272
151153	272
151154	272
151201	272
151202	272
151203	272
151204	272
151206	272
151207	272
151208	272
151250	272
151251	272
151252	272
151253	272
151254	272
151301	272
151302	272
151303	272
151304	272
151306	272
151307	272
151308	272
151350	272
151351	272
151352	272
151353	272
151354	272
151401	272
151402	272
151403	272
151404	272
151406	272
151407	272
151408	272
151450	272
151451	272
151452	272
151453	272
151454	272
15201C	316
152101	273
152102	273
152103	273
152104	273
152106	273
152107	273
152108	273
152150	273
152151	273
152152	273
152153	273
152154	273
152201	273
152202	273
152203	273
152204	273
152206	273
152207	273
152208	273
152250	273
152251	273
152252	273
152253	273
152254	273
152301	273
152302	273
152303	273
152304	273
152306	273
152307	273
152308	273
152350	273
152351	273
152352	273
152353	273
152354	273
152401	273
152402	273
152403	273
152404	273
152406	273
152407	273
152408	273
152450	273
152451	273
152452	273
152453	273
152454	273
152501	274
152502	274
152503	274
152504	274
152506	274
152507	274
152508	274
152551	274
152552	274
152553	274
152554	274
152601	274
152602	274
152603	274
152604	274
152606	274
152607	274
152608	274
15263	316
152651	274
152652	274
152653	274
152654	274
152701	274
152702	274
152703	274
152704	274
152706	274
152707	274
152708	274
152751	274
152752	274
152753	274
152754	274
152801	274
152802	274
152803	274
152804	274

Article -Nr.	Page
152806	274
152807	274
152808	274
152851	274
152852	274
152853	274
152854	274
15300	312
15300-30	312
15300C	312
15302	312
15302C	312
15303	312
15303-30	312
153101	277
153102	277
153103	277
153104	277
153106	277
153107	277
153108	277
153150	277
153151	277
153152	277
153153	277
153154	277
153201	277
153202	277
153203	277
153204	277
153206	277
153207	277
153208	277
153250	277
153251	277
153252	277
153253	277
153254	277
153301	277
153302	277
153303	277
153304	277
153306	277
153307	277
153308	277
153350	277
153351	277
153352	277
153353	277
153354	277
153354	277
153401	277
153402	277
153403	277
153404	277
153406	277
153407	277
153408	277
153450	277
153451	277
153452	277
153453	277
153454	277
153501	278
153502	278
153503	278
153504	278
153506	278
153507	278
153508	278
153551	278
153552	278
153553	278
153554	278
153601	278
153602	278
153603	278
153604	278
153606	278
153607	278
153608	278
153651	278
153652	278
153653	278
153654	278
153701	278
153702	278
153703	278
153704	278
153706	278
153707	278
153708	278
153751	278
153752	278
153753	278
153754	278
153801	278
153802	278
153803	278
153804	278
153806	278
153807	278
153808	278
153851	278
153852	278
153853	278
153854	278
153901	277
153902	277
153903E	277
153904E	277
153906	277
153907	277
153908E	277
153950	277
153951	277
153952	277
153953E	277
153954E	277
15401	330
15401B	330
15401BC	330
15401C	330
154101	281
154102	281
154103	281
154104	281
154150	281
154151	281
154152	281
154153	281
154154	281
154201	281
154202	281
154203	281
154204	281
154250	281
154251	281
154252	281
154253	281
154254	281
154301	281
154302	281
154303	281
154304	281
154350	281
154351	281
154352	281
154353	281
154354	281
154501	282
154502	282
154503	282
154504	282
154506	282
154507	282
154508	282
154551	282
154552	282
154553	282
154554	282
154601	282
154602	282
154603	282
154604	282
154606	282
154607	282
154608	282
154651	282
154652	282
154653	282
154654	282
154701	282
154702	282
154703	282
154704	282
154706	282
154707	282
154708	282
154751	282
154752	282
154753	282
154754	282
15501	330
15501C	330
155104	286
155105	286
155106	286
155107	286
155108	286
155204	286
155206	286
155207	286
155208	286
155306	286
155307	286
155308	286
155309	286
155310	286
155311	286
155809	287
155809	287
155810	287
155905	286
155908	286
155909	286
155910	286
155912	286
15601	304
15601C	304
15602	304
15602C	304
156101	267
156102	267
156103	267
156104	267
156106	267
156107	267
156108	267
156150	267
156151	267
156152	267
156153	267
156154	267
156201	267
156202	267
156203	267
156204	267
156206	267
156207	267
156208	267
156250	267
156251	267
156252	267
156253	267
156254	267
156301	267
156302	267
156303	267
156304	267
156306	267
156307	267
156308	267
156350	267
156351	267
156352	267
156353	267
156354	267
156401	267
156402	267
156403	267
156404	267
156406	267
156407	267
156408	267
156450	267
156451	267
156452	267
156453	267
156454	267
15699C	304
15701	306
15701C	306
15702	306
15702C	306
157101	283
157102	283
157103	283
157104	283
157150	283
157150R	504
157151	283
157151R	504
157152	283
157152R	504
157153	283
157153R	504
157154	283
157154R	504
157201	283
157202	283
157203	283
157204	283
157250	283
157250R	504
157251	283
157251R	504
157252	283
157252R	504
157253	283
157253R	504
157254	283
157254R	504
157301	283
157302	283
157303	283
157304	283
157350	283
157350R	504
157351	283
157351R	504
157352	283
157352R	504
157353	283
157353R	504
157354	283
157354R	504
157401	283
157402	283
157403	283
157404	283
157450	283
157450R	504
157451	283
157451R	504
157452	283
157452R	504
157453	283
157453R	504
157454	283
157454R	504
15799C	306
15800BC	337
15800C	337
15801BC	337
15801C	337
15802BC	337
15802C	337
15803BC	337
15803C	337
158101E	271
158106E	271
158150E	271
158151E	271
158201E	271
158202E	271
158206E	271
158207E	271
158250E	271
158251E	271
158252E	271
158301	271
158302	271
158303	271
158304	271
158306	271
158307	271
158308	271
158350	271
158351	271
158352	271
158353	271

Index

Article -Nr.	Page
158354	271
158401	271
158402	271
158403	271
158404	271
158406	271
158407	271
158408	271
158450	271
158451	271
158452	271
158453	271
158454	271
15901	334
15901C	334
159896E	266
159936E	266
16003	328
16003C	328
160101E	266
160111E	266
160201E	266
160206E	266
160301	266
160302	266
160303	266
160304	266
160306	266
160307	266
160308	266
160704	286
160705	286
160706	286
160707	286
160708	286
160804	286
160806	286
160807	286
160808	286
160906	286
160907	286
160908	286
160909	286
160910	286
160911	286
161005	286
161008	286
161009	286
161010	286
161012	286
16103	328
16103C	328
161101	279
161102	279
161103	279
161104	279
161106	279
161107	279
161108	279
161150	279
161151	279
161152	279
161153	279
161154	279
161201	279
161202	279
161203	279
161204	279
161206	279
161207	279
161208	279
161250	279
161251	279
161252	279
161253	279
161254	279
161301	279
161302	279
161303	279
161304	279
161306	279
161307	279
161308	279
161350	279
161351	279
161352	279
161353	279
161354	279
161401	279
161402	279
161403	279
161404	279
161406	279
161407	279
161408	279
161450	279
161451	279
161452	279
161453	279
161454	279
162001	280
162002	280
162003E	280
162004E	280
162006	280
162007	280
162008E	280
16202	329
16202C	329
16203	329
16203C	329
162050	280
162051	280
162052	280
162053E	280
162054E	280
162101	280
162102	280
162103	280
162104	280
162106	280
162107	280
162108E	280
162150	280
162151	280
162152	280
162153	280
162154	280
162201	280
162202	280
162203	280
162204	280
162206	280
162207	280
162208	280
162250	280
162251	280
162252	280
162253	280
162254	280
162301	280
162302	280
162303	280
162304	280
162306	280
162307	280
162308	280
162350	280
162351	280
162352	280
162353	280
162354	280
162401	284
162402	284
162403	284
162404	284
162405	284
162406	284
162407	284
162408	284
162409	284
162410	284
163001	268
163002	268
163003	268
163004	268
163006	268
163007	268
163008	268
16303	328
16303C	328
163051	268
163052	268
163053	268
163054	268
163101	268
163102	268
163103	268
163104	268
163106	268
163107	268
163108	268
16313	328
16313C	328
163151	268
163152	268
163153	268
163154	268
163201	268
163202	268
163203	268
163204	268
163206	268
163207	268
163208	268
16323	328
16323C	328
16324	328
16324C	328
163251	268
163252	268
163253	268
163254	268
163301	285
163302	285
163303	285
163304	285
163305	285
163306	285
163307	285
163308	285
163309	285
163310	285
163311	285
163312	285
163313	285
163314	285
163315	285
163316	285
163317	285
164001	275
164002	275
164003	275
164004	275
164006	275
164007	275
164008	275
16401	329
16401C	329
164050	275
164051	275
164052	275
164053	275
164054	275
164101	275
164102	275
164103	275
164104	275
164106	275
164107	275
164108	275
164150	275
164151	275
164152	275
164153	275
164154	275
164201	275
164202	275
164203	275
164204	275
164206	275
164207	275
164208	275
164250	275
164251	275
164252	275
164253	275
164254	275
164301	275
164302	275
164303	275
164304	275
164306	275
164307	275
164308	275
164350	275
164351	275
164352	275
164353	275
164354	275
165001	276
165002	276
165003	276
165004	276
165006	276
165007	276
165008	276
16501	329
16501C	329
165051	276
165052	276
165053	276
165054	276
165101	276
165102	276
165103	276
165104	276
165106	276
165107	276
165108	276
165151	276
165152	276
165153	276
165154	276
165201	276
165202	276
165203	276
165204	276
165206	276
165207	276
165208	276
165251	276
165252	276
165253	276
165254	276
165301	276
165302	276
165303	276
165304	276
165306	276
165307	276
165308	276
165351	276
165352	276
165353	276
165354	276
16601	343
16602	343
16603	343
16604	343
16700B	325
16700B-30	325
16700B-75	325
16700BC	325
16800B	324
16801B	324
16802B	324
16900B	324
16901B	324
16902B	324
170000	106
17000B	324
17001B	324
17002B	324
17100B	325
17200B	325
17300B	326
17401	295
17401C	295
17402	295
17402C	295
17501	294
17502	294
17601	293
17602	293
17701	307
17701B	307
17701BC	307
17701C	307
17702	307
17702-30	307
17702C	307

Article -Nr.	Page
17801	308
17801B	308
17801BC	308
17801C	308
17802	308
17802C	308
17901	294
17901C	294
17902	294
17902-60	294
17902C	294
18003	310
18003C	310
18103	310
18103C	310
18200BC	338
18204C	338
18210BC	338
18214C	338
18301BC	343
18301C	343
18401C	320
18463	320
18600BC	342
18604C	342
18720BC	340
18724C	340
18730BC	340
18734C	340
18740BC	340
18744C	340
18801	321
18801C	321
18900BC	339
18904C	339
18910BC	339
18914C	339
18920BC	339
18924C	339
18930BC	339
18934C	339
18940BC	339
18944C	339
19101C	320
19200B	326
19320BC	340
19324C	340
19944B-30	309
19945-30	309
19945B-30	309
19946-30	309
19976	309
19980	399
19981	399
19982	399
19999	321
20101	249
20102	249
20103	249
20111	249
20112	249
20113	249
20151	249
20152	249
20153	249
20161	249
20162	249
20163	249
20164	249
20201	350
20202	350
20203	350
20251	350
20252	350
20253	350
20261	350
20262	350
20263	350
20264	350
20301	249
20302	249
20303	249
20311	249
20312	249
20313	249
20351	249
20352	249
20353	249

Article -Nr.	Page
20361	249
20362	249
20363	249
20364	249
20401	350
20402	350
20403	350
20451	350
20452	350
20453	350
20461	350
20462	350
20463	350
20464	350
20701	356
20702	356
20703	356
20704	356
20705	356
20706	356
20707	356
20708	356
20709	356
20712	356
20713	356
20714	356
20719	356
20720	356
20721	356
20722	356
20801	354
20802	354
20803	354
20901	354
20902	354
20903	354
21001	355
21002	355
21003	355
21101	355
21102	355
21103	355
21301	356
21302	356
21303	356
21501	357
21501Y	357
21502	357
21503	357
21503Y	357
21504	357
21505	357
21505Y	357
21506	357
21506Y	357
21507	357
21508	357
21508Y	357
21509	357
21701	357
21702	357
21703	357
21704	357
21705	357
21901	348
21902	348
21903	348
21911	348
21912	348
21913	348
21951	348
21952	348
21953	348
21961	348
21962	348
21963	348
21964	348
22001	348
22002	348
22003	348
22011	348
22012	348
22013	348
22051	348
22052	348
22053	348
22061	348
22062	348

Article -Nr.	Page
22063	348
22064	348
22101	357
22101Y	357
22102	357
22102Y	357
22103	357
22104	357
22104Y	357
22201	351
22202	351
22203	351
22211	351
22212	351
22213	351
22251	351
22252	351
22253	351
22261	351
22262	351
22263	351
22264	351
22301	351
22302	351
22303	351
22311	351
22312	351
22313	351
22351	351
22352	351
22353	351
22361	351
22362	351
22363	351
22364	351
22401	352
22402	352
22403	352
22411	352
22412	352
22413	352
22451	352
22452	352
22453	352
22461	352
22462	352
22463	352
22464	352
22501	352
22502	352
22503	352
22511	352
22512	352
22513	352
22551	352
22552	352
22553	352
22561	352
22562	352
22563	352
22564	352
22601	353
22602	353
22603	353
22651	353
22652	353
22653	353
22661	353
22662	353
22663	353
22664	353
22701	353
22702	353
22703	353
22751	353
22752	353
22753	353
22761	353
22762	353
22763	353
22764	353
22801	191
22802	191
22803	191
2280425B	189
2280425C	190
2280510B	189
2280510C	190

Article -Nr.	Page
2280595B	189
2280595C	190
2280680B	189
2280680C	190
22807	193
2280765B	189
2280765C	190
22808	191
2280850B	189
2280850C	190
22809	191
22811	192
22812	192
22813	192
22814	191
22815	191
22816	191
22817	193
22818	193
22819	193
22861	192
22862	192
23001	358
23101	358
23102	358
23103	358
23104	358
23201	355
23202	355
23203	355
23204	355
23302	356
23303	356
23304	356
23305	356
23307	356
300101	370
300102	370
300201	371
300202	371
300203	371
300301	405
300302	405
30101	361
30102	361
30103	361
30104	361
30105	361
30106	361
30201	361
30202	361
30203	361
30204	361
30205	361
30206	361
30501	362
30502	362
30503	362
30504	362
30505	362
30506	362
30601	362
30602	362
30603	362
30604	362
30605	362
30606	362
30701	363
30702	363
30703	363
30704	363
30705	363
30706	363
30709	363
30710	363
30801	363
30802	363
30803	363
30804	363
30805	363
30806	363
30901	364
30902	364
30903	364
30904	364
30905	364
30906	364
31001	364

Index

Article -Nr.	Page
31002	364
31003	364
31004	364
31005	364
31006	364
31101	365
31102	365
31103	365
31104	365
31105	365
31106	365
31109	365
31110	365
31201	365
31202	365
31203	365
31204	365
31205	365
31206	365
31301	367
31302	367
31303	367
31311	367
31312	367
31313	367
31401	367
31402	367
31403	367
31409	367
31410	367
31411	367
31412	367
31413	367
31414	367
31419	367
31420	367
31421	367
31501	368
31502	368
31601	368
31602	368
31701	369
31702	369
31797	369
31798	369
31799	369
31801	370
31901	370
32001	371
32002	371
32101	372
32201	372
32301	372
32401	373
32501	373
32601	373
32701	373
32702	373
32703	373
32801	374
32802	374
32811	374
32901	374
32902	374
32903	374
32904	374
32911	374
32912	374
32913	374
33001	374
33002	374
33003	374
33004	374
33101	377
33102	377
33103	377
33105	377
33106	377
33107	377
33301	394
33502	383
33504	383
33506	383
33601	375
33701	379
33702	379
33801	379
33802	379
33901	379
33902	379
33903	379
33904	379
34101	376
34102	376
34103	376
34111	376
34112	376
34113	376
34501	378
34502	378
34503	378
34601	382
34602	382
34603	382
34699	382
34701	381
34702	381
34703	381
34751	381
34752	381
34753	381
34801	381
34802	381
34803	381
34851	381
34852	381
34853	381
34901	380
34902	380
34903	380
35001	380
35002	380
35003	380
35101	380
35102	380
35103	380
35151	380
35152	380
35153	380
35201	380
35202	380
35203	380
35251	380
35252	380
35253	380
35301	395
35302	395
35303	395
35401	395
35402	395
35403	395
35501	395
35502	395
35503	395
35601	382
35602	382
35603	382
35701	382
35702	382
35703	382
35800	394
35802	384
35804	384
35806	384
35900	394
35902	385
35904	385
35906	385
36000	394
36002	386
36004	386
36006	386
36012	387
36014	387
36016	387
36100	394
36102	388
36104	388
36106	388
36112	389
36114	389
36116	389
36201	394
36202	394
36203	394
36301	396
36302	396
36303	396
36304	396
36311	398
36312	398
36313	398
36314	398
36399	398
36401	384
36411	390
36421	393
36422	393
36423	393
36501	385
36511	390
36521	393
36522	393
36523	393
36601	386
36601	387
36611	391
36621	392
36622	392
36623	392
36701	388
36701	389
36711	391
36721	392
36722	392
36723	392
36801	400
36801SS	400
36802	400
36802SS	400
36803	400
36803SS	400
36901	400
36901SS	400
36902	400
36902SS	400
36903	400
36903SS	400
37001	401
37002	401
37003	401
37101	401
37102	401
37103	401
37201	402
37202	402
37203	402
37301	402
37302	402
37401	406
37402	406
37403	406
37404	406
37405	406
37406	406
37407	406
37408	406
37501	406
37502	406
37502	406
37508	406
37509	406
37510	406
37511	406
37512	406
37513	406
37601	410
37602	410
37603	410
37611	410
37612	410
37613	410
37621	410
37622	410
37623	410
37701	407
37702	407
37703	407
37801	407
37802	407
37803	407
37901	408
37902	408
37903	408
38001	408
38002	408
38003	408
38101	409
38102	409
38103	409
38104	409
38201	409
38202	409
38203	409
38301	403
38302	403
38401	403
38402	403
38501	404
38601	404
38602	404
38701	412
38702	412
38703	412
38704	412
38705	412
38706	412
38707	412
38708	412
38709	412
38801	412
38802	412
38901	250
38902	250
39001	374
39101	411
39102	411
39103	411
39104	411
39201	375
39202	375
39203	375
39302	375
39401	376
39402	376
39501	394
39601	397
39602	397
39701	405
39702	405
39703	405
39860	366
39861	366
39862	366
39870	366
39871	366
39872	366
40101	414
40102	414
40105	414
40201	414
40202	414
40203	414
40204	414
40205	414
40206	414
40301	415
40302	415
40303	415
40304	415
40305	415
40306	415
40401	415
40402	415
40405	415
40701	416
40702	416
40801	416
40901	417
41001	418
41002	418
41101	418
41102	418
41301	421
41302	421
41303	421
41401	422
41402	422
41501	424
41502	424
41503	424
41504	424

Article -Nr.	Page
41505	424
41506	424
41507	424
41508	424
41509	424
41510	424
41511	424
41512	424
41513	424
41514	424
41515	424
41516	424
41517	424
41518	424
41519	424
41520	424
41521	424
41522	424
41523	424
41524	424
41525	424
41526	424
41527	424
41528	424
41529	424
41530	424
41531	424
41532	424
41533	424
41534	424
41535	424
41536	424
41537	424
41538	424
41539	424
41540	424
41541	424
41542	424
41543	424
41544	424
41545	424
41546	424
41547	424
41548	424
41549	424
41550	424
41551	424
41552	424
41553	424
41554	424
41555	424
41556	424
41557	424
41558	424
41559	424
41560	424
41561	424
41562	424
41563	424
41564	424
41565	424
41566	424
41567	424
41568	424
41569	424
41570	424
41571	424
41572	424
41573	424
41574	424
41575	424
41576	424
41577	424
41578	424
41579	424
41580	424
41581	424
41582	424
41583	424
41584	424
41585	424
41586	424
41587	424
41588	424
41589	424
41590	424
41591	424
41592	424
41593	424
41601	425
41602	425
41603	425
41604	425
41605	425
41606	425
41607	425
41608	425
41609	425
41610	425
41611	425
41612	425
41613	425
41614	425
41615	425
41616	425
41617	425
41618	425
41619	425
41620	425
41621	425
41622	425
41623	425
41624	425
41625	425
41626	425
41627	425
41628	425
41629	425
41630	425
41631	425
41632	425
41633	425
41634	425
41635	425
41636	425
41637	425
41638	425
41639	425
41640	425
41641	425
41642	425
41643	425
41644	425
41645	425
41646	425
41647	425
41648	425
41649	425
41650	425
41651	425
41652	425
41653	425
41654	425
41655	425
41656	425
41657	425
41658	425
41659	425
41660	425
41661	425
41662	425
41663	425
41664	425
41665	425
41666	425
41667	425
41668	425
41669	425
41670	425
41671	425
41672	425
41673	425
41674	425
41675	425
41676	425
41677	425
41678	425
41679	425
41680	425
41681	425
41682	425
41683	425
41684	425
41685	425
41686	425
41687	425
41688	425
41689	425
41690	425
41701	421
41702	421
41801	427
41802	427
41803	427
41804	427
41805	427
41806	427
41807	427
41808	427
41901	423
41902	423
41903	423
41904	423
41905	423
41906	423
41907	423
41908	423
41913	423
41914	423
41915	423
41916	423
42001	423
42002	423
42003	423
42004	423
42005	423
42006	423
42015	423
42016	423
42101	428
42102	428
42103	428
42104	428
42105	428
42106	428
42201	428
42301	428
42401	428
42501	420
42511	420
42521	420
42601	419
42701	420
42702	420
42801	426
42802	426
42803	426
42804	426
42805	426
42806	426
42807	426
42808	426
42901	426
42902	426
43001	426
43002	426
43201	419
49995	417
50101	82
50102	82
50103	82
50104	82
50150	82
50151	82
50152	82
50153	82
50154	82
50201	82
50202	82
50203	82
50204	82
50250	82
50251	82
50252	82
50253	82
50254	82
50301	82
50301G	97
50302	82
50302G	97
50303	82
50303G	97
50304	82
50304G	97
50350	82
50351	82
50352	82
50353	82
50354	82
50401	82
50401G	97
50402	82
50402G	97
50403	82
50403G	97
50404	82
50404G	97
50450	82
50451	82
50452	82
50453	82
50454	82
50501	82
50501G	97
50502	82
50502G	97
50503	82
50503G	97
50504	82
50504G	97
50550	82
50551	82
50552	82
50553	82
50554	82
50601	82
50602	82
50603	82
50604	82
50650	82
50651	82
50652	82
50653	82
50654	82
50701	82
50702	82
50703	82
50704	82
50750	82
50751	82
50752	82
50753	82
50754	82
50801	83
50802	83
50803	83
50804	83
50851	83
50852	83
50853	83
50854	83
50901	83
50902	83
50903	83
50904	83
50951	83
50952	83
50953	83
50954	83
51001	83
51002	83
51003	83
51004	83
51051	83
51052	83
51053	83
51054	83
51101	84
51102	84
51103	84
51104	84
51150	84
51151	84
51152	84
51153	84
51154	84
51201	84
51202	84
51203	84
51204	84
51250	84
51251	84

Index

Article -Nr.	Page
51252	84
51253	84
51254	84
51301	84
51302	84
51303	84
51304	84
51350	84
51351	84
51352	84
51353	84
51354	84
51401	84
51402	84
51403	84
51404	84
51450	84
51451	84
51452	84
51453	84
51454	84
51501	84
51502	84
51503	84
51504	84
51550	84
51551	84
51552	84
51553	84
51554	84
51601	84
51602	84
51603	84
51604	84
51650	84
51651	84
51652	84
51653	84
51654	84
51701	84
51702	84
51703	84
51704	84
51750	84
51751	84
51752	84
51753	84
51754	84
51801	85
51802	85
51803	85
51804	85
51851	85
51852	85
51853	85
51854	85
51901	85
51902	85
51903	85
51904	85
51951	85
51952	85
51953	85
51954	85
52001	85
52002	85
52003	85
52004	85
5201 Series	178
5202 Series	181
5203 Series	182
5204 Series	183
52051	85
52052	85
52053	85
52054	85
5206 Series	180
5207 Series	184
52101	86
52102	86
52103	86
52104	86
5211 Series	179
52150	86
52151	86
52152	86
52153	86
52154	86
52201	86
52202	86
52203	86
52204	86
5221 Series	212/213
5222 Series	215/216
5223 Series	217
5225 Series	218
52250	86
52251	86
52252	86
52253	86
52254	86
5226 Series	214
5227 Series	219
5228 Series	220
52301	86
52301G	98
52302	86
52302G	98
52303	86
52303G	98
52304	86
52304G	98
5231 Series	222
5233 Series	224
5234 Series	226
5235 Series	225
52350	86
52351	86
52352	86
52353	86
52354	86
5236 Series	223
5237 Series	228
52401	86
52401G	98
52402	86
52402G	98
52403	86
52403G	98
52404	86
52404G	98
52450	86
52451	86
52452	86
52453	86
52454	86
52501	86
52501G	98
52502	86
52502G	98
52503	86
52503G	98
52504	86
52504G	98
52550	86
52551	86
52552	86
52553	86
52554	86
5256 Series	201
52601	86
52602	86
52603	86
52604	86
5261 Series	199/200
5262 Series	202
5263 Series	203
5265 Series	204
52650	86
52651	86
52652	86
52653	86
52654	86
52701	86
52702	86
52703	86
52704	86
52750	86
52751	86
52752	86
52753	86
52754	86
52801	87
52802	87
52803	87
52804	87
52850	87
52851	87
52852	87
52853	87
52854	87
52901	87
52902	87
52903	87
52904	87
52950	87
52951	87
52952	87
52953	87
52954	87
53001	87
53001G	97
53002	87
53002G	97
53003	87
53003G	97
53004	87
53004G	97
5301 Series	195/196
53050	87
53051	87
53052	87
53053	87
53054	87
5306 Series	197
53101	87
53101G	97
53102	87
53102G	97
53103	87
53103G	97
53104	87
53104G	97
5311 Series	187
53150	87
53151	87
53152	87
53153	87
53154	87
53201	87
53201G	97
53202	87
53202G	97
53203	87
53203G	97
53204	87
53204G	97
5321 Series	206
5323 Series	208
5324 Series	210
5325 Series	209
53250	87
53251	87
53252	87
53253	87
53254	87
5326 Series	207
53301	87
53302	87
53303	87
53304	87
5331 Series	176
53350	87
53351	87
53352	87
53353	87
53354	87
53401	87
53402	87
53403	87
53404	87
5341 Series	230/231
5342 Series	233/234
5343 Series	235
5345 Series	236
53450	87
53451	87
53452	87
53453	87
53454	87
5346 Series	232
53501	88
53501	90
53502	88
53502	90
53503	88
53503	90
53504	88
53504	90
53550	88
53550	90
53551	88
53551	90
53552	88
53552	90
53553	88
53553	90
53554	88
53554	90
53601	88
53601	90
53602	88
53602	90
53603	88
53603	90
53604	88
53604	90
53650	88
53650	90
53651	88
53651	90
53652	88
53652	90
53653	88
53653	90
53654	88
53654	90
53701	88
53701	90
53701G	98
53702	88
53702	90
53702G	98
53703	88
53703	90
53703G	98
53704	88
53704	90
53704G	98
53750	88
53750	90
53751	88
53751	90
53752	88
53752	90
53753	88
53753	90
53754	88
53754	90
53801	88
53801	90
53801G	98
53802	88
53802	90
53802G	98
53803	88
53803	90
53803G	98
53804	88
53804	90
53804G	98
53850	88
53850	90
53851	88
53851	90
53852	88
53852	90
53853	88
53853	90
53854	88
53854	90
53901	88
53901	90
53901G	98
53902	88
53902	90
53902G	98
53903	88
53903	90
53903G	98
53904	88
53904	90

Article -Nr.	Page
53904G	98
53950	88
53950	90
53951	88
53951	90
53952	88
53952	90
53953	88
53953	90
53954	88
53954	90
54001	88
54001	90
54002	88
54002	90
54003	88
54003	90
54004	88
54004	90
54050	88
54050	90
54051	88
54051	90
54052	88
54052	90
54053	88
54053	90
54054	88
54054	90
54101	88
54101	90
54102	88
54102	90
54103	88
54103	90
54104	88
54104	90
54150	88
54150	90
54151	88
54151	90
54152	88
54152	90
54153	88
54153	90
54154	88
54154	90
54201	89
54201-2L	91
54202	89
54202-2L	91
54203	89
54203-2L	91
54204	89
54204-2L	91
5421 Series	241
5422 Series	242/243
5423 Series	244
5424 Series	245/246
54251	89
54251-2L	91
54252	89
54252-2L	91
54253	89
54253-2L	91
54254	89
54254-2L	91
54301	89
54301-2L	91
54302	89
54302-2L	91
54303	89
54303-2L	91
54304	89
54304-2L	91
5431 Series	238
5433 Series	239
54351	89
54351-2L	91
54352	89
54352-2L	91
54353	89
54353-2L	91
54354	89
54354-2L	91
54401	89
54401-2L	91
54402	89
54402-2L	91
54403	89
54403-2L	91
54404	89
54404-2L	91
54451	89
54451-2L	91
54452	89
54452-2L	91
54453	89
54453-2L	91
54454	89
54454-2L	91
54501	92
54502	92
54503	92
54504	92
5451010201A	252
5451010201A-CD	257
5451010201A-CS	257
5451010202A	252
5451010202A-CD	257
5451010202A-CS	257
5451010203A	252
5451010203A-CD	257
5451010203A-CS	257
5451010204A	252
5451010204A-CD	257
5451010204A-CS	257
5451010205A	252
5451010205A-CD	257
5451010205A-CS	257
5451010401A	252
5451010401A-CD	257
5451010401A-CS	257
5451010402A	252
5451010402A-CD	257
5451010402A-CS	257
5451010403A	252
5451010403A-CD	257
5451010403A-CS	257
5451010404A	252
5451010404A-CD	257
5451010404A-CS	257
5451010601A	252
5451010601A-CD	257
5451010601A-CS	257
5451010602A	252
5451010602A-CD	257
5451010602A-CS	257
5451010603A	252
5451010603A-CD	257
5451010603A-CS	257
5451010801A	252
5451010801A-CD	257
5451010801A-CS	257
5451010802A	252
5451010802A-CD	257
5451010802A-CS	257
5451011001A	252
5451011001A-CD	257
5451011001A-CS	257
5452010201A	252
5452010201A-CD	257
5452010201A-CS	257
5452010202A	252
5452010202A-CD	257
5452010202A-CS	257
5452010203A	252
5452010203A-CD	257
5452010203A-CS	257
5452010204A	252
5452010204A-CD	257
5452010204A-CS	257
5452010205A	252
5452010205A-CD	257
5452010205A-CS	257
5452010401A	252
5452010401A-CD	257
5452010401A-CS	257
5452010402A	252
5452010402A-CD	257
5452010402A-CS	257
5452010403A	252
5452010403A-CD	257
5452010403A-CS	257
5452010404A	252
5452010404A-CD	257
5452010404A-CS	257
5452010601A	252
5452010601A-CD	257
5452010601A-CS	257
5452010602A	252
5452010602A-CD	257
5452010602A-CS	257
5452010603A	252
5452010603A-CD	257
5452010603A-CS	257
5452010801A	252
5452010801A-CD	257
5452010801A-CS	257
5452010802A	252
5452010802A-CD	257
5452010802A-CS	257
5452011001A	252
5452011001A-CD	257
5452011001A-CS	257
54550	92
54551	92
54552	92
54553	92
54554	92
54601	92
54602	92
54603	92
54604	92
5461280419A-M	254
5461280419B-M	255
5461280439A-M	254
5461280439A-M	254
5461280439B-M	255
5461280439B-M	255
5461280504A-M	254
5461280504B-M	255
5461280524A-M	254
5461280524A-M	254
5461280524B-M	255
5461280524B-M	255
5461280864A-M	254
5461280864B-M	255
5461281034A-M	254
5461281034B-M	255
5462280249A-M	254
5462280249B-M	255
5462280269A-M	254
5462280269A-M	254
5462280269B-M	255
5462280269B-M	255
5462280419A-M	254
5462280419B-M	255
5462280439A-M	254
5462280439A-M	254
5462280439B-M	255
5462280439B-M	255
5462280504A-M	254
5462280504B-M	255
5462280524A-M	254
5462280524A-M	254
5462280524B-M	255
5462280524B-M	255
5462280864A-M	254
5462280864B-M	255
5462281034A-M	254
5462281034B-M	255
5463280249A-M	254
5463280249B-M	255
5463280269A-M	254
5463280269A-M	254
5463280269B-M	255
5463280269B-M	255
5463280419A-M	254
5463280419B-M	255
5463280439A-M	254
5463280439A-M	254
5463280439B-M	255
5463280439B-M	255
5463280504A-M	254
5463280504B-M	255
5463280524A-M	254
5463280524A-M	254
5463280524B-M	255
5463280524B-M	255
5463280864A-M	254
5463280864B-M	255
5463281034A-M	254
5463281034B-M	255
5464280419A-M	254
5464280419A-M	254
5464280419B-M	255
5464280419B-M	255
5464280504A-M	254
5464280504A-M	254
5464280504B-M	255
5464280504B-M	255
54650	92
54651	92
54652	92
5465280249A-M	254
5465280249A-M	254
5465280249B-M	255
5465280249B-M	255
5465280419A-M	254
5465280419A-M	254
5465280419B-M	255
5465280419B-M	255
5465280504A-M	254
5465280504A-M	254
5465280504B-M	255
5465280504B-M	255
54653	92
54654	92
5466280249A-M	254
5466280249A-M	254
5466280249B-M	255
5466280249B-M	255
5466280419A-M	254
5466280419A-M	254
5466280419B-M	255
5466280419B-M	255
5466280504A-M	254
5466280504A-M	254
5466280504B-M	255
5466280504B-M	255
54701	92
54702	92
54703	92
54704	92
54750	92
54751	92
54752	92
54753	92
54754	92
54801	92
54802	92
54803	92
54804	92
54850	92
54851	92
54852	92
54853	92
54854	92
54901	93
54902	93
54903	93
54904	93
54951	93
54952	93
54953	93
54954	93
55001	93
55002	93
55003	93
55004	93
55051	93
55052	93
55053	93
55054	93
55101	94
55102	94
55103	94
55104	94
55150	94
55151	94
55152	94
55153	94
55154	94
55201	94
55202	94
55203	94
55204	94
55250	94
55251	94
55252	94
55253	94

Index

Article -Nr.	Page
55254	94
55301	94
55302	94
55303	94
55304	94
55350	94
55351	94
55352	94
55353	94
55354	94
55401	94
55402	94
55403	94
55404	94
55450	94
55451	94
55452	94
55453	94
55454	94
55501	95
55502	95
55503	95
55504	95
55551	95
55552	95
55553	95
55554	95
55601	95
55602	95
55603	95
55604	95
55651	95
55652	95
55653	95
55654	95
55701	96
55702	96
55703	96
55704	96
55750	96
55751	96
55752	96
55753	96
55754	96
55801	96
55802	96
55803	96
55804	96
55850	96
55851	96
55852	96
55853	96
55854	96
55901	96
55902	96
55903	96
55904	96
55950	96
55951	96
55952	96
55953	96
55954	96
56001	96
56002	96
56003	96
56004	96
56050	96
56051	96
56052	96
56053	96
56054	96
56101	96
56102	96
56103	96
56104	96
56150	96
56151	96
56152	96
56153	96
56154	96
56201	96
56202	96
56203	96
56204	96
56250	96
56251	96
56252	96
56253	96
56254	96
56301	96
56302	96
56303	96
56304	96
56350	96
56351	96
56352	96
56353	96
56354	96
56401	96
56402	96
56403	96
56404	96
56450	96
56451	96
56452	96
56453	96
56454	96
56550	101
56650	101
56750	101
56850	101
57050E	101
57150E	101
57250E	101
57301	102
57302	102
57303	102
57304	102
57350	102
57351	102
57352	102
57353	102
57354	102
57401	102
57402	102
57403	102
57404	102
57450	102
57451	102
57452	102
57453	102
57454	102
57501	102
57502	102
57503	102
57504	102
57550	102
57551	102
57552	102
57553	102
57554	102
57601G	99
57602G	99
57603G	99
57604G	99
58001	100
58002	100
58003	100
58004	100
58050	100
58051	100
58052	100
58053	100
58054	100
58101	100
58102	100
58103	100
58104	100
58150	100
58151	100
58152	100
58153	100
58154	100
58201	100
58202	100
58203	100
58204	100
58250	100
58251	100
58252	100
58253	100
58254	100
58301	100
58302	100
58303	100
58304	100
58350	100
58351	100
58352	100
58353	100
58354	100
58600	103
58701	103
58801	104
58802	104
58803	104
58804	104
58850	104
58851	104
58852	104
58853	104
58854	104
58901	104
58902	104
58903	104
58904	104
58950	104
58951	104
58952	104
58953	104
58954	104
59001	105
59002	105
59003	105
59004	105
59050	105
59051	105
59052	105
59053	105
59054	105
59101	105
59102	105
59103	105
59104	105
59150	105
59151	105
59152	105
59153	105
59154	105
60100	108
60101	108
60102	108
60103	108
60104	108
60200	108
60201	108
60202	108
60203	108
60204	108
60300	108
60301	108
60302	108
60303	108
60304	108
60400	108
60401	108
60402	108
60403	108
60404	108
60500	108
60501	108
60502	108
60503	108
60504	108
60600	108
60601	108
60602	108
60603	108
60604	108
60700	108
60701	108
60702	108
60703	108
60704	108
60801	108
60802	108
60803	108
60804	108
60901	108
60902	108
60903	108
60904	108
61001	108
61002	108
61003	108
61004	108
61100	109
61101	109
61102	109
61103	109
61104	109
61200	109
61201	109
61202	109
61203	109
61204	109
61300	109
61301	109
61302	109
61303	109
61304	109
61400	109
61401	109
61402	109
61403	109
61404	109
61500	109
61501	109
61502	109
61503	109
61504	109
61600	109
61601	109
61602	109
61603	109
61604	109
61700	109
61701	109
61702	109
61703	109
61704	109
61800	110
61801	110
61802	110
61803	110
61804	110
61900	110
61901	110
61902	110
61903	110
61904	110
62000	110
62001	110
62002	110
62003	110
62004	110
62100	110
62101	110
62102	110
62103	110
62104	110
62200	110
62201	110
62202	110
62203	110
62204	110
62300	110
62301	110
62302	110
62303	110
62304	110
62400	110
62401	110
62402	110
62403	110
62404	110
62500	109
62501	109
62502	109
62503	109
62504	109
62600	109
62601	109
62602	109
62603	109
62604	109
62700	109
62701	109
62702	109
62703	109
62704	109
62800	109

Article -Nr.	Page
62801	109
62802	109
62803	109
62804	109
62900	110
62901	110
62902	110
62903	110
62904	110
63000	110
63001	110
63002	110
63003	110
63004	110
63100	110
63101	110
63102	110
63103	110
63104	110
63200	110
63201	110
63202	110
63203	110
63204	110
63300	110
63301	110
63302	110
63303	110
63304	110
63400	110
63401	110
63402	110
63403	110
63404	110
63500	110
63501	110
63502	110
63503	110
63504	110
70111110	117
70111114	116
70111120	117
70111124	116
70111130	117
70111134	116
70111140	117
70111144	116
70111150	117
70111154	116
70111160	117
70111164	116
70111170	117
70111174	116
70111180	117
70111184	116
70111210	117
70111214	116
70111220	117
70111224	116
70111230	117
70111234	116
70111240	117
70111244	116
70111250	117
70111254	116
70111260	117
70111264	116
70111270	117
70111274	116
70111280	117
70111284	116
70111310	117
70111314	116
70111320	117
70111324	116
70111330	117
70111334	116
70111340	117
70111344	116
70111350	117
70111354	116
70111360	117
70111364	116
70111370	117
70111374	116
70111380	117
70111384	116
70111410	117
70111414	116
70111420	117
70111424	116
70111430	117
70111434	116
70111440	117
70111444	116
70111450	117
70111454	116
70111460	117
70111464	116
70111470	117
70111474	116
70111480	117
70111484	116
70111510	117
70111514	116
70111520	117
70111524	116
70111530	117
70111534	116
70111540	117
70111544	116
70111550	117
70111554	116
70111560	117
70111564	116
70111570	117
70111574	116
70111580	117
70111584	116
70111610	117
70111614	116
70111620	117
70111624	116
70111630	117
70111634	116
70111640	117
70111644	116
70111650	117
70111654	116
70111660	117
70111664	116
70111670	117
70111674	116
70111680	117
70111684	116
70216614	122
70216624	122
70216634	122
70216644	122
70216654	122
70216664	122
70216674	122
70216684	122
70315114	121
70315214	121
70315314	121
70315414	121
70315514	121
70315614	121
70318115	121
70318215	121
70318315	121
70318415	121
70318515	121
70318615	121
70319110	121
70319210	121
70319310	121
70319410	121
70319510	121
70319610	121
70413615	127
70413625	127
70413635	127
70413645	127
70413655	127
70511610	141
70511620	141
70511630	141
70511640	141
70511650	141
70511660	141
70511670	141
70511680	141
70611610	148
70611614	149
70611620	148
70611624	149
70611630	148
70611634	149
70611640	148
70611644	149
70611650	148
70611654	149
70611660	148
70611664	149
70611670	148
70611674	149
70611680	148
70611684	149
70616614	151
70616624	151
70616634	151
70616644	151
70616654	151
70616664	151
70616674	151
70616684	151
70619610	152
70619620	152
70619630	152
70619640	152
70619650	152
70619660	152
70619670	152
70619680	152
70716610	130
70718610	130
70719610	130
70818610	133
70818620	133
70818630	133
70918610	135
70919610	135
71018610	136
71019610	136
71111114	118
71111124	118
71111134	118
71111144	118
71111154	118
71111164	118
71111174	118
71111184	118
71111214	118
71111224	118
71111234	118
71111244	118
71111254	118
71111264	118
71111274	118
71111284	118
71111314	118
71111324	118
71111334	118
71111344	118
71111354	118
71111364	118
71111374	118
71111384	118
71111414	118
71111424	118
71111434	118
71111444	118
71111454	118
71111464	118
71111474	118
71111484	118
71111514	118
71111524	118
71111534	118
71111544	118
71111554	118
71111564	118
71111574	118
71111584	118
71111614	118
71111624	118
71111634	118
71111644	118
71111654	118
71111664	118
71111674	118
71111684	118
71211114	119
71211124	119
71211134	119
71211144	119
71211154	119
71211164	119
71211174	119
71211184	119
71211214	119
71211224	119
71211234	119
71211244	119
71211254	119
71211264	119
71211274	119
71211284	119
71211314	119
71211324	119
71211334	119
71211344	119
71211354	119
71211364	119
71211374	119
71211384	119
71211414	119
71211424	119
71211434	119
71211444	119
71211454	119
71211464	119
71211474	119
71211484	119
71211514	119
71211524	119
71211534	119
71211544	119
71211554	119
71211564	119
71211574	119
71211584	119
71211610RSPRO	115
71211614	119
71211624	119
71211634	119
71211644	119
71211654	119
71211664	119
71211674	119
71211684	119
71219614	125
71219624	125
71219634	125
71219644	125
71219654	125
71219664	125
71219674	125
71219684	125
71316614	123
71316624	123
71316634	123
71316644	123
71316654	123
71316664	123
71316674	123
71316684	123
71416614	124
71416624	124
71416634	124
71416644	124
71416654	124
71416664	124
71416674	124
71416684	124
71511615	126
71511625	126
71511635	126
71511645	126
71511655	126
71613615	129
71613625	129
71613635	129
71713614	131
71713624	131
71713634	131
71713644	131
71816614	132
71816624	132
71816634	132

Index

Article -Nr.	Page
71919614	134
71919624	134
71919634	134
72021612	163
72021622	163
72021632	163
72021642	163
72021652	163
72021662	163
72023612	163
72023622	163
72023632	163
72023642	163
72023652	163
72023662	163
72027612	163
72027622	163
72027632	163
72027642	163
72027652	163
72027662	163
72029612	163
72029622	163
72029632	163
72029642	163
72029652	163
72029662	163
72121612	163
72121622	163
72121632	163
72121642	163
72121652	163
72121662	163
72123612	163
72123622	163
72123632	163
72123642	163
72123652	163
72123662	163
72127612	163
72127622	163
72127632	163
72127642	163
72127652	163
72127662	163
72129612	163
72129622	163
72129632	163
72129642	163
72129652	163
72129662	163
72221612	163
72221622	163
72221632	163
72221642	163
72223612	163
72223622	163
72223632	163
72223642	163
72227612	163
72227622	163
72227632	163
72227642	163
72229612	163
72229622	163
72229632	163
72229642	163
72323612	164
72323622	164
72323632	164
72323642	164
72327612	164
72327622	164
72327632	164
72327642	164
72329612	164
72329622	164
72329632	164
72329642	164
72423612	164
72423622	164
72423632	164
72423642	164
72427612	164
72427622	164
72427632	164
72427642	164
72429612	164
72429622	164
72429632	164
72429642	164
72523612	164
72523622	164
72523632	164
72523642	164
72527612	164
72527622	164
72527632	164
72527642	164
72529612	164
72529622	164
72529632	164
72529642	164
72621612	165
72621622	165
72621632	165
72621642	165
72623612	165
72623622	165
72623632	165
72623642	165
72627612	165
72627622	165
72627632	165
72627642	165
72629612	165
72629622	165
72629632	165
72629642	165
72723612	164
72723622	164
72723632	164
72723642	164
72727612	164
72727622	164
72727632	164
72727642	164
72729612	164
72729622	164
72729632	164
72729642	164
72821612	165
72821622	165
72821632	165
72821642	165
72823612	165
72823622	165
72823632	165
72823642	165
72827612	165
72827622	165
72827632	165
72827642	165
72829612	165
72829622	165
72829632	165
72829642	165
72921612	165
72921622	165
72921632	165
72921642	165
72923612	165
72923622	165
72923632	165
72923642	165
72927612	165
72927622	165
72927632	165
72927642	165
72929612	165
72929622	165
72929632	165
72929642	165
73011115	120
73011125	120
73011135	120
73011145	120
73011155	120
73011165	120
73011175	120
73011185	120
73011215	120
73011225	120
73011235	120
73011245	120
73011255	120
73011265	120
73011275	120
73011285	120
73011315	120
73011325	120
73011335	120
73011345	120
73011355	120
73011365	120
73011375	120
73011385	120
73011415	120
73011425	120
73011435	120
73011445	120
73011455	120
73011465	120
73011475	120
73011485	120
73011515	120
73011525	120
73011535	120
73011545	120
73011555	120
73011565	120
73011575	120
73011585	120
73011615	120
73011625	120
73011635	120
73011645	120
73011655	120
73011665	120
73011675	120
73011685	120
73113610	128
73113620	128
73113630	128
73113640	128
73113650	128
73113660	128
73113670	128
73113680	128
73211114	142
73211124	142
73211134	142
73211144	142
73211154	142
73211164	142
73211174	142
73211184	142
73211214	142
73211224	142
73211234	142
73211244	142
73211254	142
73211264	142
73211274	142
73211284	142
73211314	142
73211324	142
73211334	142
73211344	142
73211354	142
73211364	142
73211374	142
73211384	142
73211414	142
73211424	142
73211434	142
73211444	142
73211454	142
73211464	142
73211474	142
73211484	142
73211514	142
73211524	142
73211534	142
73211544	142
73211554	142
73211564	142
73211574	142
73211584	142
73211614	142
73211624	142
73211634	142
73211644	142
73211654	142
73211664	142
73211674	142
73211684	142
73216614	144
73216624	144
73216634	144
73216644	144
73216654	144
73216664	144
73216674	144
73216684	144
73219610	145
73219620	145
73219630	145
73219640	145
73219650	145
73219660	145
73219670	145
73219680	145
73311114	143
73311124	143
73311134	143
73311144	143
73311154	143
73311164	143
73311174	143
73311184	143
73311214	143
73311224	143
73311234	143
73311244	143
73311254	143
73311264	143
73311274	143
73311284	143
73311314	143
73311324	143
73311334	143
73311344	143
73311354	143
73311364	143
73311374	143
73311384	143
73311414	143
73311424	143
73311434	143
73311444	143
73311454	143
73311464	143
73311474	143
73311484	143
73311514	143
73311524	143
73311534	143
73311544	143
73311554	143
73311564	143
73311574	143
73311584	143
73311614	143
73311624	143
73311634	143
73311644	143
73311654	143
73311664	143
73311674	143
73311684	143
73411614	146
73411624	146
73411634	146
73411644	146
73413614	147
73413624	147
73413634	147
73413644	147
73511614	150
73511624	150
73511634	150
73511644	150
73511654	150
73511664	150
73511674	150
73511684	150
73611614	153
73611624	153
73611634	153
73611644	153
73613614	154

Article -Nr.	Page
73613624	154
73613634	154
73613644	154
73721612	165
73721622	165
73721632	165
73721642	165
73723612	165
73723622	165
73723632	165
73723642	165
73727612	165
73727622	165
73727632	165
73727642	165
73729612	165
73729622	165
73729632	165
73729642	165
73821612	165
73821622	165
73823612	165
73823622	165
73827612	165
73827622	165
73829612	165
73829622	165
73921612	165
73921622	165
73923612	165
73923622	165
73927612	165
73927622	165
73929612	165
73929622	165
74020612	166
74021612	166
74120612	166
74121612	166
74220612	167
74221612	167
75011110	155
75011114	156
75011120	155
75011124	156
75011130	155
75011134	156
75011140	155
75011144	156
75011150	155
75011154	156
75011160	155
75011164	156
75011170	155
75011174	156
75011180	155
75011184	156
75011210	155
75011214	156
75011220	155
75011224	156
75011230	155
75011234	156
75011240	155
75011244	156
75011250	155
75011254	156
75011260	155
75011264	156
75011270	155
75011274	156
75011280	155
75011284	156
75011310	155
75011314	156
75011320	155
75011324	156
75011330	155
75011334	156
75011340	155
75011344	156
75011350	155
75011354	156
75011360	155
75011364	156
75011370	155
75011374	156
75011380	155

Article -Nr.	Page
75011384	156
75011410	155
75011414	156
75011420	155
75011424	156
75011430	155
75011434	156
75011440	155
75011444	156
75011450	155
75011454	156
75011460	155
75011464	156
75011470	155
75011474	156
75011480	155
75011484	156
75011510	155
75011514	156
75011520	155
75011524	156
75011530	155
75011534	156
75011540	155
75011544	156
75011550	155
75011554	156
75011560	155
75011564	156
75011570	155
75011574	156
75011580	155
75011584	156
75011610	155
75011614	156
75011620	155
75011624	156
75011630	155
75011634	156
75011640	155
75011644	156
75011650	155
75011654	156
75011660	155
75011664	156
75011670	155
75011674	156
75011680	155
75011684	156
75016614	158
75016624	158
75016634	158
75016644	158
75016654	158
75016664	158
75016674	158
75016684	158
75019610	161
75019620	161
75019630	161
75019640	161
75019650	161
75019660	161
75019670	161
75019680	161
75111114	157
75111124	157
75111134	157
75111144	157
75111154	157
75111164	157
75111174	157
75111184	157
75111214	157
75111224	157
75111234	157
75111244	157
75111254	157
75111264	157
75111274	157
75111284	157
75111314	157
75111324	157
75111334	157
75111344	157
75111354	157
75111364	157
75111374	157

Article -Nr.	Page
75111384	157
75111414	157
75111424	157
75111434	157
75111444	157
75111454	157
75111464	157
75111474	157
75111484	157
75111514	157
75111524	157
75111534	157
75111544	157
75111554	157
75111564	157
75111574	157
75111584	157
75111614	157
75111624	157
75111634	157
75111644	157
75111654	157
75111664	157
75111674	157
75111684	157
75116614	159
75116624	159
75116634	159
75116644	159
75116654	159
75116664	159
75116674	159
75116684	159
75119614	160
75119624	160
75119634	160
75119644	160
75119654	160
75119664	160
75119674	160
75119684	160
75211614	162
75211624	162
75211634	162
75211644	162
75211654	162
75211664	162
75211674	162
75211684	162
77031612	168
77031622	168
77031632	168
77031642	168
77031652	168
77031662	168
77033612	168
77033622	168
77033632	168
77033642	168
77033652	168
77033662	168
77037612	168
77037622	168
77037632	168
77037642	168
77037652	168
77037662	168
77039612	168
77039622	168
77039632	168
77039642	168
77039652	168
77039662	168
78118610	137
78218610	139
78318610	140
78319610	140
78418210	138
78418210	138
78418310	138
78418410	138
78418510	138
78418610	138
78419110	138
78419210	138
78419310	138
78419410	138
78419510	138

Article -Nr.	Page
78419610	138
79023010	169
79024010	169
79026010	169
79124010	169
79126010	169
79127010	169
79128010	169
79223010	170
79224010	170
79225010	170
79226010	170
79227010	170
79228010	170
79321010	170
79322010	170
79420010	171
80100	431
80100SS	431
80101	431
80101SS	431
80102	431
80102SS	431
80103	431
80103SS	431
80104	431
80104SS	431
80110	431
80110SS	431
80111	431
80111SS	431
80112	431
80112SS	431
80113	431
80113SS	431
80114	431
80114SS	431
80121	431
80121SS	431
80122	431
80122SS	431
80132	431
80132SS	431
80200	431
80201	431
80202	431
80203	431
80204	431
80210	431
80211	431
80212	431
80213	431
80214	431
80221	431
80222	431
80232	431
80300	434
80300L	434
80300SS	434
80301	434
80301L	434
80301SS	434
80302	434
80302L	434
80302SS	434
80303	434
80303L	434
80303SS	434
80304	434
80304L	434
80304SS	434
80310	434
80310L	434
80310SS	434
80311	434
80311L	434
80311SS	434
80312	434
80312L	434
80312SS	434
80313	434
80313L	434
80313SS	434
80314	434
80314L	434
80314SS	434
80321	434
80321L	434

Index

Article -Nr.	Page
80321SS	434
80322	434
80322L	434
80322SS	434
80332	434
80332L	434
80332SS	434
80400	434
80400L	434
80400SS	434
80401	434
80401L	434
80401SS	434
80402	434
80402L	434
80402SS	434
80403	434
80403L	434
80403SS	434
80404	434
80404L	434
80404SS	434
80410	434
80410L	434
80410SS	434
80411	434
80411L	434
80411SS	434
80412	434
80412L	434
80412SS	434
80413	434
80413L	434
80413SS	434
80414	434
80414L	434
80414SS	434
80421	434
80421L	434
80421SS	434
80422	434
80422L	434
80422SS	434
80432	434
80432L	434
80432SS	434
80500	434
80501	434
80502	434
80503	434
80504	434
80510	434
80511	434
80512	434
80513	434
80514	434
80521	434
80522	434
80532	434
80600	434
80601	434
80602	434
80603	434
80604	434
80610	434
80611	434
80612	434
80613	434
80614	434
80621	434
80622	434
80632	434
80701	437
80701SS	437
80702	437
80702SS	437
80703	437
80703SS	437
80704	437
80704SS	437
80713	437
80713SS	437
80714	437
80714SS	437
80801	437
80802	437
80803	437
80804	437
80813	437
80814	437
80901	440
80901L	440
80901SS	440
80902	440
80902L	440
80902SS	440
80903	440
80903L	440
80903SS	440
80904	440
80904L	440
80904SS	440
80913	440
80913L	440
80913SS	440
80914	440
80914L	440
80914SS	440
81001	440
81001L	440
81001SS	440
81002	440
81002L	440
81002SS	440
81003	440
81003L	440
81003SS	440
81004	440
81004L	440
81004SS	440
81013	440
81013L	440
81013SS	440
81014	440
81014L	440
81014SS	440
81101	440
81102	440
81103	440
81104	440
81113	440
81114	440
81201	440
81202	440
81203	440
81204	440
81213	440
81214	440
81300	451
81301	451
81302	451
81303	451
81304	451
81400	451
81401	451
81402	451
81403	451
81404	451
81500	451
81501	451
81502	451
81503	451
81504	451
81700	454
81701	454
81702	454
81703	454
81704	454
81900	454
81901	454
81902	454
81903	454
81904	454
82100	454
82101	454
82102	454
82103	454
82104	454
82201	432
82201SS	432
82203	432
82203SS	432
82204	432
82204SS	432
82205	432
82205SS	432
82210	432
82210SS	432
82211	432
82211SS	432
82212	432
82212SS	432
82213	432
82213SS	432
82222	432
82222SS	432
82301	432
82303	432
82304	432
82305	432
82310	432
82311	432
82312	432
82313	432
82322	432
82401	435
82401L	435
82401SS	435
82403	435
82403L	435
82403SS	435
82404	435
82404H	447
82404L	435
82404LH	447
82404SS	435
82405	435
82405L	435
82405SS	435
82410	435
82410L	435
82410SS	435
82411	435
82411L	435
82411SS	435
82412	435
82412H	447
82412L	435
82412LH	447
82412SS	435
82413	435
82413L	435
82413SS	435
82422	435
82422L	435
82422SS	435
82501	435
82501L	435
82501SS	435
82503	435
82503L	435
82503SS	435
82504	435
82504H	447
82504L	435
82504SS	435
82505	435
82505L	435
82505SS	435
82510	435
82510L	435
82510SS	435
82511	435
82511L	435
82511SS	435
82512	435
82512H	447
82512L	435
82512SS	435
82513	435
82513L	435
82513SS	435
82522	435
82522L	435
82522SS	435
82601	435
82603	435
82604	435
82604H	447
82605	435
82610	435
82611	435
82612	435
82612H	447
82613	435
82622	435
82701	435
82703	435
82704	435
82704H	447
82705	435
82710	435
82711	435
82712	435
82712H	447
82713	435
82722	435
82801	438
82801SS	438
82802	438
82802SS	438
82804	438
82804SS	438
82813	438
82813SS	438
82901	438
82902	438
82904	438
82913	438
83001	441
83001L	441
83001SS	441
83002	441
83002H	447
83002L	441
83002LH	447
83002SS	441
83004	441
83004H	447
83004L	441
83004LH	447
83004SS	441
83013	441
83013L	441
83013SS	441
83101	441
83101L	441
83101SS	441
83102	441
83102H	447
83102L	441
83102LH	447
83102SS	441
83104	441
83104H	447
83104L	441
83104LH	447
83104SS	441
83113	441
83113L	441
83113SS	441
83201	441
83202	441
83202H	447
83204	441
83204H	447
83213	441
83301	441
83302	441
83302H	447
83304	441
83304H	447
83313	441
83400	443
83400SS	443
83401	443
83401SS	443
83402	443
83402SS	443
83500	443
83501	443
83502	443
83600	445
83600L	445
83600SS	445
83601	445
83601L	445
83601SS	445
83602	445
83602L	445
83602SS	445
83700	445

Article -Nr.	Page
83700L	445
83700SS	445
83701	445
83701L	445
83701SS	445
83702	445
83702L	445
83702SS	445
83800	445
83801	445
83802	445
83900	445
83901	445
83902	445
84504	449
84504L	449
84504SS	449
84604	449
84604L	449
84604SS	449
84704	449
84804	449
84904	449
84904L	449
84904SS	449
85004	449
85004L	449
85004SS	449
85104	449
85204	449
86000	452
86001	452
86002	452
86003	452
86004	452
87000	452
87001	452
87002	452
87003	452
87004	452
89001	431/432/437/438/443
89002	431/432/437/438/443
89003	431/432/437/438
89004	431/432
89005	431/432
89007	432
89801	451/452
89802	451/452
89803	451/452
89804	451/452
89805	451/452
90101	457
90101Z	457
90102	457
90102Z	457
90103	457
90103Z	457
90201	457
90201Z	457
90202	457
90202Z	457
90203	457
90203Z	457
90301	457
90301H	457
90301Z	457
90301ZH	457
90302	457
90302H	457
90302Z	457
90302ZH	457
90303	457
90303H	457
90303Z	457
90303ZH	457
90401	457
90401Z	457
90402	457
90402Z	457
90403	457
90403Z	457
90501	457
90501Z	457
90502	457
90502Z	457
90503	457
90503Z	457
90601	457
90601H	457
90601Z	457
90601ZH	457
90602	457
90602H	457
90602Z	457
90602ZH	457
90603	457
90603H	457
90603Z	457
90603ZH	457
90701	457
90701Z	457
90702	457
90702Z	457
90703	457
90703Z	457
90801	457
90801H	457
90801Z	457
90801ZH	457
90802	457
90802H	457
90802Z	457
90802ZH	457
90803	457
90803H	457
90803Z	457
90803ZH	457
90810PH	459
90901	457
90901H	457
90901Z	457
90901ZH	457
90902	457
90902H	457
90902Z	457
90902ZH	457
90903	457
90903H	457
90903Z	457
90903ZH	457
91001	461
91001Z	461
91002	461
91002Z	461
91003	461
91003Z	461
91101	461
91101H	461
91101Z	461
91101ZH	461
91102	461
91102H	461
91102Z	461
91102ZH	461
91103	461
91103H	461
91103Z	461
91103ZH	461
91201	461
91201H	461
91201Z	461
91201ZH	461
91202	461
91202H	461
91202Z	461
91202ZH	461
91203	461
91203H	461
91203Z	461
91203ZH	461
91301	461
91301H	461
91301Z	461
91301ZH	461
91302	461
91302H	461
91302Z	461
91302ZH	461
91303	461
91303H	461
91303Z	461
91303ZH	461
91401	461
91401H	461
91401Z	461
91401ZH	461
91402	461
91402H	461
91402Z	461
91402ZH	461
91403	461
91403H	461
91403Z	461
91403ZH	461
91501	461
91501Z	461
91502	461
91502Z	461
91503	461
91503Z	461
91601	461
91601H	461
91601Z	461
91601ZH	461
91602	461
91602H	461
91602Z	461
91602ZH	461
91603	461
91603H	461
91603Z	461
91603ZH	461
91701	461
91701H	461
91701Z	461
91701ZH	461
91702	461
91702H	461
91702Z	461
91702ZH	461
91703	461
91703H	461
91703Z	461
91703ZH	461
91801	461
91801Z	461
91802	461
91802Z	461
91803	461
91803Z	461
91901	469
91902	469
91903	469
92001	469
92002	469
92003	469
92101	469
92102	469
92103	469
92201	469
92202	469
92203	469
92301	469
92302	469
92303	469
92401	469
92402	469
92403	469
92501	469
92502	469
92503	469
92601	469
92602	469
92603	469
92701	469
92702	469
92703	469
92801	470
92802	470
92803	470
92901	470
92902	470
92903	470
93001	470
93002	470
93003	470
93102	467
93102Z	467
93103	467
93103Z	467
93152	467
93152Z	467
93153	467
93153Z	467
93202	467
93202Z	467
93203	467
93203Z	467
93252	467
93252Z	467
93253	467
93253Z	467
93302	467
93302Z	467
93303	467
93303Z	467
93352	467
93352Z	467
93353	467
93353Z	467
93401	475
93402	475
93403	475
93501	475
93502	475
93503	475
93601	475
93602	475
93603	475
93701	475
93702	475
93703	475
93801	475
93802	475
93803	475
93901	475
93902	475
93903	475
94301H	463
94301ZH	463
94302H	463
94302ZH	463
94303H	463
94303ZH	463
94351H	463
94351ZH	463
94352H	463
94352ZH	463
94353H	463
94353ZH	463
94401H	463
94401ZH	463
94402H	463
94402ZH	463
94403H	463
94403ZH	463
94451H	463
94451ZH	463
94452H	463
94452ZH	463
94453H	463
94453ZH	463
94501H	463
94501ZH	463
94502H	463
94502ZH	463
94503H	463
94503ZH	463
94551H	463
94551ZH	463
94552H	463
94552ZH	463
94553H	463
94553ZH	463
94601H	463
94601ZH	463
94602H	463
94602ZH	463
94603H	463
94603ZH	463
94651H	463
94651ZH	463
94652H	463
94652ZH	463
94653H	463
94653ZH	463
94701H	463
94701ZH	463
94702H	463
94702ZH	463
94703H	463
94703ZH	463

Index

Article -Nr.	Page
94751H	463
94751ZH	463
94752H	463
94752ZH	463
94753H	463
94753ZH	463
94801H	465
94801ZH	465
94802H	465
94802ZH	465
94803H	465
94803ZH	465
94851H	465
94851ZH	465
94852H	465
94852ZH	465
94853H	465
94853ZH	465
94901H	465
94901ZH	465
94902H	465
94902ZH	465
94903H	465
94903ZH	465
94951H	465
94951ZH	465
94952H	465
94952ZH	465
94953H	465
94953ZH	465
95001H	465
95001ZH	465
95002H	465
95002ZH	465
95003H	465
95003ZH	465
95051H	465
95051ZH	465
95052H	465
95052ZH	465
95053H	465
95053ZH	465
95101H	465
95101ZH	465
95102H	465
95102ZH	465
95103H	465
95103ZH	465
95151H	465
95151ZH	465
95152H	465
95152ZH	465
95153H	465
95153ZH	465
95201H	465
95201ZH	465
95202H	465
95202ZH	465
95203H	465
95203ZH	465
95251H	465
95251ZH	465
95252H	465
95252ZH	465
95253H	465
95253ZH	465
95301	459
95301Z	459
95302	459
95302Z	459
95303	459
95303Z	459
95401	459
95401H	459
95401Z	459
95401ZH	459
95402	459
95402H	459
95402Z	459
95402ZH	459
95403	459
95403H	459
95403Z	459
95403ZH	459
95410PH	459
95501	459
95501H	459
95501Z	459
95501ZH	459
95502	459
95502H	459
95502Z	459
95502ZH	459
95503	459
95503H	459
95503Z	459
95503ZH	459
95601	459
95601H	459
95601Z	459
95601ZH	459
95602	459
95602H	459
95602Z	459
95602ZH	459
95603	459
95603H	459
95603Z	459
95603ZH	459
95701	459
95701H	459
95701Z	459
95701ZH	459
95702	459
95702H	459
95702Z	459
95702ZH	459
95703	459
95703H	459
95703Z	459
95703ZH	459
95710PH	459
95801H	467
95801ZH	467
95802H	467
95802ZH	467
95803H	467
95803ZH	467
95851H	467
95851ZH	467
95852H	467
95852ZH	467
95853H	467
95853ZH	467
95901H	467
95901ZH	467
95902H	467
95902ZH	467
95903H	467
95903ZH	467
95951H	467
95951ZH	467
95952H	467
95952ZH	467
95953H	467
95953ZH	467
96001H	479
96001ZH	479
96002H	479
96002ZH	479
96101H	479
96101ZH	479
96102H	479
96102ZH	479
96201H	479
96201ZH	479
96202H	479
96202ZH	479
96301H	479
96301ZH	479
96302H	479
96302ZH	479
96401H	479
96401ZH	479
96402H	479
96402ZH	479
96501H	479
96501ZH	479
96502H	479
96502ZH	479
96601H	479
96601ZH	479
96602H	479
96602ZH	479
96701H	479
96701ZH	479
96702H	479
96702ZH	479
96801H	479
96801ZH	479
96802H	479
96802ZH	479
96901H	479
96901ZH	479
96902H	479
96902ZH	479
97001H	479
97001ZH	479
97002H	479
97002ZH	479
97101H	479
97101ZH	479
97102H	479
97102ZH	479
97201	469
97202	469
97203	469
97301	469
97302	469
97303	469
97401	469
97402	469
97403	469
97501	470
97502	470
97503	470
97601	470
97602	470
97603	470
97702	470
97703	470
97704	470
97801	470
97802	470
97803	470
97902	470
97903	470
97904	470
98003	470
98004	470
98005	470
98102H	467
98102ZH	467
98103H	467
98103ZH	467
98152H	467
98152ZH	467
98153H	467
98153ZH	467
98202H	467
98202ZH	467
98203H	467
98203ZH	467
98252H	467
98252ZH	467
98253H	467
98253ZH	467
98302H	467
98302ZH	467
98303H	467
98303ZH	467
98352H	467
98352ZH	467
98353H	467
98353ZH	467
98501	472
98502	472
98503	472
98504	472
98505	472
98506	472
98601	472
98602	472
98603	472
98604	472
98605	472
98606	472
98701	472
98702	472
98703	472
98704	472
98705	472
98706	472
98801	472
98802	472
98803	472
98804	472
98805	472
98806	472
98901	473
98902	473
98903	473
98904	473
98905	473
98906	473
99001	473
99002	473
99003	473
99004	473
99005	473
99006	473
99101	473
99102	473
99103	473
99104	473
99105	473
99106	473
99201	477
99202	477
99203	477
99204	477
99205	477
99206	477
99301	477
99302	477
99303	477
99304	477
99305	477
99306	477
99601	456
99602	456
99603	456
99604	458/460
99605	458/460
99606	460
99607	462
99608	464/466
99801	456
99802	456/ 458/460/468/475
99804	456/458/460/462/464 466/468/471/475/477/478
99805	456/458/460/462/464 466/468/471/475/477/478
99806	460/462/464/466/468 471/475/477/478
99807	468/475/478

This catalogue presents and includes the latest generations of products shown in earlier publications and it relates to the current production.

Other information, which may be different from that contained in this catalogue has to be considered invalid.

Movex® S.p.A. reserves the right to carry out modifications rendered necessary by the technical evolution of the products.

© Copyright Movex® S.p.A. 2019

The contents of this catalogue are the copyright of Movex® S.p.A. and may not be reproduced (even extracts) unless written permission is granted.

Every care has been taken to ensure the accuracy of the information contained in this publication but no liability can be accepted for any error or omissions.

Catalogue No. M999511

Movex®

2019

Movex®

Global Thinking, Local Acting.

WE CREATE SOLUTIONS

Movex designs and manufactures high quality components for the food, beverage, packaging, automotive and automation industries.

Movex meets your needs for standard and custom products in a dynamic and responsive way ensuring always the best performance.

Movex S.p.A.

Via Industria, 22
24060 Castelli Calepio (BG)

P +39 035 8359711
F +39 035 4420873

info@movexii.com
movexii.com

Movex around the world

Movex GmbH
P +49-6204-9375-0

Movex Brasil Ltda
P +55-15-3141-2550

Movex France
P +33-0640592049

Movex AG India
P +91-120-4159660-62

Movex UK Ltd.
P +44-77-20678442

Movex Nederland
P +31-630-994850

Movex USA Inc.
P +1-919-274-5477

Movex SA de CV
P +52-1-3318458187